MIAMI-DADE COUNTY
BUILDING CODE COMPLIANCE OFFICE (BCCO)
PRODUCT CONTROL DIVISION

MIAMI-DADE COUNTY, FLORIDA
METRO-DADE FLAGLER BUILDING
140 WEST FLAGLER STREET, SUITE 1603
MIAMI, FLORIDA 33130-1563
(305) 375-2901 FAX (305) 372-6339
www.miamidade.gov/buildingcode

NOTICE OF ACCEPTANCE (NOA)

Kawneer Company, Inc.
555 Guthridge Court
Norcross, GA 30092

SCOPE:

This NOA is being issued under the applicable rules and regulations governing the use of construction materials. The documentation submitted has been reviewed by Miami-Dade County Product Control Division and accepted by the Board of Rules and Appeals (BORA) to be used in Miami Dade County and other areas where allowed by the Authority Having Jurisdiction (AHJ).

This NOA shall not be valid after the expiration date stated below. The Miami-Dade County Product Control Division (In Miami Dade County) and/or the AHJ (in areas other than Miami Dade County) reserve the right to have this product or material tested for quality assurance purposes. If this product or material fails to perform in the accepted manner, the manufacturer will incur the expense of such testing and the AHJ may immediately revoke, modify, or suspend the use of such product or material within their jurisdiction. BORA reserves the right to revoke this acceptance, if it is determined by Miami-Dade County Product Control Division that this product or material fails to meet the requirements of the applicable building code. This product is approved as described herein, and has been designed to comply with the Florida Building Code, including the High Velocity Hurricane Zone.

DESCRIPTION: Series "7225/8225TL" Aluminum Fixed over Project-Out Window – S.M.I.

APPROVAL DOCUMENT: Drawing No. **1416**, titled "7225/8225TL Fixed/Project-Out Window (Small Missile Impact)", sheets 1 through 4 of 4, dated 06/20/05 with revision B1 dated 09/01/10, prepared by W.W. Schaefer Engineering & Consulting, P.A., signed and sealed by Warren W. Schaefer, P.E., bearing the Miami-Dade County Product Control Revision stamp with the Notice of Acceptance number and expiration date by the Miami-Dade County Product Control Division.

MISSILE IMPACT RATING: Small Missile Impact Resistant

LABELING: Each unit shall bear a permanent label with the manufacturer's name or logo, city, state and following statement: "Miami-Dade County Product Control Approved", unless otherwise noted herein.

RENEWAL of this NOA shall be considered after a renewal application has been filed and there has been no change in the applicable building code negatively affecting the performance of this product.

TERMINATION of this NOA will occur after the expiration date or if there has been a revision or change in the materials, use, and/or manufacture of the product or process. Misuse of this NOA as an endorsement of any product, for sales, advertising or any other purposes shall automatically terminate this NOA. Failure to comply with any section of this NOA shall be cause for termination and removal of NOA.

ADVERTISEMENT: The NOA number preceded by the words Miami-Dade County, Florida, and followed by the expiration date may be displayed in advertising literature. If any portion of the NOA is displayed, then it shall be done in its entirety.

INSPECTION: A copy of this entire NOA shall be provided to the user by the manufacturer or its distributors and shall be available for inspection at the job site at the request of the Building Official.

This NOA **revises and renews NOA # 08-0425.04** and consists of this page 1 and evidence pages E-1 and E-2, as well as approval document mentioned above.

The submitted documentation was reviewed by **Manuel Perez, P.E.**

MIAMI-DADE COUNTY APPROVED

Kawneer Company, Inc.

NOTICE OF ACCEPTANCE: EVIDENCE SUBMITTED

A. DRAWINGS

1. Manufacturer's die drawings and sections.
2. Drawing No **1416**, Sheets 1 through 4 of 4, titled "7225/8225TL Fixed/Project-Out Window (Small Missile Impact)", dated 06/20/05 with revision B1 dated 09/01/10, prepared by W.W. Schaefer Engineering & Consulting, P.A., signed and sealed by Warren W. Schaefer, P.E.

B. TESTS

1. Test reports on: 1) Air Infiltration Test, per FBC, TAS 202-94
   2) Uniform Static Air Pressure Test, Loading per FBC, TAS 202-94
   3) Water Resistance Test, per FBC, TAS 202-94
   4) Small Missile Impact Test per FBC, TAS 201-94
   5) Large Missile Impact Test per FBC, TAS 201-94
   6) Cyclic Wind Pressure Loading per FBC, TAS 203-94
   7) Forced Entry Test, per FBC 2411 3.2.1 and TAS 202-94

   along with installation diagram of an aluminum fixed/over project-out window, prepared by Hurricane Test Laboratory, LLC, Report No. **HTL-G049-0102-05**, dated 01/12-5/25/05, signed and sealed by Vinu J, Abraham, P.E.
   (Submitted under previous NOA #08-0425.04)
2. Test reports on: 1) Air Infiltration Test, per FBC, TAS 202-94
   2) Uniform Static Air Pressure Test, Loading per FBC, TAS 202-94
   3) Water Resistance Test, per FBC, TAS 202-94
   4) Small Missile Impact Test per FBC, TAS 201-94
   5) Cyclic Wind Pressure Loading per FBC, TAS 203-94

   along with installation diagram of an aluminum fixed/over project-out window, prepared by Hurricane Test Laboratory, LLC, Report No **HTL-G049-0403-05**, dated 01/12-5/25/05, signed and sealed by Vinu J, Abraham, P.E.
   (Submitted under previous NOA #08-0425.04)
3. Test reports on: 1) Uniform Static Air Pressure Test, Loading per PA 202-94
   2) Small Missile Impact Test per FBC, TAS 201-94
   3) Cyclic Wind Pressure Loading per FBC, TAS 203-94

   along with installation diagram of an aluminum fixed/over project-out window, prepared by Hurricane Test Laboratory, LLC, Report No **HTL-G049-0505-05**, dated 01/12-5/25/05, signed and sealed by Vinu J, Abraham, P.E.
   (Submitted under previous NOA #08-0425.04)

Manuel Perez, P.E.
Product Control Examiner
NOA No. 10-0908.09
Expiration Date: December 01, 2015
Approval Date: December 16, 2010

NOTICE OF ACCEPTANCE: EVIDENCE SUBMITTED

C. CALCULATIONS:

1. Anchor verification calculations and structural analysis, complying with FBC-2007, prepared by W.W. Schaefer Engineering & Consulting P.A., dated 06/20/05, updated on 09/01/10, signed and sealed by Warren W. Schaefer, P.E.
   Complies with ASTM E1300-04

D. QUALITY ASSURANCE

1. Miami Dade Building Code Compliance Office (BCCO).

E. MATERIAL CERTIFICATIONS

1. Notice of Acceptance No. **06-0216.06** issued to **Solutia, Inc.** for their "**Saflex IIIG Clear or colored Interlayer**" dated 05/04/06, expiring on 05/21/11.
2. Notice of Acceptance No. **09-0312.02** issued to **E.I. DuPont DeNemours & Co., Inc.** for their "**DuPont Butacite® PVB Interlayer**" dated 05/13/09, expiring on 12/11/10.

F. STATEMENTS

1. Statement letter of conformance, dated September 01, 2010, signed and sealed by Warren W. Schaefer, P.E.
2. Statement letter of no financial interest, dated September 01, 2010, signed and sealed by Warren W. Schaefer, P.E.
3. Laboratory compliance letter for Test Reports No. **HTL-G049-0102-05**, **HTL-G049-0403-05** and **HTL-G049-0505-05**, issued by Hurricane Test Laboratory, Inc., dated July 07, 2005, signed and sealed by Vinu J. Abraham, P.E.

G. OTHERS

1. Notice of Acceptance No. **08-0425.04**, issued to Kawneer Company, Inc. for their Series 7225/8225TL Aluminum Fixed over Project-Out Window – S.M.I., approved on 01/28/09 and expiring on 12/01/10.

Manuel Perez, P.E.
Product Control Examiner
NOA No. 10-0908.09
Expiration Date: December 01, 2015
Approval Date: December 16, 2010

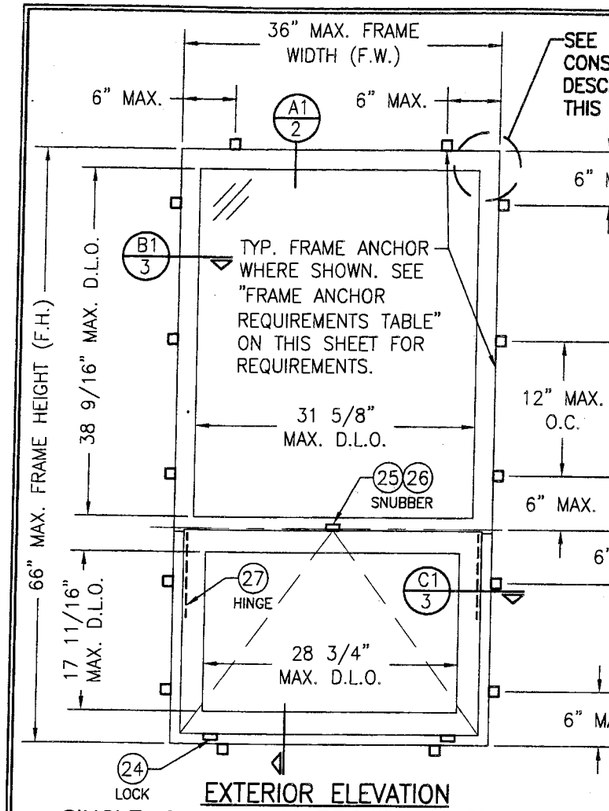

EXTERIOR ELEVATION
SINGLE FIXED OVER PROJECT-OUT WINDOW
(CLIP MOUNT CONDITION)
SCALE: 3/4"=1'-0"

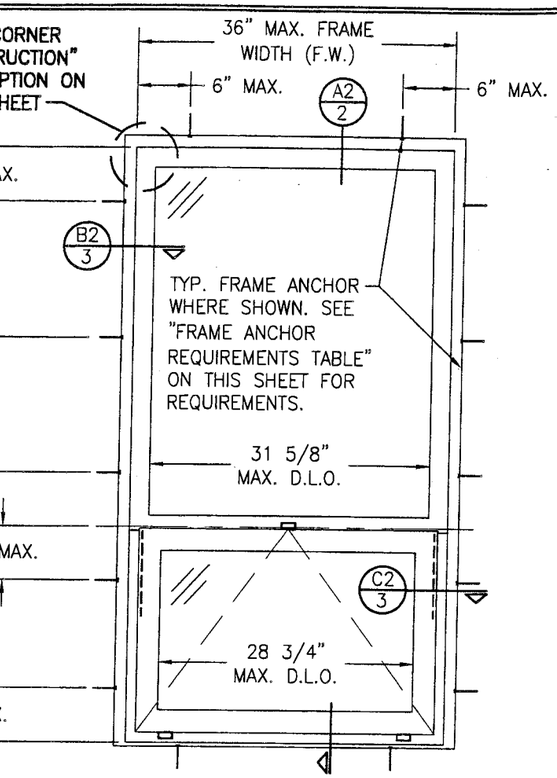

EXTERIOR ELEVATION
SINGLE FIXED OVER PROJECT-OUT WINDOW
(SHEAR SCREW MOUNT CONDITION)
SCALE: 3/4"=1'-0"

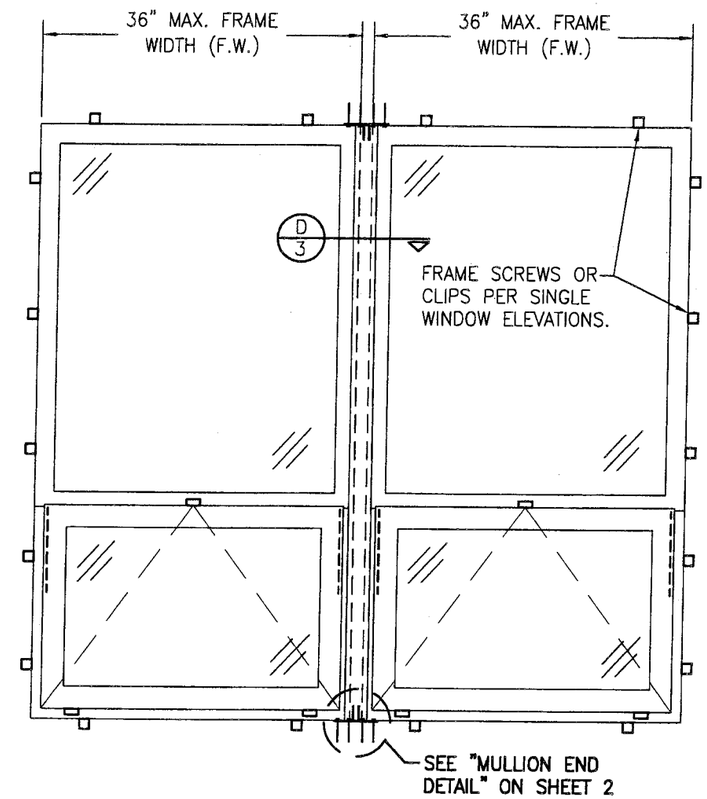

EXTERIOR ELEVATION
MULTIPLE FIXED OVER PROJECT-OUT WINDOWS
(CLIP MOUNT CONDITION)
SCALE: 3/4"=1'-0"
(FOR DETAIL NOT SHOWN, SEE SINGLE WINDOW ELEVATIONS.)
DOUBLE WINDOW SHOWN. ANY NUMBER OF WINDOWS MAY BE COMBINED HORIZONTALLY IN ANY OPENING.

GENERAL NOTES:

1. THESE WINDOW SYSTEMS HAVE BEEN TESTED, ANALYZED & APPROVED FOR DESIGN PRESSURES NOT TO EXCEED THOSE SHOWN IN THE "ALLOWABLE DESIGN PRESSURE TABLE(S).
2. OPENINGS, BUCKING & BUCKING FASTENERS MUST BE PROPERLY DESIGNED & INSTALLED TO TRANSFER WIND LOADS TO THE STRUCTURE.
3. ALL HARDWARE & FASTENERS SHALL BE IN ACCORDANCE WITH THESE DRAWINGS & SHALL NOT VARY UNLESS SPECIFICALLY MENTIONED ON THE DRAWINGS. SPECIFIED ANCHOR EMBED TO BASE MATERIAL SHALL BE BEYOND WALL FINISH OR STUCCO.
4. THE DETAILS & SPECIFICATIONS SHOWN HEREIN REPRESENT THE PRODUCTS TESTED & PROPOSED FOR WATER, AIR, IMPACT, CYCLIC & UNIFORM STATIC AIR PRESSURE TESTING IN CONFORMANCE WITH THE FLORIDA BUILDING CODE PROTOCALS TAS-201, 202 & 203 FOR SMALL MISSILE IMPACT WINDOWS.
5. THESE WINDOW SYSTEMS HAVE BEEN DESIGNED IN ACCORDANCE WITH AND MEET THE REQUIREMENTS OF THE FLORIDA BUILDING CODE (FBC) INCLUDING HIGH VELOCITY HURRICANE ZONES (HVHZ).
6. WHEN GLAZED FOR SMALL MISSILE IMPACT, THESE WINDOWS MAY NOT BE INSTALLED AT ELEVATIONS BELOW 30 FT. ABOVE GRADE WITHOUT AN APPROVED SHUTTER.
7. ALL ANCHORS SECURING WINDOW FRAME TO PRESSURE TREATED BUCKS OR WOOD FRAMING SHALL BE CAPABLE OF RESISTING CORROSION CAUSED BY THE PRESSURE TREATING CHEMICALS IN THE WOOD.
8. DETERMINE THE POSITIVE & NEGATIVE DESIGN LOADS TO USE WHEN REFERENCING THESE DOCUMENTS IN ACCORDANCE WITH THE GOVERNING CODE AND GOVERNING WIND VELOCITY. FOR WIND LOAD CALCULATIONS IN ACCORDANCE WITH THE FLORIDA BUILDING CODE, A DIRECTIONALITY FACTOR OF Kd = 0.85 MAY BE APPLIED PER THE ASCE-7 STANDARD.
9. NO INCREASE IN ALLOWABLE STRESS HAS BEEN USED IN THE CERTIFICATION OF THIS PRODUCT. WIND LOAD DURATION FACTOR Cd = 1.6 WAS USED FOR WOOD SCREW ANALYSIS ONLY.
10. MATERIALS, INCLUDING BUT NOT LIMITED TO STEEL SCREWS, THAT COME INTO CONTACT WITH OTHER DISSIMILAR MATERIALS SHALL MEET THE REQUIREMENTS OF FLORIDA BUILDING CODE CHAPTER 20.

ALLOWABLE DESIGN PRESSURE
+100/-130 PSF
SMALL MISSILE IMPACT RATED

FRAME ANCHOR REQUIREMENTS TABLE

CLIP & FRAME SCREWS

OPENING TYPE (SUBSTRATE)	FRAME TO OPENING FASTENER TYPE	MINIMUM EMBED	MINIMUM EDGE DIST.
MIN. 2X4 WOOD FRAME OR BUCK (MIN. GR. 3 & G=0.55)	NO. 12 SMS OR WOOD SCREW	1 1/4"	3/4"
MIN. 18 GA. 33 KSI METAL STUD	NO. 12 GR. 5 SELF TAP/DRILL SCREW	FULL	1/2"
MIN. 1/8" THK A36 STEEL	NO. 12 GR. 5 SELF TAP/DRILL SCREW	FULL	1/2"
MIN. C-90 CMU	(1) 1/4" CONCRETE SCREW	1 1/4"	2"
MIN. 2500 PSI CONCRETE	(1) 1/4" CONCRETE SCREW	1 1/2"	2"

(1) CONCRETE SCREWS SHALL BE ELCO ULTRACONS, ELCO CRETE-FLEX, ITW RAMSET/RED HEAD TAPCONS OR HILTI KWIK-CON II (HARDENED STEEL OR S.S.).

CORNER CONSTRUCTION

JAMB CORNERS:
COPED, SECURED WITH TWO (2) NO. 8 X 1 1/4" S.S. SCREWS PER CORNER AND SEALED WITH TREMCO-TREMSIL 600 SEALANT.

SASH CORNERS:
COPED, SECURED WITH TWO (2) NO. 8 X 1 1/4" S.S. SCREWS PER CORNER AND SEALED WITH TREMCO-TREMSIL 600 SEALANT.

PRODUCT REVISED
as complying with the Florida Building Code
Acceptance No 10-0908.09
Expiration Date DEC. 1, 2015
By Manuel Perez
Miami Dade Product Control Division

WARREN W. SCHAEFER LICENSE NO. 44135 STATE OF FLORIDA PROFESSIONAL ENGINEER

NO.	REVISION DESCRIPTION	BY	DATE
A1	UPDATE FOR CODE COMPLIANCE	W.R.M.	04/16/08
B1	UPDATE TO CURRENT STANDARDS	W.W.S.	09/01/10

DRAWN BY: M.S.J | CHECKED BY: W.W.S.
PLOT: 1=16 | DATE: 06/20/05

DRAWING TITLE: 7225/8225TL FIXED/PROJECT-OUT WINDOW (SMALL MISSILE IMPACT)

MANUFACTURER: KAWNEER COMPANY, INC.
555 GUTHRIDGE COURT
NORCROSS, GA 30092
770-449-5555

CONSULTANTS: W. W. SCHAEFER ENGINEERING & CONSULTING, P.A.
8895 N. MILITARY TRAIL; SUITE C-204
PALM BEACH GARDENS, FL 33410
PHONE: 561-775-4902 FAX: 561-775-4903

CERTIFICATION: SEP 01 2010
WARREN W. SCHAEFER, P.E.
P.E. NO. 44135

DRAWING NO. 1416 | REV. B
SHEET NO. 1 OF 4

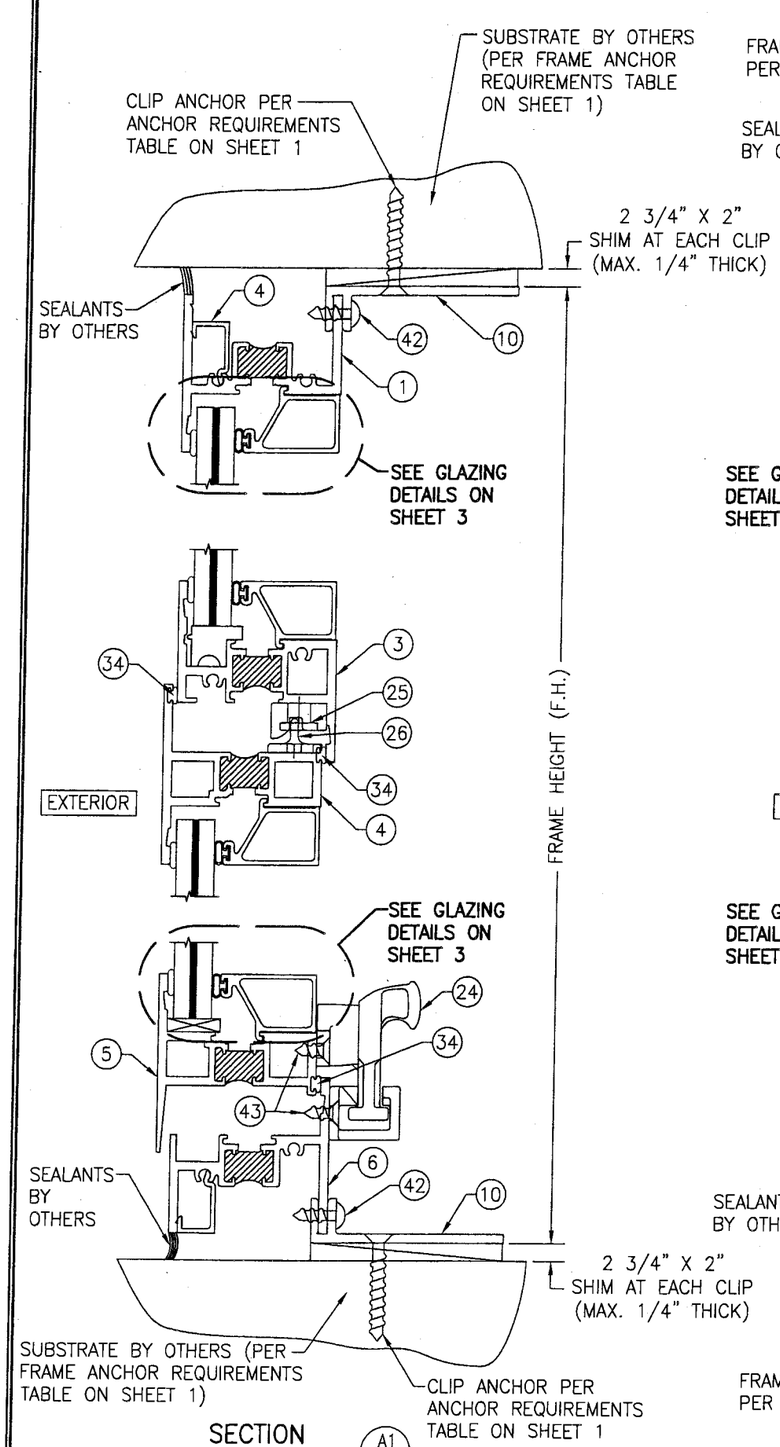

SECTION A1/2

SCALE: 1/2 FULL

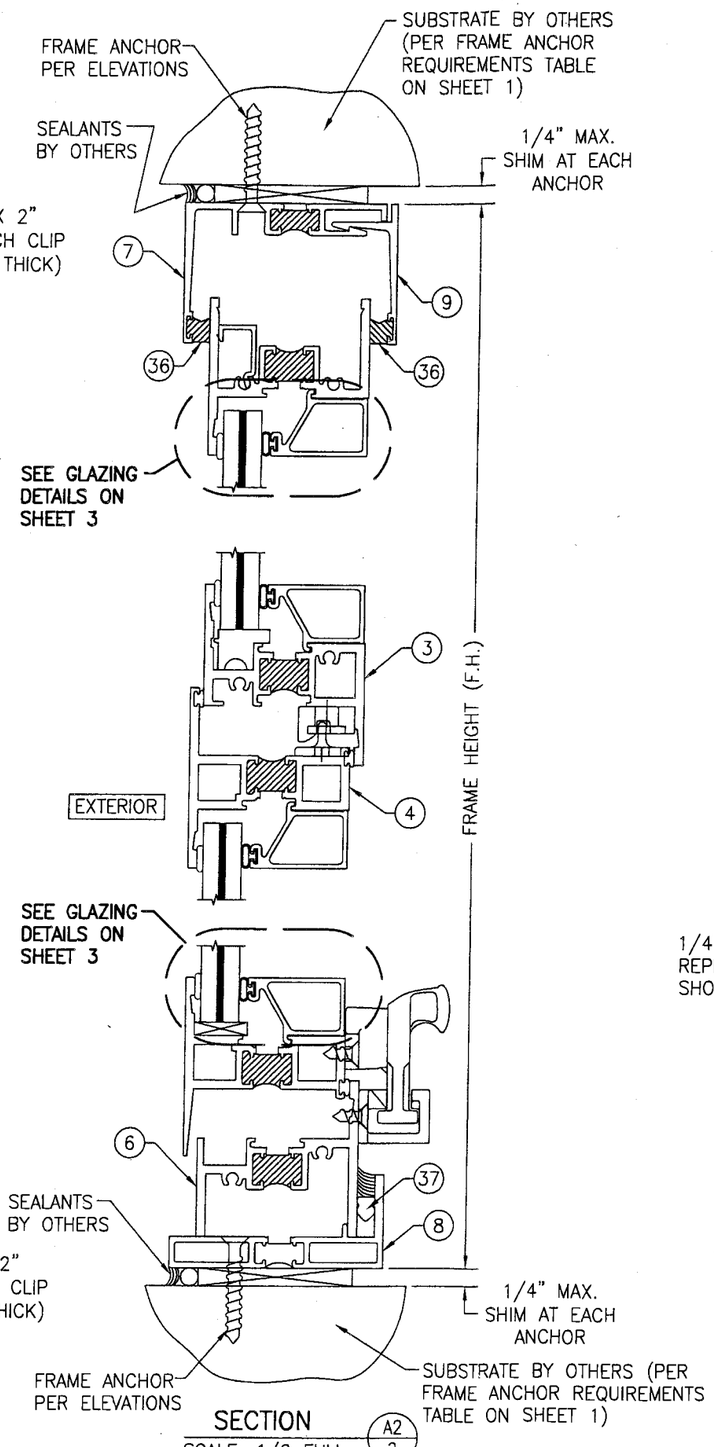

SECTION A2/2

SCALE: 1/2 FULL

FOR DETAIL NOT SHOWN, SEE SECTION A1

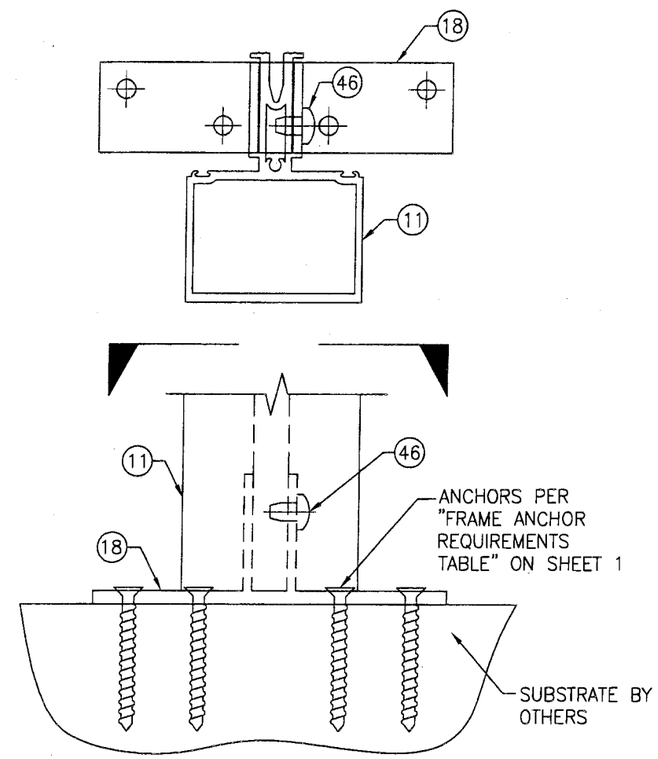

MULLION END DETAIL

NOT TO SCALE
(WINDOW FRAMES NOT SHOWN FOR CLARITY)

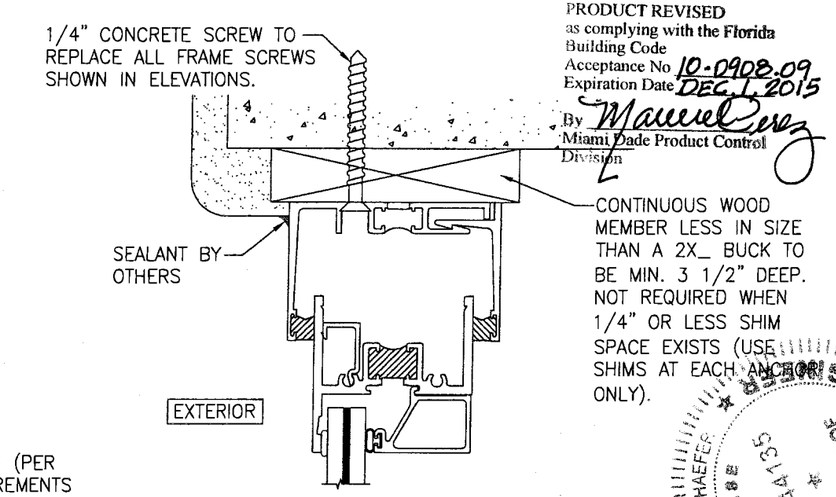

PRODUCT REVISED
as complying with the Florida Building Code
Acceptance No 10-0908.09
Expiration Date DEC 1, 2015
By Manuel Perez
Miami Dade Product Control Division

OPTIONAL DIRECT MOUNT DETAIL

FOR DETAIL NOT SHOWN, SEE OTHER SECTIONS
(HEAD SECTION SHOWN, SIDES AND SILL SIMILAR)

DRAWN BY: W.S.J	CHECKED BY: W.W.S.
PLOT: 1=2	DATE: 06/20/05

NO.	REVISION DESCRIPTION	BY	DATE

DRAWING TITLE
7225/8225TL FIXED/PROJECT-OUT WINDOW (SMALL MISSILE IMPACT)

MANUFACTURER
KAWNEER COMPANY, INC.
555 GUTHRIDGE COURT
NORCROSS, GA 30092
770-449-5555

CONSULTANTS
W. W. SCHAEFER ENGINEERING & CONSULTING, P.A.
8895 N. MILITARY TRAIL; SUITE C-204
PALM BEACH GARDENS, FL 33410
PHONE: 561-775-4902 FAX: 561-775-4903

CERTIFICATION
WARREN W. SCHAEFER, P.E.
P.E. NO. 44135

DRAWING NO. 1416 REV. B

SHEET NO. 2 OF 4

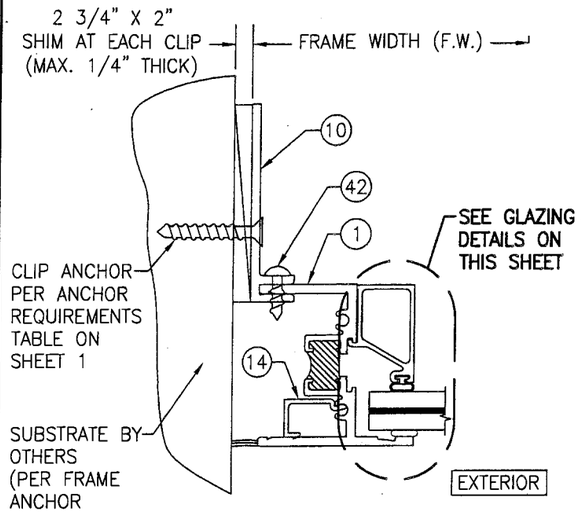

SECTION B1/3
SCALE: 1/2 FULL

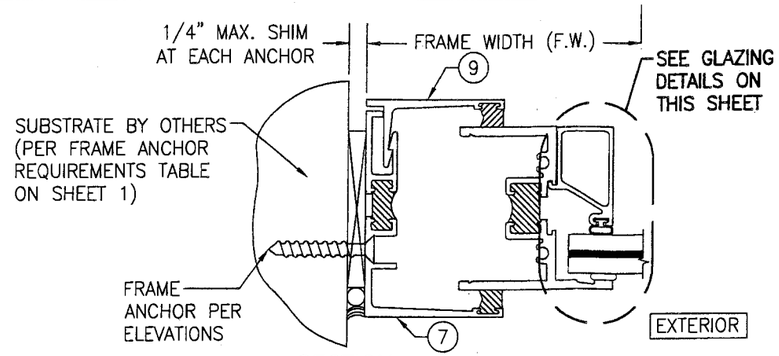

SECTION B2/3
SCALE: 1/2 FULL

FOR DETAIL NOT SHOWN, SEE SECTION B1/3

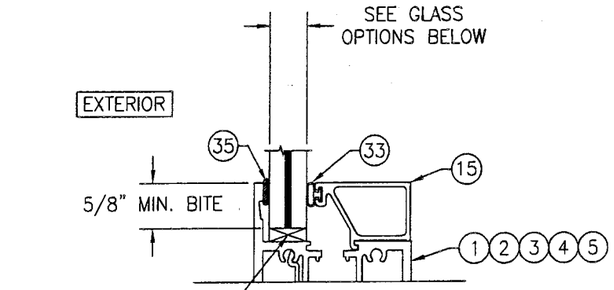

NON-I.G. GLAZING DETAIL
SCALE: 1/2 FULL

GLASS OPTION 1: 9/16" THICK SOLUTIA SAFLEX LAMINATED GLASS (1/4" H.S./0.060 PVB/1/4" H.S.)

GLASS OPTION 2: 9/16" THICK DUPONT BUTACITE LAMINATED GLASS (1/4" H.S./0.060 PVB/1/4" H.S.)

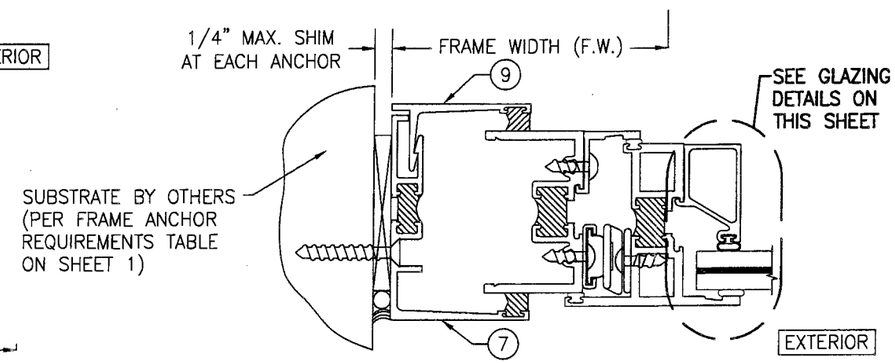

SECTION C2/3
SCALE: 1/2 FULL

FOR DETAIL NOT SHOWN, SEE SECTION C1/3

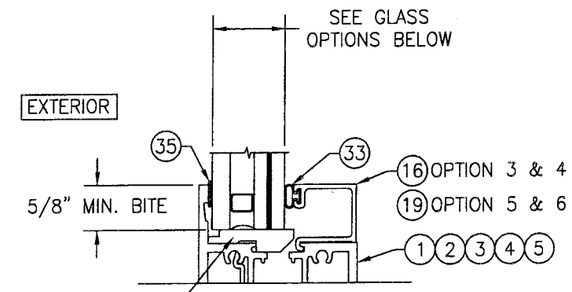

I.G. GLAZING DETAIL
SCALE: 1/2 FULL

GLASS OPTION 3: 1" THICK LAMINATED I.G. SOLUTIA SAFLEX GLASS WITH 3/16" THICK TEMPERED OUTER PANE, 3/8" AIR SPACER AND 9/16" THICK LAMINATED INNER GLASS (3/16" H.S./0.03 SAFLEX IIIG PVB/3/16" H.S.)

GLASS OPTION 4: 1" THICK LAMINATED I.G. DUPONT BUTACITE GLASS WITH 3/16" THICK TEMPERED OUTER PANE, 3/8" AIR SPACER AND 9/16" THICK LAMINATED INNER GLASS (3/16" H.S./0.03 BUTACITE PVB/3/16" H.S.)

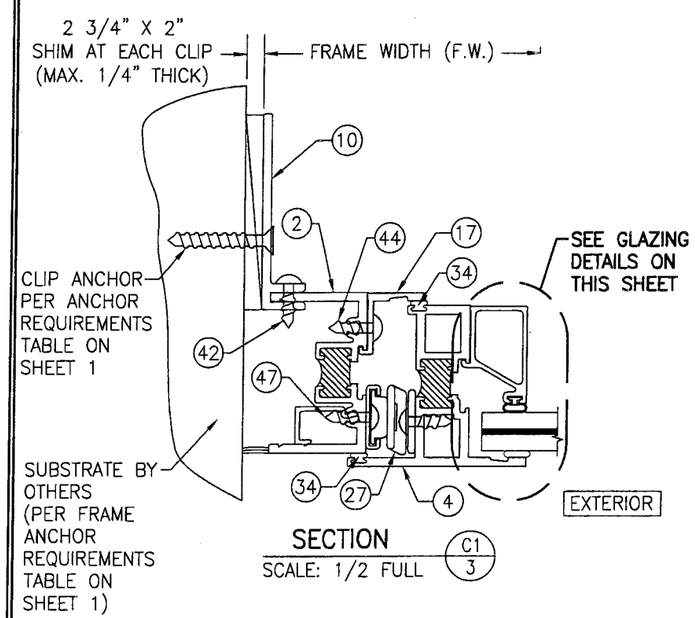

SECTION C1/3
SCALE: 1/2 FULL

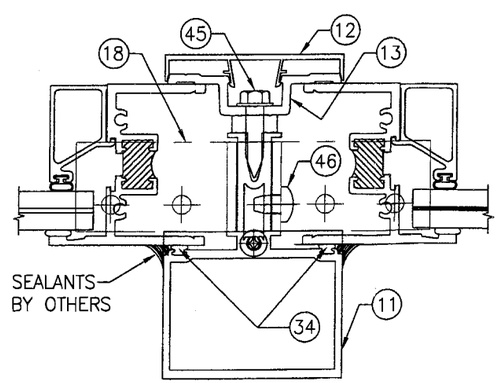

SECTION D/3
SCALE: 1/2 FULL

(FOR DETAIL NOT SHOWN, SEE OTHER SECTIONS)

PRODUCT REVISED
as complying with the Florida Building Code
Acceptance No 10-0908.09
Expiration Date DEC. 1, 2015
By Manuel Perez
Miami-Dade Product Control Division

PROFESSIONAL ENGINEER
WARREN W. SCHAEFER
LICENSE
STATE OF FLORIDA
NO. 44135

NO.	REVISION DESCRIPTION	BY	DATE

DRAWN BY: M.S.J
CHECKED BY: W.W.S.
PLOT: 1=2
DATE: 06/20/05

DRAWING TITLE
7225/8225TL FIXED/PROJECT-OUT WINDOW (SMALL MISSILE IMPACT)

MANUFACTURER
KAWNEER COMPANY, INC.
555 GUTHRIDGE COURT
NORCROSS, GA 30092
770-449-5555

CONSULTANTS
W. W. SCHAEFER ENGINEERING & CONSULTING, P.A.
8895 N. MILITARY TRAIL; SUITE C-204
PALM BEACH GARDENS, FL 33410
PHONE: 561-775-4902 FAX: 561-775-4903

CERTIFICATION
SEP 01 2010
WARREN W. SCHAEFER, P.E.
P.E. NO. 44135

DRAWING NO. 1416
REV. B
SHEET NO. 3 OF 4

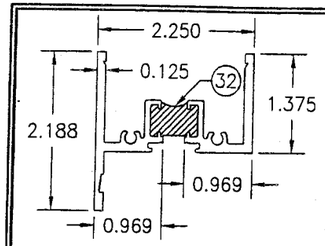

1 FRAME HEAD/JAMB AT FIXED WINDOW

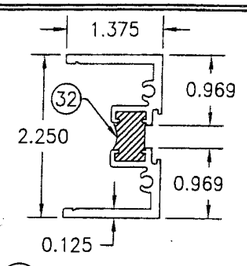

2 FRAME JAMB AT PROJECT-OUT WINDOW

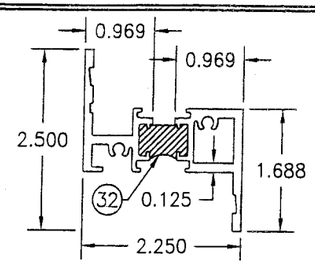

3 BOTTOM RAIL AT FIXED WINDOW

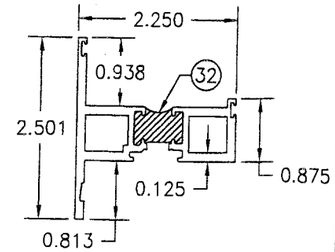

4 STILE & RAIL AT PROJECT OUT-WINDOW

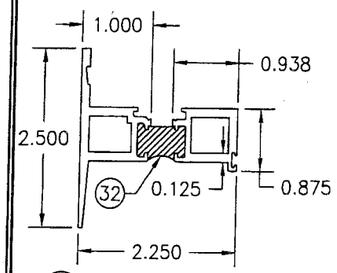

5 BOTTOM RAIL AT PROJECT-OUT WINDOW

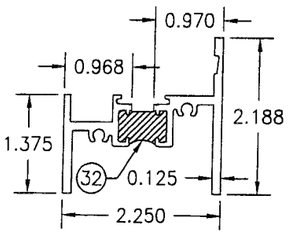

6 SILL

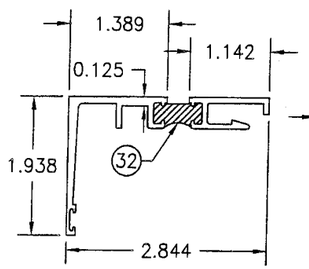

7 HEAD/JAMB ADAPTER

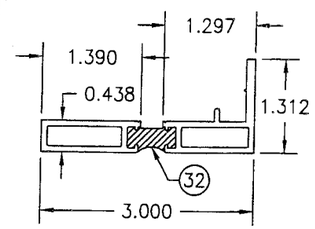

8 SILL ADAPTER

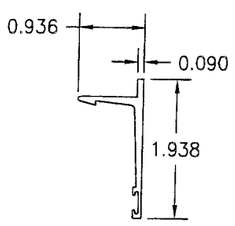

9 HEAD/JAMB CLOSER

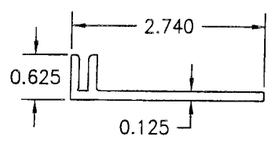

10 FRAME MOUNTING CLIP
LENGTH = 2"

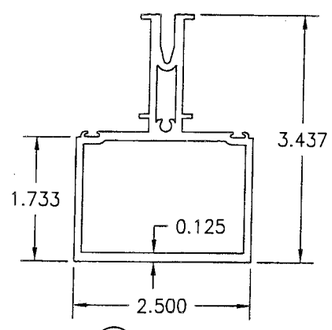

11 MULLION

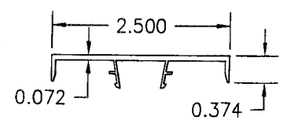

12 MULLION COVER

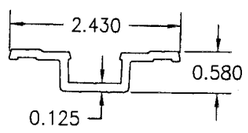

13 MULLION STOP

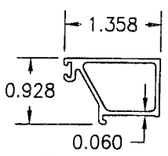

15 NON-I.G. GLAZING BEAD

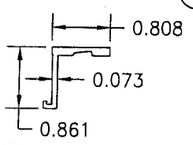

17 REVERSE PROJECTION ADAPTER

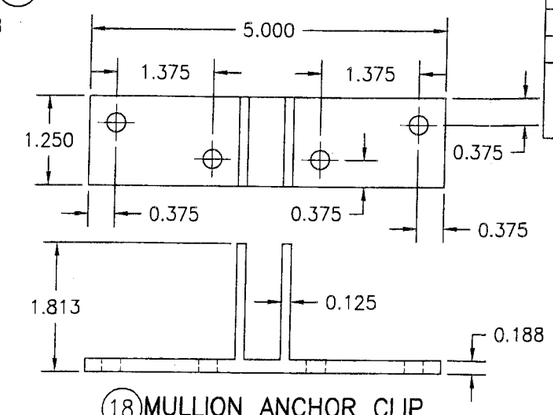

18 MULLION ANCHOR CLIP

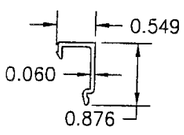

14 EXTERIOR SEAL ADAPTER

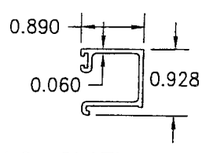

16 I.G. GLAZING BEAD COVER
USED WITH GLASS OPTIONS 3 & 4

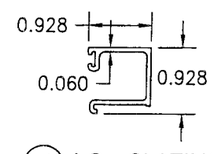

19 I.G. GLAZING BEAD COVER
USED WITH GLASS OPTIONS 5 & 6

ITEM #	PART #	ITEM DESCRIPTION	MANUFACTURER/NOTES
		PARTS	
1	228-034/228-134	FRAME HEAD/JAMB AT FIXED WINDOW	6063-T6 ALUMINUM (SEE NOTE 1)
2	228-034/228-134	FRAME JAMB AT PROJECT-OUT WINDOW	6063-T6 ALUMINUM (SEE NOTE 1)
3	225-251/225-351	BOTTOM RAIL AT FIXED WINDOW	6063-T6 ALUMINUM (SEE NOTE 1)
4	225-225/225-325	STILE & RAIL AT PROJECT-OUT WINDOW	6063-T6 ALUMINUM (SEE NOTE 1)
5	225-220/225-320	BOTTOM RAIL AT PROJECT-OUT WINDOW	6063-T6 ALUMINUM (SEE NOTE 1)
6	225-013/225-113	SILL	6063-T6 ALUMINUM (SEE NOTE 1)
7	224-054/224-154	HEAD/JAMB ADAPTER	6063-T6 ALUMINUM (SEE NOTE 1)
8	224-055/224-155	SILL ADAPTER	6063-T6 ALUMINUM (SEE NOTE 1)
9	325-059	HEAD/JAMB CLOSER	6063-T6 ALUMINUM
10	225-165	FRAME MOUNTING CLIP	6063-T6 ALUMINUM
11	224-071	MULLION	6063-T6 ALUMINUM
12	224-074	MULLION COVER	6063-T6 ALUMINUM
13	224-073	MULLION STOP	6063-T6 ALUMINUM
14	228-281	EXTERIOR SEAL ADAPTER	6063-T6 ALUMINUM
15	224-082	NON-I.G. GLAZING BEAD	6063-T6 ALUMINUM
16	224-083	I.G. GLAZING BEAD	6063-T6 ALUMINUM
17	225-079	REVERSE PROJECTION ADAPTER	6063-T6 ALUMINUM
18	225-548	MULLION ANCHOR CLIP	6063-T6 ALUMINUM
19	224-063	I.G. GLAZING BEAD	6063-T6 ALUMINUM
		HARDWARE	
24	225-405	PROJECT-OUT CAM LOCK	WHITE BRONZE US-25D (2 PER WINDOW)
25	229-156	FRAME SNUBBER (1 PER WINDOW)	WHITE ETPU; SECURED WITH 2 NO. 10 X 7/16" S.S. PH SCREWS
26	229-154	VENT SNUBBER (1 PER WINDOW)	304 SERIES SS; SECURED WITH 2 NO. 10 X 7/16" S.S. PH SCREWS
27	229-101	ADVANTAGE 4-BAR HINGE	300 SERIES SS
		SEALS AND SEALANTS	
32	–	DEBRIDGING/THERMAL BREAK (OPTIONAL)	2-PART POLYURETHANE
33	127-074	BULB GASKET	VISTAPLEX/POLYPROPYLENE
34	027-874	VENT WEATHERSTRIP	VISTAPLEX/POLYPROPYLENE
35	127-104	SILICONE	DOW CORNING INSTANT GLAZE
36	027-883	WEATHERSTRIP	SANTOPRENE
37	127-038	BACK-UP WEDGE	SCR-900
		MISC. FASTENERS	
42	977-108	#10 X 3/4" SELF TAPPING PH SCREW	1 PER FRAME MOUNTING CLIP
43	128-415	#10 X 1/2" FHTF SCREW	2 PER CAM
45	128-406	1/4" X 1" HHTF SCREW	3" FROM ENDS & 9" O.C.
46	128-192	1/4" X 3/8" PHTF SCREW	1 PER MULLION ANCHOR CLIP
47	128-414	#10 X 7/16" PHTF SCREW	6 PER HINGE

(1) PARTS 1 THROUGH 8 MAY BE THERMALLY BROKEN AS SHOWN OR BE ONE WHOLE UNCUT EXTRUSION (EXTRUSIONS ARE CUT TO ALLOW FOR THERMAL BREAK PLACEMENT).

PRODUCT REVISED
as complying with the Florida
Building Code
Acceptance No 10-0908.09
Expiration Date DEC. 1, 2015
By Manuel Perez
Miami Dade Product Control
Division

WARREN W. SCHAEFER LICENSE NO. 44135 STATE OF FLORIDA PROFESSIONAL ENGINEER

DRAWN BY: M.S.J.	CHECKED BY: W.W.S.
PLOT: 1=2	DATE: 06/20/05

NO.	REVISION DESCRIPTION	BY	DATE

DRAWING TITLE
7225/8225TL FIXED/PROJECT-OUT WINDOW (SMALL MISSILE IMPACT)

MANUFACTURER
KAWNEER COMPANY, INC.
555 GUTHRIDGE COURT
NORCROSS, GA 30092
770-449-5555

CONSULTANTS
W. W. SCHAEFER ENGINEERING & CONSULTING, P.A.
8895 N. MILITARY TRAIL; SUITE C-204
PALM BEACH GARDENS, FL 33410
PHONE: 561-775-4902 FAX: 561-775-4903

CERTIFICATION
SEP 01 2010
WARREN W. SCHAEFER, P.E.
P.E. NO. 44135

DRAWING NO. 1416
REV. B
SHEET NO. 4 OF 4