MIAMI-DADE COUNTY, FLORIDA
METRO-DADE FLAGLER BUILDING

BUILDING CODE COMPLIANCE OFFICE (BCCO)
PRODUCT CONTROL DIVISION

140 WEST FLAGLER STREET, SUITE 1603
MIAMI, FLORIDA 33130-1563
(305) 375-2901 FAX (305) 375-2908
www.buildingcodeonline.com

NOTICE OF ACCEPTANCE (NOA)

EZ Home Improvements, Inc.
18505 SW 104th Avenue (Bay #7)
Miami, Florida 33157

SCOPE:
This NOA is being issued under the applicable rules and regulations governing the use of construction materials. The documentation submitted has been reviewed by Miami-Dade County Product Control Division and accepted by the Board of Rules and Appeals (BORA) to be used in Miami Dade County and other areas where allowed by the Authority Having Jurisdiction (AHJ).

This NOA shall not be valid after the expiration date stated below. The Miami-Dade County Product Control Division (In Miami Dade County) and/or the AHJ (in areas other than Miami Dade County) reserve the right to have this product or material tested for quality assurance purposes. If this product or material fails to perform in the accepted manner, the manufacturer will incur the expense of such testing and the AHJ may immediately revoke, modify, or suspend the use of such product or material within their jurisdiction. BORA reserves the right to revoke this acceptance, if it is determined by Miami-Dade County Product Control Division that this product or material fails to meet the requirements of the applicable building code.

This product is approved as described herein, and has been designed to comply with the High Velocity Hurricane Zone of the Florida Building Code.

DESCRIPTION: HT-100 / Aluminum Accordion Shutter

APPROVAL DOCUMENT: Drawing No. HTS.09003e, titled "HT-100 Accordion Shutter", sheets 1 through 7 of 7, prepared by Nu-Wind Engineering, dated August 30, 2010, signed and sealed by Christian Langley, P.E., bearing the Miami-Dade County Product Control revision stamp with the Notice of Acceptance number and the expiration date by the Miami-Dade County Product Control Division.

MISSILE IMPACT RATING: Large and Small Missile Impact Resistant

LABELING: Each unit shall bear a permanent label with the manufacturer's name or logo, city, state and the following statement: "Miami-Dade County Product Control Approved", unless otherwise noted herein.

RENEWAL of this NOA shall be considered after a renewal application has been filed and there has been no change in the applicable building code negatively affecting the performance of this product.

TERMINATION of this NOA will occur after the expiration date or if there has been a revision or change in the materials, use, and/or manufacture of the product or process. Misuse of this NOA as an endorsement of any product, for sales, advertising or any other purposes shall automatically terminate this NOA. Failure to comply with any section of this NOA shall be cause for termination and removal of NOA.

ADVERTISEMENT: The NOA number preceded by the words Miami-Dade County, Florida, and followed by the expiration date may be displayed in advertising literature. If any portion of the NOA is displayed, then it shall be done in its entirety.

INSPECTION: A copy of this entire NOA shall be provided to the user by the manufacturer or its distributors and shall be available for inspection at the job site at the request of the Building Official.
This NOA **revises & renews NOA #05-0524.01** and consists of this page 1, evidence submitted pages E-1 & E-2 as well as approval document mentioned above.
The submitted documentation was reviewed by **Helmy A. Makar, P.E., M.S.**

MIAMI-DADE COUNTY APPROVED

Helmy A. Makar
11/18/2010

NOA No. 10-0908.24
Expiration Date: 06/23/2015
Approval Date: 11/18/2010
Page 1

EZ Home Improvements, Inc.

NOTICE OF ACCEPTANCE: EVIDENCE SUBMITTED

1. EVIDENCE SUBMITTED UNDER PREVIOUS APPROVAL #05-0524.01

A. DRAWINGS

1. *Drawing No. 05-341, titled "HT-100 Aluminum Accordion Shutter", sheets 1 through 7 of 7, prepared by Thornton-Tomasetti Group, dated 10/17/02, last revision #2 dated 12/20/2004, signed and sealed by V. J. Knezevich, P.E. on 04/14/2005.*

B. TESTS

1. *See Association's generic approval under 02-0799.*

C. CALCULATIONS

1. *See Association's generic approval under 02-0799.*

D. QUALITY ASSURANCE

1. *By Miami-Dade County Building Code Compliance Office.*

E. MATERIAL CERTIFICATIONS

1. *See Association's generic approval under 02-0799.*

F. STATEMENTS

1. *Release letter issued by Hi-Tech Shutter Group, Inc., dated April 14, 2005, certifying this product to meet the criteria of product tested and approved, and allowing EZ Home Improvements, Inc. to use the test results approved under Miami-Dade County Approval No. 02-0799, signed by Frank S. Cornelius.*
2. *Acknowledgment letter by Home Improvements, Inc., dated April 18, 2005, signed by Elmer Zimbelmann.*
3. *Statement letter of conformance by Thornton-Tomasetti Group, dated April 14, 2005, certifying that the drawing (No. 05-341) prepared for Home Improvements, Inc., signed and sealed by Mr. V. J. Knezevich, P.E.., is engineering wise identical to* Hi-*Tech Shutter Group, Inc. generic drawing (No. 02-458).*

2. NEW EVIDENCE SUBMITTED

A. DRAWINGS

1. *Drawing No. HTS.09003e, titled "HT-100 Accordion Shutter", sheets 1 through 7 of 7, prepared by Nu-Wind Engineering, dated August 30, 2010, signed and sealed by Christian Langley, P.E.*

Hamy A. Makar, P.E., M.S.
Senior Product Control Examiner
NOA No. 10-0908.24
Expiration Date: 06/23/2015
Approval Date: 11/18/2010

EZ Home Improvements, Inc.

NOTICE OF ACCEPTANCE: EVIDENCE SUBMITTED

B. TESTS

1. *See Association's generic approval under 09-1510.*

C. CALCULATIONS

1. *See Association's generic approval under 09-1510.*

D. QUALITY ASSURANCE

1. *By Miami-Dade County Building Code Compliance Office.*

E. MATERIAL CERTIFICATIONS

1. *See Association's generic approval under 09-1510.*

F. STATEMENTS

1. *Release letter issued by Hi-Tech Shutter Group, Inc., dated July 07, 2010, certifying this product to meet the criteria of product tested and approved, and allowing EZ Home Improvements, Inc. to use the test results approved under Miami-Dade County Approval No. 09-1510, signed by Yovanna Diaz.*
2. *Acknowledgment letter by Home Improvements, Inc., dated July 07, 2010, signed by Elmer Zimbelmann.*
3. *Statement letter of conformance by Nu-Wind Engineering, dated September 01, 2010, certifying that the drawing (No. HTS.09003e) prepared for Home Improvements, Inc., signed and sealed by Mr. Christian Langley, P.E., is engineering wise identical to* Hi-*Tech Shutter Group, Inc. generic drawing (No. HTS.09003).*

Helmy A. Makar, P.E., M.S.
Senior Product Control Examiner
NOA No. 10-0908.24
Expiration Date: 06/23/2015
Approval Date: 11/18/2010

HT-100 ACCORDION SHUTTER

GENERAL NOTES

1. THE SYSTEM DEPICTED HEREIN HAS BEEN TESTED & EVALUATED IN ACCORDANCE WITH THE 2007 FLORIDA BUILDING CODE WITH 2009 SUPPLEMENTS, FOR USE WITHIN AND OUTSIDE THE HIGH VELOCITY HURRICANE ZONE (HVHZ).
2. THIS SYSTEM HAS BEEN EVALUATED WITHOUT A ONE-THIRD INCREASE IN ALLOWABLE STRESS.
3. POSITIVE AND NEGATIVE DESIGN PRESSURES CALCULATED FOR USE WITH THIS SYSTEM SHALL BE DETERMINED BY OTHERS ON A SITE-SPECIFIC BASIS IN ACCORDANCE WITH THE GOVERNING CODE.
4. THE SYSTEM DETAILED HEREIN IS GENERIC AND DOES NOT PROVIDE INFORMATION FOR A SPECIFIC SITE. FOR SITE CONDITIONS DIFFERENT FROM THE CONDITIONS DETAILED HEREIN, A LICENSED PROFESSIONAL ENGINEER OR REGISTERED ARCHITECT SHALL PREPARE SITE-SPECIFIC DOCUMENTS FOR USE IN CONJUNCTION WITH THIS APPROVAL AND APPLY FOR MIAMI-DADE COUNTY PRODUCT CONTROL DIVISION ONE-TIME APPROVAL.
5. CONTRACTOR, ARCHITECT, ENGINEER OF RECORD, OR BUILDING OFFICIAL SHALL VERIFY THE ADEQUACY OF THE EXISTING STRUCTURE TO WITHSTAND SUPERIMPOSED LOADS.
6. ALL ALUMINUM EXTRUSIONS SHALL BE 6063-T6 ALLOY & TEMPER, U.N.O.
7. ALL POLYCARBONATE COMPONENTS SHALL BE FABRICATED FROM 100% "*LEXAN*" POLYMER (BY *SABIC INNOVATIVE PLASTICS*) APPROVED FOR OUTDOOR USE WITHIN THE HVHZ.
8. SHUTTERS SHALL HAVE A MINIMUM OF ONE LOCK LOCATED WITHIN 18" OF MID-SPAN (MEASURED VERTICALLY) AT ANY HORIZONTAL LOCATION, AND SHALL BE ENGAGED WITH SHUTTER IN "CLOSED" POSITION TO PROVIDE HURRICANE PROTECTION.
9. EACH SHUTTER ASSEMBLY SHALL BE PERMANENTLY LABELED WITH A MINIMUM OF ONE LABEL PER UNIT CONTAINING ALL INFORMATION SPECIFIED IN THE ABOVE-NOTED BUILDING CODE, AS WELL AS THE FOLLOWING:

   EZ HOME REMODELING
   CUTLER RIDGE, FLORIDA
   MIAMI-DADE PRODUCT CONTROL APPROVED

10. HEAD & SILL DETAILS MAY BE INTERCHANGED WHERE NOTED IN MOUNTING SECTIONS TO FIT FIELD CONDITIONS.
11. ALL BOLTS & WASHERS SHALL BE ZINC COATED STEEL, GALVANIZED STEEL, OR STAINLESS STEEL WITH A MINIMUM TENSILE YIELD STRENGTH OF 60 KSI. ALL 3/16"ø POP RIVETS SHALL BE 5052-H32 ALUMINUM ALLOY OR STRONGER.
12. OPTIONAL: SHUTTER BLADES MAY BE STACKED (i.e. HELD IN OPEN POSITION) USING ANY COMBINATION OF THE FOLLOWING METHODS:
    - ALUMINUM "STACK LOCKING CLIP" (PART #26)
    - PLASTIC CLIP PLACED IN TRACK (HEAD &/OR SILL)
    - PULL-OUT CLEVIS PIN INSERTED INTO TRACK (HEAD &/OR SILL)
    - VELCRO STRAP AROUND STACKED BLADES (AT ANY HEIGHT)
13. ALL STEEL IN CONTACT WITH ALUMINUM SHALL BE PAINTED OR PLATED AS PRESCRIBED IN THE ABOVE-NOTED BUILDING CODE.

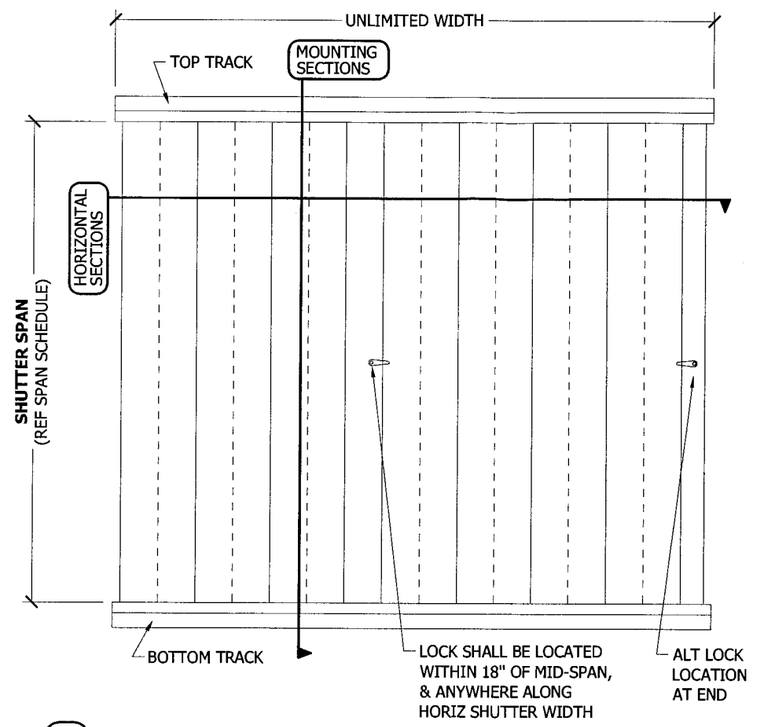

1 / 1 TYPICAL ELEVATION
SCALE: N.T.S. EXTER ELEV

PRODUCT REVISED
as complying with the Florida Building Code
Acceptance No 10-0908.24
Expiration Date 06/23/2015
By
Miami Dade Product Control Division

BLADE COMPONENTS

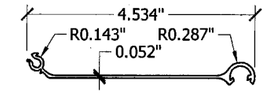

1 ALUMINUM BLADE
SCALE: 1:3

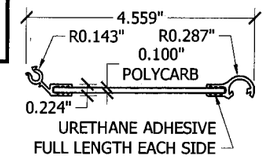

2 POLYCARBONATE BLADE
SCALE: 1:3

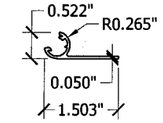

7 END SLAT
SCALE: 1:3

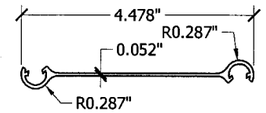

3 ALUM BLADE ADAPTER
SCALE: 1:3

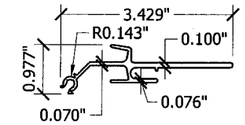

4 UNIMATE
SCALE: 1:3

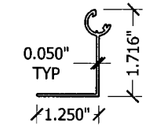

8 90° END SLAT
SCALE: 1:3

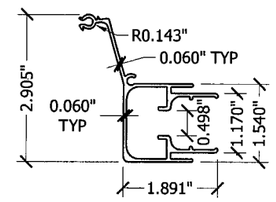

5 CENTERMATE 1
SCALE: 1:3

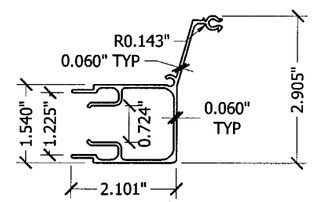

6 CENTERMATE 2
SCALE: 1:3

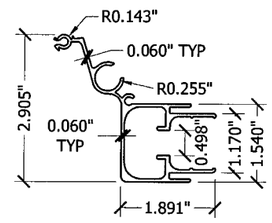

5a ALT CENTERMATE 1
SCALE: 1:3

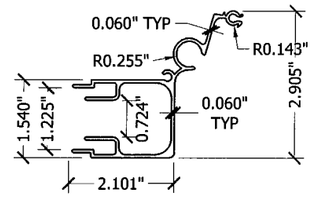

6a ALT CENTERMATE 2
SCALE: 1:3

TRACK COMPONENTS

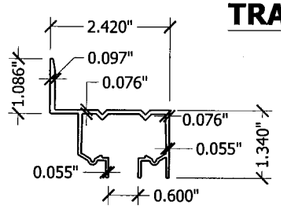

9 WALL TRACK
SCALE: 1:3

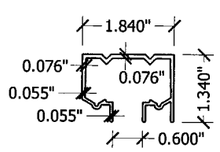

11 CEILING TRACK
SCALE: 1:3

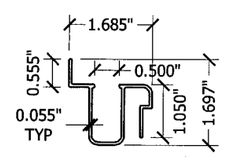

13 ADJUSTABLE SILL TOP
SCALE: 1:3

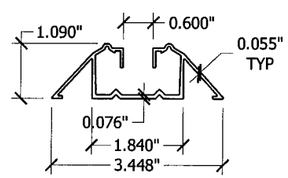

16 WALKOVER SILL TRACK
SCALE: 1:3

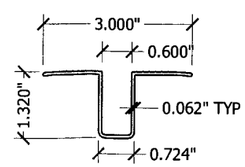

17 RECESSED SILL TRACK
SCALE: 1:3

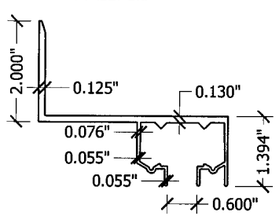

10 BUILDOUT WALL TRACK
SCALE: 1:3

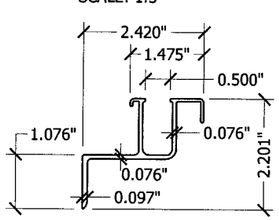

12 WALL SILL TRACK
SCALE: 1:3

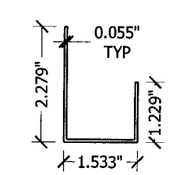

14 ADJUSTABLE SILL BOTTOM
SCALE: 1:3

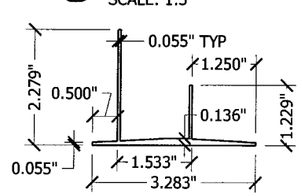

15 ADJUSTABLE SILL BOTTOM (ALT)
SCALE: 1:3

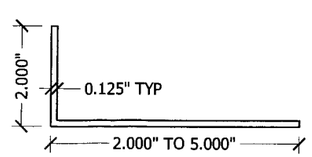

18 ANGLE
SCALE: 1:3

ASSEMBLY COMPONENTS

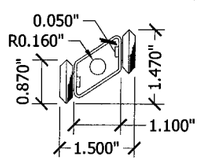

- NYLON ROLLERS
- STAINLESS STEEL CARRIAGE & RIVETS

19 ROLLER ASSEMBLY
SCALE: 1:3

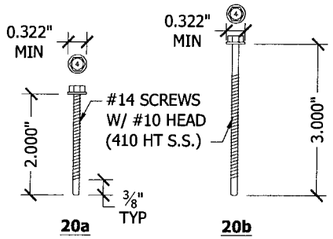

20 #10 KNUCKLE SCREWS
SCALE: 1:3

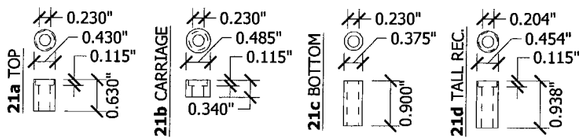

21 NYLON BUSHINGS
SCALE: 1:3

NU-WIND ENGINEERING
UNIQUE TECHNOLOGY ... STANDARD SOLUTIONS
1200 N FEDERAL HWY, #200
BOCA RATON, FL 33432
www.nu-wind.com
Ofc: (954) 333-8965
Fax: (954) 719-3707
C.A. #28511
CHRISTIAN LANGLEY, PE
FL PE #67382 CA #28511

REVISIONS	DATE	DESCRIPTION	BY
1	8/30/10	INITIAL SUBMITTAL	CL
2	-	-	-
3	-	-	-
4	-	-	-
5	-	-	-

PRODUCT: HT-100 ACCORDION SHUTTER
MIAMI-DADE BCCO NOTICE OF ACCEPTANCE

MANUFACTURER: EZ HOME REMODELING
18505 SW 104 AVE, #7
CUTLER RIDGE, FL 33157

DRAWING NUMBER: HTS.09003e

SHEET 1 OF 7

dangley 8/31/2010 16:32
HTS.09003_01f Alum-Shutters (e).dwg (Cr: 8/31/2010 16:16)

LOCKS & ACCESSORIES

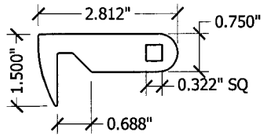

THICKNESS: 0.125"
(STAINLESS STEEL)

22 HOOK LOCKING ARM
SCALE: 1:3

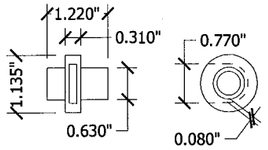

24 HOOK LOCKING ARM BUSHING
SCALE: 1:3 NYLON

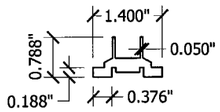

23 HOOK LOCK INSERT
SCALE: 1:3

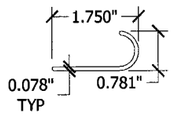

25 HANDLE (OPTIONAL)
SCALE: 1:3

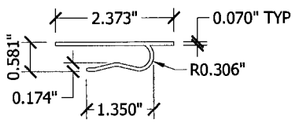

26 STACK LOCKING CLIP
SCALE: 1:3

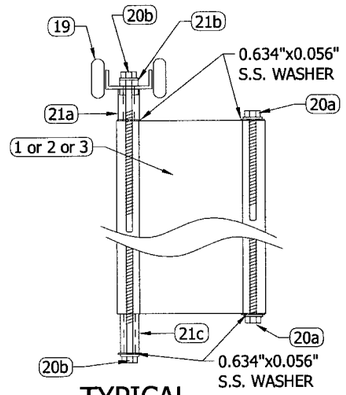

1/2 TYPICAL BLADE ASSEMBLY
SCALE: 1:3 SIDE ELEVATION

HORIZONTAL SECTIONS

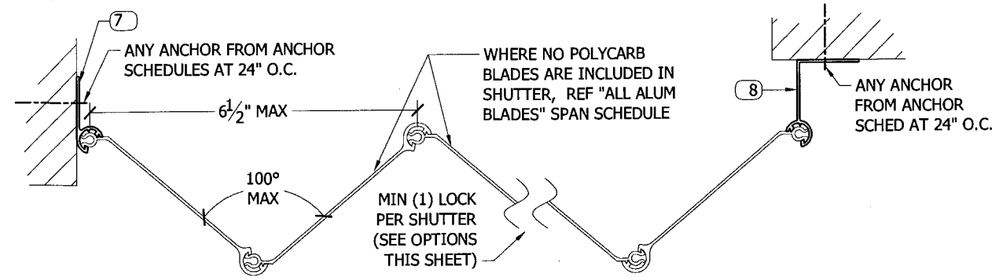

2/2 SHUTTER ASSEMBLY WITH ALUMINUM BLADES
SCALE: 1:3 HORIZ SECTION

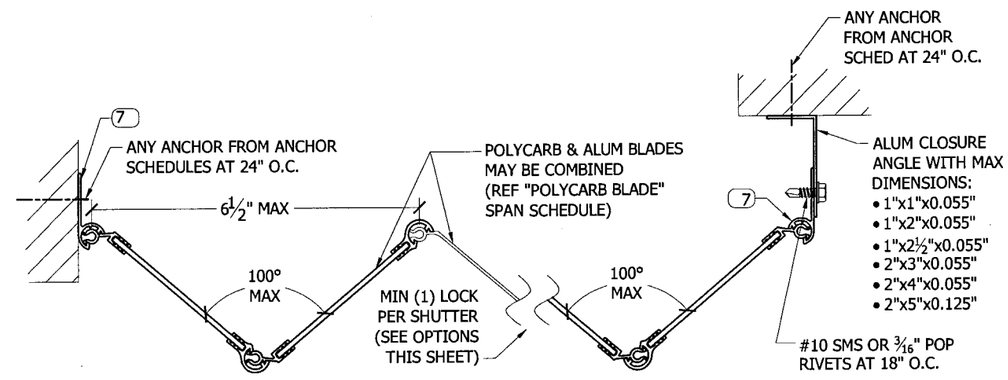

3/2 SHUTTER ASSEMBLY WITH POLYCARB BLADES
SCALE: 1:3 HORIZ SECTION

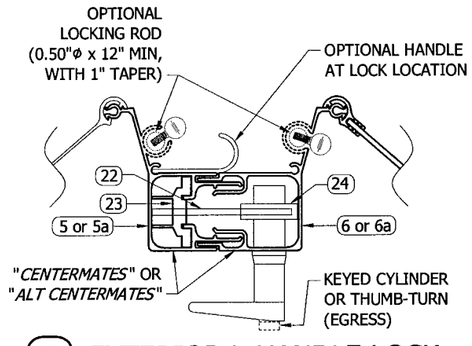

4/2 EXTERIOR L-HANDLE LOCK
SCALE: 1:3 HORIZ SECTION

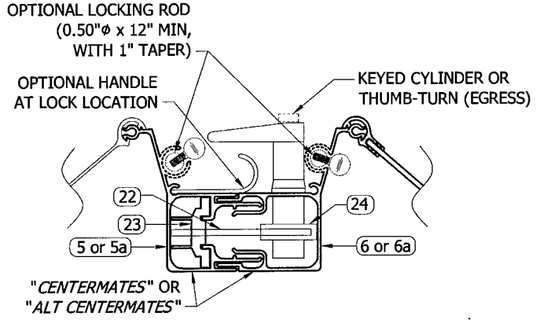

5/2 INTERIOR L-HANDLE LOCK
SCALE: 1:3 HORIZ SECTION

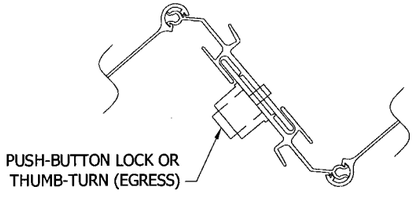

6/2 UNIMATE + PUSH-BUTTON
SCALE: 1:3 HORIZ SECTION

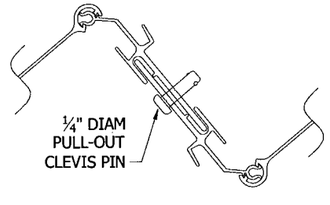

7/2 UNIMATE + CLEVIS PIN
SCALE: 1:3 HORIZ SECTION

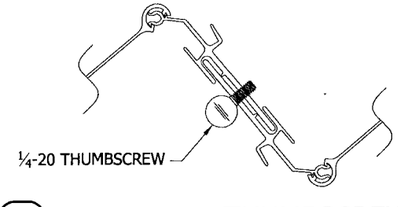

8/2 UNIMATE + THUMBSCREW
SCALE: 1:3 HORIZ SECTION

PRODUCT REVISED
as complying with the Florida
Building Code
Acceptance No 10-0908.24
Expiration Date 06/23/2015
By
Miami Dade Product Control
Division

NU-WIND ENGINEERING
UNIQUE PROBLEMS ... STANDARD SOLUTIONS
1200 N FEDERAL HWY, #200
BOCA RATON, FL 33432
www.nu-wind.com
Ofc: (954) 333-8965
Fax: (954) 719-3707
C.A. #28511

Aug 31, 2010
CHRISTIAN LANGLEY, PE
FL PE #67382, CA #28511

REVISIONS	DATE	DESCRIPTION	BY
V	8/30/10	INITIAL SUBMITTAL	CL
I	-	-	-
S	-	-	-
H	-	-	-
O	-	-	-
N	-	-	-
S	-	-	-

PRODUCT
HT-100
ACCORDION SHUTTER
MIAMI-DADE BCCO
NOTICE OF ACCEPTANCE

MANUFACTURER
EZ HOME
REMODELING
18505 SW 104 AVE, #7
CUTLER RIDGE, FL 33157

DRAWING NUMBER:
HTS.09003e

SHEET
2 OF 7

clangley 8/31/2010 16:32
HTS.09003_01f Alum-Shutters (e).dwg (Cr: 8/31/2010 16:16)

SPECIAL INSTALLATION OPTIONS:

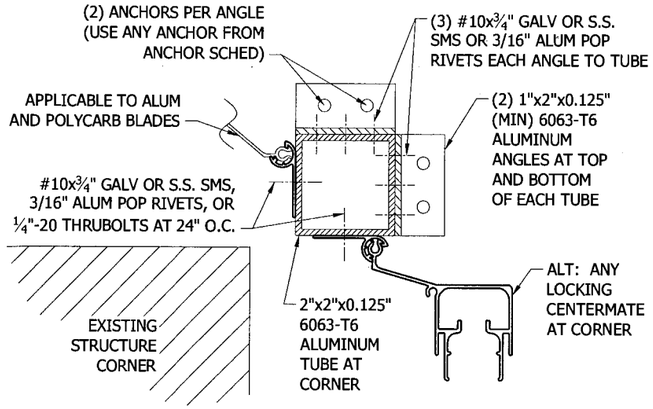

1/3 CORNER CLOSURE WITH POST
SCALE: 1:3 HORIZ SECTION

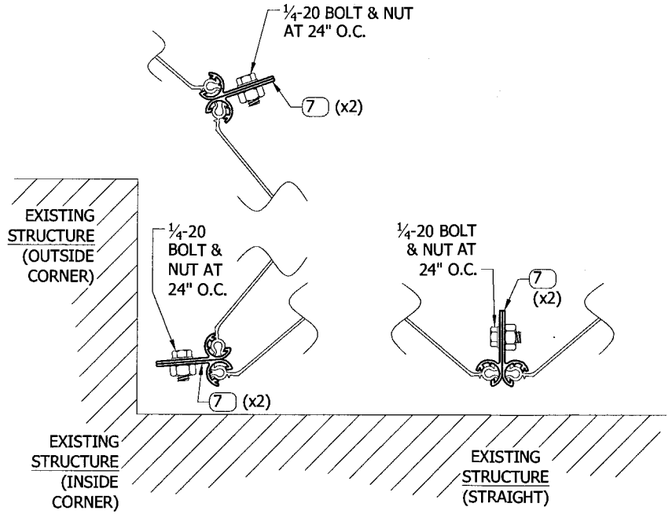

3/3 FLOATING STACK OPTIONS
SCALE: 1:3 HORIZ SECTION

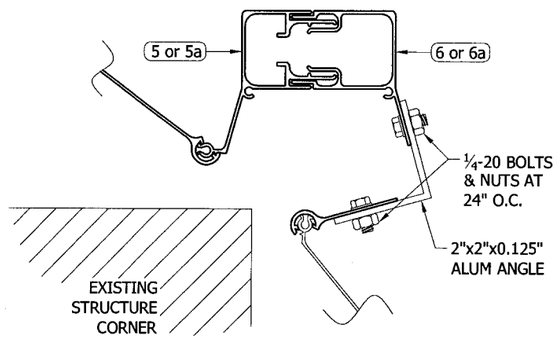

2/3 CORNER CLOSURE WITH CENTERMATES (NO POST)
SCALE: 1:3 HORIZ SECTION

NOTE: ANY FLOOR TRACK MAY BE USED - REFER TO MOUNTING SECTIONS FOR ANCHOR REQUIREMENTS

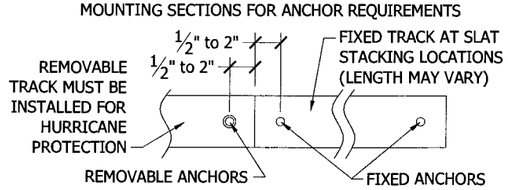

5/3 REMOVABLE FLOOR TRACK
SCALE: N.T.S. PLAN VIEW

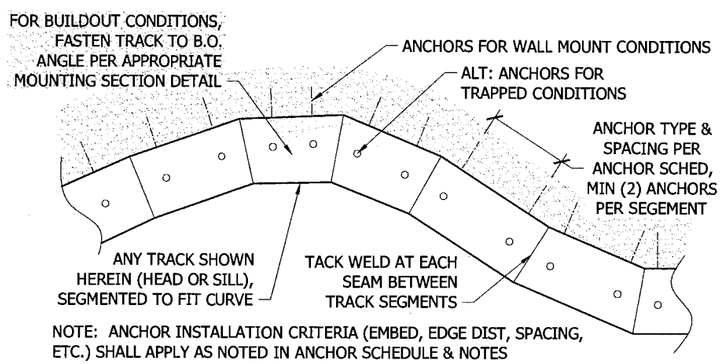

NOTE: ANCHOR INSTALLATION CRITERIA (EMBED, EDGE DIST, SPACING, ETC.) SHALL APPLY AS NOTED IN ANCHOR SCHEDULE & NOTES

4/3 SEGMENTED TRACK OPTION
SCALE: 1:3 PLAN VIEW

NOTE: ANY TRACK MAY BE USED - REFER TO MOUNTING SECTIONS FOR ANCHOR REQUIREMENTS

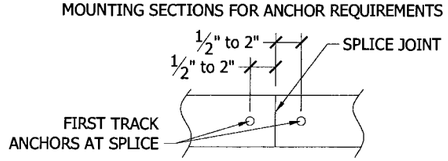

TYP HEAD & SILL

6/3 SPLICED TRACK
SCALE: N.T.S. PLAN VIEW

STUD & TRUSS/RAFTER MOUNTING CONDITIONS:

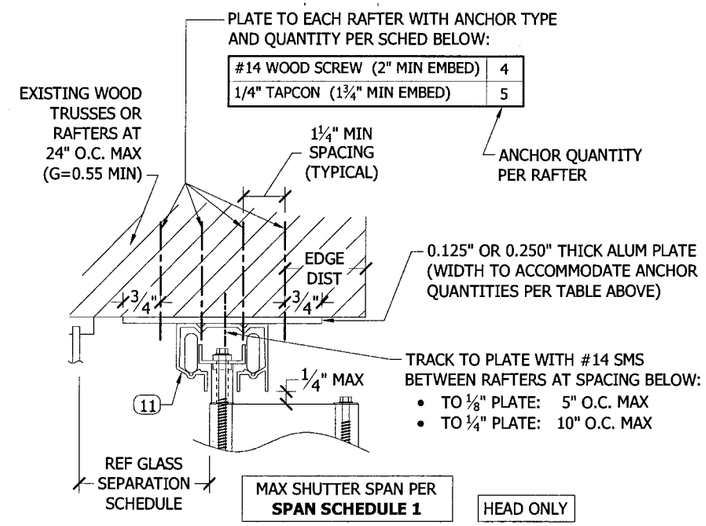

7/3 TRUSS-MOUNT CEILING TRACK
SCALE: 4" = 1'-0" MOUNTING SECTION

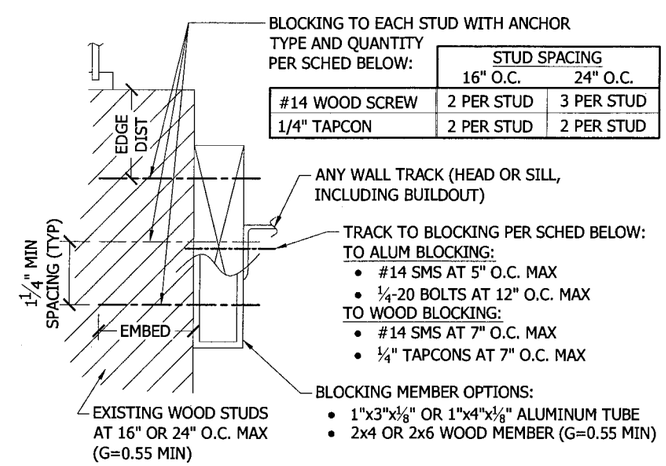

STUD SPACING	16" O.C.	24" O.C.
#14 WOOD SCREW	2 PER STUD	3 PER STUD
1/4" TAPCON	2 PER STUD	2 PER STUD

REF WALL TRACK MOUNTING DETAILS FOR GOVERNING SPAN SCHEDULE

TYP HEAD & SILL (SILL SHOWN)

8/3 STUD WALL MOUNT
SCALE: 4" = 1'-0" MOUNTING SECTION

PRODUCT REVISED
as complying with the Florida Building Code
Acceptance No 10-0908.24
Expiration Date 06/23/2015
By [signature]
Miami Dade Product Control Division

NU-WIND ENGINEERING
UNIQUE PROBLEMS ... STANDARD SOLUTIONS
www.nu-wind.com
Ofc: (954) 333-8965
Fax: (954) 719-3707
1200 N FEDERAL HWY, #200
BOCA RATON, FL 33432
CA. #28511

Aug 31 2010
CHRISTIAN LANGLEY, PE
FL PE #67382 CA #28511

REVISIONS	DATE	DESCRIPTION	BY
-	8/30/10	INITIAL SUBMITTAL	CL
-	-	-	-
-	-	-	-
-	-	-	-
-	-	-	-

PRODUCT
HT-100 ACCORDION SHUTTER
MIAMI-DADE BCCO NOTICE OF ACCEPTANCE

EZ HOME REMODELING
18505 SW 104 AVE, #7
CUTLER RIDGE, FL 33157

MANUFACTURER

DRAWING NUMBER: HTS.09003e

SHEET 3 OF 7

clanglev 8/31/2010 16:32
HTS.09003_01f Alum-Shutters (e).dwg (Cr: 8/31/2010 16:16)

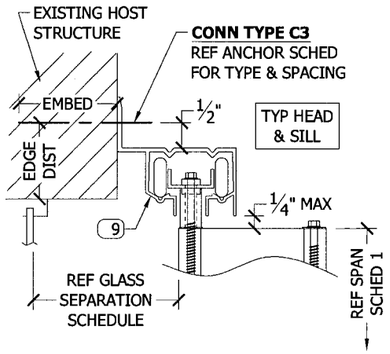

1/4 WALL TRACK

SCALE: 4" = 1'-0" MOUNTING SECTION

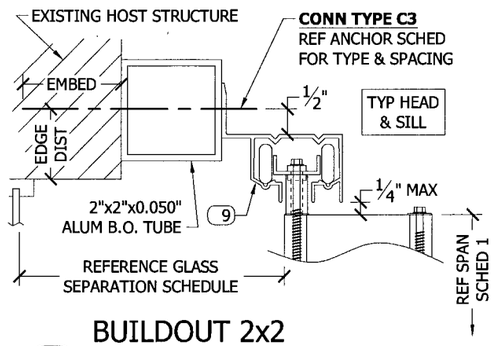

2/4 BUILDOUT 2x2 + WALL TRACK

SCALE: 4" = 1'-0" MOUNTING SECTION

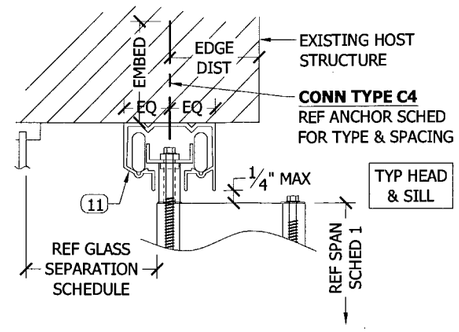

3/4 CEILING TRACK

SCALE: 4" = 1'-0" MOUNTING SECTION

4/4 WALL SILL TRACK

SCALE: 4" = 1'-0" MOUNTING SECTION

5/4 BUILDOUT 2x2 + WALL SILL TRACK

SCALE: 4" = 1'-0" MOUNTING SECTION

6/4 RECESSED SILL TRACK

SCALE: 4" = 1'-0" MOUNTING SECTION

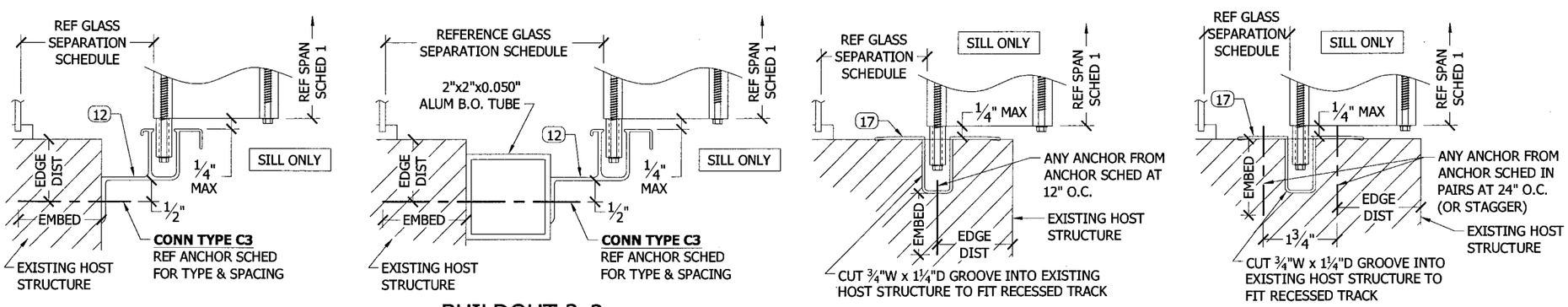

7/4 RECESSED SILL TRACK (ALT)

SCALE: 4" = 1'-0" MOUNTING SECTION

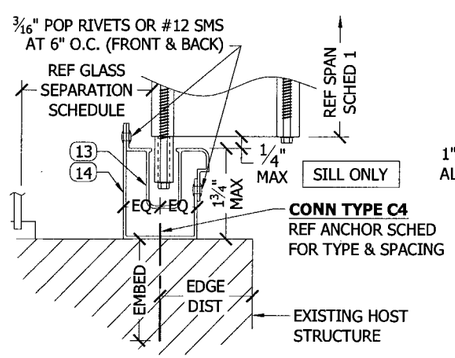

8/4 ADJUSTABLE SILL TRACK (STANDARD ANCHORAGE)

SCALE: 4" = 1'-0" MOUNTING SECTION

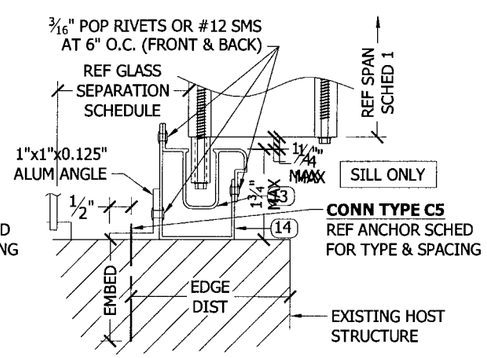

9/4 ADJUSTABLE SILL TRACK (1x1 ANGLE ANCHORAGE)

SCALE: 4" = 1'-0" MOUNTING SECTION

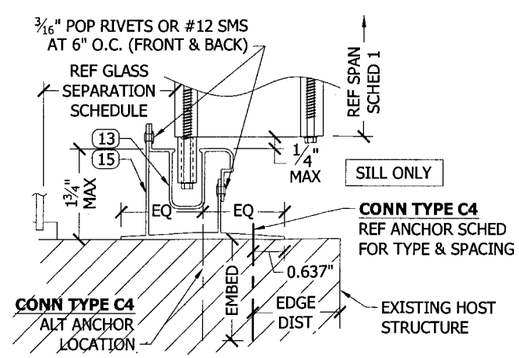

10/4 ADJUSTABLE SILL TRACK (FLANGED BOTTOM)

SCALE: 4" = 1'-0" MOUNTING SECTION

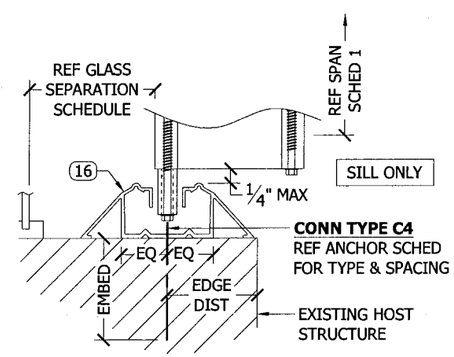

11/4 WALKOVER SILL TRACK

SCALE: 4" = 1'-0" MOUNTING SECTION

SPAN SCHEDULE NOTES:

1. SCHEDULE ABOVE GIVES MAXIMUM ALLOWABLE DESIGN PRESSURES AT EACH RESPECTIVE SPAN.
2. THIS SCHEDULE IS APPLICABLE TO ONLY THOSE COMBINATIONS OF MOUNTING CONDITIONS SHOWN IN THIS SECTION.
3. WHERE THESE MOUNTING CONDITIONS ARE COMBINED WITH OTHERS SHOWN ELSEWHERE HEREIN, THE LESSER ALLOWABLE DESIGN PRESSURE AND SPAN SHALL GOVERN.

SPAN SCHEDULE 1

APPLICABLE TO ALL MOUNTING CONDITIONS ON THIS SHEET, AS WELL AS DETAILS 7/3 & 8/3

BLADE SPAN	ALLOWABLE DESIGN WIND PRESSURE	
	ALL ALUM BLADES	POLYCARB BLADES
4'-0"	±170.0 PSF	+132.8 / -144.0 PSF
4'-6"	±162.7 PSF	+118.0 / -128.0 PSF
5'-0"	±146.4 PSF	+106.2 / -115.2 PSF
5'-6"	±133.1 PSF	+ 96.6 / -104.7 PSF
6'-0"	±122.0 PSF	+ 88.5 / - 96.0 PSF
6'-4"	±115.6 PSF	+ 83.9 / - 90.9 PSF
6'-8"	±109.8 PSF	+ 79.7 / - 86.4 PSF
7'-0"	±104.6 PSF	+ 75.9 / - 82.3 PSF
7'-4"	± 99.8 PSF	+ 72.4 / - 78.5 PSF
7'-8"	± 95.5 PSF	+ 69.3 / - 75.1 PSF
8'-0"	± 91.4 PSF	+ 66.4 / - 72.0 PSF
8'-4"	± 87.8 PSF	-----
8'-8"	± 84.5 PSF	-----
9'-0"	± 81.3 PSF	-----
9'-4"	± 78.4 PSF	-----
9'-8"	± 75.7 PSF	-----
10'-0"	± 73.2 PSF	-----
10'-4"	± 70.8 PSF	-----
10'-8"	± 68.6 PSF	-----
11'-0"	± 66.5 PSF	-----
11'-4"	± 64.0 PSF	-----
11'-8"	± 61.3 PSF	-----
12'-0"	± 54.8 PSF	-----
12'-4"	± 49.1 PSF	-----
12'-8"	± 44.1 PSF	-----
13'-0"	± 39.8 PSF	-----
13'-4"	± 35.9 PSF	-----
13'-8"	± 32.5 PSF	-----
14'-0"	± 29.6 PSF	-----
14'-4"	± 26.9 PSF	-----
14'-8"	± 24.5 PSF	-----
15'-0"	± 22.4 PSF	-----

PRODUCT REVISED
as complying with the Florida Building Code
Acceptance No 10-0908.24
Expiration Date 06/23/2015
By [signature]
Miami Dade Product Control Division

NU-WIND ENGINEERING
UNIQUE PROBLEMS ... STANDARD SOLUTIONS
1200 N FEDERAL HWY, #200
BOCA RATON, FL 33432
www.nu-wind.com
Ofc: (954) 333-8965
Fax: (954) 719-3707
C.A. #28511

August 31 2010
CHRISTIAN LANGLEY, PE
FL PE #67382 CA #28511

REVISIONS	DATE	DESCRIPTION	BY
-	8/30/10	INITIAL SUBMITTAL	CL
-	-	-	-
-	-	-	-
-	-	-	-

PRODUCT: HT-100 ACCORDION SHUTTER
MIAMI-DADE BCCO NOTICE OF ACCEPTANCE

MANUFACTURER: EZ HOME REMODELING
18505 SW 104 AVE, #7
CUTLER RIDGE, FL 33157

DRAWING NUMBER: HTS.09003e

SHEET 4 OF 7

clangley 8/31/2010 16:32
HTS.09003_01f Alum-Shutters (e).dwg (Cr: 8/31/2010 16:16)

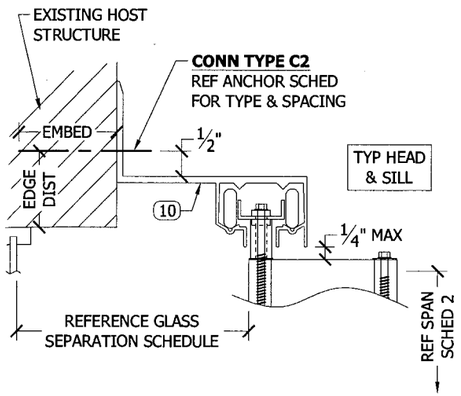

1/5 BUILDOUT WALL TRACK

SCALE: 4" = 1'-0" MOUNTING SECTION

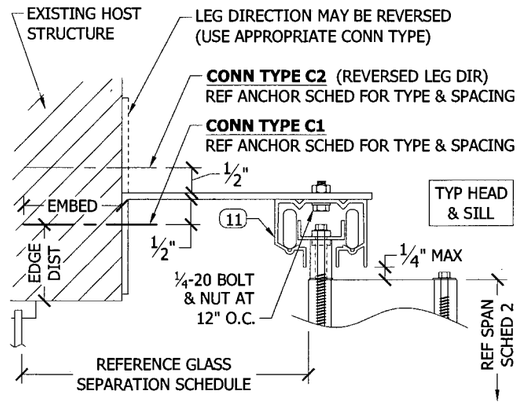

2/5 BUILDOUT 2x5 (STANDARD) + CEILING TRACK

SCALE: 4" = 1'-0" MOUNTING SECTION

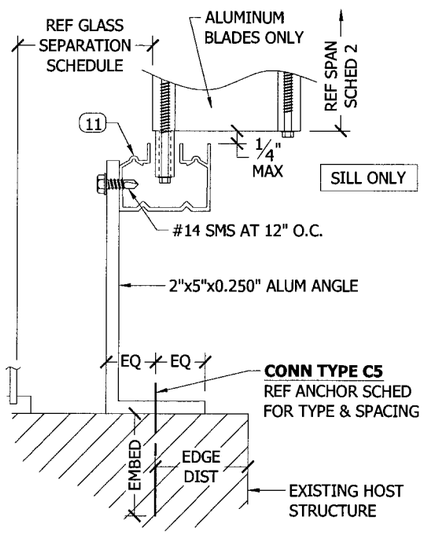

3/5 BUILDUP 2x5 (HEAVY) + CEILING TRACK

SCALE: 4" = 1'-0" MOUNTING SECTION

SPAN SCHEDULE 2

APPLICABLE TO ALL MOUNTING CONDITIONS IN THIS SECTION

BLADE SPAN	ALLOWABLE DESIGN WIND PRESSURE	
	ALL ALUM BLADES	POLYCARB BLADES
4'-0"	±144.0 PSF	+132.8 / -144.0 PSF
4'-6"	±128.0 PSF	+118.0 / -128.0 PSF
5'-0"	±115.2 PSF	+106.2 / -115.2 PSF
5'-6"	±104.7 PSF	+ 96.6 / -104.7 PSF
6'-0"	± 96.0 PSF	+ 88.5 / - 96.0 PSF
6'-4"	± 90.9 PSF	+ 83.9 / - 90.9 PSF
6'-8"	± 86.4 PSF	+ 79.7 / - 86.4 PSF
7'-0"	± 82.3 PSF	+ 75.9 / - 82.3 PSF
7'-4"	± 78.5 PSF	+ 72.4 / - 78.5 PSF
7'-8"	± 75.1 PSF	+ 69.3 / - 75.1 PSF
8'-0"	± 72.0 PSF	+ 66.4 / - 72.0 PSF
8'-4"	± 66.4 PSF	-----
8'-8"	± 61.3 PSF	-----
9'-0"	± 56.9 PSF	-----
9'-4"	± 52.9 PSF	-----
9'-8"	± 49.3 PSF	-----
10'-0"	± 46.1 PSF	-----
10'-4"	± 43.2 PSF	-----
10'-8"	± 40.5 PSF	-----
11'-0"	± 38.1 PSF	-----
11'-4"	± 35.9 PSF	-----
11'-8"	± 33.9 PSF	-----
12'-0"	± 32.0 PSF	-----
12'-4"	± 30.3 PSF	-----
12'-8"	± 28.7 PSF	-----
13'-0"	± 27.3 PSF	-----
13'-4"	± 25.9 PSF	-----
13'-8"	± 24.7 PSF	-----
14'-0"	± 23.5 PSF	-----
14'-4"	± 22.4 PSF	-----
14'-8"	± 21.4 PSF	-----
15'-0"	± 20.5 PSF	-----

SPAN SCHEDULE NOTES:

1. SCHEDULE ABOVE GIVES MAXIMUM ALLOWABLE DESIGN PRESSURES AT EACH RESPECTIVE SPAN.
2. THIS SCHEDULE IS APPLICABLE TO ONLY THOSE COMBINATIONS OF MOUNTING CONDITIONS SHOWN IN THIS SECTION.
3. WHERE THESE MOUNTING CONDITIONS ARE COMBINED WITH OTHERS SHOWN ELSEWHERE HEREIN, THE LESSER ALLOWABLE DESIGN PRESSURE AND SPAN SHALL GOVERN.

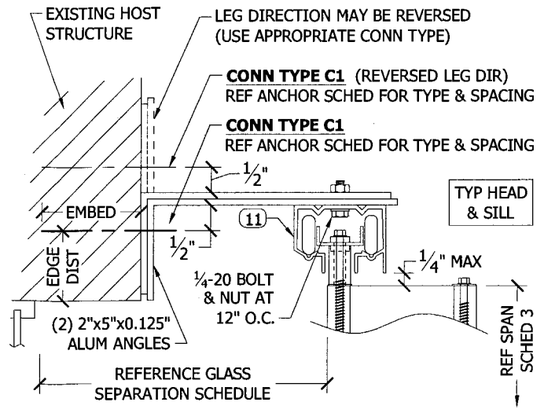

4/5 BUILDOUT 2x5 (2x STANDARD) + CEILING TRACK

SCALE: 4" = 1'-0" MOUNTING SECTION

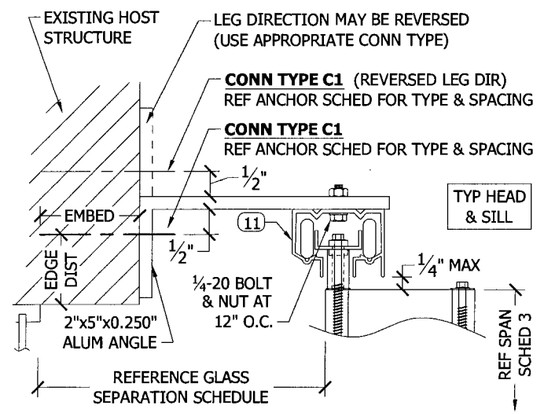

5/5 BUILDOUT 2x5 (HEAVY) + CEILING TRACK

SCALE: 4" = 1'-0" MOUNTING SECTION

SPAN SCHEDULE 3

APPLICABLE TO ALL MOUNTING CONDITIONS ON THIS SHEET

BLADE SPAN	ALLOWABLE DESIGN WIND PRESSURE	
	ALL ALUM BLADES	POLYCARB BLADES
4'-0"	±144.0 PSF	+132.8 / -144.0 PSF
4'-6"	±128.0 PSF	+118.0 / -128.0 PSF
5'-0"	±115.2 PSF	+106.2 / -115.2 PSF
5'-6"	±104.7 PSF	+ 96.6 / -104.7 PSF
6'-0"	± 96.0 PSF	+ 88.5 / - 96.0 PSF
6'-4"	± 90.9 PSF	+ 83.9 / - 90.9 PSF
6'-8"	± 86.4 PSF	+ 79.7 / - 86.4 PSF
7'-0"	± 82.3 PSF	+ 75.9 / - 82.3 PSF
7'-4"	± 78.5 PSF	+ 72.4 / - 78.5 PSF
7'-8"	± 75.1 PSF	+ 69.3 / - 75.1 PSF
8'-0"	± 72.0 PSF	+ 66.4 / - 72.0 PSF
8'-4"	± 68.1 PSF	-----
8'-8"	± 64.5 PSF	-----
9'-0"	± 61.1 PSF	-----
9'-4"	± 58.0 PSF	-----
9'-8"	± 55.2 PSF	-----
10'-0"	± 52.5 PSF	-----
10'-4"	± 49.9 PSF	-----
10'-8"	± 47.6 PSF	-----
11'-0"	± 45.4 PSF	-----
11'-4"	± 44.0 PSF	-----
11'-8"	± 42.8 PSF	-----
12'-0"	± 41.6 PSF	-----
12'-4"	± 40.5 PSF	-----
12'-8"	± 39.4 PSF	-----
13'-0"	± 38.4 PSF	-----
13'-4"	± 35.9 PSF	-----
13'-8"	± 32.5 PSF	-----
14'-0"	± 29.6 PSF	-----
14'-4"	± 26.9 PSF	-----
14'-8"	± 24.5 PSF	-----
15'-0"	± 22.4 PSF	-----

SPAN SCHEDULE NOTES:

1. SCHEDULE ABOVE GIVES MAXIMUM ALLOWABLE DESIGN PRESSURES AT EACH RESPECTIVE SPAN.
2. THIS SCHEDULE IS APPLICABLE TO ONLY THOSE COMBINATIONS OF MOUNTING CONDITIONS SHOWN IN THIS SECTION.
3. WHERE THESE MOUNTING CONDITIONS ARE COMBINED WITH OTHERS SHOWN ELSEWHERE HEREIN, THE LESSER ALLOWABLE DESIGN PRESSURE AND SPAN SHALL GOVERN.

PRODUCT REVISED
as complying with the Florida Building Code
Acceptance No 10-0908.24
Expiration Date 06/23/2015
By
Miami Dade Product Control Division

C.A. #28511
NU-WIND ENGINEERING
UNIQUE PROBLEMS ... STANDARD SOLUTIONS
1200 N FEDERAL HWY, #200
BOCA RATON, FL 33432
Ofc: (954) 333-8965
Fax: (954) 719-3707
www.nu-wind.com
Aug 31 2010
CHRISTIAN LANGLEY, PE
FL PE #67382 CA #28511

REVISIONS DATE	DESCRIPTION	BY
8/30/10	INITIAL SUBMITTAL	CL
-	-	-
-	-	-
-	-	-
-	-	-

PRODUCT
HT-100 ACCORDION SHUTTER
MIAMI-DADE BCCO NOTICE OF ACCEPTANCE

MANUFACTURER
EZ HOME REMODELING
18505 SW 104 AVE, #7
CUTLER RIDGE, FL 33157

DRAWING NUMBER: HTS.09003e

SHEET 5 OF 7

clangley 8/31/2010 16:32
HTS.09003_01f Alum-Shutters (e).dwg (Cr: 8/31/2010 16:16)

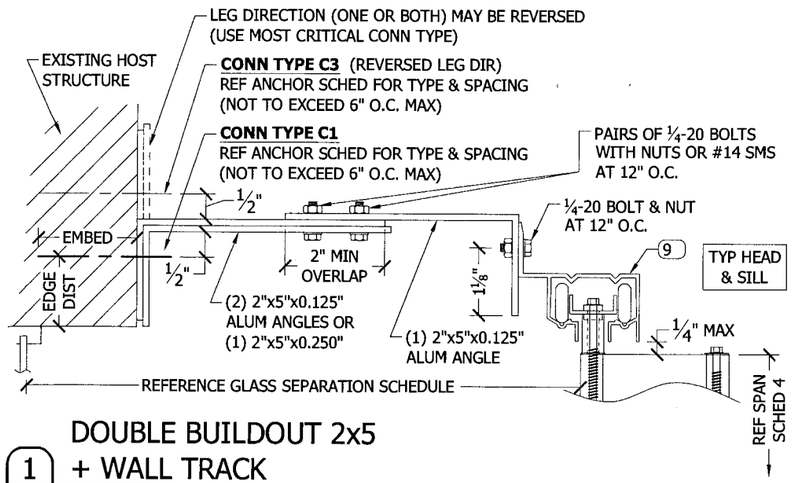

DOUBLE BUILDOUT 2x5 + WALL TRACK

1/6 SCALE: 4" = 1'-0" MOUNTING SECTION

SPAN SCHEDULE 4

APPLICABLE TO ALL MOUNTING CONDITIONS IN THIS SECTION

BLADE SPAN	ALLOWABLE DESIGN WIND PRESSURE	
	ALL ALUM BLADES	POLYCARB BLADES
4'-0"	±150.0 PSF	+132.8 / -144.0 PSF
4'-6"	±133.3 PSF	+118.0 / -128.0 PSF
5'-0"	±120.0 PSF	+106.2 / -115.2 PSF
5'-6"	±109.1 PSF	+ 96.6 / -104.7 PSF
6'-0"	±100.0 PSF	+ 88.5 / - 96.0 PSF
6'-4"	± 94.7 PSF	+ 83.9 / - 90.9 PSF
6'-8"	± 90.0 PSF	+ 79.7 / - 86.4 PSF
7'-0"	± 85.7 PSF	+ 75.9 / - 82.3 PSF
7'-4"	± 81.8 PSF	+ 72.4 / - 78.5 PSF
7'-8"	± 78.3 PSF	+ 69.3 / - 75.1 PSF
8'-0"	± 75.0 PSF	+ 66.4 / - 72.0 PSF
8'-4"	± 69.1 PSF	-----
8'-8"	± 63.9 PSF	-----
9'-0"	± 59.3 PSF	-----
9'-4"	± 55.1 PSF	-----
9'-8"	± 51.4 PSF	-----
10'-0"	± 48.0 PSF	-----
10'-4"	± 45.0 PSF	-----
10'-8"	± 42.2 PSF	-----
11'-0"	± 39.7 PSF	-----
11'-4"	± 37.4 PSF	-----
11'-8"	± 35.3 PSF	-----
12'-0"	± 33.3 PSF	-----
12'-4"	± 31.6 PSF	-----
12'-8"	± 29.9 PSF	-----
13'-0"	± 28.4 PSF	-----
13'-4"	± 27.0 PSF	-----
13'-8"	± 25.7 PSF	-----
14'-0"	± 24.5 PSF	-----
14'-4"	± 23.4 PSF	-----
14'-8"	± 22.3 PSF	-----
15'-0"	± 21.3 PSF	-----

SPAN SCHEDULE NOTES:

1. SCHEDULE GIVES MAXIMUM ALLOWABLE DESIGN PRESSURES AT EACH RESPECTIVE SPAN.
2. THIS SCHEDULE IS APPLICABLE TO ONLY THOSE COMBINATIONS OF MOUNTING CONDITIONS SHOWN IN THIS SECTION.
3. WHERE THESE MOUNTING CONDITIONS ARE COMBINED WITH OTHERS SHOWN ELSEWHERE HEREIN, THE LESSER ALLOWABLE DESIGN PRESSURE AND SPAN SHALL GOVERN.

SUPPORT BEAM AT SHUTTER END

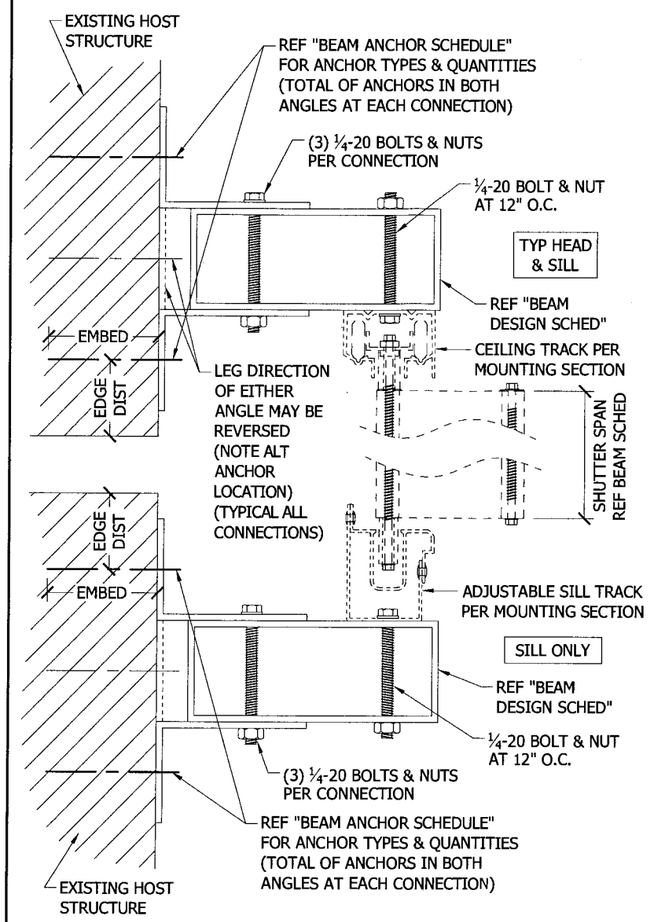

2/6 SUPPORT BEAM AT SHUTTER ENDS

SCALE: 4" = 1'-0" MOUNTING SECTION

BEAM ANCHOR SCHEDULE

CONN TYPE	1/4" ITW TAPCONS TO *CONCRETE* (3192 psi MIN) 1-3/4" MIN EMBED 2-1/2" MIN EDGE DIST 3" MIN SPACING	1/4-20 ALL POINTS SOLID-SET TO *CONCRETE* (3000 psi MIN) 7/8" MIN EMBED 3" MIN EDGE DIST 3" MIN SPACING	1/4" ITW TAPCONS TO *HOLLOW BLOCK* (1500 psi MIN) 1-3/4" MIN EMBED 2-1/2" MIN EDGE DIST 3" MIN SPACING	1/4-20 ALL POINTS SOLID-SET TO *HOLLOW BLOCK* (1800 psi MIN) 7/8" MIN EMBED 3" MIN EDGE DIST 3" MIN SPACING	#14 SCREWS TO *WOOD* (G=0.55 MIN) 2" MIN EMBED 3/4" MIN EDGE DIST 3" MIN SPACING
A	2 PER CONN	2 PER CONN	4 PER CONN	2 PER CONN	2 PER CONN
B	2 PER CONN	2 PER CONN	6 PER CONN	4 PER CONN	4 PER CONN
C	4 PER CONN	4 PER CONN	8 PER CONN	4 PER CONN	4 PER CONN
D	4 PER CONN	4 PER CONN	- - - N/A - - -	6 PER CONN	8 PER CONN

BEAM ANCHOR SCHEDULE NOTES:

1. SCHEDULE GIVES MINIMUM NUMBER OF ANCHORS REQUIRED PER CONNECTION (i.e. TOTAL QUANTITY AT EACH BEAM END).
2. ANCHORS SHALL BE DISTRIBUTED EVENLY BETWEEN THE (2) ANGLES AT EACH CONNECTION.
3. ANCHORS SHALL ALSO BE BALANCED ACROSS THE LENGTH OF EACH ANGLE, WITH ¾" MIN EDGE DISTANCE TO END OF ANGLE.

BEAM DESIGN SCHEDULE

SCHEDULE GIVES MAXIMUM ALLOWABLE DESIGN PRESSURE IN LB/FT² (PSF)

BEAM SPAN	SHUTTER SPAN	2"x3"x⅛" BEAM				2"x5"x⅛" BEAM				2"x8"x⅛" BEAM				2"x9"x⅛" BEAM			
		CONNECTION TYPE				CONNECTION TYPE				CONNECTION TYPE				CONNECTION TYPE			
		A	B	C	D	A	B	C	D	A	B	C	D	A	B	C	D
4 FT	5 FT	125	146	146	146	125	146	146	146	125	146	146	146	125	146	146	146
	6 FT	104	122	122	122	104	122	122	122	104	122	122	122	104	122	122	122
	8 FT	78	91	91	91	78	91	91	91	78	91	91	91	78	91	91	91
	10 FT	62	73	73	73	62	73	73	73	62	73	73	73	62	73	73	73
	12 FT	52	55	55	55	52	55	55	55	52	55	55	55	52	55	55	55
5 FT	5 FT	100	140	140	140	100	146	146	146	100	146	146	146	100	146	146	146
	6 FT	83	117	117	117	83	122	122	122	83	122	122	122	83	122	122	122
	8 FT	62	88	88	88	62	91	91	91	62	91	91	91	62	91	91	91
	10 FT	50	70	70	70	50	73	73	73	50	73	73	73	50	73	73	73
	12 FT	42	55	55	55	42	55	55	55	42	55	55	55	42	55	55	55
6 FT	5 FT	81	81	81	81	83	128	146	146	83	128	146	146	83	128	146	146
	6 FT	68	68	68	68	69	107	122	122	69	107	122	122	69	107	122	122
	8 FT	51	51	51	51	52	80	91	91	52	80	91	91	52	80	91	91
	10 FT	41	41	41	41	42	64	73	73	42	64	73	73	42	64	73	73
	12 FT	34	34	34	34	35	53	55	55	35	53	55	55	35	53	55	55
7 FT	5 FT	51	51	51	51	71	110	142	146	71	110	142	146	71	110	142	146
	6 FT	43	43	43	43	59	91	1- - -	122	59	91	1- - -	122	59	91	1- - -	122
	8 FT	32	32	32	32	45	69	89	91	45	69	89	91	45	69	89	91
	10 FT	26	26	26	26	36	55	71	73	36	55	71	73	36	55	71	73
	12 FT	21	21	21	21	30	46	55	55	30	46	55	55	30	46	55	55
8 FT	5 FT	34	34	34	34	62	96	122	122	62	96	125	146	62	96	125	146
	6 FT	29	29	29	29	52	80	101	101	52	80	104	122	52	80	104	122
	8 FT	21	21	21	21	39	60	76	76	39	60	78	91	39	60	78	91
	10 FT	- - -	- - -	- - -	- - -	31	48	61	61	31	48	62	73	31	48	62	73
	12 FT	- - -	- - -	- - -	- - -	26	40	51	51	26	40	52	55	26	40	52	55
9 FT	5 FT	24	24	24	24	55	85	85	85	55	85	111	146	55	85	111	146
	6 FT	20	20	20	20	46	71	71	71	46	71	92	122	46	71	92	122
	8 FT	- - -	- - -	- - -	- - -	35	53	53	53	35	53	69	91	35	53	69	91
	10 FT	- - -	- - -	- - -	- - -	28	43	43	43	28	43	55	73	28	43	55	73
	12 FT	- - -	- - -	- - -	- - -	23	36	36	36	23	36	46	55	23	36	46	55
10 FT	5 FT	- - -	- - -	- - -	- - -	50	62	62	62	50	77	100	146	50	77	100	146
	6 FT	- - -	- - -	- - -	- - -	42	52	52	52	42	64	83	122	42	64	83	122
	8 FT	- - -	- - -	- - -	- - -	31	39	39	39	31	48	62	91	31	48	62	91
	10 FT	- - -	- - -	- - -	- - -	25	31	31	31	25	38	50	73	25	38	50	73
	12 FT	- - -	- - -	- - -	- - -	21	26	26	26	21	32	42	55	21	32	42	55
12 FT	5 FT	- - -	- - -	- - -	- - -	36	36	36	36	42	64	83	122	42	64	83	138
	6 FT	- - -	- - -	- - -	- - -	30	30	30	30	35	53	69	102	35	53	69	115
	8 FT	- - -	- - -	- - -	- - -	23	23	23	23	26	40	52	76	26	40	52	86
	10 FT	- - -	- - -	- - -	- - -	- - -	- - -	- - -	- - -	21	32	42	61	21	32	42	69
	12 FT	- - -	- - -	- - -	- - -	- - -	- - -	- - -	- - -	- - -	27	35	51	- - -	27	35	55
14 FT	5 FT	- - -	- - -	- - -	- - -	23	23	23	23	36	55	71	82	36	55	71	101
	6 FT	- - -	- - -	- - -	- - -	- - -	- - -	- - -	- - -	30	46	59	68	30	46	59	84
	8 FT	- - -	- - -	- - -	- - -	- - -	- - -	- - -	- - -	22	34	45	51	22	34	45	63
	10 FT	- - -	- - -	- - -	- - -	- - -	- - -	- - -	- - -	- - -	27	36	41	- - -	27	36	51
	12 FT	- - -	- - -	- - -	- - -	- - -	- - -	- - -	- - -	- - -	23	30	34	- - -	23	30	42

REFER TO SPAN SCHEDULES FOR MAX ALLOWABLE SHUTTER SPANS AND PRESSURES

BEAM DESIGN SCHEDULE NOTES:

1. SCHEDULE GIVES MAXIMUM ALLOWABLE DESIGN PRESSURES AT EACH RESPECTIVE BEAM SPAN AND SHUTTER SPAN.
2. THIS SCHEDULE IS APPLICABLE TO ONLY THOSE COMBINATIONS OF MOUNTING CONDITIONS SHOWN IN THIS SECTION.
3. SHUTTER SPANS AND ALLOWABLE DESIGN PRESSURES SHALL BE LIMITED TO THOSE PROVIDED IN APPROPRIATE SPAN SCHEDULE(S).

PRODUCT REVISED
as complying with the Florida Building Code
Acceptance No 10-0908.24
Expiration Date 06/23/2015
By Helen A. Klein
Miami Dade Product Control Division

C.A. #28511
NU-WIND ENGINEERING
UNIQUE PROBLEMS ... STANDARD SOLUTIONS
1200 N FEDERAL HWY, #200
BOCA RATON, FL 33432
www.nu-wind.com
Ofc: (954) 333-8965
Fax: (954) 719-3707
CHRISTIAN LANGLEY, PE
FL PE #67382 CA #28511

Aug 31, 2010

REVISIONS			
REV	DATE	DESCRIPTION	BY
1	8/30/10	INITIAL SUBMITTAL	CL
-	-	-	-
-	-	-	-
-	-	-	-
-	-	-	-

HT-100 ACCORDION SHUTTER
MIAMI-DADE BCCO NOTICE OF ACCEPTANCE
PRODUCT

EZ HOME REMODELING
18505 SW 104 AVE, #7
CUTLER RIDGE, FL 33157
MANUFACTURER

DRAWING NUMBER: HTS.09003e

SHEET 6 OF 7

clangley 8/31/2010 16:32
HTS.09003_01f Alum-Shutters (e).dwg (Cr: 8/31/2010 16:16)

ANCHOR SCHEDULES:

HOST STRUCT. & STRENGTH	ANCHOR	LOAD (PSF)	SPANS UP TO 6'-0" CONN TYPE C1	C2	C3	C4	C5	SPANS UP TO 8'-8" CONN TYPE C1	C2	C3	C4	C5	SPANS UP TO 15'-0" CONN TYPE C1	C2	C3	C4	C5
CONCRETE 3192 PSI	¼" ITW TAPCON (ATT) MIN EMBED: 1.75" MIN EDGE DIST: 3"	45	12.0"	12.0"	12.0"	12.0"	12.0"	12.0"	12.0"	12.0"	9.6"	12.0"	12.0"	12.0"	7.3"	5.3"	6.3"
		57	12.0"	12.0"	12.0"	11.2"	12.0"	12.0"	12.0"	12.0"	7.4"	12.0"	12.0"	12.0"	6.5"	4.8"	5.4"
		73	12.0"	12.0"	12.0"	8.5"	12.0"	12.0"	12.0"	8.2"	5.7"	7.3"	12.0"	12.0"	6.5"	4.8"	5.4"
		105	12.0"	12.0"	8.2"	5.7"	7.3"	12.0"	12.0"	6.5"	4.8"	5.4"	12.0"	12.0"	6.5"	4.8"	5.4"
		170	12.0"	12.0"	6.5"	4.8"	5.4"	12.0"	12.0"	6.5"	4.8"	5.4"	12.0"	12.0"	6.5"	4.8"	5.4"
CONCRETE 2700 PSI	¼" ELCO ULTRACON MIN EMBED: 1.75" MIN EDGE DIST: 2.5"	45	12.0"	12.0"	12.0"	12.0"	12.0"	12.0"	12.0"	12.0"	8.7"	12.0"	12.0"	12.0"	6.3"	4.7"	5.7"
		57	12.0"	12.0"	12.0"	10.1"	12.0"	12.0"	12.0"	11.2"	6.6"	11.2"	12.0"	11.5"	5.6"	4.3"	4.8"
		73	12.0"	12.0"	12.0"	7.6"	12.0"	12.0"	12.0"	7.0"	5.1"	6.6"	12.0"	11.5"	5.6"	4.3"	4.8"
		105	12.0"	12.0"	7.1"	5.1"	6.6"	12.0"	11.5"	5.6"	4.3"	4.8"	12.0"	11.5"	5.6"	4.3"	4.8"
		170	12.0"	11.5"	5.6"	4.3"	4.8"	12.0"	11.5"	5.6"	4.3"	4.8"	12.0"	11.5"	5.6"	4.3"	4.8"
CONCRETE 2899 PSI	5/16" ITW TAPCON MIN EMBED: 2.25" MIN EDGE DIST: 3.125"	45	12.0"	12.0"	12.0"	12.0"	12.0"	12.0"	12.0"	12.0"	12.0"	12.0"	12.0"	12.0"	10.5"	8.2"	9.9"
		57	12.0"	12.0"	12.0"	12.0"	12.0"	12.0"	12.0"	12.0"	11.5"	12.0"	12.0"	12.0"	9.2"	7.5"	8.4"
		73	12.0"	12.0"	12.0"	12.0"	12.0"	12.0"	12.0"	11.7"	8.8"	11.5"	12.0"	12.0"	9.2"	7.5"	8.4"
		105	12.0"	12.0"	11.8"	8.8"	11.6"	12.0"	12.0"	9.2"	7.5"	8.4"	12.0"	12.0"	9.2"	7.5"	8.4"
		170	12.0"	12.0"	9.2"	7.5"	8.4"	12.0"	12.0"	9.2"	7.5"	8.4"	12.0"	12.0"	9.2"	7.5"	8.4"
CONCRETE 3500 PSI	5/16" ELCO ULTRACON MIN EMBED: 1.75" MIN EDGE DIST: 3"	45	12.0"	12.0"	12.0"	12.0"	12.0"	12.0"	12.0"	12.0"	12.0"	12.0"	12.0"	12.0"	8.7"	7.1"	8.7"
		57	12.0"	12.0"	12.0"	12.0"	12.0"	12.0"	12.0"	12.0"	10.0"	12.0"	12.0"	12.0"	7.7"	6.5"	7.3"
		73	12.0"	12.0"	12.0"	11.4"	12.0"	12.0"	12.0"	9.7"	7.6"	10.1"	12.0"	12.0"	7.7"	6.5"	7.3"
		105	12.0"	12.0"	9.8"	7.6"	10.2"	12.0"	12.0"	7.7"	6.5"	7.3"	12.0"	12.0"	7.7"	6.5"	7.3"
		170	12.0"	12.0"	7.7"	6.5"	7.3"	12.0"	12.0"	7.7"	6.5"	7.3"	12.0"	12.0"	7.7"	6.5"	7.3"
CONCRETE 3000 PSI	¼-20 ALL POINTS SOLID-SET MIN EMBED: 0.875" MIN EDGE DIST: 3" *	45	12.0"	12.0"	12.0"	12.0"	12.0"	12.0"	12.0"	12.0"	10.2"	12.0"	12.0"	12.0"	7.2"	5.6"	6.8"
		57	12.0"	12.0"	12.0"	11.9"	12.0"	12.0"	12.0"	12.0"	7.8"	12.0"	12.0"	12.0"	6.4"	5.1"	5.7"
		73	12.0"	12.0"	12.0"	9.0"	12.0"	12.0"	12.0"	8.1"	6.0"	7.8"	12.0"	12.0"	6.4"	5.1"	5.7"
		105	12.0"	12.0"	8.1"	6.0"	7.9"	12.0"	12.0"	6.4"	5.1"	5.7"	12.0"	12.0"	6.4"	5.1"	5.7"
		170	12.0"	12.0"	6.4"	5.1"	5.7"	12.0"	12.0"	6.4"	5.1"	5.7"	12.0"	12.0"	6.4"	5.1"	5.7"
HOLLOW BLOCK STD C-90	¼" ITW TAPCON MIN EMBED: 1.25" MIN EDGE DIST: 2.5"	45	12.0"	12.0"	12.0"	6.1"	10.0"	12.0"	12.0"	8.3"	3.9"	6.9"	6.9"	5.4"			
		57	12.0"	12.0"	12.0"	4.6"	7.9"	9.5"	9.5"	4.6"	3.0"	5.4"	6.4"	4.7"			
		73	10.7"	10.7"	6.1"	3.4"	6.1"	7.4"	6.1"			3.1"	6.4"	4.7"			
		105	7.4"	6.2"			3.1"	6.4"	4.7"				6.4"	4.7"			
		170	6.4"	4.7"				6.4"	4.7"				6.4"	4.7"			
HOLLOW BLOCK STD C-90	¼" ELCO ULTRACON MIN EMBED: 1.25" MIN EDGE DIST: 2.5"	45	12.0"	12.0"	12.0"	6.0"	10.6"	10.8"	10.8"	7.4"	3.9"	7.3"	6.2"	4.9"			
		57	12.0"	12.0"	11.8"	4.5"	8.3"	8.5"	8.5"	4.1"		5.8"	5.7"	4.2"			
		73	9.6"	9.6"	5.4"	3.4"	6.5"	6.6"	5.5"			3.1"	5.7"	4.2"			
		105	6.7"	5.5"			3.1"	5.7"	4.2"				5.7"	4.2"			
		170	5.7"	4.2"				5.7"	4.2"				5.7"	4.2"			
HOLLOW BLOCK STD C-90	5/16" ITW TAPCON MIN EMBED: 1.25" MIN EDGE DIST: 4"	45	12.0"	12.0"	12.0"	9.1"	12.0"	12.0"	12.0"	11.1"	5.8"	11.0"	9.3"	7.3"			3.9"
		57	12.0"	12.0"	12.0"	6.8"	12.0"	12.0"	12.0"	6.2"	4.4"	8.7"	8.6"	6.3"			
		73	12.0"	12.0"	8.1"	5.1"	9.8"	9.9"	8.2"	3.9"		4.6"	8.6"	6.3"			
		105	9.9"	8.3"	3.9"		4.7"	8.6"	6.3"				8.6"	6.3"			
		170	8.6"	6.3"				8.6"	6.3"				8.6"	6.3"			
HOLLOW BLOCK STD C-90	5/16" ELCO ULTRACON MIN EMBED: 1.25" MIN EDGE DIST: 3"	45	12.0"	12.0"	12.0"	8.6"	12.0"	12.0"	12.0"	12.0"	5.6"	9.6"	10.1"	7.9"	3.8"		
		57	12.0"	12.0"	12.0"	6.5"	11.0"	12.0"	12.0"	6.7"	4.3"	7.6"	9.3"	6.9"			
		73	12.0"	12.0"	8.8"	4.9"	8.6"	10.8"	8.9"	4.2"		4.3"	9.3"	6.9"			
		105	10.8"	9.0"	4.2"		4.4"	9.3"	6.9"				9.3"	6.9"			
		170	9.3"	6.9"				9.3"	6.9"				9.3"	6.9"			
HOLLOW BLOCK 1800 PSI	¼-20 ALL POINTS SOLID-SET MIN EMBED: 0.875" MIN EDGE DIST: 3" *	45	12.0"	12.0"	12.0"	11.3"	12.0"	12.0"	12.0"	12.0"	7.4"	12.0"	12.0"	11.0"	5.3"	4.0"	4.9"
		57	12.0"	12.0"	12.0"	8.6"	12.0"	12.0"	12.0"	9.3"	5.6"	9.6"	12.0"	9.6"	4.6"	3.7"	4.1"
		73	12.0"	12.0"	12.0"	6.4"	10.8"	12.0"	12.0"	5.9"	4.3"	5.6"	12.0"	9.6"	4.6"	3.7"	4.1"
		105	12.0"	12.0"	5.9"	4.3"	5.7"	12.0"	9.6"	4.6"	3.7"	4.1"	12.0"	9.6"	4.6"	3.7"	4.1"
		170	12.0"	9.6"	4.6"	3.7"	4.1"	12.0"	9.6"	4.6"	3.7"	4.1"	12.0"	9.6"	4.6"	3.7"	4.1"

NOTE: REFER TO SPAN SCHEDULES FOR MAX ALLOWABLE SPANS AND PRESSURES

HOST STRUCT. & STRENGTH	ANCHOR	LOAD (psf)	SPANS UP TO 6'-0" CONN TYPE C1	C2	C3	C4	C5	SPANS UP TO 8'-8" CONN TYPE C1	C2	C3	C4	C5	SPANS UP TO 15'-0" CONN TYPE C1	C2	C3	C4	C5
WOOD G ≥ 0.55	#14 WOOD SCREW MIN EMBED: 1.5" MIN EDGE DIST: 0.75"	45	12.0"	12.0"	12.0"	5.7"	8.2"	12.0"	12.0"	9.9"	3.7"	5.7"	8.3"	6.5"	3.1"	2.1"	2.4"
		57	12.0"	12.0"	12.0"	4.3"	6.5"	11.4"	11.4"	5.5"	2.9"	4.5"	7.7"	5.7"	2.7"	1.9"	2.1"
		73	12.0"	12.0"	7.3"	3.3"	5.0"	8.9"	7.3"	3.5"	2.2"	2.8"	7.7"	5.7"	2.7"	1.9"	2.1"
		105	8.9"	7.4"	3.5"	2.2"	2.8"	7.7"	5.7"	2.7"	1.9"	2.1"	7.7"	5.7"	2.7"	1.9"	2.1"
		170	7.7"	5.7"	2.7"	1.9"	2.1"	7.7"	5.7"	2.7"	1.9"	2.1"	7.7"	5.7"	2.7"	1.9"	2.1"
WOOD G ≥ 0.55	¼" LAG SCREW MIN EMBED: 1.5" MIN EDGE DIST: 0.75" EMBED	45	12.0"	12.0"	12.0"	6.4"	8.1"	12.0"	12.0"	12.0"	4.3"	5.6"	12.0"	10.9"	5.2"	2.4"	2.7"
		57	12.0"	12.0"	12.0"	4.9"	6.4"	12.0"	12.0"	9.2"	3.3"	4.4"	12.0"	9.5"	4.6"	2.2"	2.4"
		73	12.0"	12.0"	12.0"	3.8"	5.0"	12.0"	12.0"	5.8"	2.6"	3.0"	12.0"	9.5"	4.6"	2.2"	2.4"
		105	12.0"	12.0"	5.8"	2.6"	3.0"	12.0"	9.5"	4.6"	2.2"	2.4"	12.0"	9.5"	4.6"	2.2"	2.4"
		170	12.0"	9.5"	4.6"	2.2"	2.4"	12.0"	9.5"	4.6"	2.2"	2.4"	12.0"	9.5"	4.6"	2.2"	2.4"
WOOD G ≥ 0.55	¼" MASONRY SCREW MIN EMBED: 1.5" MIN EDGE DIST: 0.75"	45	12.0"	12.0"	12.0"	6.2"	7.8"	12.0"	12.0"	12.0"	4.1"	5.4"	12.0"	10.1"	4.8"	2.3"	2.6"
		57	12.0"	12.0"	12.0"	4.8"	6.2"	12.0"	12.0"	8.6"	3.2"	4.3"	11.9"	8.8"	4.2"	2.1"	2.3"
		73	12.0"	12.0"	11.2"	3.6"	4.8"	12.0"	11.4"	5.4"	2.5"	2.9"	11.9"	8.8"	4.2"	2.1"	2.3"
		105	12.0"	11.5"	5.4"	2.5"	2.9"	11.9"	8.8"	4.2"	2.1"	2.3"	11.9"	8.8"	4.2"	2.1"	2.3"
		170	11.9"	8.8"	4.2"	2.1"	2.3"	11.9"	8.8"	4.2"	2.1"	2.3"	11.9"	8.8"	4.2"	2.1"	2.3"

NOTE: REFER TO SPAN SCHEDULES FOR MAX ALLOWABLE SPANS AND PRESSURES

ANCHOR NOTES:

1. ANCHORS SHALL BE INSTALLED IN ACCORDANCE WITH MANUFACTURER'S RECOMMENDATIONS.
2. MINIMUM EMBEDMENT AND EDGE DISTANCE SHALL BE AS NOTED IN ANCHOR SCHEDULE.
3. ENSURE MINIMUM 3/4" EDGE DISTANCE FOR ALL ANCHORS TO WOOD FRAMING (i.e. ANCHOR SHALL BE LOCATED IN CENTER OF STUD WHERE FASTENED TO NARROW FACE OF NOMINAL 2x FRAMING).
4. MINIMUM EMBEDMENT AND EDGE DISTANCE EXCLUDES STUCCO, FOAM, BRICK, AND OTHER WALL FINISHES.
5. ANCHOR SCHEDULE APPLIES TO ALL PRODUCTS CERTIFIED HEREIN, BUT ONLY PROVIDES MAXIMUM ALLOWABLE ANCHOR SPACING. MAX ALLOWABLE SPANS AND PRESSURES INDICATED IN SPAN SCHEDULE(S) SHALL APPLY.
6. WHERE HOST STRUCTURE IS WOOD FRAMING, VERIFY THAT FASTENERS ARE INTO ADEQUATE WOOD FRAMING MEMBERS, NOT INTO PLYWOOD (U.N.O.).
7. MACHINE SCREWS SHALL HAVE MINIMUM OF 1/2" ENGAGEMENT OF THREADS IN BASE ANCHOR AND MAY HAVE EITHER A PAN HEAD, TRUSS HEAD, OR WAFER HEAD ("SIDEWALK BOLT") U.N.O.
8. * DESIGNATES REMOVABLE ANCHORS.

GLASS SEPARATION SCHEDULE

BLADE SPAN	POSITIVE PRESSURE	ALUMINUM BLADES ONLY: AT OR BELOW 30 FT ABOVE GRADE	ALUMINUM BLADES ONLY: MORE THAN 30 FT ABOVE GRADE	POLYCARB BLADES (WITH OR WITHOUT ALUM BLADES): AT OR BELOW 30 FT ABOVE GRADE	POLYCARB BLADES (WITH OR WITHOUT ALUM BLADES): MORE THAN 30 FT ABOVE GRADE
5'-0"	45.0 PSF	2 7/8"	1 1/2"	2 1/2"	1 3/8"
	54.0 PSF	2 7/8"	1 1/2"	2 1/2"	1 3/8"
	73.0 PSF	2 7/8"	1 1/2"	2 1/2"	1 3/8"
	105.0 PSF	2 7/8"	1 1/2"	2 1/2"	1 3/8"
	146.4 PSF	2 7/8"	1 1/2"	2 1/2"	1 3/8"
7'-0"	45.0 PSF	2 7/8"	1 5/8"	2 1/2"	1 1/2"
	54.0 PSF	2 7/8"	1 5/8"	2 1/2"	1 1/2"
	73.0 PSF	2 7/8"	1 5/8"	2 1/2"	1 5/8"
	104.6 PSF	2 7/8"	1 3/4"	2 1/2"	1 3/4"
8'-0"	45.0 PSF	2 7/8"	1 5/8"	2 1/2"	1 5/8"
	54.0 PSF	2 7/8"	1 3/4"	2 1/2"	1 3/4"
	73.0 PSF	2 7/8"	1 7/8"	2 1/2"	1 7/8"
	91.4 PSF	2 7/8"	2"		
9'-0"	45.0 PSF	3"	1 7/8"		
	54.0 PSF	3"	1 7/8"		
	73.0 PSF	3"	2 1/8"		
	81.3 PSF	3"	2 1/8"		
10'-0"	45.0 PSF	3"	2"		
	54.0 PSF	3"	2 1/4"		
	73.2 PSF	3"	2 1/2"		
12'-0"	45.0 PSF	3"	2 3/4"		
	54.8 PSF	3"	3"		
15'-0"	22.4 PSF	3"	3"		

GLASS SEPARATION SCHEDULE NOTES:

1. SCHEDULE GIVES MINIMUM REQ'D SEPARATION FROM GLAZING.
2. SEPARATION IS MEASURED FROM GLASS TO NEAREST PART OF SHUTTER ASSEMBLY - REF MOUNTING SECTION DETAILS.
3. WHERE ANY POLYCARB BLADES ARE INCLUDED IN A PARTICULAR SHUTTER ASSEMBLY, USE GLASS SEPARATION UNDER "POLYCARB BLADES".

PRODUCT REVISED
as complying with the Florida Building Code
Acceptance No 10-0908.24
Expiration Date 06/23/2015
By Helena A. Melton
Miami Dade Product Control Division

C.A. #28511
NU-WIND ENGINEERING
UNIQUE PROBLEMS ... STANDARD SOLUTIONS
1200 N FEDERAL HWY, #200
BOCA RATON, FL 33432
www.nu-wind.com
Ofc: (954) 333-8965
Fax: (954) 719-3707
AUG 31 2010
CHRISTIAN LANGLEY, PE
FL PE #67382 C.A.#28511

REVISIONS DATE	DESCRIPTION	BY
8/30/10	INITIAL SUBMITTAL	CL
-	-	-
-	-	-
-	-	-
-	-	-

PRODUCT: HT-100 ACCORDION SHUTTER
MIAMI-DADE BCCO NOTICE OF ACCEPTANCE

MANUFACTURER: EZ HOME REMODELING
18505 SW 104 AVE, #7
CUTLER RIDGE, FL 33157

DRAWING NUMBER: HTS.09003e

SHEET 7 OF 7

clangley 8/31/2010 16:32
HTS.09003_01f Alum-Shutters (e).dwg (Cr: 8/31/2010 16:16)