MIAMI-DADE COUNTY

BUILDING AND NEIGHBORHOOD COMPLIANCE DEPARTMENT (BNC)
BOARD AND CODE ADMINISTRATION DIVISION

MIAMI-DADE COUNTY
PRODUCT CONTROL SECTION
11805 SW 26 Street, Room 208
Miami, Florida 33175-2474
T (786) 315-2590 F (786) 315-2599

NOTICE OF ACCEPTANCE (NOA)

MBCI-Metals Building Components, Inc
14031 West Hardy
Houston, TX 770606

SCOPE:
This NOA is being issued under the applicable rules and regulations governing the use of construction materials. The documentation submitted has been reviewed by Miami-Dade County Product Control Section and accepted by the Board of Rules and Appeals (BORA) to be used in Miami Dade County and other areas where allowed by the Authority Having Jurisdiction (AHJ).

This NOA shall not be valid after the expiration date stated below. The Miami-Dade County Product Control Section (In Miami Dade County) and/or the AHJ (in areas other than Miami Dade County) reserve the right to have this product or material tested for quality assurance purposes. If this product or material fails to perform in the accepted manner, the manufacturer will incur the expense of such testing and the AHJ may immediately revoke, modify, or suspend the use of such product or material within their jurisdiction. BORA reserves the right to revoke this acceptance, if it is determined by Miami-Dade County Product Control Section that this product or material fails to meet the requirements of the applicable building code.

This product is approved as described herein, and has been designed to comply with the Florida Building Code including the High Velocity Hurricane Zone of the Florida Building Code.

DESCRIPTION: MBCI 5V Crimp Panel

RENEWAL of this NOA shall be considered after a renewal application has been filed and there has been no change in the applicable building code negatively affecting the performance of this product.

TERMINATION of this NOA will occur after the expiration date or if there has been a revision or change in the materials, use, and/or manufacture of the product or process. Misuse of this NOA as an endorsement of any product, for sales, advertising or any other purposes shall automatically terminate this NOA. Failure to comply with any section of this NOA shall be cause for termination and removal of NOA.

ADVERTISEMENT: The NOA number preceded by the words Miami-Dade County, Florida, and followed by the expiration date may be displayed in advertising literature. If any portion of the NOA is displayed, then it shall be done in its entirety.

INSPECTION: A copy of this entire NOA shall be provided to the user by the manufacturer or its distributors and shall be available for inspection at the job site at the request of the Building Official.

This renews NOA #08-0317.02 and consists of pages 1 through 7.
The submitted documentation was reviewed by Alex Tigera.

ROOFING ASSEMBLY APPROVAL:

Category:	Roofing
Sub-Category:	Non-Structural Metal Roofing
Materials:	Steel
Fire Classification:	See General Limitations #1
Maximum Design Pressure:	**-146 psf.**

TRADE NAMES OF PRODUCTS MANUFACTURED OR LABELED BY APPLICANT:

Product	Dimensions	Test Specifications	Product Description
5V Crimp Roof Panel	Length : various Width:26 $^{1}/_{8}$" (Coverage width : 24") Thickness : 0.0217	TAS 125	Corrosion resistant, galvalume, performed, standing seam, coated, pre-finished, metal panels.

EVIDENCE SUBMITTED:

Test Agency	Test Identifier	Test Name/Report	Date
Farabaugh Engineering and Testing, Inc.	T139-08	TAS-100	03/13/08
Force Engineering & Testing, Inc.	07-293T-06A-C	TAS-125	01/16/06
Underwriters Laboratories, Inc.	File R8116 Project 97RT4520	Standard Requirements for Metal Roofing Systems Miami-Dade County TAS-125	06/97
Center for Applied Engineering, Inc.	MTS Job No. 257829	Wind Driven Rain Miami-Dade County TAS-100	10/96
Underwriters Laboratories, Inc.	File R11609 Project 01RT10456	UL 580 TAS-125	02/02
PRI Asphalt Technologies, Inc.	MBC-003-02-01	Wind Driven Rain TAS 100	11/01

SYSTEM DESCRIPTION

SYSTEM A-1:	"5V-Crimp" 26 Ga. Metal Panel
Deck Type:	Wood, Non-insulated
Deck Description:	$^{19}/_{32}$" or greater plywood or wood plank.
Slope Range:	2":12" or greater
Maximum Uplift Pressure:	The maximum allowable design pressure for the 24" wide panel shall be **–90 psf. (See General Limitation #2)**

Deck Attachment: In accordance with applicable Building Code, but in no case it shall be less than # 6 x 2" screws or 8d common annular ring shank nails spaced at 6" o. c. In re-roofing, where deck is less than $^{19}/_{32}$" thick (minimum $^{15}/_{32}$") the above attachment method must be in addition to existing attachment.

Underlayment: Minimum underlayment shall be a ASTM D 226 Type II installed with a minimum 4" side-laps and 6" end-laps. Underlayment shall be fastened with corrosion resistant tin-caps and 1¼" annular ring-shank nails, spaced 6" o.c. at all laps and two staggered rows 12" o.c. in the field of the roll.

Valleys: Valley construction shall be in compliance with Roofing Application Standard RAS 133 and with MBCI's current published installation instructions.

Fire Barrier Board: Any approved fire barrier having a current NOA. Refer to a current fire directory listing for fire ratings of this roofing system assembly as well as the location of the fire barrier within the assembly. See Limitation # 1.

Metal Panels and Accessories: Install the "5V-Crimp Panels" including flashings penetrations, valleys, and accessories in compliance MBCI's current, published installation instructions and in compliance with the minimum requirements detailed in Roofing Application Standard RAS 133.

MBCI's "5V-Crimp Panels" shall be installed with a minimum #14 corrosion resistant fasteners with sealing washers of sufficient length to penetrate $^{5}/_{16}$"through the sheathing. Fasteners shall be place in accordance with fastener detail herein as follows:

1. Panel side ribs shall be fastened along side of the panel inside ribs, one fastener at the overlap and one fastener at the underlap. Center panel rib shall be fastened with two fasteners at the each side of center panel.
2. All fasteners at center rib, underlap rib, and overlap rib shall be spaced at a maximum of 36 inches o.c. parallel to the roof slope. See Detail A herein.

5V Crimp Panel
Detail A

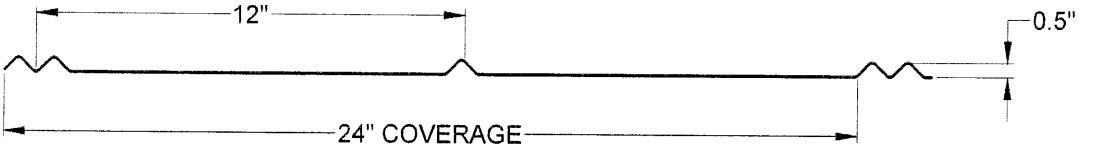

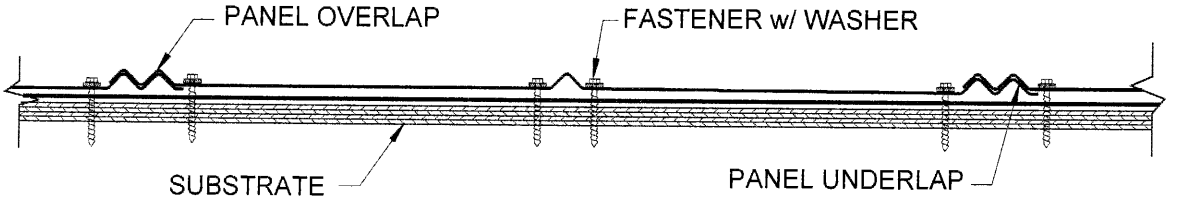

FASTENING PATTERN AT FIELD, EAVE & RIDGE OF PANEL

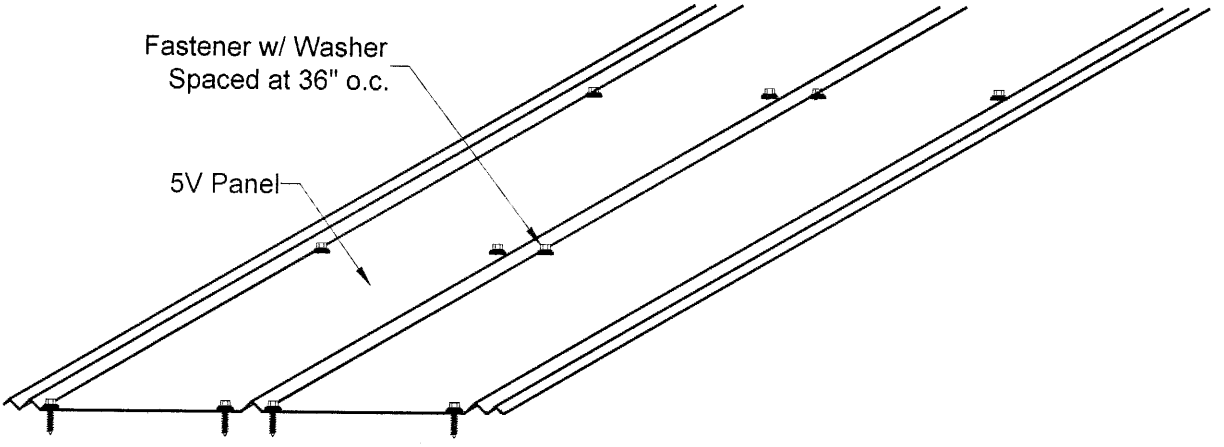

SYSTEM A-2:	"5V-Crimp" 26 Ga. Metal Panel
Deck Type:	Wood, Non-insulated
Deck Description:	$^{19}/_{32}$" or greater plywood or wood plank.
Slope Range:	2":12" or greater
Maximum Uplift Pressure:	**See Table B Below. (See General Limitation #2)**

Deck Attachment: In accordance with applicable Building Code, but in no case it shall be less than # 6 x 2" screws or 8d common annular ring shank nails spaced at 6" o. c. In re-roofing, where deck is less than $^{19}/_{32}$" thick (minimum $^{15}/_{32}$") the above attachment method must be in addition to existing attachment.

Underlayment: Minimum underlayment shall be a ASTM D 226 Type II installed with a minimum 4" side-laps and 6" end-laps. Underlayment shall be fastened with corrosion resistant tin-caps and 1¼" annular ring-shank nails, spaced 6" o.c. at all laps and two staggered rows 12" o.c. in the field of the roll.

Valleys: Valley construction shall be in compliance with Roofing Application Standard RAS 133 and with MBCI's current published installation instructions.

Fire Barrier Board: Any approved fire barrier having a current NOA. Refer to a current fire directory listing for fire ratings of this roofing system assembly as well as the location of the fire barrier within the assembly. See Limitation # 1.

Metal Panels and Accessories: Install the "5V-Crimp Panels" including flashings penetrations, valleys, and accessories in compliance MBCI's current, published installation instructions and in compliance with the minimum requirements detailed in Roofing Application Standard RAS 133.

MBCI's "5V-Crimp Panels" shall be installed with a minimum #10-15 corrosion resistant fasteners with sealing washers of sufficient length to penetrate $^{3}/_{16}$" through the sheathing. Fastener shall be spaced at a maximum of 12" o.c. perpendicular to the slope, in rows spaced as noted below in **Table B** running parallel to the slope of the roof. Fastener shall be placed at high points of panel ribs. See Detail B herein.

TABLE B
MAXIMUM DESIGN PRESSURES

Roof Areas	**Field**	**Perimeter and Corner[1]**
Maximum Design Pressures	**–74.75psf**	**–146 psf**
Maximum Fastener Spacing	**24" o.c.**	**12" o.c.**

1. Extrapolation shall not be allowed

5V Crimp Panel
Detail B

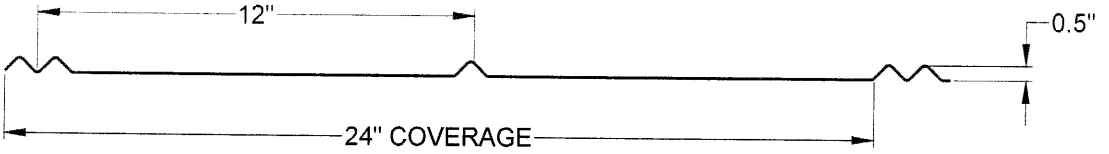

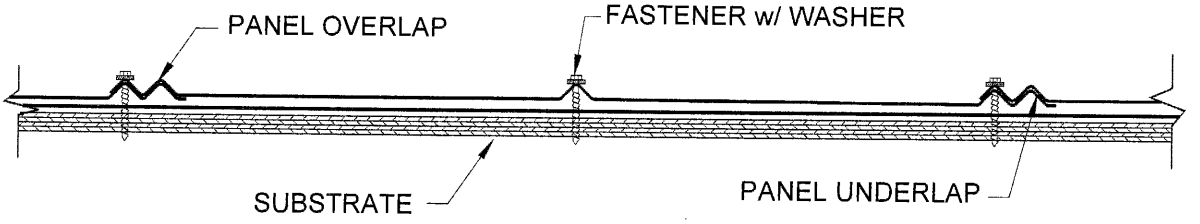

FASTENING PATTERN AT FIELD, EAVE & RIDGE OF PANEL

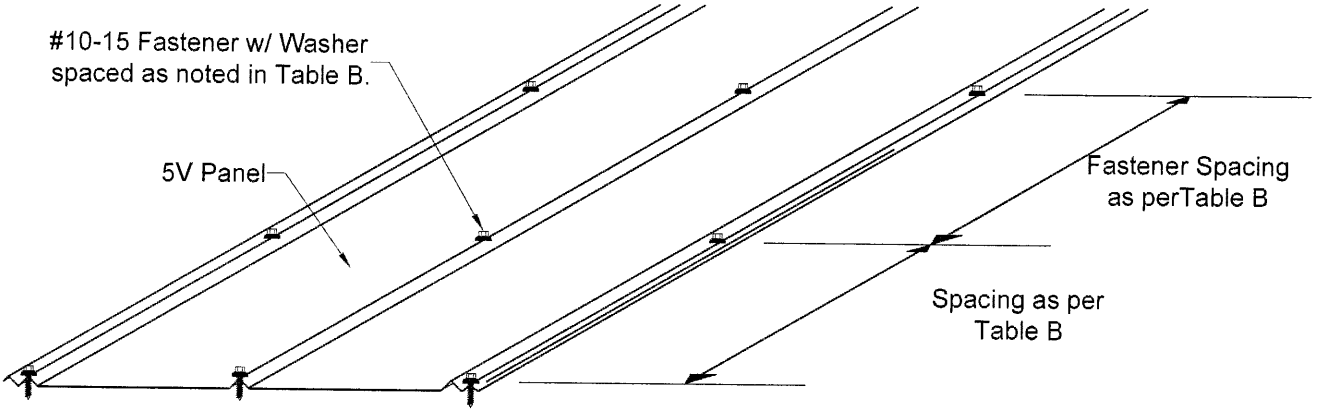

LIMITATIONS

1. Fire classification is not part of this acceptance; refer to a current Approved Roofing Materials Directory for fire ratings of this product.

2. The maximum designed pressure listed herein shall be applicable to all roof pressure zones (i.e. field, perimeters, and corners). Neither rational analysis, nor extrapolation shall be permitted for enhanced fastening at enhanced pressure zones (i.e. perimeters, extended corners and corners).

3. Panels may be rolls formed in continuous lengths from eave to ridge. Maximum lengths shall be as described in Roofing Application Standard RAS 133

4. All panels shall be permanently labeled with the manufacturer's name and/or logo, and the following statement: "Miami-Dade County Product Control Approved" **or** with the Miami-Dade County Product Control Seal as seen below. All clips shall be permanently labeled with the manufacturer's name and/or logo, and/or model.

5. All products listed herein shall have a quality assurance audit in accordance with the Florida Building Code and Rule 9B-72 of the Florida Administrative Code.

END OF THIS ACCEPTANCE