MIAMI-DADE COUNTY

BUILDING AND NEIGHBORHOOD COMPLIANCE DEPARTMENT (BNC)
BOARD AND CODE ADMINISTRATION DIVISION

MIAMI-DADE COUNTY
PRODUCT CONTROL SECTION
11805 SW 26 Street, Room 208
Miami, Florida 33175-2474
T (786) 315-2590 F (786) 315-2599
www.miamidade.gov/building/

NOTICE OF ACCEPTANCE (NOA)

PetersenDean Roofing and Solar Systems, Inc.
1011 Fairfield Drive
West Palm Beach, FL. 33407

SCOPE:

This NOA is being issued under the applicable rules and regulations governing the use of construction materials. The documentation submitted has been reviewed by Miami-Dade County Product Control Section and accepted by the Board of Rules and Appeals (BORA) to be used in Miami Dade County and other areas where allowed by the Authority Having Jurisdiction (AHJ).

This NOA shall not be valid after the expiration date stated below. The Miami-Dade County Product Control Section (In Miami Dade County) and/or the AHJ (in areas other than Miami Dade County) reserve the right to have this product or material tested for quality assurance purposes. If this product or material fails to perform in the accepted manner, the manufacturer will incur the expense of such testing and the AHJ may immediately revoke, modify, or suspend the use of such product or material within their jurisdiction. BORA reserves the right to revoke this acceptance, if it is determined by Miami-Dade County Product Control Section that this product or material fails to meet the requirements of the applicable building code.
This product is approved as described herein, and has been designed to comply with the Florida Building Code including the High Velocity Hurricane Zone of the Florida Building Code.

DESCRIPTION: Riffe Megaloc 2.0 .032 Aluminum Panel over Steel deck

LABELING: Each unit shall bear a permanent label with the manufacturer's name or logo, city, state and following statement: "Miami-Dade County Product Control Approved", unless otherwise noted herein.

RENEWAL of this NOA shall be considered after a renewal application has been filed and there has been no change in the applicable building code negatively affecting the performance of this product.

TERMINATION of this NOA will occur after the expiration date or if there has been a revision or change in the materials, use, and/or manufacture of the product or process. Misuse of this NOA as an endorsement of any product, for sales, advertising or any other purposes shall automatically terminate this NOA. Failure to comply with any section of this NOA shall be cause for termination and removal of NOA.

ADVERTISEMENT: The NOA number preceded by the words Miami-Dade County, Florida, and followed by the expiration date may be displayed in advertising literature. If any portion of the NOA is displayed, then it shall be done in its entirety.

INSPECTION: A copy of this entire NOA shall be provided to the user by the manufacturer or its distributors and shall be available for inspection at the job site at the request of the Building Official.

This NOA consists of pages 1 through 6.
The submitted documentation was reviewed by Alex Tigera.

MIAMI-DADE COUNTY APPROVED

ROOFING SYSTEM APPROVAL:

Category:	Roofing
Sub-Category:	Metal, Panels (Non-Structural)
Material:	Aluminum
Deck Type:	Steel
Maximum Design Pressure	**-166.75 psf**

TRADE NAMES OF PRODUCTS MANUFACTURED OR LABELED BY APPLICANT:

Product	Dimensions	Test Specifications	Product Description
Riffe Megaloc 2.0 Aluminum Panel	Length: various Height: 2" Width: 12" - 18" (coverage) Thickness .032"	TAS 110	Corrosion resistant, 0.032" thick aluminum, preformed, standing seam panels.
Stiffener	Length: various Height: 0.5" Width: 2" Thickness 18 ga		G-90 galvanized, corrosion resistant, 18ga steel stiffener used in Megaloc 2.0 assembly
Riffe Megaloc 2.0 Clip (Butterfly Base)	Length: 4-1/2" Height: 1-1/2" Width: 2" Thickness 18 ga		Two-Piece, G-90 galvanized, corrosion resistant, 18 gauge steel clip base section. Base contains 2 holes.
Riffe Megaloc 2.0 Clip (Butterfly)	Length: 5.045" Height: .930" Width: 0.755" Thickness 22 ga		Two-Piece, G-90 galvanized, corrosion resistant, 22 gauge steel clip top (butterfly) section

EVIDENCE SUBMITTED:

Test Agency	Test Identifier	Test Name/Report	Date
Valspar	Lab Form	ASTM B 117	
Valspar	Lab Form	ASTM G 23	
Fenestration Testing Laboratory, Inc.	10-2076	TAS 100	04/28/10
Hurricane Test Laboratory, Inc.	0527-1210-09	TAS 125	04/07/10

APPROVED ASSEMBLIES:

System:	Riffe Megaloc 2.0 .032 Aluminum Panel 12" - 18" wide
Deck Type:	Steel, Insulated
Deck Description:	Metal roof deck 22 MSG, G60 coated steel. Minimum 33ksi
Slope Range:	2": 12" or greater
Maximum Uplift Pressure:	**See Table A below**

Deck Attachment:	Minimum 22 gage steel deck shall be secured 6" o.c. to structural supports spaced a maximum distance 5' o.c., with one (1) #12 x 1-1/4" Hex Washer Head self drilling screws fastened at the bottom of each flute (6" o.c.). Deck sidelaps shall be fastened 6" o.c. with #12 x 3/4" Hex Head self drilling screws.
Insulation:	Minimum ¾" thick and Maximum 4" thick of an approved rigid board insulation with current NOA having a minimum 25psi compressive strength fastened with approved #14 pancake head screws long enough to penetrate the steel deck through 3" diameter insulation plates. Fastening density shall be in compliance with applicable Building Code and Roofing Application Standard RAS 117.
Underlayment:	Minimum underlayment shall be an ASTM D 226 Type II installed with a minimum 4" side-lap and 6" end-laps. Underlayment shall be fastened with corrosion resistant tin-caps and #14 fasteners long enough to penetrate the deck, spaced 6" o.c. at all laps and two staggered rows 12" o.c. in the field of the roll or any approved underlayment having a current NOA.
Fire Barrier Board:	Any approved fire barrier having a current NOA. Refer to a current fire directory listing for fire ratings of this roofing system assembly as well as the location of the fire barrier within the assembly. See Limitation # 1.
Valleys:	Valley construction shall be in compliance with Roofing Application Standard RAS 133 and with the current published installation instructions and details in Riffe Metals LLC Association, Installation Manual.

Metal Panels and Accessories:

Install the "Riffe Megaloc 2.0 .032 Aluminum Panel" including flashing penetrations, valleys, end laps and accessories in compliance "Riffe Metals LLC Association" current, published installation instructions and in compliance with the minimum requirements detailed in Roofing Application Standard RAS 133.

Each panel includes an inside leg and an outside leg. These legs are overlapped around a clip base/butterfly assembly and a steel stiffener that runs the full length of the roof panels.

Panels shall be secured along the male rib with approved clips and corrosion resistant #14 pancake head fasteners of sufficient length to penetrate through the sheathing a minimum of $^{3}/_{16}$". The number of fasteners per clip is listed below in **Table A**. The panel clips were placed at spacing listed below in **Table A** starting 12" from panel end. The female rib of panel is installed over the male rib of panel. Panels are mechanically seamed 180°.

TABLE A
MAXIMUM DESIGN PRESSURES

Roof Areas	Field	Perimeter and Corner[1]
Maximum Design Pressures	114.25 psf	166.75 psf
Maximum Clip Spacing	24" o.c.	12" o.c.
Fastners per clip	2	3

1. **Extrapolation shall not be allowed**

LIMITATIONS

1. Fire classification is not part of this acceptance; refer to a current Approved Roofing Materials Directory for fire ratings of this product.

2. The maximum designed pressure listed herein shall be applicable to all roof pressure zones (i.e. field, perimeters, and corners). Neither rational analysis, nor extrapolation shall be permitted for enhanced fastening at enhanced pressure zones (i.e. perimeters, extended corners and corners).

3. Panels may be rolls formed in continuous lengths from eave to ridge. Maximum lengths shall be as described in Roofing Application Standard RAS 133

4. All panels shall be permanently labeled with the manufacturer's name and/or logo, and the following statement: "Miami-Dade County Product Control Approved" **or** with the Miami-Dade County Product Control Seal as seen below. All clips shall be permanently labeled with the manufacturer's name and/or logo, and/or model.

MIAMI-DADE COUNTY
APPROVED

5. All products listed herein shall have a quality assurance audit in accordance with the Florida Building Code and Rule 9B-72 of the Florida Administrative Code.

6. Panels may be jobsite roll formed with machine model **# SSQ 08880909** from Riffe Metals LLC.

PROFILE DRAWINGS

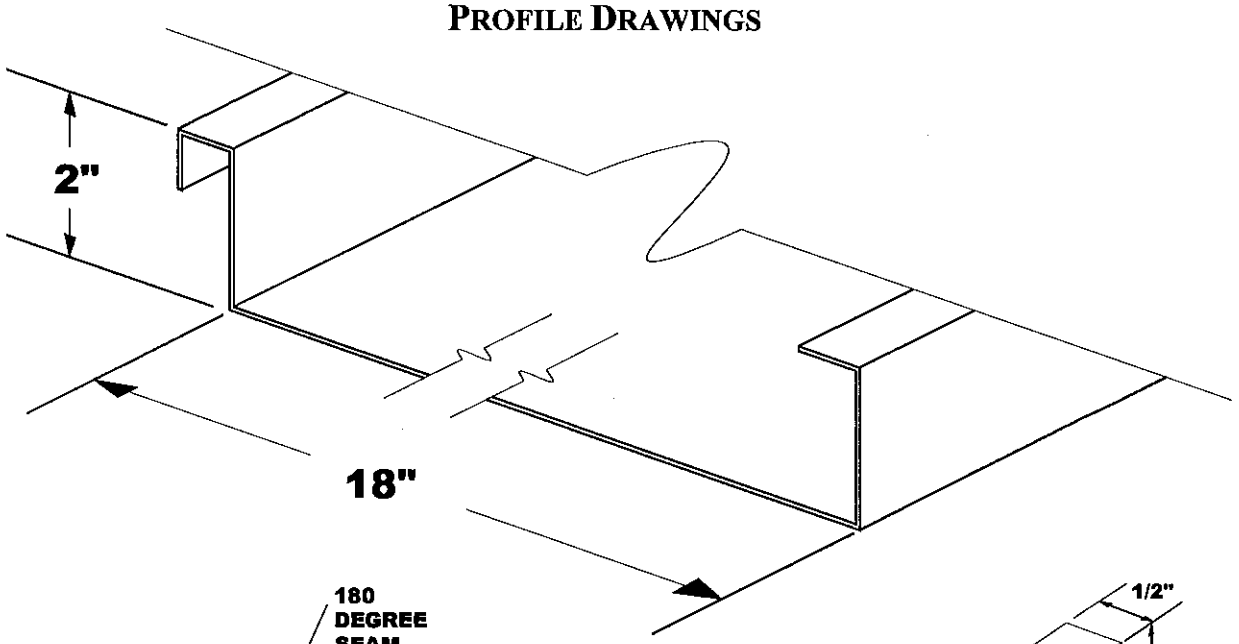

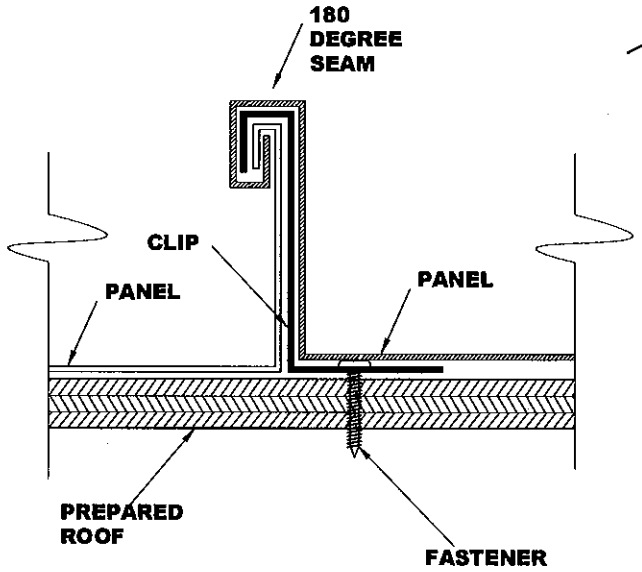

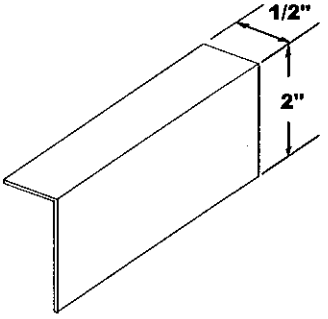

STIFFENER

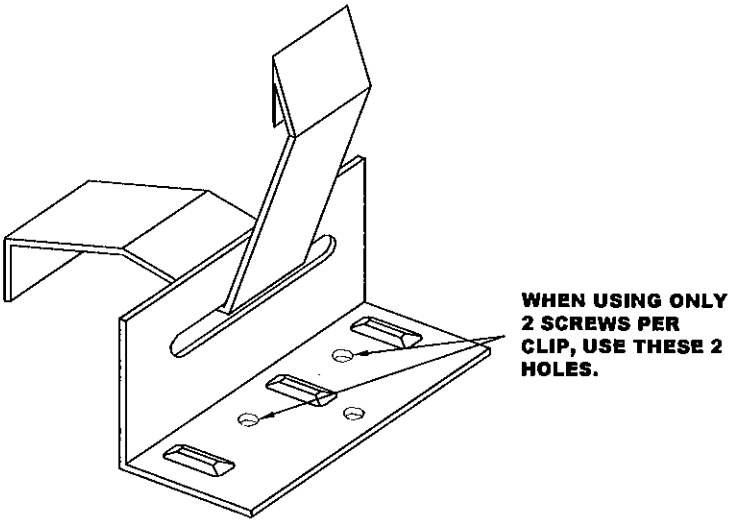

END OF THIS ACCEPTANCE