MIAMI-DADE COUNTY
BUILDING CODE COMPLIANCE OFFICE (BCCO)
PRODUCT CONTROL DIVISION

MIAMI-DADE COUNTY, FLORIDA
METRO-DADE FLAGLER BUILDING

140 WEST FLAGLER STREET, SUITE 1603
MIAMI, FLORIDA 33130-1563
(305) 375-2901 FAX (305) 375-2908
www.miamidade.gov

NOTICE OF ACCEPTANCE (NOA)

Advanced Hurricane Technology, Inc.
6063 Janes Lane
Naples, Fl 34109

SCOPE:
This NOA is being issued under the applicable rules and regulations governing the use of construction materials. The documentation submitted has been reviewed by Miami-Dade County Product Control Division and accepted by the Board of Rules and Appeals (BORA) to be used in Miami Dade County and other areas where allowed by the Authority Having Jurisdiction (AHJ).

This NOA shall not be valid after the expiration date stated below. The Miami-Dade County Product Control Division (In Miami Dade County) and/or the AHJ (in areas other than Miami Dade County) reserve the right to have this product or material tested for quality assurance purposes. If this product or material fails to perform in the accepted manner, the manufacturer will incur the expense of such testing and the AHJ may immediately revoke, modify, or suspend the use of such product or material within their jurisdiction. BORA reserves the right to revoke this acceptance, if it is determined by Miami-Dade County Product Control Division that this product or material fails to meet the requirements of the applicable building code.
This product is approved as described herein, and has been designed to comply with the High Velocity Hurricane Zone of the Florida Building Code.

DESCRIPTION: "AHT Superspan " Impact Rolling Wall System

APPROVAL DOCUMENT: Drawing No. 09-001.1, titled "AHT Superspan Impact Rolling Wall Large and Small Missile Impact Rated", prepared by EngCo, Inc., dated 06/11/10, sheets 1 through 13 of 13, signed and sealed by Pedro De Figueiredo, P.E., bearing the Miami-Dade County Product Control Revision stamp with the Notice of Acceptance number and expiration date by the Miami-Dade County Product Control Division.

MISSILE IMPACT RATING: Large and Small Missile Impact Resistant

LABELING: Each unit shall bear a permanent label with the manufacturer's name or logo, city, state and the following statement: "Miami-Dade County Product Control Approved", unless otherwise noted herein.

RENEWAL of this NOA shall be considered after a renewal application has been filed and there has been no change in the applicable building code negatively affecting the performance of this product.

TERMINATION of this NOA will occur after the expiration date or if there has been a revision or change in the materials, use, and/or manufacture of the product or process. Misuse of this NOA as an endorsement of any product, for sales, advertising or any other purposes shall automatically terminate this NOA. Failure to comply with any section of this NOA shall be cause for termination and removal of NOA.

ADVERTISEMENT: The NOA number preceded by the words Miami-Dade County, Florida, and followed by the expiration date may be displayed in advertising literature. If any portion of the NOA is displayed, then it shall be done in its entirety.

INSPECTION: A copy of this entire NOA shall be provided to the user by the manufacturer or its distributors and shall be available for inspection at the job site at the request of the Building Official.
This NOA **revises NOA #09-0330.05** and consists of this page 1, evidence submitted pages E1 & E-2 and approval document mentioned above.
The submitted documentation was reviewed by **Helmy A. Makar, P.E., M.S.**

MIAMI-DADE COUNTY APPROVED

Helmy A. Makar
11/04/2010

NOA No. 10-0921-04
Expiration Date: 05/06/2014
Approval Date: 11/04/2010

Advanced Hurricane Technology, Inc.

NOTICE OF ACCEPTANCE: EVIDENCE SUBMITTED

1. EVIDENCE SUBMITTED UNDER PREVIOUS APPROVAL #09-0330.05

A. DRAWINGS

Drawing No. 09-001, titled "58 mm Super T Impact Rolling Wall Large and Small Missile Impact Rated" prepared by EngCo, Inc. dated 02/10/09 sheets 1 through 12 of 13 with no revision, signed and sealed on 03/24/09 by Pedro De Figueiredo P.E.

B. TESTS

Fenestration Testing Laboratory, Inc. Report No. 5769,5850 and 5842 sheets 26,3 and 18, dated 12/18/08, 02/02/09 and 01/29/09 respectively, signed and Sealed by Carlos Rionda P.E. for Testing Standards TAS 201, TAS 202 and TAS 203.

C. CALCULATIONS

1.Structural calculations and design for Slat, Track Anchorage, Track Assembly Screws, Header, Mullion Storm Bars and analysis of test results prepared by EngCo, Inc. dated, 03/24/09, signed and sealed by Pedro De Figueiredo P.E.,

D. MATERIAL CERTIFICATIONS

None

E. STATEMENTS

1. *Code Compliance and no financial interest letter by EngCo Inc .signed and sealed on 03/30/09 by Pedro De Figueiredo, P.E.*

F. QUALITY ASSURANCE

1. *Miami-Dade County Building Code Compliance Office.*

2. NEW EVIDENCE SUBMITTED

A. DRAWINGS

1. *Drawing No. 09-001.1, titled "AHT Superspan Impact Rolling Wall Large and Small Missile Impact Rated", prepared by EngCo, Inc., dated 06/11/10, sheets 1 through 13 of 13, signed and sealed by Pedro De Figueiredo, P.E.*

B. TESTS

1. *None.*

C. CALCULATIONS

1. *None.*

Helmy A. Makar, P.E., M.S.
Senior Product Control Examiner
NOA No. 10-0921-04
Expiration Date: 05/06/2014
Approval Date: 11/04/2010

NOTICE OF ACCEPTANCE: EVIDENCE SUBMITTED

D. QUALITY ASSURANCE

1. *By Miami-Dade County Building Code Compliance Office.*

E. MATERIAL CERTIFICATIONS

1. *None*

F. STATEMENTS

1. *Code Compliance and no financial interest letter by EngCo Inc., signed and sealed on 06/22/10 by Pedro De Figueiredo, P.E.*

Hemy A. Makar, P.E., M.S.
Senior Product Control Examiner
NOA No. 10-0921-04
Expiration Date: 05/06/2014
Approval Date: 11/04/2010

DESIGN SCHEDULE	
COMPONENT	SHEET
SLAT ALLOWABLE PRESSURE - TABLE 1	1
GLASS SEPARATION - TABLE 2	1
TRACK REACTION - TABLE 3	1
TRACK ANCHORAGE	3, 4, 5 & 6
STORM BARS	7, 8, 9 & 10
MULLION	11 & 12

NOTES:
1- ALLOWABLE DESIGNED PRESSURE ARE FUNCTION OF THE LOWEST ALLOWABLE DESIGNED LOAD FOR EACH COMPONENT (SLATS, ANCHORAGE, STORM BARS & MULLIONS)
2- DESIGNED PRESSURES MUST NOT EXCEED 200 PSF.
3- FINISHED WIDTH (FW) MUST NOT EXCEED 294-3/8".

GENERAL NOTES: (FLORIDA BUILDING CODE 2007 - HVHZ & non HVHZ)

1- DEFINITION: THIS PRODUCT IS A ROLLING BARRIER WALL; DESIGNED, CONSTRUCTED AND ERECTED TO EASILY ENCLOSE AN AREA, PROVIDING PROTECTION FROM HURRICANE FORCE WINDS AND WIND BORNE DEBRIS WITHIN THE ALLOWABLE DESIGNED PRESSURES AND LIMITATIONS STATED IN THIS APPROVAL.

2- POSTING: A PERMANENT LABEL SHALL BE PROVIDED AS PER FBC 2007 SECTION 1714. 8.
2. 1- LOCATION: SHALL BE PLACED ON THE BOTTOM OF THE HOOD FACING THE EXTERIOR OR OUTSIDE OR ON THE BOTTOM SLAT FACING THE EXTERIOR OR OUTSIDE
2. 2- INFORMATION STATING THE FOLLOWING:

"ADVANCED HURRICANE TECHNOLOGIES
NAPLES - FLORIDA
MIAMI-DADE COUNTY PRODUCT APPROVED"

3- LIMITATION: PRODUCT MUST BE SET AWAY, A DISTANCE AS SPECIFIED ON TABLE 1, FROM GLAZING AREAS TO BE PROTECTED

4- LOADS: DESIGNED LOAD CALCULATED BASED ON THE ASCE 7 AND PROVIDED BY A PROFESSIONAL ARCHITECT OR ENGINEER FOR EACH SPECIFIC PROJECT. THE CALCULATED DESIGNED PRESSURE MUST NOT EXCEED THE ALLOWABLE PRESSURES FOR EACH PRODUCT COMPONENT TO BE USED.

5- MATERIAL: ALL EXTRUDED ALUMINUM SHAPES SHALL BE MADE OF 6063-T6 OR AS NOTED.

6- FASTENERS: ASSEMBLY SCREWS AND ANCHORS SHALL BE AS SPECIFIED IN THE CURRENT SET OF DRAWINGS. INSTALLATION AND LOADS AS PER THIS APPROVAL.

7- USE: IT SHALL BE THE RESPONSIBILITY OF THE CONTRACTOR, ARCHITECT OR ENGINEER OF RECORD TO VERIFY THE FOLLOWING:
7. 1- THE STABILITY OF THE STRUCTURE WHERE THE PRODUCT IS TO BE ATTACHED INSURING PROPER ANCHORAGE.
7. 2- THE SITE SPECIFIC PROJECT CRITERIA, SUCH AS BUT NOT LIMITED TO, WIND LOADS, LOCAL CODE REQUIREMENTS, DESIGNED PRESSURES ETC.
7. 3- THAT THIS APPROVAL IS ADEQUATE TO THE SPECIFIC PROJECT.

8- 33 1/3% INCREASE IN ALLOWABLE LOADS HAVE NOT BEEN USED IN THE DESIGN OF THE ANCHORS FOR THIS PRODUCT APPROVAL.

TABLE 1
ALLOWABLE DESIGNED PRESSURE

FW MAX. (IN)	TT MAX. (IN)	DESIGN RATING (PSF)
294 3/8	285 3/8	±30
273	264	±33
249	240	±38
225	216	±44
201	192	±51
177	168	±62
153	144	±75
141	132	±86
129	120	±98
117	108	±113
105	96	±133
93	84	±160
81	72	±200

TABLE 2
GLASS SEPARATION (GS) - INCHES

LOAD	TRACK TO TRACK (IN)						
PSF	72	84	96	108	144	216	285 3/8
30	1 7/8	3	4 3/8	6 3/4	9 3/4	11 5/8	19
40	2	3 5/8	5 5/8	7 3/4	9 7/8	15 1/4	
44	2	3 7/8	6	7 7/8	10 1/8	16 7/8	
50	2 1/8	4 1/4	6 3/4	8 1/8	10 3/8		
60	2 3/8	4 7/8	7 3/8	8 5/8	11 1/8		
70	2 3/4	5 1/2	7 3/4	9	11 5/8		
75	3	5 7/8	8	9 1/4	12 1/8		
80	3 1/4	6 1/8	8 1/8	9 1/2			
90	3 5/8	6 7/8	8 5/8	9 7/8			
100	4 3/8	7 1/4	9	10 1/8			
110	4 7/8	7 5/8	9 1/4	10 1/2			
113	5	7 5/8	9 1/4	10 5/8			
120	5 1/2	8	9 1/2				
130	5 7/8	8 1/8	9 3/4				
133	6	8 1/4	9 3/4				
140	6 1/4	8 3/8					
150	6 3/8	8 1/2					
160	6 1/2	8 3/4					
170	6 5/8						
180	6 7/8						
190	7 1/8						
200	7 1/4						

TABLE 3 - TRACK REACTION (LB/FT)

LOAD	TRACK TO TRACK (TT)													
	72		84		96		108		144		216		285	
psf	VX	VY	VX	VY	VX	VY	VX	VY	VX	VY	VX	VY	VX	VY
30	0	94	0	109	0	124	0	139	504	184	1288	274	1373	361
40	0	125	0	145	0	165	89	185	736	245	1286	365		
44	0	138	0	160	0	182	142	204	811	270	1250	399		
50	0	157	0	182	0	207	223	232	924	307				
60	0	188	0	218	71	248	341	278	1056	368				
70	0	220	0	255	165	290	447	325	1213	430				
75	0	235	0	273	207	310	494	348	1246	460				
80	0	251	0	291	249	331	542	371						
90	0	282	0	327	325	372	635	417						
100	0	314	53	364	393	414	730	464						
110	0	345	103	400	478	455	818	510						
113	0	354	117	411	502	467	846	526						
120	0	376	149	437	558	496								
130	0	408	220	473	634	538								
133	0	417	240	484	658	552								
140	0	439	288	509										
150	12	471	353	546										
160	69	502	416	583										
170	119	533												
180	158	565												
190	195	596												
200	253	627												

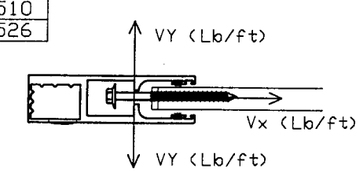

CONTRACTOR TO VERIFY ADEQUACY OF STRUCTURE FOR MAXIMUM IMPOSED LOADS VY AND Vx

CODE AND STANDARD COMPLIANCE:
FLORIDA BUILDING CODE 2007 (HVHZ & non HVHZ)
TAS 201, 202, 203 (LARGE & SMALL MISSILE)

ADVANCED HURRICANE TECHNOLOGIES
2409 J&C BLVD.
NAPLES, FLORIDA
34109
Phone: (239) 260-0020
Fax: (239) 260-0023

PRODUCT:
AHT SUPERSPAN
IMPACT ROLLING WALL
LARGE & SMALL MISSILE
IMPACT RATED

Engineering:
EngCo Inc.
CA 8116
6971 W. Sunrise Blvd. 104
Plantation, Fl. 33313
ENGCO@AOL.COM

PEDRO DE FIGUEIREDO LICENSE No. 52609 STATE OF FLORIDA PROFESSIONAL ENGINEER
JUN 22 2010
Engineer Seal
Pedro De Figueiredo
PE 52609

DRAFTING:
PK DRAFTING & MORE

MIAMI-DADE BCCO:

PRODUCT REVISED
as complying with the Florida Building Code
Acceptance No 10-0921.04
Expiration Date 05/06/2014
By
Miami Dade Product Control Division

Date: 06/11/2010
Scale: NA
Design by: PPMF

Drawing Number
09-001.1

TYPICAL SINGLE UNIT ELEVATION

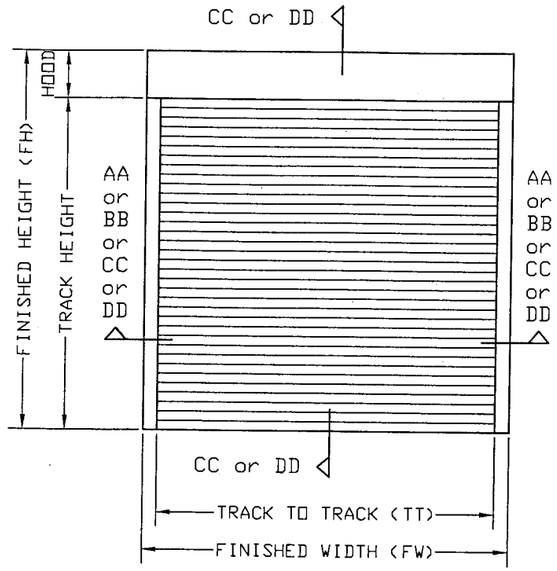

TYPICAL MULTIPLE SPANS ELEVATION
WITH INSIDE STORM BAR ONLY

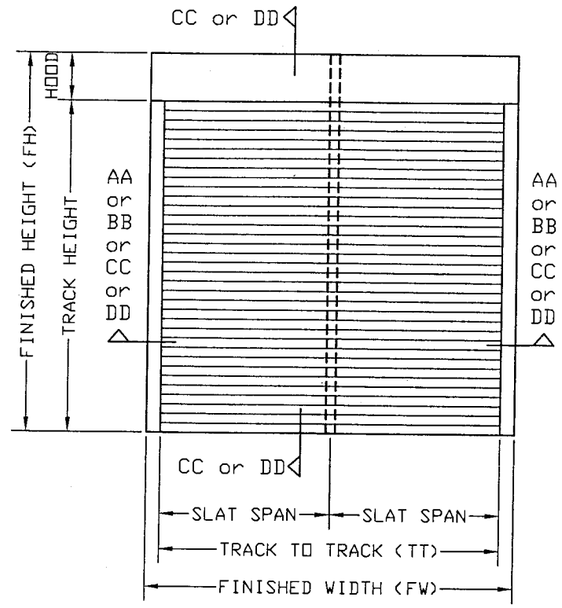

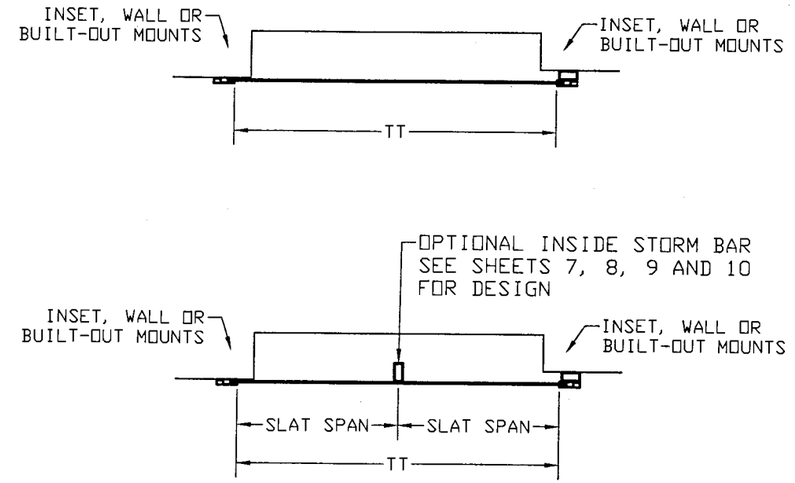

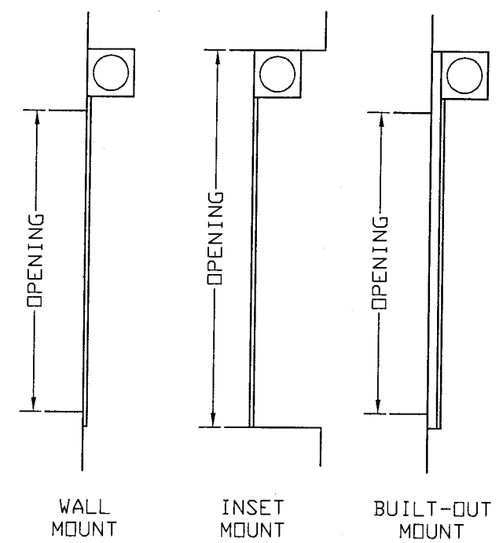

TYPICAL MULTIPLE UNITS ELEVATION

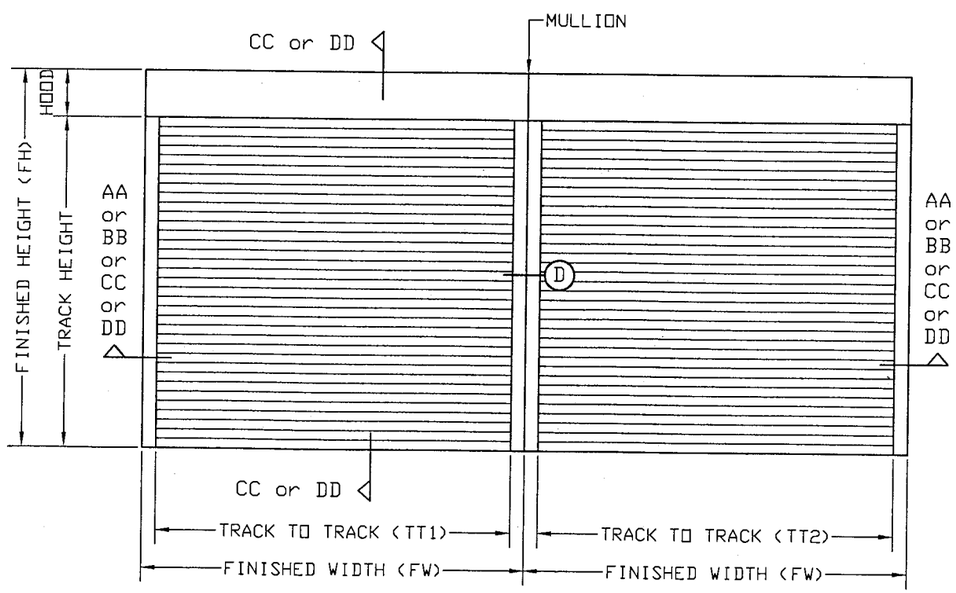

TT1 = TT2

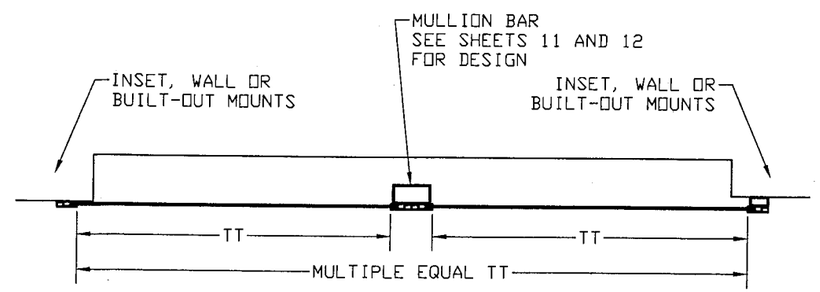

ADVANCED HURRICANE TECHNOLOGIES

2409 J&C BLVD.
NAPLES, FLORIDA
34109
Phone: (239) 260-0020
Fax: (239) 260-0023

PRODUCT:
AHT SUPERSPAN
IMPACT ROLLING WALL
LARGE & SMALL MISSILE
IMPACT RATED

Engineering:
EngCo Inc.
CA 8116
6971 W. Sunrise Blvd. 104
Plantation, Fl. 33313
ENGCO@AOL.COM

PEDRO M. FIGUEIREDO
LICENSE
No. 52609
STATE OF
PROFESSIONAL ENGINEER
JUN 22 2010
Engineer Seal
Pedro De Figueiredo
PE 52609

DRAFTING:
PK DRAFTING & MORE

MIAMI-DADE BCCO:

PRODUCT REVISED
as complying with the Florida
Building Code
Acceptance No 10-0921.04
Expiration Date 05/06/2014
By Helena A. Molina
Miami Dade Product Control
Division

Date: 06/11/2010
Scale: NA
Design by: PPMF

Drawing Number
09-001.1

TYPICAL VERTICAL SECTIONS

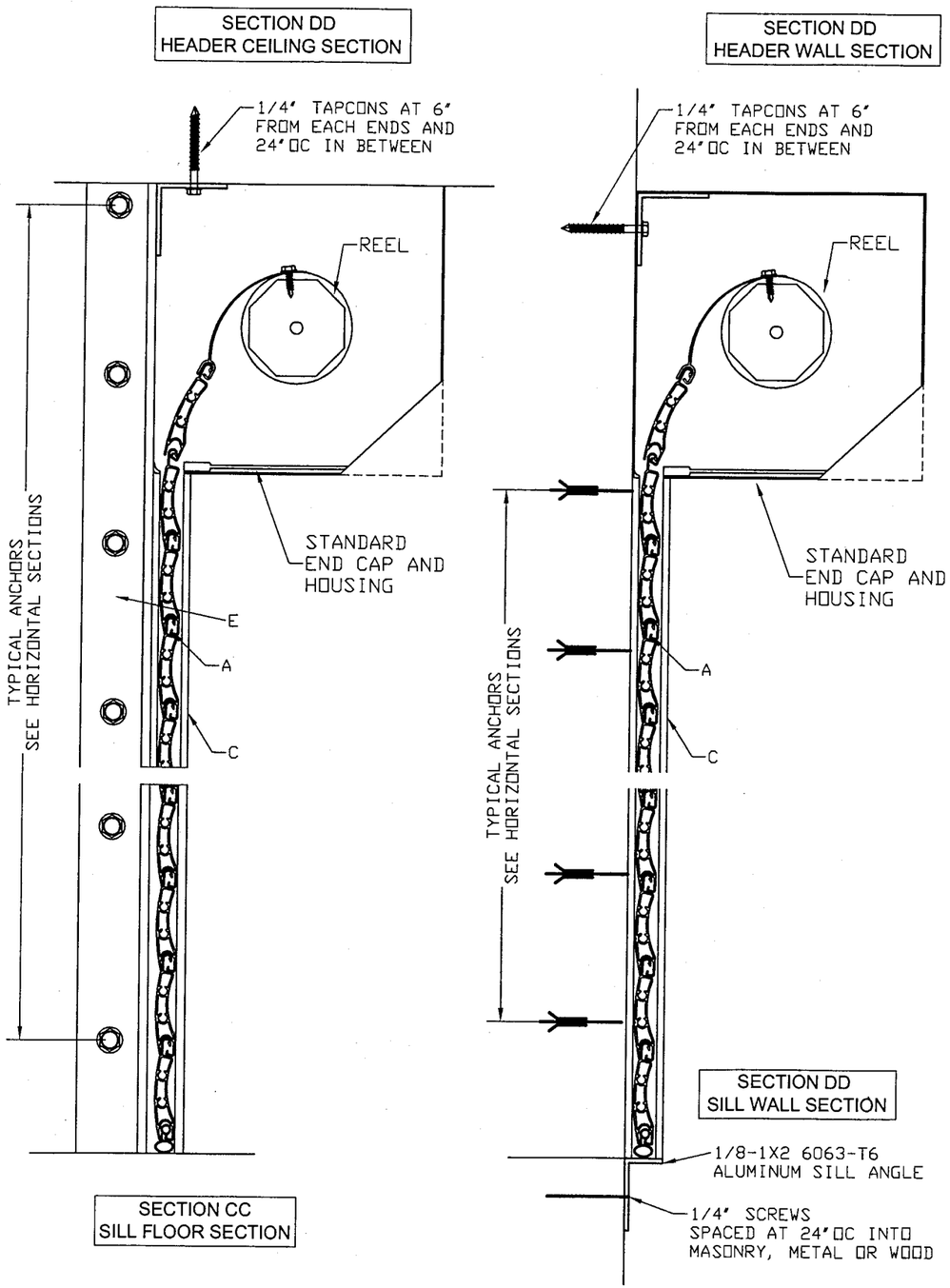

SLAT END RETENTION LAY-OUT

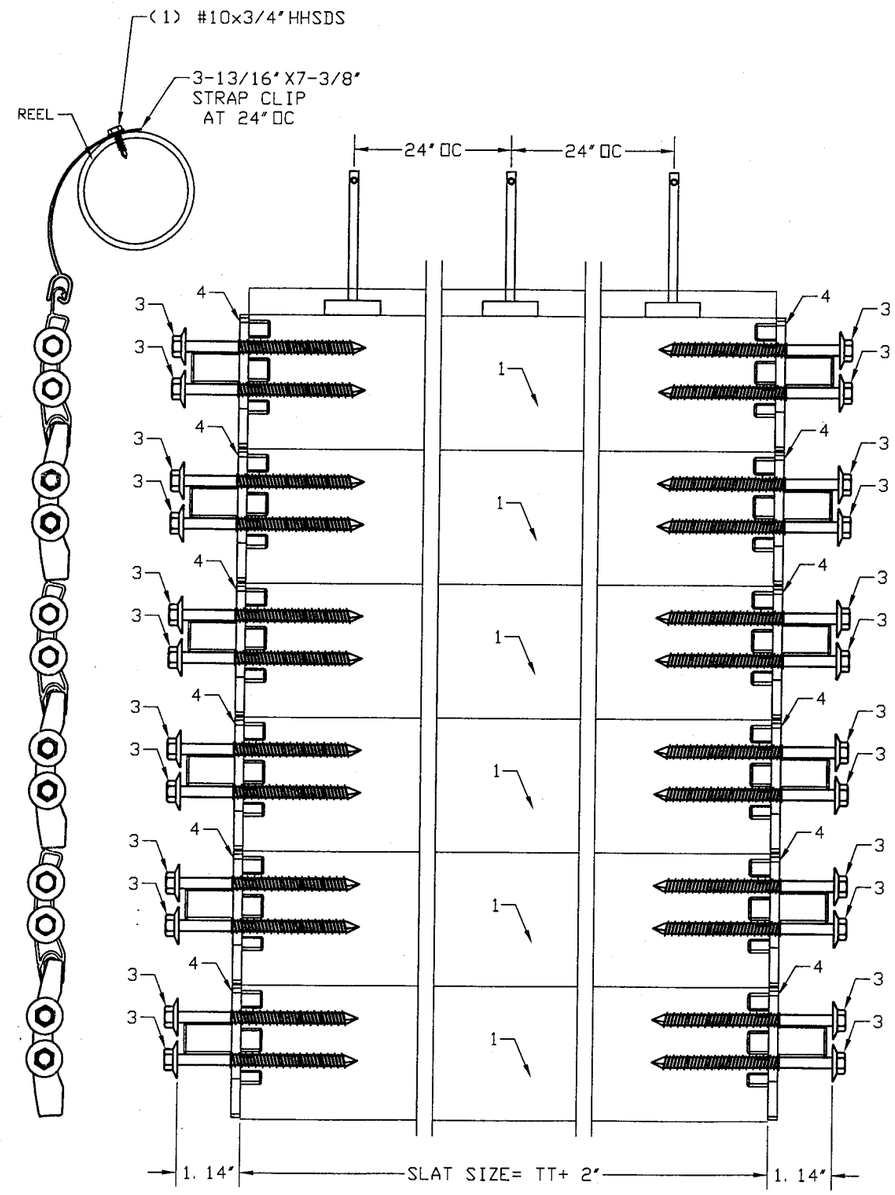

ADVANCED HURRICANE TECHNOLOGIES

2409 J&C BLVD.
NAPLES, FLORIDA
34109
Phone: (239) 260-0020
Fax: (239) 260-0023

PRODUCT:
AHT SUPERSPAN
IMPACT ROLLING WALL
LARGE & SMALL MISSILE
IMPACT RATED

Engineering:
EngCo Inc.
CA 8116
6971 W. Sunrise Blvd. 104
Plantation, Fl. 33313
ENGCO@AOL.COM

PEDRO M. DE FIGUEIREDO
LICENSE
No. 52609
STATE OF FLORIDA
PROFESSIONAL ENGINEER

JUN 22 2010

Engineer Seal
Pedro De Figueiredo
PE 52609

DRAFTING:
PK DRAFTING & MORE

MIAMI-DADE BCCO:

PRODUCT REVISED
as complying with the Florida Building Code
Acceptance No 10-0921.04
Expiration Date 05/06/2014
By Helena A. Nelson
Miami Dade Product Control Division

Date: 06/11/2010
Scale: NA
Design by: PPMF

Drawing Number
09-001.1

SHEET
3 of 13

PRODUCT COMPONENTS

1- ROLLING WALL SLATS
6063-T6 EXTRUDED ALUMINUM

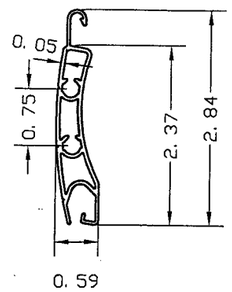

2- ROLLING WALL GUIDE RAIL
6063-T6 EXTRUDED ALUMINUM

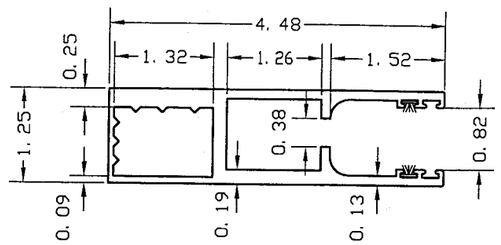

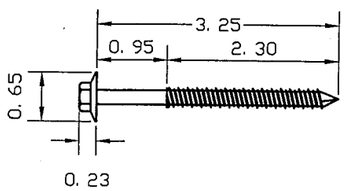

3- RETENTION SCREW
CARBON STEEL COATED W/ DACROMET 320 PLUS L COATING, AS MANUFACTURED AND CERTIFIED BY GEORGIA METAL COATING COMPANY AS PER ASTM B117 TEST REPORT 031604

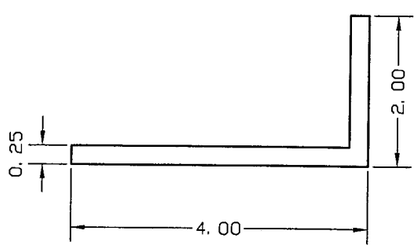

E- INSET SUPPORT ANGLE
EXTRUDED ALUMINUM
6061-T6 or 6005-T5

4- NYLON SLAT LOCK

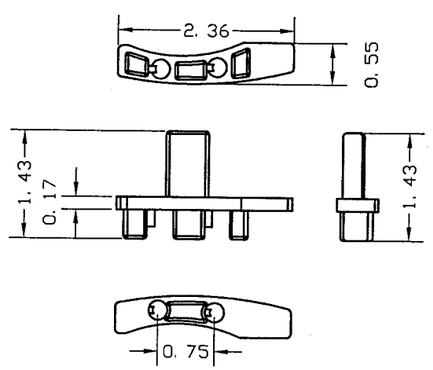

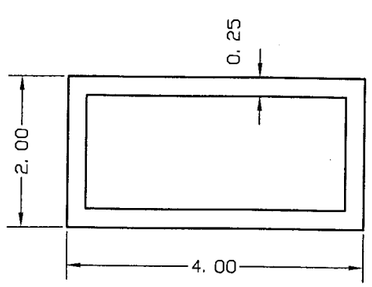

F- TUBE
EXTRUDED ALUMINUM
6061-T6 or 6005-T5

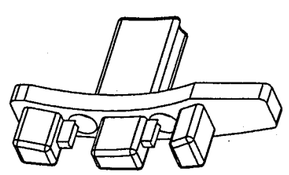

TABLE A1
SPACING ON CENTER FOR WALL MOUNT INSTALLATION

LOAD	TRACK TO TRACK																											
	72				84				96				108				144				216				285. 4			
Psf	A	B	C	D	A	B	C	D	A	B	C	D	A	B	C	D	A	B	C	D	A	B	C	D	A	B	C	D
30	6	6	5	6	6	6	5	6	6	6	5	6	6	6	5	6	6	6	5	6	5	5	4	3	4	4	4	–
40	6	6	5	6	6	6	5	6	6	6	5	6	6	6	5	6	6	6	5	5	4	4	4	3				
44	6	6	5	6	6	6	5	6	6	6	5	6	6	6	5	6	6	6	5	4	4	4	4	3				
50	6	6	5	6	6	6	5	6	6	6	5	6	6	6	5	6	6	6	5	4								
60	6	6	5	6	6	6	5	6	6	6	5	6	6	6	5	6	5	5	4	3								
70	6	6	5	6	6	6	5	6	6	6	5	6	6	6	5	6	4	4	4	3								
75	6	6	5	6	6	6	5	6	6	6	5	6	6	6	5	5	4	4	3	–								
80	6	6	5	6	6	6	5	6	6	6	5	6	6	6	5	5												
90	6	6	5	6	6	6	5	6	6	6	5	6	5	6	5	4												
100	6	6	5	6	6	6	5	6	6	6	5	5	5	5	4	4												
110	6	6	5	6	6	6	5	6	5	6	5	5	4	4	4	3												
113	6	6	5	6	6	6	5	6	5	5	5	4	4	4	4	3												
120	6	6	5	6	6	6	5	6	5	5	4	4																
130	6	6	5	6	6	6	5	6	4	5	4	4																
133	6	6	5	6	5	6	5	6	4	4	4	3																
140	6	6	5	6	5	6	5	5																				
150	6	6	5	6	5	5	4	5																				
160	6	6	5	6	4	5	4	4																				
170	5	6	5	6																								
180	5	6	4	5																								
190	5	5	4	5																								
200	4	5	4	4																								

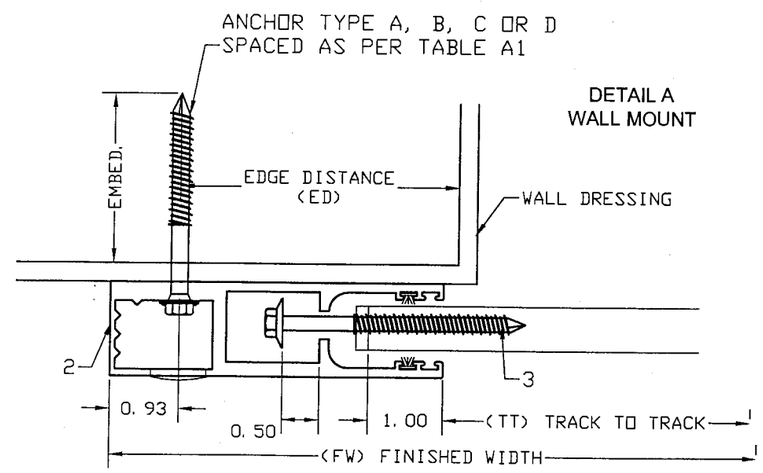

ANCHOR SCHEDULE:

ANCHOR	DESCRIPTION	MATERIAL	EMBEDMENT	EDGE DISTANCE
A	5/16" ITW TAPCONS	MIN. 2899 psi CONCRETE	2 1/4"	3 1/8"
B	5/16" ITW TAPCONS	GROUT FILLED C-90 BLOCK	2 1/4"	4"
C	1/4"-14X1" GRADE 5	MIN. 1/4" 6063-T6 ALUM.		1/2"
	SELF DRILLING SCREWS	OR A36 3/16" STEEL		3/8"
D	5/16"X3" TAPCONS	WOOD WITH G>=.55	2 1/4"	1-1/4"
E	3/8" POWERS WEDGE BOLT	MIN. 3000 psI CONCRET	3 1/2"	4-1/2"

ADVANCED HURRICANE TECHNOLOGIES
2409 J&C BLVD.
NAPLES, FLORIDA
34109
Phone: (239) 260-0020
Fax: (239) 260-0023

PRODUCT:
AHT SUPERSPAN
IMPACT ROLLING WALL
LARGE & SMALL MISSILE
IMPACT RATED

Engineering:
EngCo Inc.
CA 8116
6971 W. Sunrise Blvd. 104
Plantation, FL 33313
ENGCO@AOL.COM

PEDRO DE FIGUEIREDO LICENSE No. 52609 STATE OF FLORIDA PROFESSIONAL ENGINEER
JUN 2 1 2010
Engineer Seal
Pedro De Figueiredo
PE 52609

DRAFTING:
PK DRAFTING & MORE

MIAMI-DADE BCCO:

PRODUCT REVISED
as complying with the Florida Building Code
Acceptance No 10-0921.04
Expiration Date 05/06/2014
By Helena A. Melo
Miami Dade Product Control Division

Date: 06/11/2010
Scale: NA
Design by: PPMF

Drawing Number
09-001.1

TABLE A3
SPACING ON CENTER FOR ONE ANGLE INSET MOUNT INSTALLATION

LOAD	TRACK TO TRACK																											
	72				84				96				108				144				216				285.4			
Psf	A	B	C	D	A	B	C	D	A	B	C	D	A	B	C	D	A	B	C	D	A	B	C	D	A	B	C	D
30	6	6	5	6	6	6	5	6	6	6	5	6	6	6	5	6	4	5	4	5	-	-	-	-	-	-	-	-
40	6	6	5	6	6	6	5	6	6	6	5	6	6	6	5	6	-	4	3	3	-	-	-	-				
44	6	6	5	6	6	6	5	6	6	6	5	6	6	6	5	6	-	-	-	3	-	-	-	-				
50	6	6	5	6	6	6	5	6	6	6	5	6	6	6	5	6	-	-	-	3								
60	6	6	5	6	6	6	5	6	6	6	5	6	5	5	4	5	-	-	-	-								
70	6	6	5	6	6	6	5	6	6	6	5	6	4	4	3	4	-	-	-	-								
75	6	6	5	6	6	6	5	6	5	6	5	5	-	4	3	3	-	-	-	-								
80	6	6	5	6	6	6	5	6	5	5	4	5	-	4	3	3												
90	6	6	5	6	6	6	5	6	4	5	4	4	-	-	-	3												
100	6	6	5	6	6	6	5	5	-	4	3	3	-	-	-	-												
110	6	6	5	6	5	6	5	5	-	-	3	3	-	-	-	-												
113	6	6	5	6	5	5	4	4	-	-	-	3	-	-	-	-												
120	6	6	5	5	4	5	4	4	-	-	-	3																
130	6	6	5	5	4	4	3	3	-	-	-	-																
133	5	6	5	5	-	4	3	3	-	-	-	-																
140	5	6	5	5	-	4	3	3																				
150	5	5	4	4	-	-	3	3																				
160	4	5	4	4	-	-	-	-																				
170	4	4	3	3																								
180	-	4	3	3																								
190	-	-	3	3																								
200	-	-	-	3																								

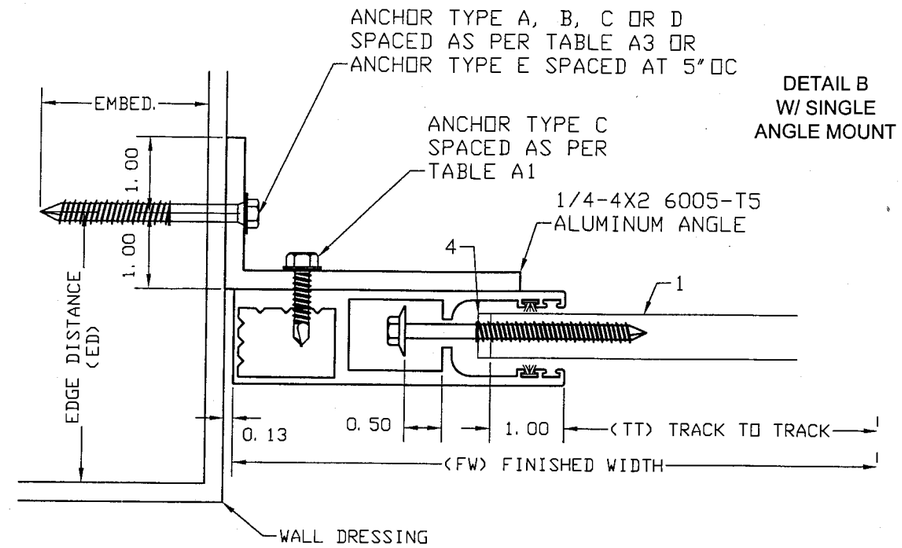

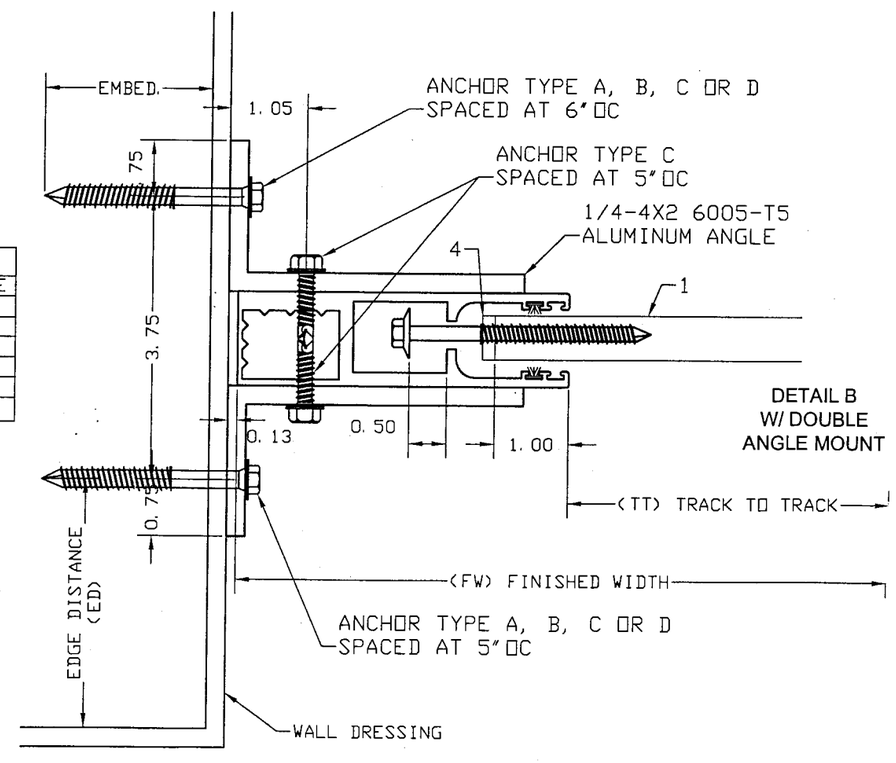

ANCHOR SCHEDULE:

ANCHOR	DESCRIPTION	MATERIAL	EMBEDMENT	EDGE DISTANCE
A	5/16" ITW TAPCONS	MIN. 2899 psi CONCRETE	2 1/4"	3 1/8"
B	5/16" ITW TAPCONS	GROUT FILLED C-90 BLOCK	2 1/4"	4"
C	1/4"-14X1" GRADE 5	MIN. 1/4" 6063-T6 ALUM.		1/2"
	SELF DRILLING SCREWS	OR A36 3/16" STEEL		3/8"
D	5/16"X3" TAPCONS	WOOD WITH G>=.55	2 1/4"	1-1/4"
E	3/8" POWERS WEDGE BOLT	MIN. 3000 psI CONCRETE	3 1/2"	4-1/2"

ADVANCED HURRICANE TECHNOLOGIES
2409 J&C BLVD.
NAPLES, FLORIDA
34109
Phone: (239) 260-0020
Fax: (239) 260-0023

PRODUCT:
AHT SUPERSPAN
IMPACT ROLLING WALL
LARGE & SMALL MISSILE
IMPACT RATED

Engineering:
EngCo Inc.
CA 8116
6971 W. Sunrise Blvd. 104
Plantation, FL 33313
ENGCO@AOL.COM

PEDRO DE FIGUEIREDO
LICENSE
No. 52609
STATE OF
FLORIDA
PROFESSIONAL ENGINEER
JUN 2010
Engineer Seal
Pedro De Figueiredo
PE 52609

DRAFTING:
PK DRAFTING & MORE

MIAMI-DADE BCCO:

PRODUCT REVISED
as complying with the Florida
Building Code
Acceptance No 10-0921.04
Expiration Date 05/06/2014
By
Miami Dade Product Control
Division

Date: 06/11/2010
Scale: NA
Design by: PPMF

Drawing Number
09-001.1

TABLE A2
SPACING ON CENTER FOR 2X4 BUILT-OUT MOUNT INSTALLATION

LOAD	TRACK TO TRACK																											
	72				84				96				108				144				216				285. 4			
Psf	A	B	C	D	A	B	C	D	A	B	C	D	A	B	C	D	A	B	C	D	A	B	C	D	A	B	C	D
30	6	6	5	6	6	6	5	6	6	6	5	6	6	6	5	6	6	6	5	6	-	-	-	-	-	-	-	-
40	6	6	5	6	6	6	5	6	6	6	5	6	6	6	5	6	5	6	5	4	-	-	-	-				
44	6	6	5	6	6	6	5	6	6	6	5	6	6	6	5	6	5	5	4	3	-	-	-	-				
50	6	6	5	6	6	6	5	6	6	6	5	6	6	6	5	6	4	4	4	3								
60	6	6	5	6	6	6	5	6	6	6	5	6	6	6	5	6	-	4	3	3								
70	6	6	5	6	6	6	5	6	6	6	5	6	6	6	5	6	-	-	3	-								
75	6	6	5	6	6	6	5	6	6	6	5	6	6	6	5	6	-	-	3	-								
80	6	6	5	6	6	6	5	6	6	6	5	6	6	6	5	5												
90	6	6	5	6	6	6	5	6	6	6	5	6	6	6	5	4												
100	6	6	5	6	6	6	5	6	6	6	5	6	5	5	4	4												
110	6	6	5	6	6	6	5	6	6	6	5	6	4	5	4	3												
113	6	6	5	6	6	6	5	6	6	6	5	5	4	4	4	3												
120	6	6	5	6	6	6	5	6	6	6	5	5																
130	6	6	5	6	6	6	5	6	5	6	5	4																
133	6	6	5	6	6	6	5	6	5	5	5	4																
140	6	6	5	6	6	6	5	6																				
150	6	6	5	6	6	6	5	6																				
160	6	6	5	6	6	6	5	6																				
170	6	6	5	6																								
180	6	6	5	6																								
190	6	6	5	6																								
200	6	6	5	6																								

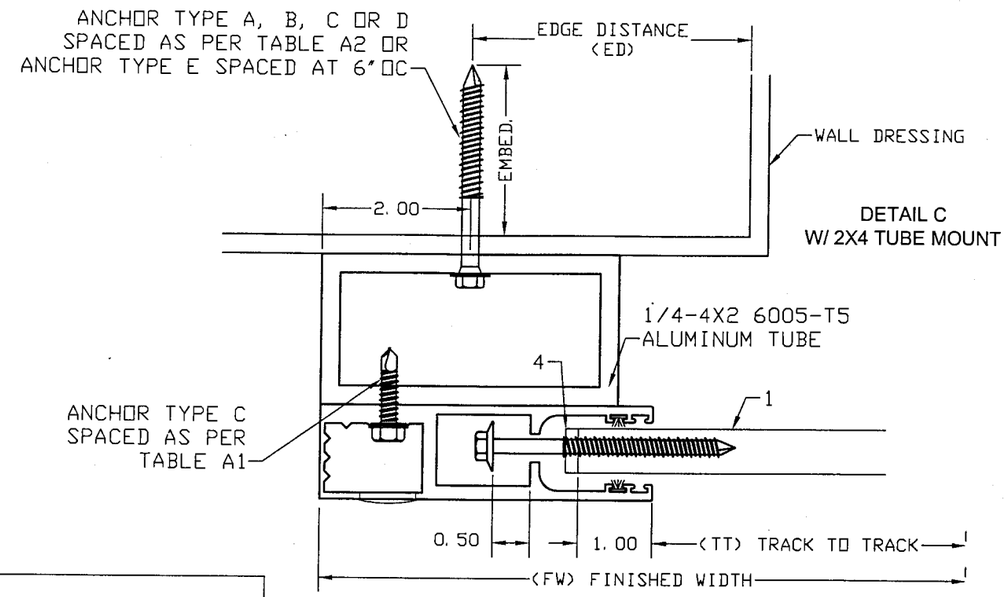

ANCHOR SCHEDULE:

ANCHOR	DESCRIPTION	MATERIAL	EMBEDMENT	EDGE DISTANCE
A	5/16" ITW TAPCONS	MIN. 2899 psi CONCRETE	2 1/4"	3 1/8"
B	5/16" ITW TAPCONS	GROUT FILLED C-90 BLOCK	2 1/4"	4"
C	1/4"-14X1" GRADE 5	MIN. 1/4" 6063-T6 ALUM.		1/2"
	SELF DRILLING SCREWS	OR A36 3/16" STEEL		3/8"
D	5/16"X3" TAPCONS	WOOD WITH G>=. 55	2 1/4"	1-1/4"
E	3/8" POWERS WEDGE BOLT	MIN. 3000 psi CONCRETE	3 1/2"	4-1/2"

TABLE A2.1
SPACING ON CENTER FOR 4X4 BUILT-OUT MOUNT INSTALLATION

LOAD	TRACK TO TRACK																											
	72				84				96				108				144				216				285. 4			
Psf	A	B	C	D	A	B	C	D	A	B	C	D	A	B	C	D	A	B	C	D	A	B	C	D	A	B	C	D
30	6	6	5	6	6	6	5	6	6	6	5	6	6	6	5	6	5	6	5	5	-	-	-	-	-	-	-	-
40	6	6	5	6	6	6	5	6	6	6	5	6	6	6	5	6	-	4	3	3	-	-	-	-				
44	6	6	5	6	6	6	5	6	6	6	5	6	6	6	5	6	-	-	3	3	-	-	-	-				
50	6	6	5	6	6	6	5	6	6	6	5	6	6	6	5	6	-	-	-	-								
60	6	6	5	6	6	6	5	6	6	6	5	6	6	6	5	6	-	-	-	-								
70	6	6	5	6	6	6	5	6	6	6	5	6	6	6	5	5	-	-	-	-								
75	6	6	5	6	6	6	5	6	6	6	5	6	5	6	5	4	-	-	-	-								
80	6	6	5	6	6	6	5	6	6	6	5	6	5	5	4	4												
90	6	6	5	6	6	6	5	6	6	6	5	6	4	4	4	3												
100	6	6	5	6	6	6	5	6	6	6	5	5	-	4	3	3												
110	6	6	5	6	6	6	5	6	5	6	5	4	-	-	3	3												
113	6	6	5	6	6	6	5	6	5	5	4	4	-	-	3	-												
120	6	6	5	6	6	6	5	6	4	5	4	4																
130	6	6	5	6	6	6	5	6	4	4	3	3																
133	6	6	5	6	6	6	5	6	4	4	3	3																
140	6	6	5	6	6	6	5	6																				
150	6	6	5	6	6	6	5	6																				
160	6	6	5	6	5	6	5	5																				
170	6	6	5	6																								
180	6	6	5	6																								
190	6	6	5	6																								
200	6	6	5	6																								

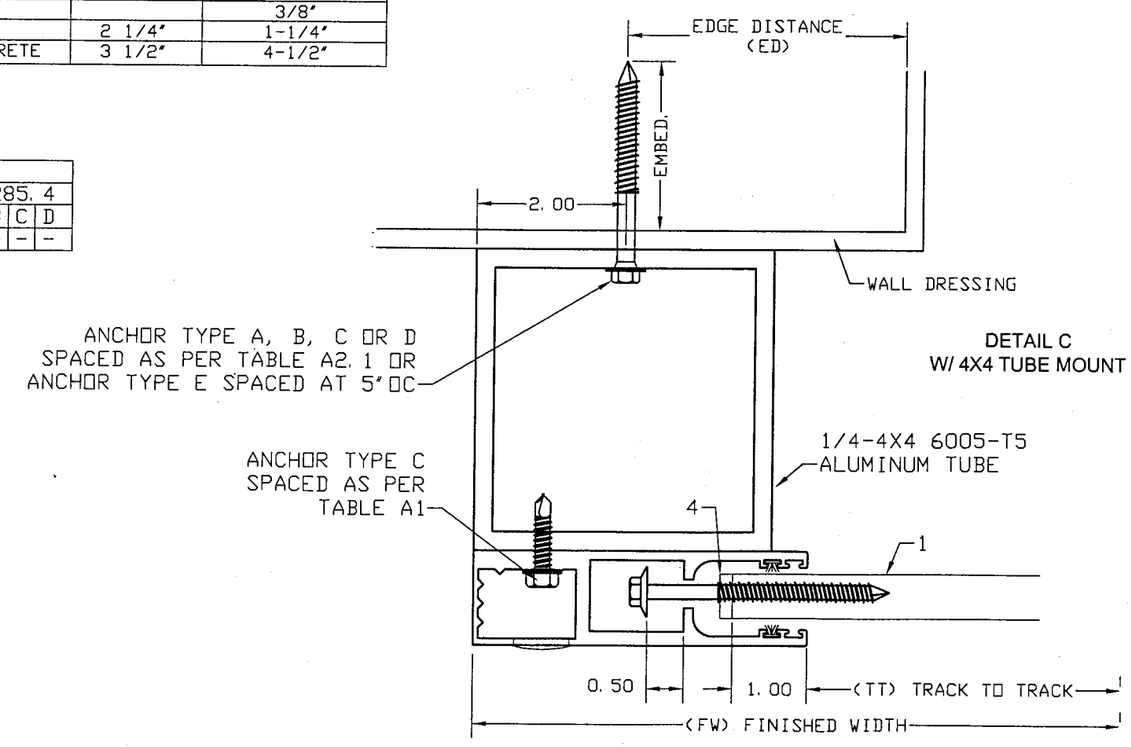

ADVANCED
HURRICANE
TECHNOLOGIES

2409 J&C BLVD.
NAPLES, FLORIDA
34109
Phone: (239) 260-0020
Fax: (239) 260-0023

PRODUCT:
AHT SUPERSPAN
IMPACT ROLLING WALL
LARGE & SMALL MISSILE
IMPACT RATED

Engineering:
EngCo Inc.
CA 8116
6971 W. Sunrise Blvd. 104
Plantation, FL 33313
ENGCO@AOL.COM

PEDRO DE FIGUEIREDO
LICENSE
No. 52609
JUN 22 2010
STATE OF
PROFESSIONAL ENGINEER

Engineer Seal
Pedro De Figueiredo
PE 52609

DRAFTING:
PK DRAFTING & MORE

MIAMI-DADE BCCO:

PRODUCT REVISED
as complying with the Florida Building Code
Acceptance No 10-0921.04
Expiration Date 05/06/2014
By
Miami Dade Product Control Division

Date: 06/11/2010
Scale: NA
Design by: PPMF

Drawing Number
09-001.1

SHEET
6 of 13

STORM BARS SELECTION TABLES

POSITIVE DESIGN RATING - Pd (Psf)

1/4-2x2 STORM BAR - 2 SPANS

SLAT	STORM BAR HEIGHT				
Span	40	46	52	58	70
36	196	129	89	64	36
42	160	110	76	55	--
48	133	97	67	48	--
54	113	86	59	43	--
60	98	77	53	38	--
72	75	64	44	32	--

1/4-2x2 STORM BAR - 3+ SPANS

SLAT	STORM BAR HEIGHT				
Span	40	46	52	58	70
36	113	113	101	73	41
42	92	92	86	62	35
48	75	75	75	55	--
54	65	65	65	48	--
60	56	56	56	44	--
72	44	44	44	36	--

1/8-2x3 STORM BAR - 2 SPANS

SLAT	STORM BAR HEIGHT				
Span	40	46	52	60	72
36	200	177	138	94	54
42	160	151	118	80	46
48	133	132	103	70	40
54	113	113	92	62	35
60	98	98	82	56	32
72	75	75	69	46	26

1/8-2x3 STORM BAR - 3+ SPANS

SLAT	STORM BAR HEIGHT				
Span	40	46	52	60	72
36	113	113	113	106	61
42	92	92	92	91	52
48	75	75	75	75	45
54	65	65	65	65	40
60	56	56	56	56	36
72	44	44	44	44	30

1/4-2x4 STORM BAR - 2 SPANS
OR 1/8-2X5 STORM BAR

SLAT	STORM BAR HEIGHT				
Span	60	72	84	96	108
42	160	131	95	69	49
48	133	114	83	60	42
54	113	102	74	53	38
60	98	91	66	48	34
66	86	83	60	43	30
72	75	75	55	40	--

1/4-2x4 STORM BAR - 3+ SPANS
OR 1/8-2X5 STORM BAR

SLAT	STORM BAR HEIGHT				
Span	60	72	84	96	108
42	92	92	92	78	55
48	75	75	75	68	48
54	65	65	65	60	43
60	56	56	56	55	38
66	49	49	49	49	35
72	44	44	44	44	32

1/8-2x6 STORM BAR - 2 SPANS

SLAT	STORM BAR HEIGHT				
Span	72	84	96	108	120
42	160	126	95	74	56
48	133	110	83	65	49
54	113	98	74	58	43
60	98	87	66	52	39
66	86	79	60	47	35
72	75	73	55	43	32

1/8-2x6 STORM BAR - 3+ SPANS

SLAT	STORM BAR HEIGHT				
Span	72	84	96	108	120
42	92	92	92	85	64
48	75	75	75	74	55
54	65	65	65	65	49
60	56	56	56	56	45
66	49	49	49	49	40
72	44	44	44	44	36

STORM BARS MOUNTING OPTIONS

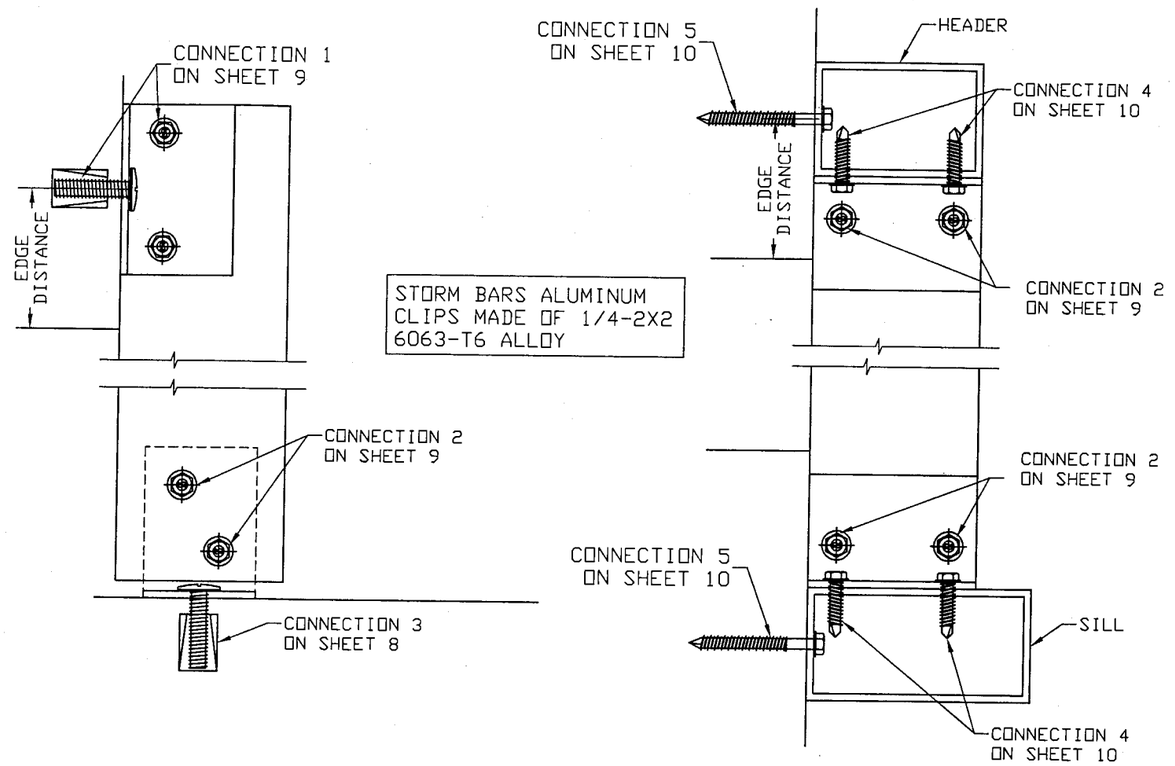

STORM BAR NOTES:

1- ALL STORM BAR SHAPES TO BE 6063-T6 ALUMINUM.
2- TABLES MUST WORK IN CONJUNCTION WITH MAXIMUM ALLOWABLE TT TABLES ON SHEET 1.
3- SPAN = TT / NUMBER OF SPANS
4- THESE TABLES ARE LIMITED BY THE SHAPES AND ANCHORAGE USED. SPECIFIC CONDITIONS OUT OF THE SCOPE OF THESE TABLES CAN BE ADDRESSED WITH A SITE SPECIFIC DESIGN BY A PROFESSIONAL ENGINEER.

SPAN - SLAT SPAN
DH - DOOR HEIGHT
SBH - STORM BAR HEIGHT
TA - STORM BAR TRIBUTARY AREA

TABLE 1.1
ALLOWABLE POSITIVE DESIGNED PRESSURE

SLAT SPAN (IN)	DESIGN RATING (PSF)
72	+200
66	+200
60	+200
54	+200
48	+200
42	+200
36	+200

STORM BAR USER GUIDE:

1- OBTAIN DESIGNED PRESSURE AS PER GENERAL NOTES 4
2- FIND THE MAXIMUM NEGATIVE PRESSURE RATING ON TABLE 1 BASED ON TRACK TO TRACK DIMENSION (TT)
3- FIND THE MAXIMUM POSITIVE RATING PRESSURE ON TABLE 1. 1 BASED ON SLAT SPAN DIMENSION (SPAN)
4- SELECT THE PRESSURE RATING FOR THE INTERIOR STORM BAR BASED ON STORM BAR TYPE, HEIGHT AND SLAT SPAN.
5- THE PROJECT POSITIVE AND NEGATIVE DESIGN PRESSURES PROVIDED BASED ON GENERAL NOTE 4 MUST BE LOWER OR EQUAL THAN THE PRESSURE RATINGS.

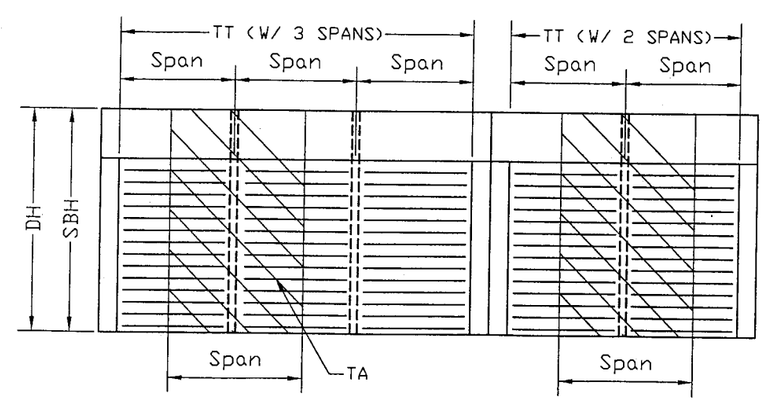

ADVANCED HURRICANE TECHNOLOGIES
2409 J&C BLVD.
NAPLES, FLORIDA
34109
Phone: (239) 260-0020
Fax: (239) 260-0023

PRODUCT:
AHT SUPERSPAN
IMPACT ROLLING WALL
LARGE & SMALL MISSILE
IMPACT RATED

Engineering:
EngCo Inc.
CA 8116
6971 W. Sunrise Blvd. 104
Plantation, Fl. 33313
ENGCO@AOL.COM

PEDRO J. DE FIGUEIREDO
LICENSE
No. 52609
JUN 22 2010
STATE OF FLORIDA
PROFESSIONAL ENGINEER
Engineer Seal
Pedro De Figueiredo
PE 52609

DRAFTING:
PK DRAFTING & MORE

MIAMI-DADE BCCO:

PRODUCT REVISED
as complying with the Florida Building Code
Acceptance No 10-0921.04
Expiration Date 05/06/2014
By Helena A. Molina
Miami Dade Product Control Division

Date: 06/11/2010
Scale: NA
Design by: PPMF

Drawing Number
09-001.1

SHEET
7 of 13

CONNECTION 3 - STORM BARS ANCHORAGE
FLOOR/CEILING MOUNTED TO CONCRETE

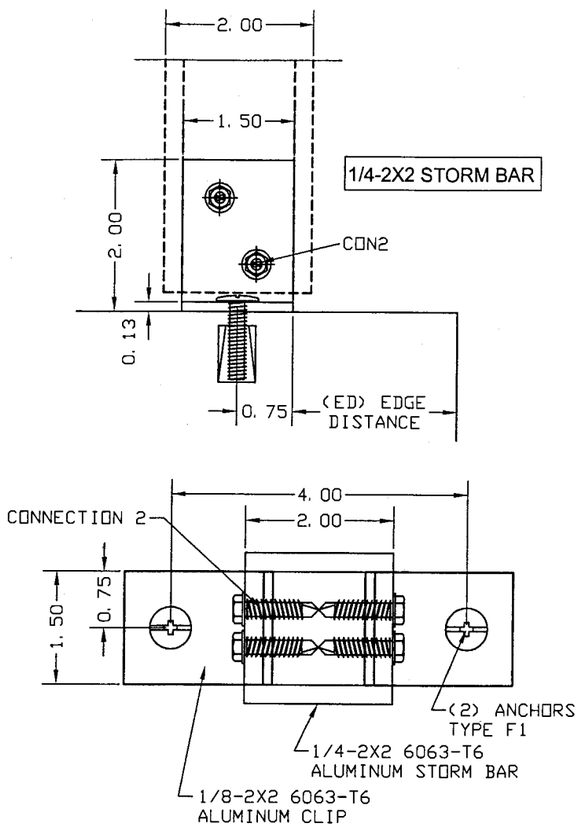

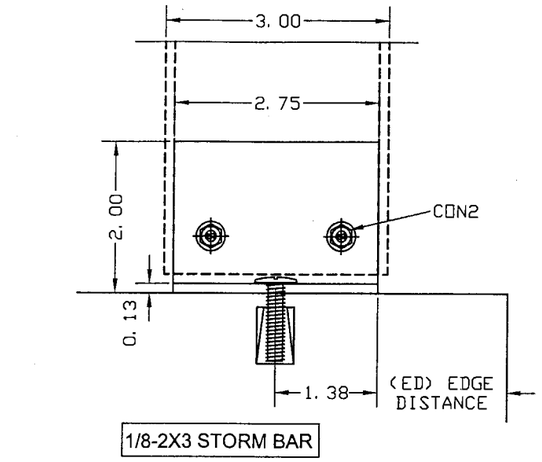

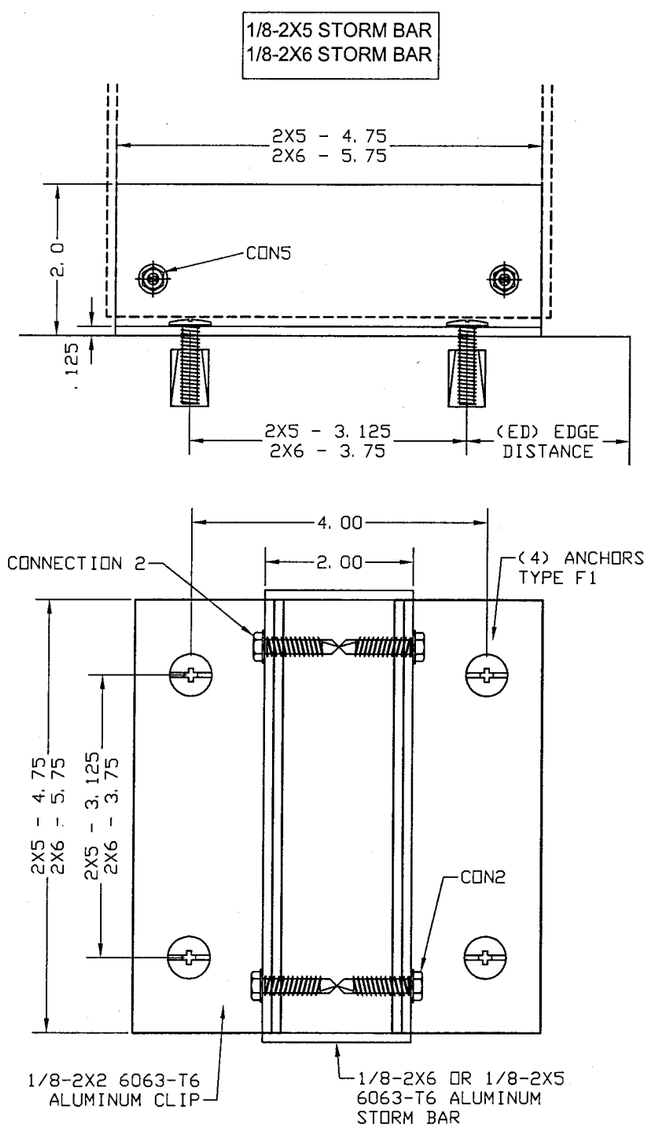

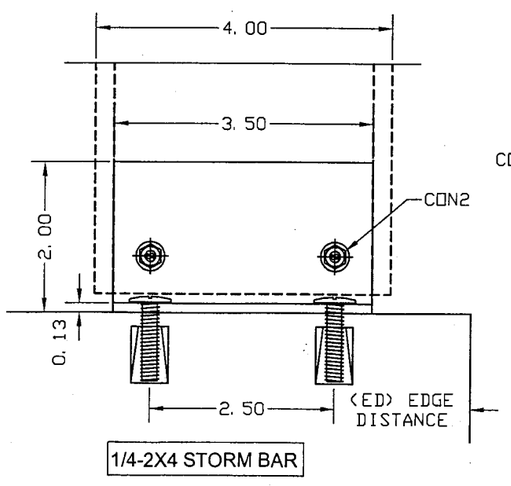

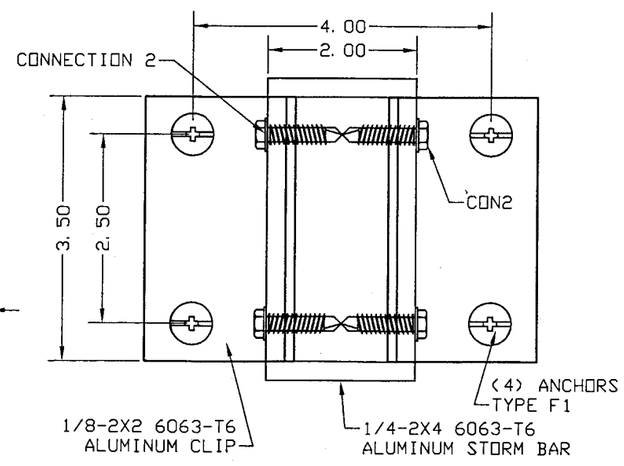

CONNECTION 3 - ANCHOR SCHEDULE

TYPE	DESCRIPTION	MANUFACTURER	EMBEDMENT	ED	BASE MATERIAL
F1	5/16-18 CALKIN	POWERS	1'	4'	3000 psi CONCRETE

ED - EDGE DISTANCE

ADVANCED HURRICANE TECHNOLOGIES
2409 J&C BLVD.
NAPLES, FLORIDA
34109
Phone: (239) 260-0020
Fax: (239) 260-0023

PRODUCT:
AHT SUPERSPAN
IMPACT ROLLING WALL
LARGE & SMALL MISSILE
IMPACT RATED

Engineering:
EngCo Inc.
CA 8116
6971 W. Sunrise Blvd. 104
Plantation, Fl. 33313
ENGCO@AOL.COM

PEDRO DE FIGUEIREDO LICENSE No. 52609 STATE OF FLORIDA PROFESSIONAL ENGINEER
JUN 22 2010
Engineer Seal
Pedro De Figueiredo
PE 52609

DRAFTING:
PK DRAFTING & MORE

MIAMI-DADE BCCO:

PRODUCT REVISED
as complying with the Florida Building Code
Acceptance No 10-0921.04
Expiration Date 05/06/2014
By Helena A. Melo
Miami Dade Product Control Division

Date: 06/11/2010
Scale: NA
Design by: PPMF

Drawing Number
09-001.1

CONNECTION 2 - STORM BAR CONNECTION TO ALUMINUM CLIP

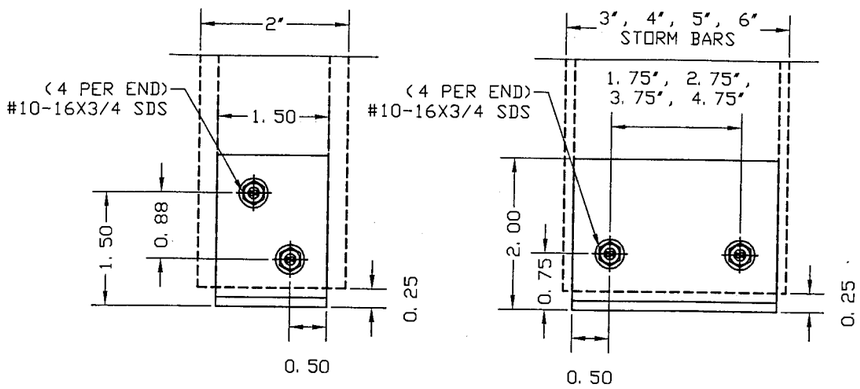

NOTE: COONECTION 2 WITH SELF DRILLING SCREWS OR BOLTS W/ NUTS CAN BE USED AT HEADER OR SILL CONDITIONS

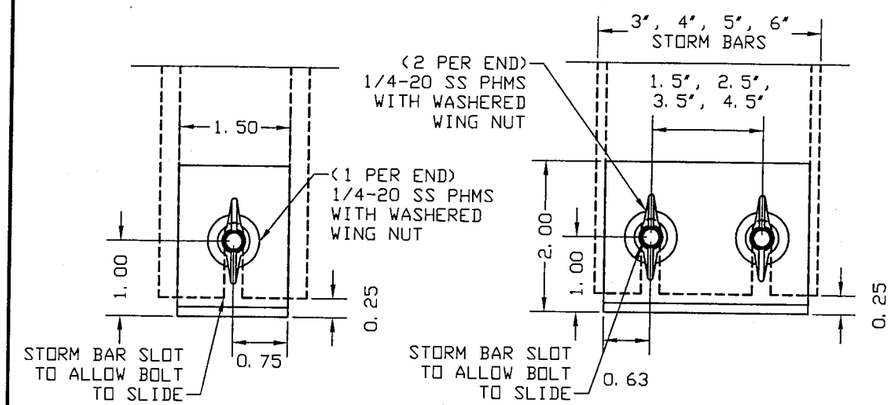

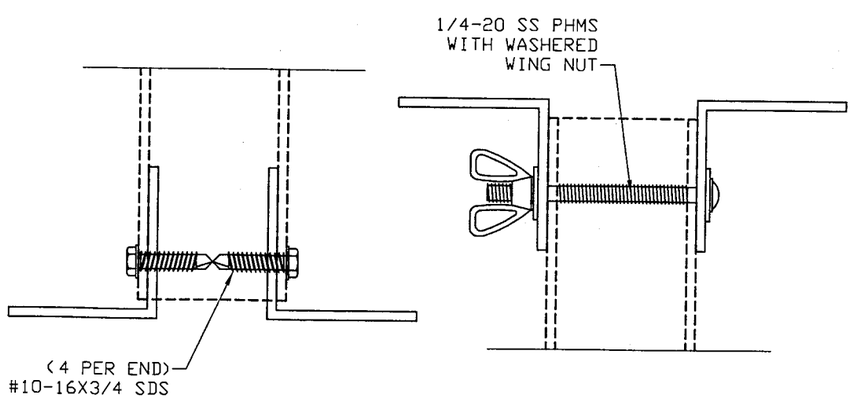

CONNECTION 1 - STORM BAR CONNECTION TO WALL

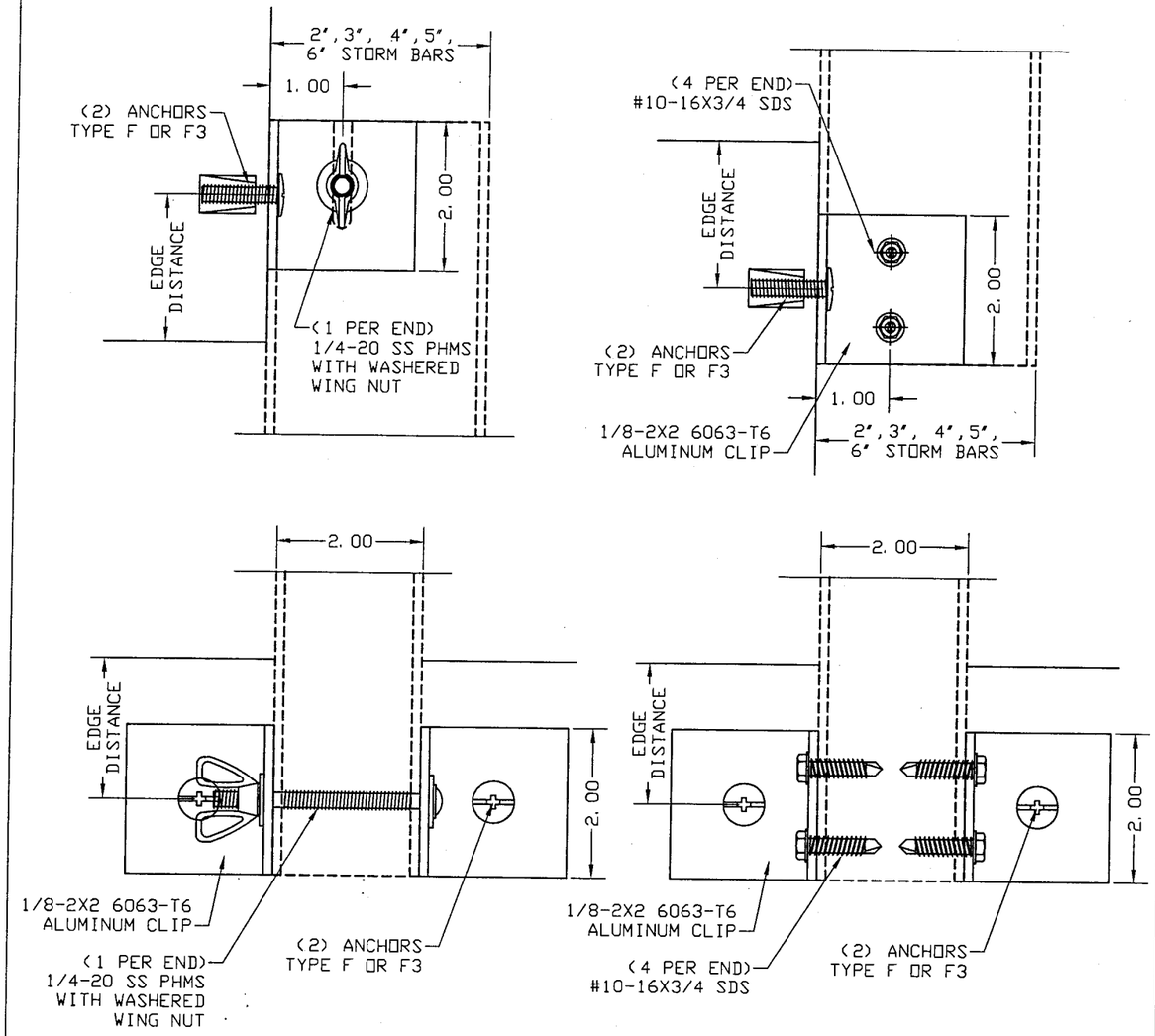

NOTES:
1- STOM BAR SUPPORTED BY BEARING AGAINST THE WALL
2- CONNECTION WITH SELF DRILLING SCREWS OR BOLTS W/ NUTS CAN BE USED AT HEADER OR SILL CONDITIONS

CONNECTION 1 - ANCHOR SCHEDULE

TYPE	DESCRIPTION	MANUFACTURER	EMBEDMENT	ED	BASE MATERIAL
F	1/4-20 CALKIN	POWERS	7/8"	3"	3000 psi CONCRETE
F3	1/4-20 CALKIN	POWERS	7/8"	3"	HOLLOW CONCRETE MASONRY

ED - EDGE DISTANCE

ADVANCED HURRICANE TECHNOLOGIES
2409 J&C BLVD.
NAPLES, FLORIDA
34109
Phone: (239) 260-0020
Fax: (239) 260-0023

PRODUCT:
AHT SUPERSPAN
IMPACT ROLLING WALL
LARGE & SMALL MISSILE
IMPACT RATED

Engineering:
EngCo Inc.
CA 8116
6971 W. Sunrise Blvd. 104
Plantation, Fl. 33313
ENGCO@AOL.COM

PEDRO DE FIGUEIREDO
LICENSE
No. 52609
STATE OF FLORIDA
PROFESSIONAL ENGINEER
JUN 22 2010
Engineer Seal
Pedro De Figueiredo
PE52609

DRAFTING:
PK DRAFTING & MORE

MIAMI-DADE BCCO:

PRODUCT REVISED
as complying with the Florida Building Code
Acceptance No 10-0921.04
Expiration Date 05/06/2014
By
Miami Dade Product Control Division

Date: 06/11/2010
Scale: NA
Design by: PPMF

Drawing Number
09-001.1

CONNECTION 4
STORM BARS ANCHORAGE FLOOR/CEILING TO BUILT-OUT TUBE OR HEADER

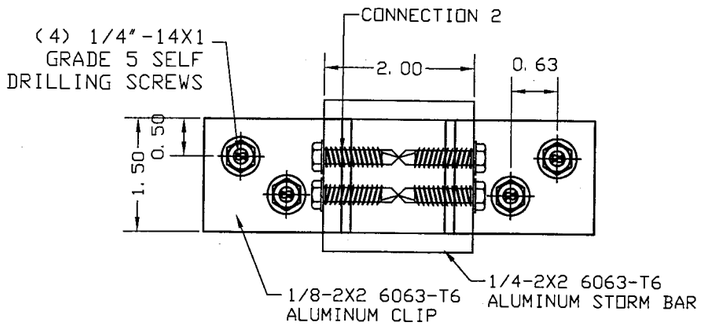

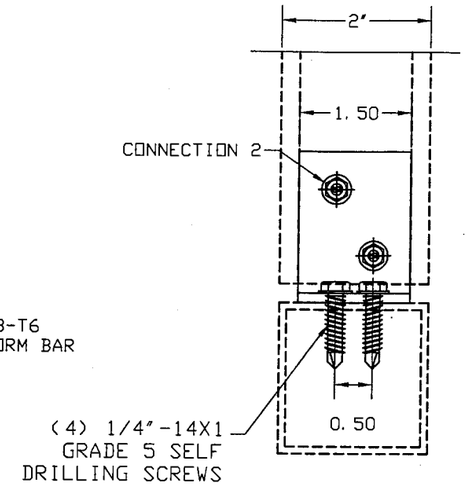

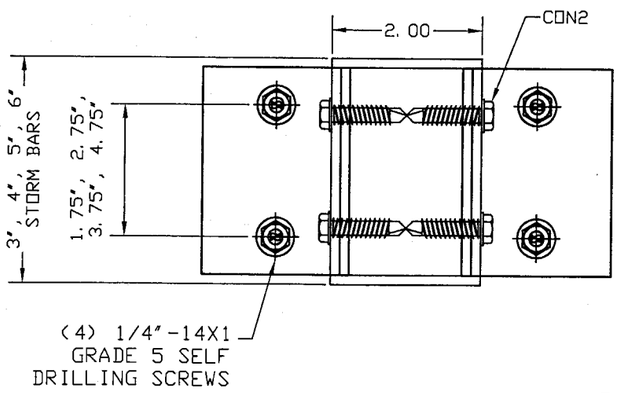

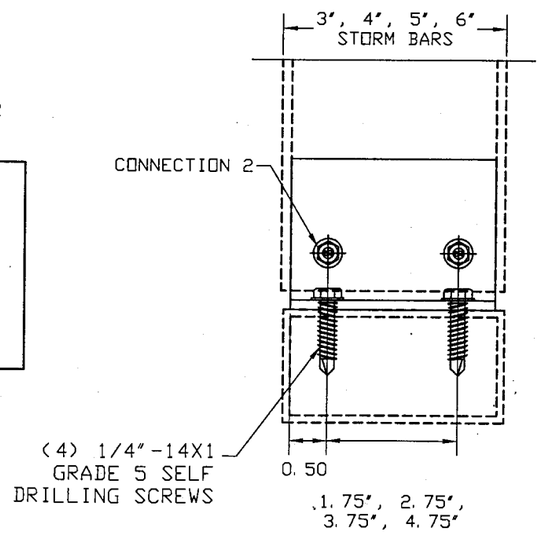

CONNECTION 5
HEADER / SILL ALUMINUM TUBE ANCHORED TO WALL

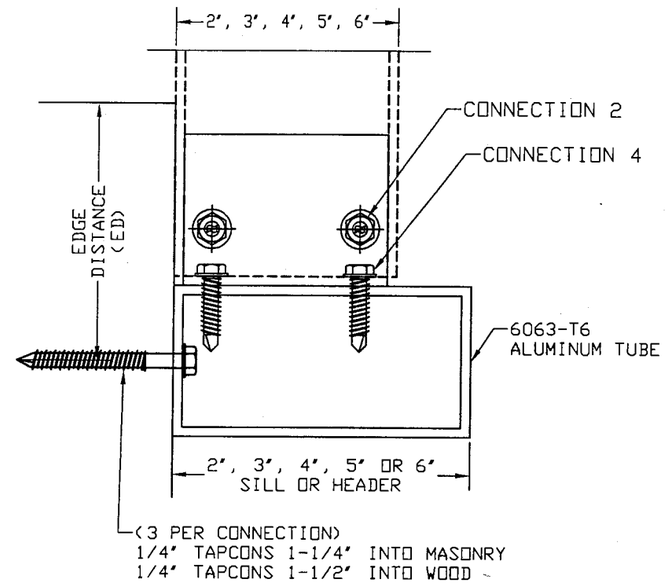

NOTE: HEADER AND SILL TUBE CONNECTED TO WALL BY BEARING.

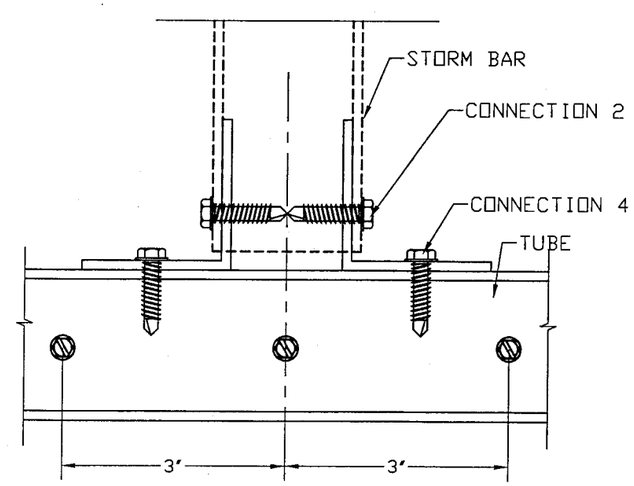

ADVANCED HURRICANE TECHNOLOGIES
2409 J&C BLVD.
NAPLES, FLORIDA
34109
Phone: (239) 260-0020
Fax: (239) 260-0023

PRODUCT:
AHT SUPERSPAN
IMPACT ROLLING WALL
LARGE & SMALL MISSILE
IMPACT RATED

Engineering:
EngCo Inc.
CA 8116
6971 W. Sunrise Blvd. 104
Plantation, Fl. 33313
ENGCO@AOL.COM

PEDRO DE FIGUEIREDO
LICENSE
No. 52609
STATE OF FLORIDA
PROFESSIONAL ENGINEER
JUN 22 2010
Engineer Seal
Pedro De Figueiredo
PE 52609

DRAFTING:
PK DRAFTING & MORE

MIAMI-DADE BCCO:

PRODUCT REVISED
as complying with the Florida
Building Code
Acceptance No 10-0921.04
Expiration Date 05/06/2014
By Helen A. Molina
Miami Dade Product Control
Division

Date: 06/11/2010
Scale: NA
Design by: PPMF

Drawing Number
09-001.1

SHEET
10 of 13

EQUALLY SPACED MULLIONS SELECTION

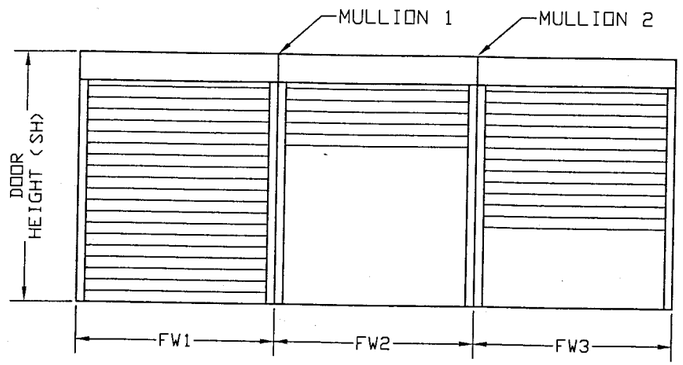

MULLION 1: TM1= (FW1+FW2) / 2
MULLION 2: TM2= (FW2+FW3) / 2
TM: TRIBUTARY MODULE

MULLIONS SECTIONS

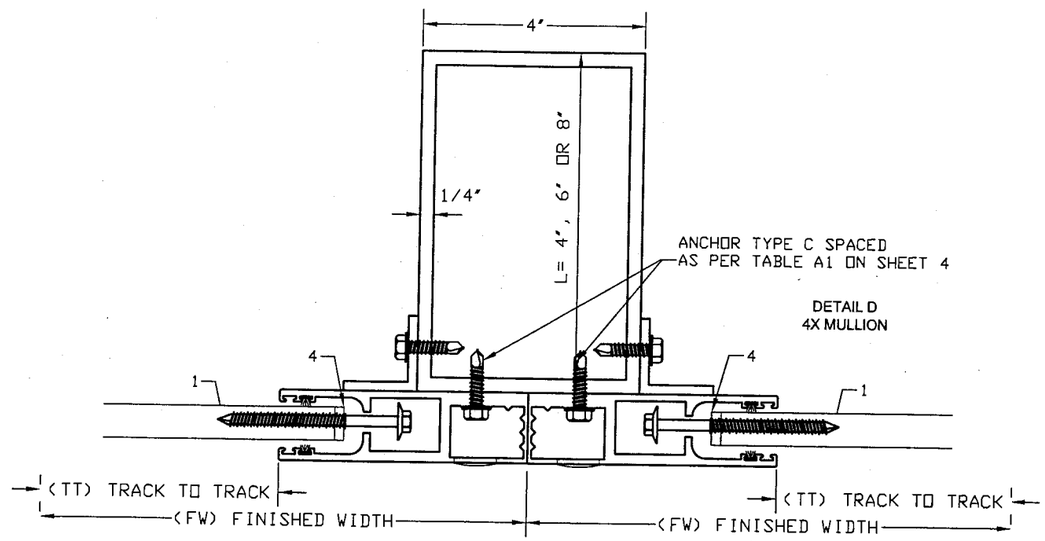

MULLION BARS SELECTION TABLES (PSF)

DOOR MODULE	MULLION TYPE & MAX. HEIGHT								
	1/4-4x8			1/4-4x6			1/4-4x4		
	144	132	120	120	108	96	96	84	72
294	30	30	30	28	30	30	21	30	30
249	38	38	38	33	38	38	24	37	38
201	49	51	51	41	51	51	30	45	51
177	55	62	62	47	62	62	34	52	62
129	76	91	98	65	89	98	47	71	98
105	94	112	133	80	110	133	58	88	133
81	122	145	176	104	142	181	76	114	181

NOTES:
1- MULLIONS WERE DESIGNED BY RATIONAL ANALYSIS BASED ON THE ALUMINUM DESIGN MANUAL 2005 ED. AND THE FLORIDA BUILDING CODE.
2- DEFLECTION CRITERIA: MAXIMUM SPAN /180
3- VALUES ABOVE IS APPLICABLE ONLY FOR EQUAL MODULES FW1=FW2=FW3.
4- UNEQUAL MODULES ARE TO BE DESIGNED BY RATIONAL ANALYSIS IN A CASE BY CASE BASIS.

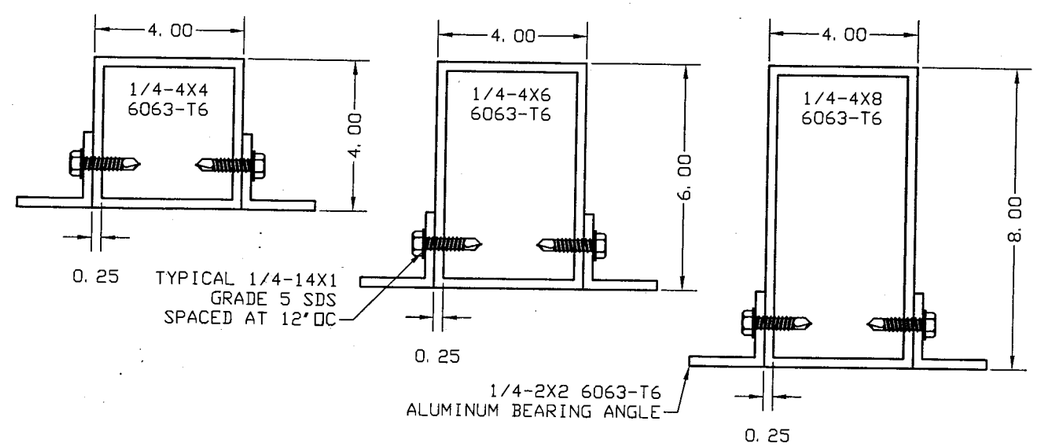

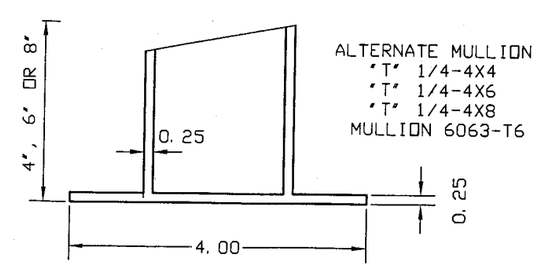

ADVANCED HURRICANE TECHNOLOGIES
2409 J&C BLVD.
NAPLES, FLORIDA
34109
Phone: (239) 260-0020
Fax: (239) 260-0023

PRODUCT:
AHT SUPERSPAN
IMPACT ROLLING WALL
LARGE & SMALL MISSILE
IMPACT RATED

Engineering:
EngCo Inc.
CA 8116
6971 W. Sunrise Blvd. 104
Plantation, Fl. 33313
ENGCO@AOL.COM

PEDRO J. DE FIGUEIREDO
LICENSE
No. 52609
STATE OF FLORIDA
PROFESSIONAL ENGINEER
JUN 22 2010
Engineer Seal
Pedro De Figueiredo
PE 52609

DRAFTING:
PK DRAFTING & MORE

MIAMI-DADE BCCO:

PRODUCT REVISED
as complying with the Florida Building Code
Acceptance No 10-0921.04
Expiration Date 05/06/2014
By
Miami Dade Product Control Division

Date: 06/11/2010
Scale: NA
Design by: PPMF

Drawing Number
09-001.1

EQUALLY SPACED MULLIONS WALL AND INSET CONNECTIONS

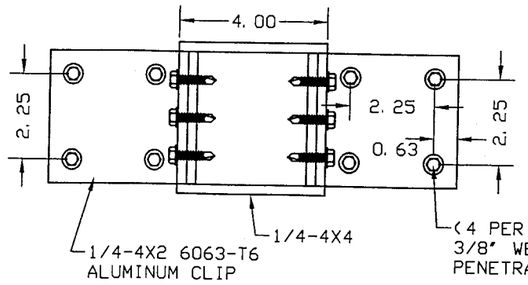

FC1
FLOOR/CEILING
MOUNT

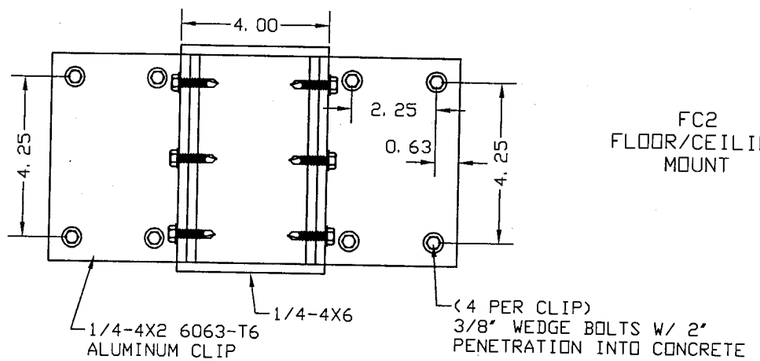

FC2
FLOOR/CEILING
MOUNT

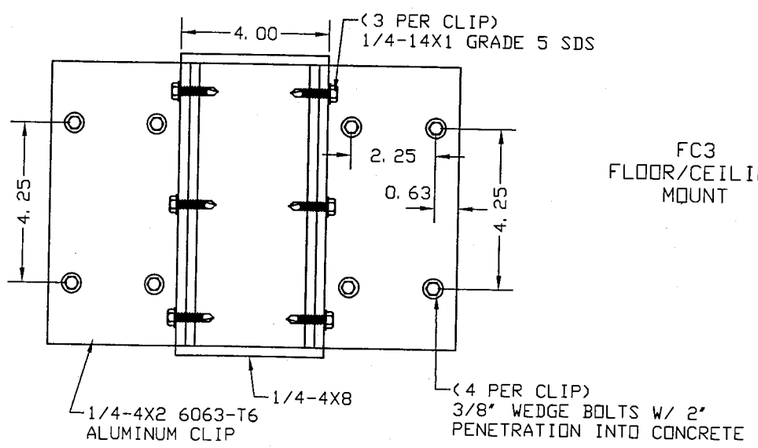

FC3
FLOOR/CEILING
MOUNT

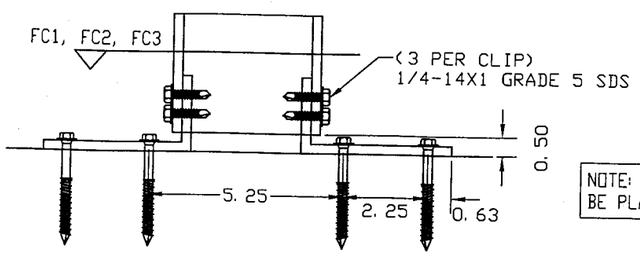

NOTE: ANGLE CLIP TO BE PLACED INSIDE TUBE

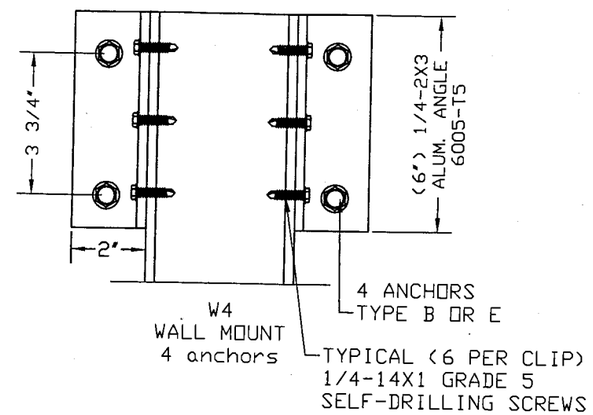

W4
WALL MOUNT
4 anchors

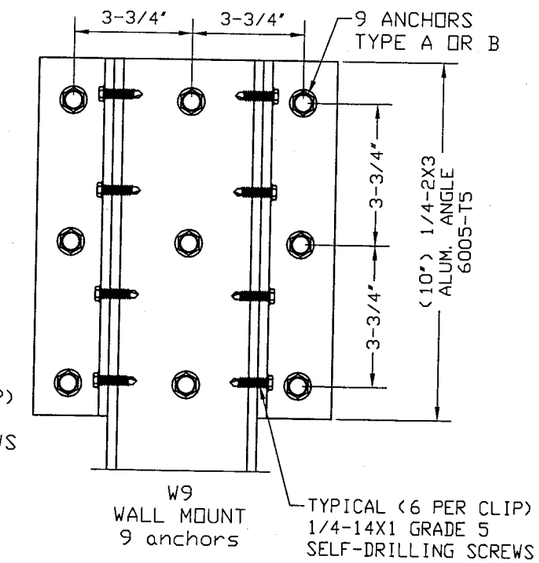

W9
WALL MOUNT
9 anchors

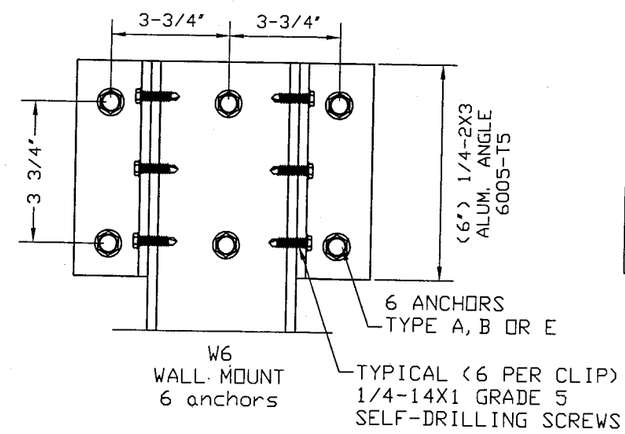

W6
WALL MOUNT
6 anchors

WALL MOUNT ANCHOR SELECTION

ANCHOR TYPE	MULLION TYPE	4X4	4X6	4X8
	A	W6	W9	W9
	B	W4	W6	W9
	E	W4	W6	W6

ANCHOR SCHEDULE:

ANCHOR	DESCRIPTION	MATERIAL	EMBEDMENT	EDGE DISTANCE
A	5/16"X3" TAPCONS	MIN. 2899 psi CONCRETE	2 1/4"	3 1/8"
B	5/16"X3" TAPCONS	GROUT FILLED C-90 BLOCK	2 1/4"	4"
E	3/8"X4" WEDGE BOLTS	MIN. 3000 psi CONCRETE	2 1/2"	4 1/2"

ADVANCED HURRICANE TECHNOLOGIES
2409 J&C BLVD.
NAPLES, FLORIDA
34109
Phone: (239) 260-0020
Fax: (239) 260-0023

PRODUCT:
AHT SUPERSPAN
IMPACT ROLLING WALL
LARGE & SMALL MISSILE
IMPACT RATED

Engineering:
EngCo Inc.
CA 8116
6971 W. Sunrise Blvd. 104
Plantation, Fl. 33313
ENGCO@AOL.COM

PEDRO J. DE FIGUEIREDO
LICENSE
No. 52609
JUN 2 8 2010
STATE OF FLORIDA
PROFESSIONAL ENGINEER
Engineer Seal
Pedro De Figueiredo
PE 52609

DRAFTING:
PK DRAFTING & MORE

MIAMI-DADE BCCO:

PRODUCT REVISED
as complying with the Florida Building Code
Acceptance No 10-0921.04
Expiration Date 05/06/2014
By
Miami Dade Product Control Division

Date: 06/11/2010
Scale: NA
Design by: PPMF

Drawing Number
09-001.1

HOOD ASSEMBLY

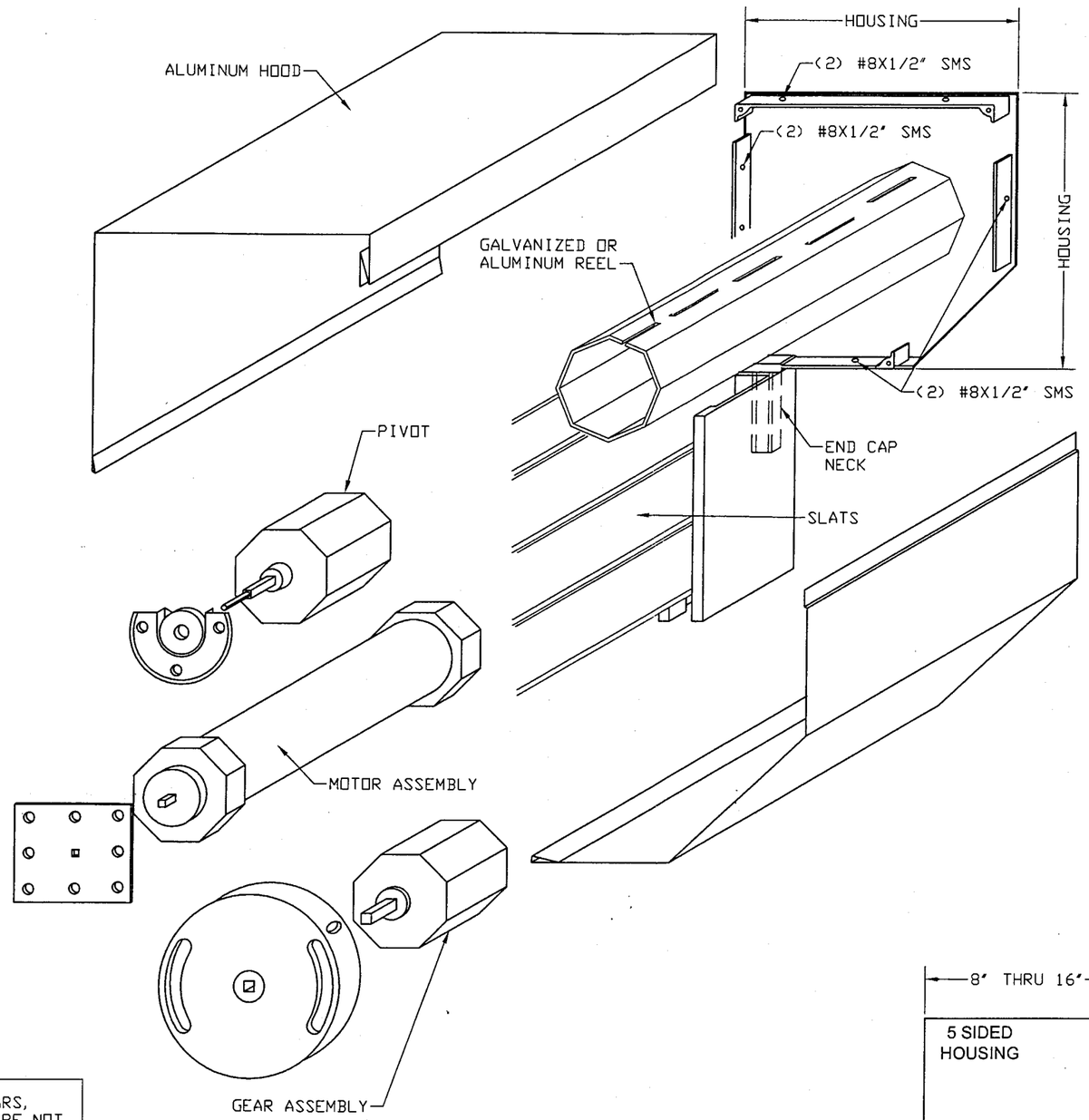

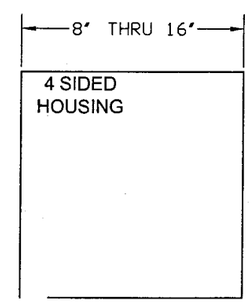

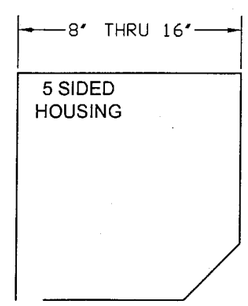

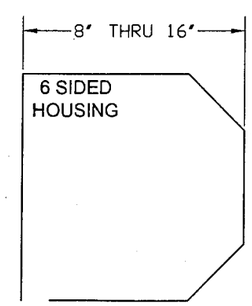

NOTE: THE ROLL-UP MECHANISM (GEARS, MOTORS, SUPPORTING END PLATES) ARE NOT PART OF THIS APPROVAL. MANUFACTURER IS RESPONSIBLE TO SPECIFY THESE COMPONENTS FOR PROPER SHUTTER OPERATION.

ADVANCED HURRICANE TECHNOLOGIES

2409 J&C BLVD.
NAPLES, FLORIDA
34109
Phone: (239) 260-0020
Fax: (239) 260-0023

PRODUCT:
AHT SUPERSPAN
IMPACT ROLLING WALL
LARGE & SMALL MISSILE
IMPACT RATED

Engineering:
EngCo Inc.
CA 8116
6971 W. Sunrise Blvd. 104
Plantation, Fl. 33313
ENGCO@AOL.COM

PEDRO A. DE FIGUEIREDO
LICENSE
No. 62609
JUN 12 2010
STATE OF FLORIDA
PROFESSIONAL ENGINEER

Engineer Seal
Pedro De Figueiredo
PE 52409

DRAFTING:
PK DRAFTING & MORE

MIAMI-DADE BCCO:

PRODUCT REVISED
as complying with the Florida
Building Code
Acceptance No 10-0921.04
Expiration Date 05/06/2014
By
Miami Dade Product Control
Division

Date: 06/11/2010
Scale: NA
Design by: PPMF

Drawing Number
09-001.1

SHEET
13 of 13