MIAMI-DADE COUNTY
BUILDING AND NEIGHBORHOOD COMPLIANCE DEPARTMENT (BNC)
BOARD AND CODE ADMINISTRATION DIVISION

MIAMI-DADE COUNTY
PRODUCT CONTROL SECTION
11805 SW 26 Street, Room 208
Miami, Florida 33175-2474
T (786) 315-2590 F (786) 315-2599
www.miamidade.gov/building/home/asp

NOTICE OF ACCEPTANCE (NOA)

General Impact Glass & Windows Corp.
290 West 78 Road
Hialeah, FL 33014

SCOPE:

This NOA is being issued under the applicable rules and regulations governing the use of construction materials. The documentation submitted has been reviewed by Miami-Dade County Product Control Section and accepted by the Board of Rules and Appeals (BORA) to be used in Miami Dade County and other areas where allowed by the Authority Having Jurisdiction (AHJ).

This NOA shall not be valid after the expiration date stated below. The Miami-Dade County Product Control Section (In Miami Dade County) and/or the AHJ (in areas other than Miami Dade County) reserve the right to have this product or material tested for quality assurance purposes. If this product or material fails to perform in the accepted manner, the manufacturer will incur the expense of such testing and the AHJ may immediately revoke, modify, or suspend the use of such product or material within their jurisdiction. BORA reserves the right to revoke this acceptance, if it is determined by Miami-Dade County Product Control Section that this product or material fails to meet the requirements of the applicable building code. This product is approved as described herein, and has been designed to comply with the Florida Building Code, including the High Velocity Hurricane Zone.

DESCRIPTION: Series "12000 High Impact – Green World" Aluminum Window Wall System – L.M.I.

APPROVAL DOCUMENT: Drawing No. **10-055**, titled "High Impact Green World Fixed Glass Wall – Series 12000 Large Missile Laminated & Insulated Glass", sheets 1 through 5, 5a, and 6 through 24 of 24, dated 05/07/10 with revision 1 dated 12/16/10, prepared by Tilteco, Inc., signed and sealed by Walter A. Tillit, Jr., P.E., bearing the Miami-Dade County Product Control Approval stamp with the Notice of Acceptance number and approval date by the Miami-Dade County Product Control Section.

MISSILE IMPACT RATING: Large and Small Missile Impact Resistant

LABELING: Each unit shall bear a permanent label with the manufacturer's name or logo, city, state and following statement: "Miami-Dade County Product Control Approved", unless otherwise noted herein.

RENEWAL of this NOA shall be considered after a renewal application has been filed and there has been no change in the applicable building code negatively affecting the performance of this product.

TERMINATION of this NOA will occur after the expiration date or if there has been a revision or change in the materials, use, and/or manufacture of the product or process. Misuse of this NOA as an endorsement of any product, for sales, advertising or any other purposes shall automatically terminate this NOA. Failure to comply with any section of this NOA shall be cause for termination and removal of NOA.

ADVERTISEMENT: The NOA number preceded by the words Miami-Dade County, Florida, and followed by the expiration date may be displayed in advertising literature. If any portion of the NOA is displayed, then it shall be done in its entirety.

INSPECTION: A copy of this entire NOA shall be provided to the user by the manufacturer or its distributors and shall be available for inspection at the job site at the request of the Building Official.

This NOA consists of this page 1 and evidence pages E-1 and E-2, as well as approval document mentioned above.

The submitted documentation was reviewed by **Manuel Perez, P.E.**

MIAMI-DADE COUNTY APPROVED

NOTICE OF ACCEPTANCE: EVIDENCE SUBMITTED

A. DRAWINGS

1. Manufacturer's die drawings and sections.
2. Drawing No **10-055**, Sheets 1 through 5, 5A, and 6 through 24 of 24, titled "High Impact Green World Fixed Glass Wall – Series 12000 Large Missile Laminated & Insulated Glass", dated 05/07/10 with revision 1 dated 12/16/10, prepared by Tilteco, Inc., signed and sealed by Walter A. Tillit, Jr., P.E.

B. TESTS

1. Test reports on: 1) Air Infiltration Test, per FBC, TAS 202-94
   2) Uniform Static Air Pressure Test, Loading per FBC TAS 202-94
   3) Water Resistance Test, per FBC, TAS 202-94
   4) Large Missile Impact Test per FBC, TAS 201-94
   5) Cyclic Wind Pressure Loading per FBC, TAS 203-94

   along with marked-up drawings and installation diagram of series 12000 high impact Green World fixed glass wall captured system, prepared by Fenestration Testing Laboratory, Inc., Test Report No. **FTL-6179**, specimens **A1, B1, C1, D1** and **E1**, dated 06/24/10, and addendum letter dated 12/10/10, all signed and sealed by Jorge A. Causo, P.E.

C. CALCULATIONS

1. Anchor verification calculations and structural analysis, complying with FBC-2007, prepared by Tilteco, Inc., dated 09/23/10 and 12/16/10, signed and sealed by Walter A. Tillit, Jr., P.E.
2. Glazing complies with ASTM E1300-04.

D. QUALITY ASSURANCE

1. Miami-Dade Building and Neighborhood Compliance Department (BNC).

E. MATERIAL CERTIFICATIONS

1. Notice of Acceptance No. **09-0312.03** issued to **E.I. DuPont DeNemours & Co., Inc.** for their "**DuPont SentryGlas® Interlayer**" dated 05/13/09, expiring on 01/14/12.
2. Notice of Acceptance No. **09-0312.02** issued to **E.I. DuPont DeNemours & Co., Inc.** for their "**DuPont Butacite® PVB Interlayer**" dated 05/13/09, expiring on 12/11/10.

Manuel Perez, P.E.
Product Control Examiner
NOA No. 10-0923.04
Expiration Date: January 13, 2016
Approval Date: January 13, 2011

NOTICE OF ACCEPTANCE: EVIDENCE SUBMITTED

F. STATEMENTS

1. Statement letter of conformance, dated July 21, 2010, signed and sealed by Walter A. Tillit, Jr., P.E.
2. Statement letter of no financial interest, dated July 21, 2010, signed and sealed by Walter A. Tillit, Jr., P.E.
3. Dow Corning Corp. – Recommendations for joints 1" wide or greater, dated July 26, 2010 ,application for this specific job, prepared by Kevin Dunphy, Dow Corning Field Specialist.

G. OTHERS

1. None

Manuel Perez, P.E.
Product Control Examiner
NOA No. 10-0923.04
Expiration Date: January 13, 2016
Approval Date: January 13, 2011

HIGH IMPACT GREEN WORLD FIXED GLASS WALL SERIES 12000 LARGE MISSILE LAMINATED & INSULATED GLASS

GENERAL NOTES:

1. HIGH IMPACT GREEN WORLD FIXED GLASS WALL SERIES 12000 LARGE MISSILE LAMINATED & INSULATED GLASS, SHOWN ON THIS PRODUCT APPROVAL DOCUMENT (P.A.D.) HAS BEEN VERIFIED FOR COMPLIANCE IN ACCORDANCE WITH THE 2007 EDITION OF THE FLORIDA BUILDING CODE.
   PRODUCT MAY BE INSTALLED WITHIN HIGH VELOCITY HURRICANE ZONES.
   DESIGN WIND LOADS SHALL BE DETERMINED AS PER SECTION 1620 OF THE ABOVE MENTIONED CODE.
   IN ORDER TO VERIFY THAT ANCHORS ON THIS P.A.D., AS TESTED, WERE NOT OVERSTRESSED, A 33% INCREASE IN ALLOWABLE STRESS FOR WIND LOADS WAS NOT USED IN THEIR ANALYSIS, FASTENERS SPACING TO WOOD HAS BEEN DETERMINED IN ACCORDANCE WITH N.D.S. 2005 AND OR AVAILABLE TEST DATA FROM MANUFACTURER.
   THIS PRODUCT'S ADEQUACY FOR IMPACT AND WIND RESISTANCE HAS BEEN VERIFIED IN ACCORDANCE WITH SECTION 1626 OF THE ABOVE MENTIONED CODE AS PER PROTOCOLS TAS-201, TAS-202, TAS-203, PER FENESTRATION TESTING LABORATORY REPORT # 6179 AND AS PER SUBMITTED STRUCTURAL CALCULATIONS, PERFORMED AS PER SECTION 1612 OF THE FLORIDA BUILDING CODE.
2. MAXIMUM DESIGN PRESSURE RATING FOR THIS PRODUCT SHALL BE AS SHOWN ON SHEETS 5 THRU 15 & 23.
3. THIS PRODUCT WILL NOT REQUIRE AN APPROVED HURRICANE PROTECTION DEVICE.
4. THIS PRODUCT IS APPROVED FOR WATER INFILTRATION AT 19.5 p.s.f.
5. THIS PRODUCT COMPLIES WITH SECTIONS 2411.4.1 AND 2411.4.2 OF THE FLORIDA BUILDING CODE.
6. ALL ALUMINUM EXTRUSIONS SHALL BE ALUMINUM ASSOCIATION 6063-T6 ALLOY AND TEMPER. THE THICKNESS OF ALL EXTRUSIONS SHALL BE AS SHOWN ON SHEET 2 OF THIS DRAWING.
7. PROVIDE 1/4" OR 3/8" MAX. LOAD BEARING SHIM SPACE (TYP.), WHEN ALLOWED BY THIS DRAWING.
8. WOOD BUCKS NOT BY GENERAL IMPACT GLASS & WINDOWS, CORP. WOOD BUCKS MUST BE SOUTHERN PINE, G = 0.55. AND SHALL COMPLY WITH SECTIONS 2411.3.3.3 AND 2326 OF THE 2007 EDITION OF THE FLORIDA BUILDING CODE. MUST SUSTAIN LOADS IMPOSED BY GLAZING SYSTEM AND TRANSFER THEM TO THE BUILDING STRUCTURE.
9. REMAINING COMPONENTS FOR THIS PRODUCT SHALL BE AS INDICATED ON BILL OF MATERIALS, SHEET 3 OF THIS DRAWING.
10. ALL ALUMINUM EXTRUSIONS IN CONTACT WITH STEEL, CONCRETE AND WOOD SHALL COMPLY WITH SECTIONS 2003.8.4.2, 2003.8.4.4, 2003.8.5 AND 2003.8.6 OF THE FLORIDA BUILDING CODE, RESPECTIVELY.
11. SEE ANCHOR SCHEDULES ON SHEETS 8 THRU 13 FOR ANCHOR TYPE IDENTIFICATION AND SPACING.
12. SHOP DRAWINGS PREPARED BASED ON THIS APPROVAL AND TAKING INTO ACCOUNT THE SPECIFIC JOB CONDITIONS, SHALL BE SUBMITTED TO THE BUILDING OFFICIAL AS PART OF THE PERMIT DOCUMENTS.
13. STRUCTURAL SUBSTRATES NOTED ON THIS DRAWING AS "EXISTING STEEL BY OTHERS", POURED CONCRETE AND WOOD MUST WITHSTAND THE LOADS IMPOSED BY THIS PRODUCT.
14. PRODUCT'S MANUFACTURER LABEL SHALL BE PLACED ON A READILY VISIBLE LOCATION.
    ONE LABEL SHALL BE PLACED FOR EVERY UNIT. LABEL SHALL READ AS FOLLOWS:
    GENERAL IMPACT GLASS AND WINDOWS, CORP.
    HIALEAH, FLORIDA
    MIAMI-DADE COUNTY PRODUCT CONTROL APPROVED.
15. (A) THIS P.A.D. PREPARED BY THIS ENGINEER IS GENERIC AND DOES NOT PROVIDE INFORMATION FOR A SITE SPECIFIC PROJECT; I.E. WHERE THE SITE CONDITIONS DEVIATE FROM THE P.A.D.

    (B) CONTRACTOR TO BE RESPONSIBLE FOR THE SELECTION, PURCHASE AND INSTALLATION INCLUDING LIFE SAFETY OF THIS PRODUCT, BASED ON THIS P.A.D., PROVIDED HE/SHE DOES NOT DEVIATE FROM THE CONDITIONS DETAILED ON THIS DOCUMENT. CONSTRUCTION SAFETY AT SITE IS THE CONTRACTOR'S RESPONSIBILITY.

    (C) THIS P.A.D. WILL BE CONSIDERED INVALID IF ALTERED BY ANY MEANS.

    (D) SITE SPECIFIC PROJECTS SHALL BE PREPARED BY A FLORIDA REGISTERED ENGINEER OR ARCHITECT WHICH WILL BECOME THE ENGINEER OF RECORD (E.O.R.) FOR THE PROJECT AND WHO WILL BE RESPONSIBLE FOR THE PROPER USE OF THE P.A.D. ENGINEER OF RECORD, ACTING AS DELEGATED ENGINEER TO THE P.A.D., SHALL SUBMIT TO THIS LATTER SITE SPECIFIC DRAWING FOR REVIEW.

    (E) ORIGINAL P.A.D. SHALL BEAR THE DATE AND ORIGINAL SEAL AND SIGNATURE OF THE PROFESSIONAL ENGINEER OF RECORD THAT PREPARED IT.

INDEX:

SHEET 1: GENERAL NOTES, INDEX AND INSTRUCTIONS.
SHEET 2: HIGH IMPACT GREEN WORLD FIXED GLASS WALL SERIES 12000 COMPONENTS.
SHEET 3: GLAZING DETAILS & BILL OF MATERIALS.
SHEET 4: ELEVATIONS FOR HIGH IMPACT GREEN WORLD FIXED GLASS WALL SERIES 12000.
SHEET 5: MAXIMUM FRAME WIDTH "a" AND FRAME LENGTH "b" VERSUS DESIGN PRESSURE RATING "W" (psf) SCHEDULE, VALID ONLY FOR INSTALLATIONS WITH JAMBS J-1 AND J-2, AND MULLIONS M-1 AND M-2.
SHEET 5A: MAXIMUM FRAME WIDTH "a" AND FRAME LENGTH "b" VERSUS DESIGN PRESSURE RATING "W" (psf) SCHEDULE, VALID ONLY FOR INSTALLATIONS WITH JAMBS J-1A AND J-2A, AND MULLIONS M-1A AND M-2A.
SHEET 6: MAX. DESIGN PRESSURE RATING FOR INTERIOR VERTICAL & JAMB MULLIONS SPAN.
SHEET 7: MAX. DESIGN PRESSURE RATING FOR INTERIOR VERTICAL & JAMB MULLIONS SPAN. (CONTINUED)
SHEET 8: MAX. DESIGN PRESSURE RATING SCHEDULE FOR INTERIOR VERTICAL MULLIONS & JAMB MULLIONS HEAD/SILL CONNECTIONS FOR 1/4" MAX. LOAD BEARING SHIM SPACE.
SHEET 9: MAX. DESIGN PRESSURE RATING SCHEDULE FOR INTERIOR VERTICAL MULLIONS & JAMB MULLIONS HEAD/SILL CONNECTIONS FOR 1/4" MAX. LOAD BEARING SHIM SPACE. (CONTINUED)
SHEET 10: MAX. DESIGN PRESSURE RATING SCHEDULE FOR INTERIOR VERTICAL MULLIONS & JAMB MULLIONS HEAD/SILL CONNECTIONS FOR 1/4" MAX. LOAD BEARING SHIM SPACE. (CONTINUED)
SHEET 11: MAX. DESIGN PRESSURE RATING SCHEDULE FOR INTERIOR VERTICAL MULLIONS & JAMB MULLIONS HEAD/SILL CONNECTIONS FOR 3/8" MAX. LOAD BEARING SHIM SPACE.
SHEET 12: MAX. DESIGN PRESSURE RATING SCHEDULE FOR INTERIOR VERTICAL MULLIONS & JAMB MULLIONS HEAD/SILL CONNECTIONS FOR 3/8" MAX. LOAD BEARING SHIM SPACE. (CONTINUED)
SHEET 13: MAX. DESIGN PRESSURE RATING SCHEDULE FOR INTERIOR VERTICAL MULLIONS & JAMB MULLIONS HEAD/SILL CONNECTIONS FOR 3/8" MAX. LOAD BEARING SHIM SPACE. (CONTINUED)
SHEET 14: MAX. DESIGN PRESSURE RATING SCHEDULE FOR HORIZONTAL MULLIONS SPAN.
SHEET 15: MAX. DESIGN PRESSURE RATING SCHEDULE FOR HORIZONTAL MULLIONS SPAN. (CONTINUED)
SHEET 16: HORIZONTAL CONNECTION DETAILS.
SHEET 17: HEAD & SILL CONNECTIONS DETAILS.
SHEET 18: HEAD & SILL CONNECTIONS DETAILS. (CONTINUED)
SHEET 19: HORIZONTAL SECTIONS AT INTERIOR VERTICAL MULLIONS AT STRAIGHT GLASS WALLS APPLICATION.
SHEET 20: HORIZONTAL SECTIONS AT INTERIOR VERTICAL MULLIONS PLUS JAMB MULLIONS AT CURVED GLASS WALLS APPLICATION.
SHEET 21: HORIZONTAL SECTIONS AT JAMB MULLIONS AT STRAIGHT GLASS WALLS APPLICATION.
SHEET 22: ELEVATION FOR HIGH IMPACT GREEN WORLD FIXED GLASS WALL SERIES 12000 ADJACENT TO APPROVED DOOR (ON SEPARATE NOA).
SHEET 23: MAX. DESIGN PRESSURE RATING FOR DOOR JAMB MULLION SPAN.
SHEET 24: JOINT CONNECTION DETAIL & ARCHED HEAD ① SPLINE CONNECTION DETAIL.

INSTRUCTIONS:

STEP 1: DETERMINE DESIGN WIND LOAD REQUIREMENTS BASED ON WIND VELOCITY, BUILDING HEIGHT, WIND ZONE, USING APPLICABLE ASCE 7-05 STANDARD.

STEP 2: GO TO SCHEDULE ON SHEETS 5 AND 5A TO DETERMINE MAXIMUM DESIGN PRESSURE RATING "W" (psf) CAPACITY OF DESIRED GLASS SIZE BASED ON GLASS PANEL DIMENSIONS.

STEP 3: DETERMINE MAXIMUM INTERIOR MULLION AND JAMB MULLION SPAN "L"(FT) FOR A GIVEN MULLION EFFECTIVE SPACING "b", ON SCHEDULE ON SHEETS 6 & 7, AND SELECT ANCHOR OPTION W/ DESIGN PRESSURE RATING EQUAL OR GREATER THAN DESIGN WIND LOAD SPECIFIED IN STEP 1 USING SCHEDULES ON SHEET 8 THRU 13.

STEP 4: USING SCHEDULES ON SHEETS 14 & 15, VERIFY MAXIMUM DESIGN PRESSURE RATING OF HORIZONTAL MULLIONS (IF USED). FOR A GIVEN HORIZONTAL MULLION EFFECTIVE "D.L.O.".

STEP 5: THE LOWEST VALUE OF DESIGN PRESSURE RATINGS RESULTING FROM STEPS 2, 3 AND 4 SHALL APPLY TO THE ENTIRE SYSTEM.

Approved as complying with the Florida Building Code
Date JAN. 13, 2011
NOA# 10-0923.04
Miami Dade Product Control Division
By: Manuel Perez

MIAMI-DADE COUNTY

WALTER A. TILLIT JR.
LICENSE
No. 44167
STATE OF FLORIDA
PROFESSIONAL ENGINEER

P.E. SEAL/SIGNATURE/DATE

FLORIDA BUILDING CODE (HIGH VELOCITY HURRICANE ZONE)

©2010 TILTECO, INC

TILTECO INC.
TILLIT TESTING & ENGINEERING COMPANY
6355 N.W. 36th, St., Ste. 305, VIRGINIA GARDENS, FL 33166
Phone : (305)871-1530 . Fax : (305)871-1531
e-mail: tilteco@aol.com
EB-0006719
WALTER A. TILLIT Jr. P.E.
FLORIDA Lic. # 44167

HIGH IMPACT GREEN WORLD FIXED GLASS WALL SERIES 12000 LARGE MISSILE LAMINATED & INSULATED GLASS

GENERAL IMPACT GLASS & WINDOWS
The Clear Solution
290 WEST 78 ROAD
HIALEAH, FL. 33014
PHONE: (305) 558-8103
FAX: (305) 558-6665
www.generalimpact.com

REV. No	DESCRIPTION	DATE	REV. No	DESCRIPTION	DATE
1	REFERENCE 5A WAS ADDED	12/16/10	3	-	-
2	-	-	4	-	-

M.C.V.
DRAWN BY

05/07/10
DATE

10-055
DRAWING No

COMPONENTS FOR HIGH IMPACT GREEN WORLD FIXED GLASS WALL SERIES 12000

SCALE: 3/8" = 1"

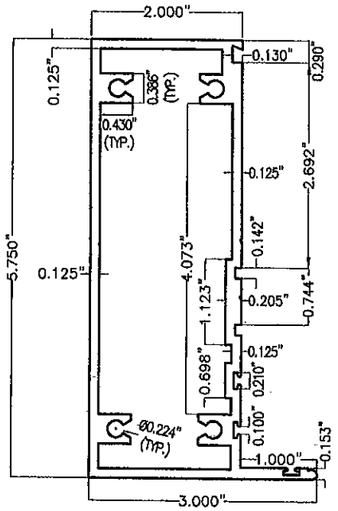

1 FRAME JAMB, HEAD & SILL
(1/8" THICK)

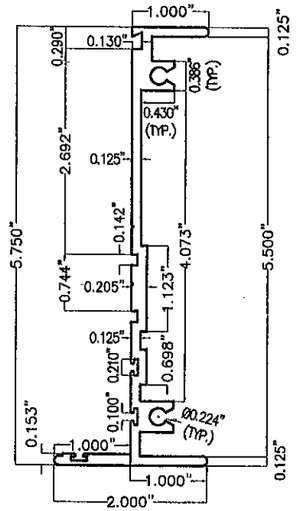

2 FEMALE MULLION
(1/8" THICK)

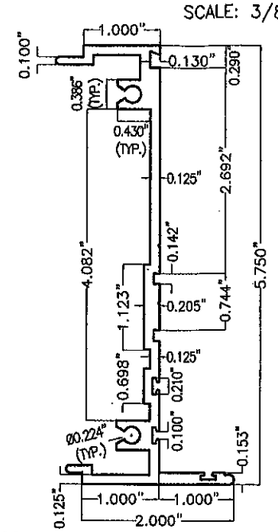

3 MALE MULLION
(1/8" THICK)

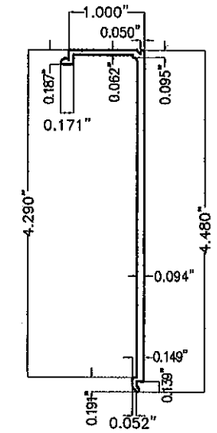

4 LAMINATED WINDOW COVER

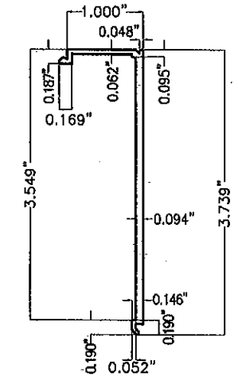

4A INSULATED WINDOW COVER

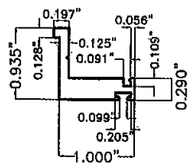

5 GLAZING BEAD ANGLE
6063-T6 ALUMINUM ALLOY

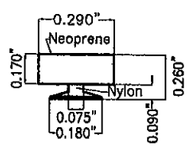

6 SOLID RUBBER GASKET
NEOPRENE/NYLON
N.T.S.

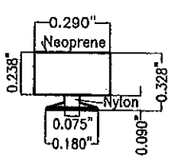

6A SOLID RUBBER GASKET
NEOPRENE/NYLON
N.T.S.

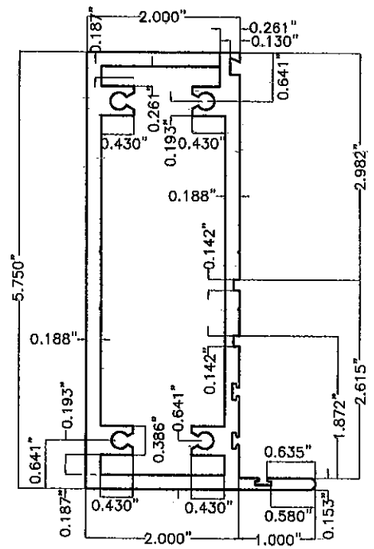

15 FRAME JAMB, HEAD & SILL
(3/16" THICK)

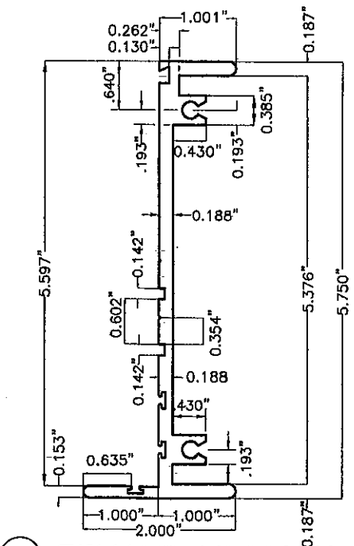

16 FEMALE MULLION
(3/16" THICK)

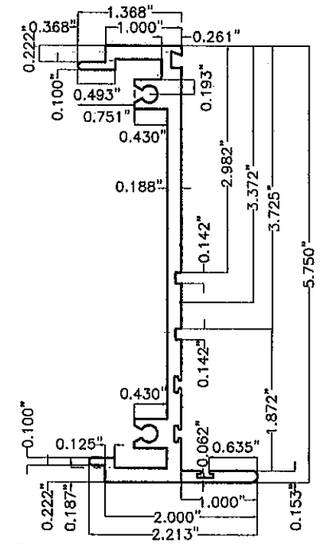

17 MALE MULLION
(3/16" THICK)

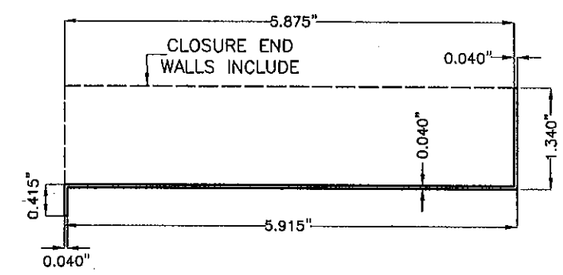

18 SILL FLASHING
(OPTIONAL)
3105-H14 ALUMINUM ALLOY

Approved as complying with the Florida Building Code
Date JAN. 13, 2011
NOA# 10-0923.04
Miami Dade Product Control Division
By Manuel Perez

MIAMI-DADE COUNTY

WALTER A. TILLIT JR. LICENSE No. 44167 STATE OF FLORIDA PROFESSIONAL ENGINEER

P.E. SEAL/SIGNATURE/DATE

FLORIDA BUILDING CODE (HIGH VELOCITY HURRICANE ZONE)

©2010 TILTECO, INC

TILTECO INC.
TILLIT TESTING & ENGINEERING COMPANY
6355 N.W. 36th. St., Ste. 305, VIRGINIA GARDENS, FL. 33166
Phone : (305)871-1930 . Fax : (305)871-1931
e-mail: tilteco@aol.com
EB-0008719
WALTER A. TILLIT Jr. P.E.
FLORIDA Lic. # 44167

HIGH IMPACT GREEN WORLD FIXED GLASS WALL SERIES 12000 LARGE MISSILE LAMINATED & INSULATED GLASS

GENERAL IMPACT GLASS & WINDOWS
The Clear Solution
290 WEST 78 ROAD
HIALEAH, FL. 33014
PHONE: (305) 558-8103
FAX: (305) 558-6665
www.generalimpact.com

REV. No	DESCRIPTION	DATE	REV. No	DESCRIPTION	DATE
1			3	-	-
2	-	-	4	-	-

M.C.V.
DRAWN BY

05/07/10
DATE

10-055
DRAWING No

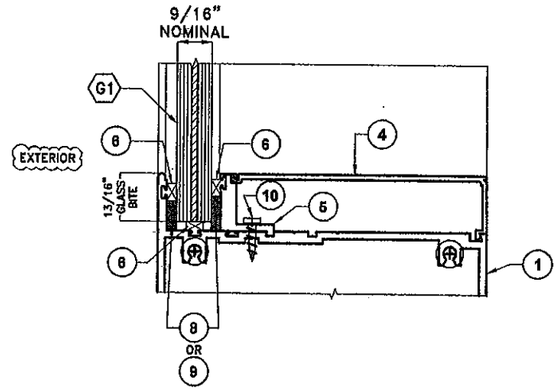

GLAZING DETAIL FOR (G1)

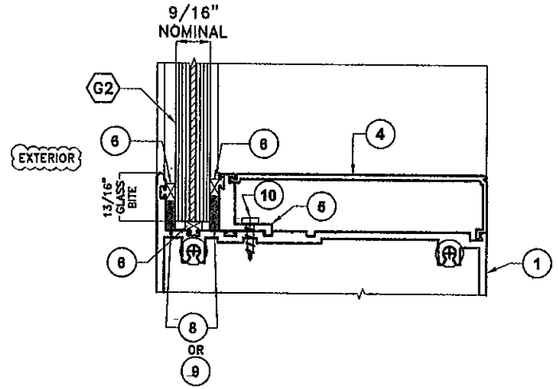

GLAZING DETAIL FOR (G2)

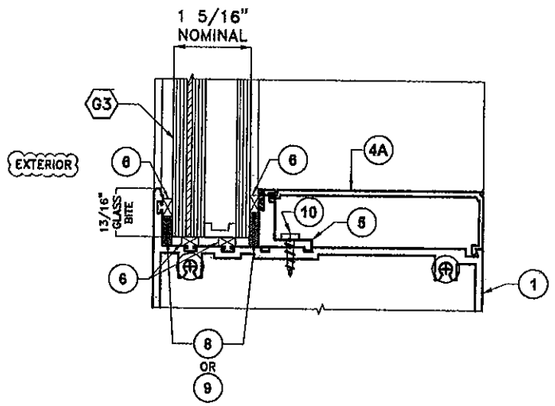

GLAZING DETAIL FOR (G3)

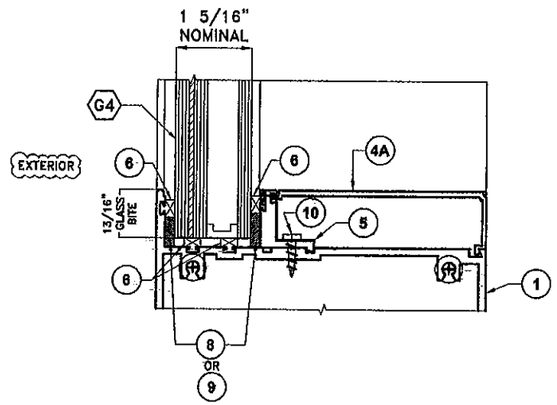

GLAZING DETAIL FOR (G4)

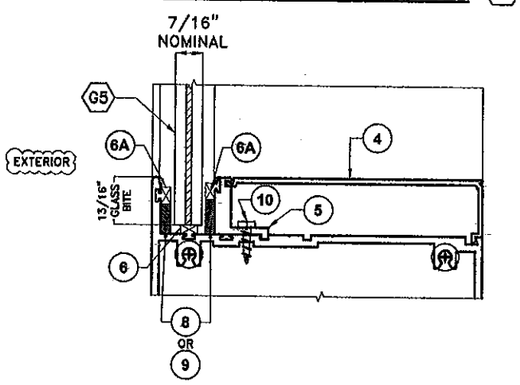

GLAZING DETAIL FOR (G5)

GLAZING DETAILS

SCALE: 3/8" = 1"

BILL OF MATERIALS

ITEM #	DESCRIPTION	DIMENSIONS & REMARKS		MATERIAL
1	FRAME JAMB, HEAD & SILL	5.75"x3"x0.125" THK.		6063-T6 ALUMINUM
2	FEMALE MULLION	5.75"x2"x0.125" THK.		6063-T6 ALUMINUM
3	MALE MULLION	5.75"x2"x0.125" THK.		6063-T6 ALUMINUM
4	LAMINATED WINDOW COVER	4.682"x1"xVARIES THK.		6063-T6 ALUMINUM
4A	INSULATED WINDOW COVER	3.941"x1"xVARIES THK.		6063-T6 ALUMINUM
5	GLAZING BEAD ANGLE	0.929"x0.906"xVARIES THK.		6063-T6 ALUMINUM
6	SOLID RUBBER GASKET	0.260"x0.290"xVARIES THK.		NEOPRENE/NYLON
6A	SOLID RUBBER GASKET	0.328"x0.290"xVARIES THK.		NEOPRENE/NYLON
8	STRUCTURAL SILICONE DOW CORNING 995	ALL AROUND GLASS		SILICONE OPTIONAL TO 9
9	STRUCTURAL SILICONE DOW CORNING 795	ALL AROUND GLASS		SILICONE OPTIONAL TO 8
10	GLAZING BEAD ANGLE ASSEMBLY SCREW	1/4"ø x1" TEK SCREW @ 8" o.c.		STEEL
11	SPLINE ASSEMBLY SCREW	1/4"ø x2 3/4" F.H. TEK SCREW		STEEL
11A	ARCH SPLINE ASSEMBLY SCREW	1/4"ø x2 3/4" F.H. TEK SCREW		STEEL
12	JOINT DETAIL (METAL TO METAL) GASKET 1/16 XLP W/ RUBBER BASED PSA	OPTIONAL TO 13 FOR INTERNAL JOINT. MANUFACTURED BY FRANK LOWE RUBBER & GASKET CO.		CLOSED CELL POLYETHYLENE FOAM TAPE COATED IN ONE SIDE
13	STRUCTURAL SILICONE 795 DOW CORNING	OPTIONAL TO 12 FOR INTERNAL JOINT, PLUS EXTERIOR FRAME SEALANT ALL AROUND PERIMETER		SILICONE
14	MULLION ASSEMBLY BOLT	1/4"Ø-20x2 1/2" THRU BOLT W/ NUT @ 12" O.C. (START @ 6" O.C. FROM TOP/BOTTOM)		STAINLESS STEEL AISI 304 SERIES
15	FRAME JAMB, HEAD & SILL	5.75"x3"x0.188" THK.		6063-T6 ALUMINUM
16	FEMALE MULLION	5.75"x2"x0.188" THK.		6063-T6 ALUMINUM
17	MALE MULLION	5.75"x2"x0.188" THK.		6063-T6 ALUMINUM
18	SILL FLASHING (OPTIONAL)	1.340" MIN.x5.915" MIN.x0.415" MIN.x0.040" THK.		3105-H14 ALUMINUM
G1	9/16" NOMINAL LAMINATED GLASS W/ 1/4" H.S. GLASS + 0.090" DUPONT SENTRYGLAS® INTERLAYER + 1/4" H.S. GLASS.	E.I. DUPONT DE NEMOURS & Co., INC.	NOA # 09-0312.03	GLASS
G2	9/16" NOMINAL LAMINATED GLASS W/ 1/4" H.S. GLASS + 0.090" DUPONT BUTACITE® PVB INTERLAYER + 1/4" H.S. GLASS.	E.I. DUPONT DE NEMOURS & Co., INC.	NOA # 09-0312.02	GLASS
G3	1 5/16" NOMINAL INSULATED GLASS W/ 1/4" H.S. GLASS + 0.090" DUPONT SENTRYGLAS® INTERLAYER + 1/4" H.S. GLASS + 1/2" AIR SPACE + 1/4" INTERIOR MONOLITHIC TEMPERED GLASS	E.I. DUPONT DE NEMOURS & Co., INC.	NOA # 09-0312.03	GLASS
G4	1 5/16" NOMINAL INSULATED GLASS W/ 1/4" H.S. GLASS + 0.090" DUPONT BUTACITE® PVB INTERLAYER + 1/4" H.S. GLASS + 1/2" AIR SPACE + 1/4" INTERIOR MONOLITHIC TEMPERED GLASS	E.I. DUPONT DE NEMOURS & Co., INC.	NOA # 09-0312.02	GLASS
G5	7/16" NOMINAL LAMINATED GLASS W/ 3/16" H.S. GLASS + 0.090" DUPONT BUTACITE® PVB INTERLAYER + 3/16" H.S. GLASS.	E.I. DUPONT DE NEMOURS & Co., INC.	NOA # 09-0312.02	GLASS

Approved as complying with the Florida Building Code
Date JAN. 13, 2011
NOA# 10-0923.04
Miami Dade Product Control Division
By Manuel Perez

MIAMI-DADE COUNTY

WALTER A. TILLIT JR.
LICENSE
No. 44167
STATE OF FLORIDA
PROFESSIONAL ENGINEER

P.E. SEAL/SIGNATURE/DATE

FLORIDA BUILDING CODE (HIGH VELOCITY HURRICANE ZONE)

©2010 TILTECO, INC

TILTECO INC.
TILLIT TESTING & ENGINEERING COMPANY
6355 N.W. 36th. St., Ste. 303, VIRGINIA GARDENS, Fl. 33166
Phone : (305)871-1530 . Fax : (305)871-1531
e-mail: tilteco@aol.com
EB-0006719
WALTER A. TILLIT Jr. P.E.
FLORIDA Lic. # 44167

HIGH IMPACT GREEN-WORLD FIXED GLASS WALL SERIES 12000 LARGE MISSILE LAMINATED & INSULATED GLASS

GENERAL IMPACT GLASS & WINDOWS
The Clear Solution
290 WEST 78 ROAD
HIALEAH, FL. 33014
PHONE: (305) 558-8103
FAX: (305) 558-6665
www.generalimpact.com

REV. No	DESCRIPTION	DATE	REV. No	DESCRIPTION	DATE
1	DEFINED COMP. 13	11/29/10	3	–	–
2	–	–	4	–	–

M.C.V.
DRAWN BY

05/07/10
DATE

10-055
DRAWING No

ELEVATIONS FOR HIGH IMPACT GREEN WORLD FIXED GLASS WALL SERIES 12000

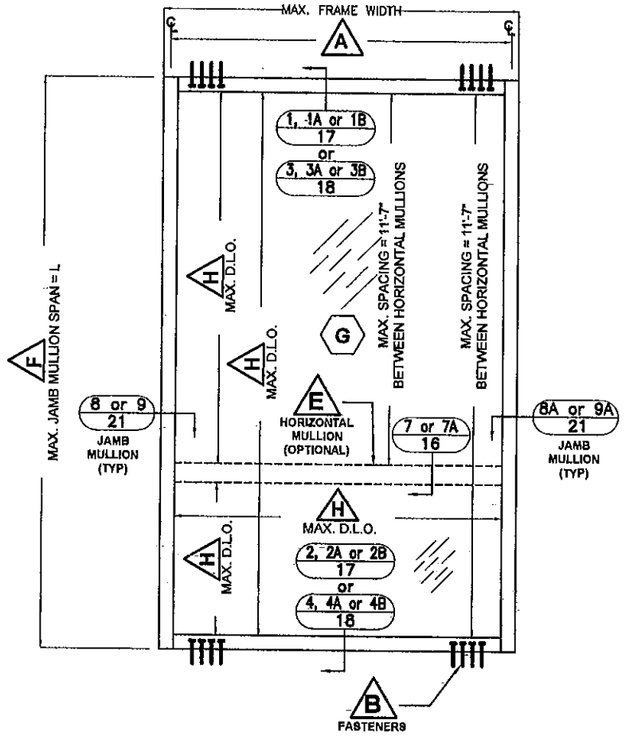

SINGLE PANEL *

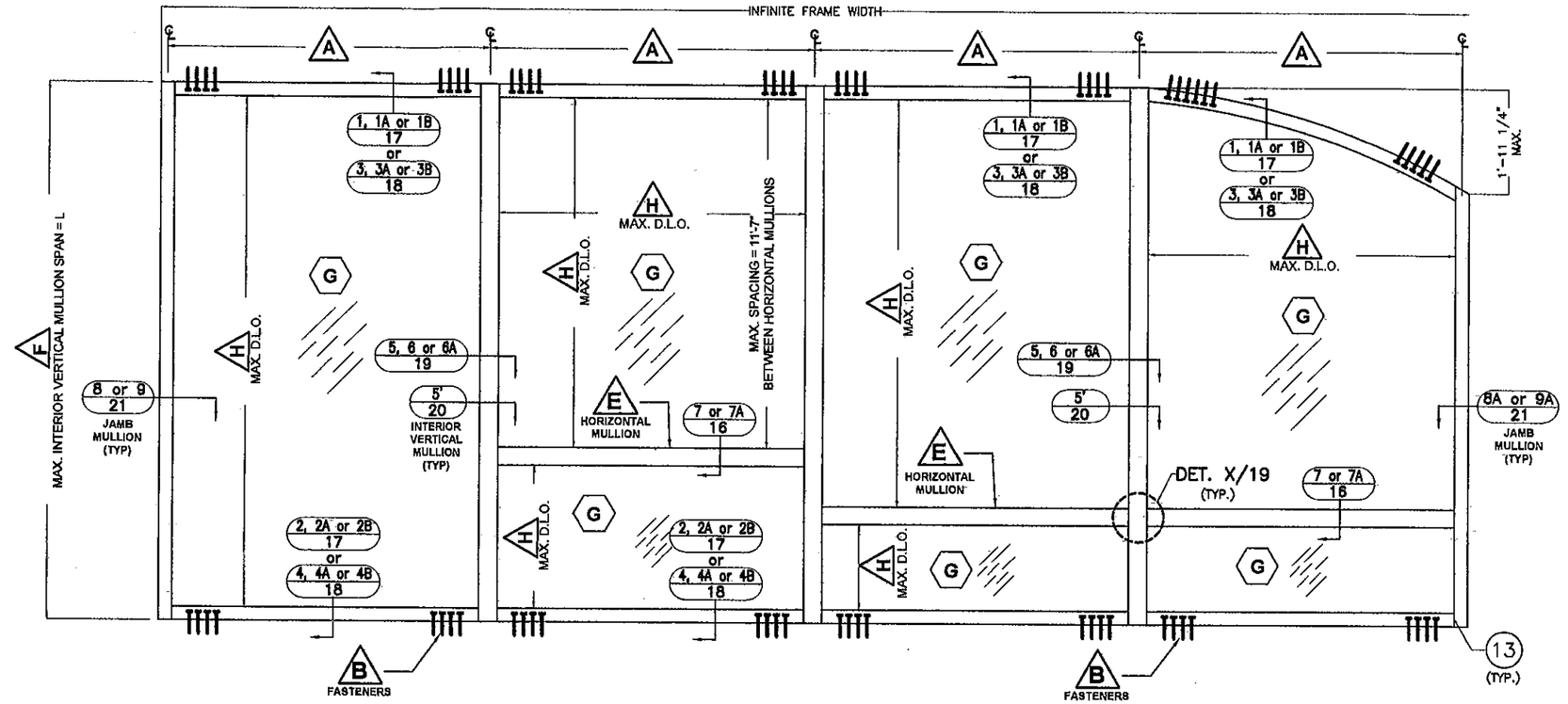

MULTIPLE PANELS *

FOOT NOTES:

- (A) FOR MAXIMUM INTERIOR VERTICAL MULLION AND JAMB MULLION SPACING SEE SHEETS 6 & 7.
- (B) FOR HEAD AND SILL FASTENERS QUANTITY, TYPES AND SPECS SEE SHEETS 8 THRU 13.
- (E) USE OF HORIZONTAL MULLION LIMITED BY SCHEDULES ON SHEETS 14 & 15.
- (F) FOR MAXIMUM INTERIOR VERTICAL MULLION AND JAMB MULLION SPAN SEE SHEETS 6 & 7.
- (G) FOR GLAZING DETAILS SEE SHEET 3 AND FOR GLASS SCHEDULE SEE SHEETS 5 AND 5A.
- (H) FOR MAXIMUM D.L.O. SEE SCHEDULE ON SHEETS 5 AND 5A.

* NOTE: ELEVATIONS FOR SINGLE & MULTIPLE PANELS FIXED GLASS WALL SERIES 12000 MAY BE INSTALLED ROTATED 90° FROM ABOVE SHOWN ORIENTATION.

Approved as complying with the Florida Building Code
Date JAN. 13, 2011
NOA# 10-0923.04
Miami Dade Product Control Division
By Manuel Perez

MIAMI–DADE COUNTY

WALTER A. TILLIT JR.
LICENSE
No. 44167
STATE OF FLORIDA
PROFESSIONAL ENGINEER

P.E. SEAL/SIGNATURE/DATE

FLORIDA BUILDING CODE (HIGH VELOCITY HURRICANE ZONE)

©2010 TILTECO, INC

TILTECO INC.
TILLIT TESTING & ENGINEERING COMPANY
6355 N.W. 36th. St., Ste. 305, VIRGINIA GARDENS, Fl. 33166
Phone : (305)871-1530 . Fax : (305)871-1531
e-mail: tilteco@aol.com
EB-0006719
WALTER A. TILLIT Jr. P.E.
FLORIDA Lic. # 44167

HIGH IMPACT GREEN WORLD FIXED GLASS WALL SERIES 12000 LARGE MISSILE LAMINATED & INSULATED GLASS

GENERAL IMPACT GLASS & WINDOWS
The Clear Solution
290 WEST 78 ROAD
HIALEAH, FL. 33014
PHONE: (305) 558-8103
FAX: (305) 558-6665
www.generalimpact.com

REV. No	DESCRIPTION	DATE	REV. No	DESCRIPTION	DATE
1	REFERENCE SHEET 5A WAS ADDED	12/16/10	3	–	–
2	–	–	4	–	–

M.C.V.
DRAWN BY

05/07/10
DATE

10-055
DRAWING No

MAXIMUM FRAME WIDTH "a" AND FRAME LENGTH "b" VERSUS DESIGN PRESSURE RATING "W" (psf)

SCHEDULE *, VALID ONLY FOR INSTALLATIONS W/ JAMBS J-1 AND J-2, AND MULLIONS M-1 AND M-2

GLASS TYPE G1

DIMENSION "a"	DIMENSION "b"	MAXIMUM DESIGN PRESSURE RATING "W"(psf)
18" or less	18" or less	±130.0
18"	18" to 139"	±130.0
24"	24" to 139"	±130.0
30"	30" to 139"	±130.0
36"	38" to 139"	±130.0
42"	42" to 139"	±130.0
48"	48" to 126.0"	±130.0
	> 126.0 to 139"	±20.0
54"	54" to 96"	±130.0
	> 96" to 102"	±130.0
	> 102" to 108.5"	±130.0
	> 108.5" to 112"	±130.0
	> 112 to 139"	±20.0
60"	60" to 84"	±130.0
	> 84" to 90"	±130.0
	> 90" to 96"	±130.0
	> 88" to 98"	±130.0
	> 98" to 139"	±20.0
66"	66" to 78"	±130.0
	> 78" to 84"	±130.0
	> 84" to 90"	±99.5
	> 89.5" to 139"	±20.0
72"	72" to 78"	±130.0
	> 78" to 82"	±130.0
	>82" to 84"	±91.0
	>84" to 139"	±20.0
76" or less	76" or less	±130.0

GLASS TYPE G2

DIMENSION "a"	DIMENSION "b"	MAXIMUM DESIGN PRESSURE RATING "W"(psf)
18" or less	18" or less	±90.0
18"	18" to 139"	±90.0
24"	24" to 139"	±90.0
30"	30" to 139"	±90.0
38"	36" to 139"	±90.0
42"	42" to 120"	±90.0
48"	48" to 107"	±90.0
54"	54" to 95"	±84.1
60"	60" to 120"	±80.0
66"	66" to 108"	±79.6
72"	72" to 100"	±79.5
78"	78" to 92.5"	±76.4
84"	84" to 86"	±70.9

GLASS TYPE G3

DIMENSION "a"	DIMENSION "b"	MAXIMUM DESIGN PRESSURE RATING "W"(psf)
18" or less	18" or less	±130.0
18"	18" to 139"	±130.0
24"	24" to 139"	±130.0
30"	30" to 139"	±130.0
36"	36" to 139"	±130.0
42"	42" to 139"	±130.0
48"	48" to 122"	±130.0
	> 122 to 139"	±20.0
54"	54" to 96"	±130.0
	> 96" to 108"	±130.0
	> 108 to 139"	±20.0
60"	60" to 84"	±130.0
	> 84" to 98"	±130.0
	> 98" to 139"	±20.0
66"	66" to 78"	±130.0
	> 78" to 84"	±130.0
	> 84" to 87.5"	±130.0
	> 87.5" to 90"	±107.1
	> 90" to 139"	±20.0
72"	72" to 78"	±130.0
	> 78" to 80.5"	±130.0
	> 80.5" to 84"	±98.1
	> 84" to 139"	±20.0
76" or less	76" or less	±130.0

GLASS TYPE G4

DIMENSION "a"	DIMENSION "b"	MAXIMUM DESIGN PRESSURE RATING "W"(psf)
18" or less	18" or less	±80.0
18"	18" to 139"	±80.0
24"	24" to 139"	±80.0
30"	30" to 139"	±80.0
36"	36" to 139"	±80.0
42"	42" to 120"	±80.0
	> 120" to 139"	±80.0
48"	48" to 107"	±80.0
	>107" to 139"	±80.0
54"	54" to 95"	±84.1
	>95" to 133.5"	±80.0
60"	60" to 120"	±80.0
66"	66" to 108"	±80.0
	> 108" to 109.5"	±79.6
72"	72" to 96"	±80.0
	> 96" to 100"	±79.5
76" or less	76" or less	±88.0
78"	78" to 91"	±76.1
84" or less	> 84" to 86"	±70.95

GLASS TYPE G5

DIMENSION "a"	DIMENSION "b"	MAXIMUM DESIGN PRESSURE RATING "W"(psf)
18" or less	18" or less	±90.0
18"	18" to 139"	±90.0
24"	24" to 139"	±90.0
30"	30" to 139"	±90.0
36"	36" to 139"	±90.0
42"	42" to 120"	±90.0
48"	48" to 107"	±90.0
54"	54" to 95"	±84.1
60"	60" to 85.5"	±75.7
66"	68" to 78"	±68.8
71.5" or less	71.5" or less	±63.3

* DETERMINATION OF MAXIMUM DAY LIGHT OPENING (D.L.O.) AT EACH END OF GLASS GIVEN "a" & "b"

SIDE	MAX. DAY LIGHT OPENING	
	(D.L.O.) Formula at vertical & horizontal mullions	(D.L.O.) Formula at jamb, head & sill frames
MAX. D.L.O. (a) (SHORT SIDE)	"a"−6.00"	"a"−6.00"
MAX. D.L.O. (b) (LONG SIDE)	"b"−6.00"	"b"−6.00"

DIMENSIONS LEGEND

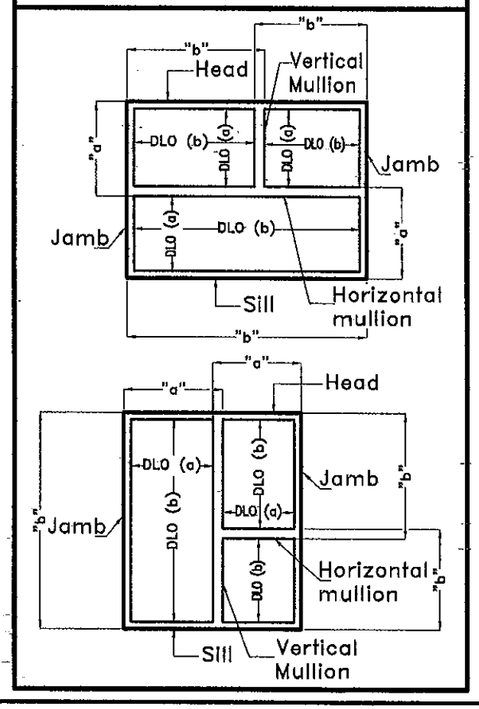

NOTE:

1. SEE SHEET 3 FOR GLAZING DETAILS AND GLASS DESCRIPTIONS ON BILL OF MATERIALS.

Approved as complying with the Florida Building Code
Date JAN. 13, 2011
NOA# 10-0923.04
Miami Dade Product Control Division
By Manuel Perez

MIAMI–DADE COUNTY

WALTER A. TILLIT JR. LICENSE No. 44167 STATE OF FLORIDA PROFESSIONAL ENGINEER

P.E. SEAL/SIGNATURE/DATE

FLORIDA BUILDING CODE (HIGH VELOCITY HURRICANE ZONE)

©2010 TILTECO, INC

TILTECO INC.
TILLIT TESTING & ENGINEERING COMPANY
6355 N.W. 36th. St., Ste. 305, VIRGINIA GARDENS, Fl. 33166
Phone : (305)871-1530 . Fax : (305)871-1531
e-mail: tilteco@aol.com
EB-0006719
WALTER A. TILLIT Jr. P.E.
FLORIDA Lic. # 44167

HIGH IMPACT GREEN WORLD FIXED GLASS WALL SERIES 12000 LARGE MISSILE LAMINATED & INSULATED GLASS

GENERAL IMPACT GLASS & WINDOWS The Clear Solution
290 WEST 78 ROAD
HIALEAH, FL. 33014
PHONE: (305) 558-8103
FAX: (305) 558-6665
www.generalimpact.com

REV. No	DESCRIPTION	DATE	REV. No	DESCRIPTION	DATE
1	GLASS SCHEDULE FIXED	11/29/10	3	–	–
2	–	–	4	–	–

M.C.V. DRAWN BY

05/07/10 DATE

10-055 DRAWING No

MAXIMUM FRAME WIDTH "a" AND FRAME LENGTH "b" VERSUS DESIGN PRESSURE RATING "W" (psf)

SCHEDULE *, VALID ONLY FOR INSTALLATIONS W/ JAMBS J-1A AND J-2A, AND MULLIONS M-1A AND M-2A

GLASS TYPE G1

DIMENSION "a"	DIMENSION "b"	MAXIMUM DESIGN PRESSURE RATING "W"(psf)
18" or less	18" or less	+130,-140.0
18"	18" to 139"	+130,-140.0
24"	24" to 139"	+130,-140.0
30"	30" to 139"	+130,-140.0
36"	36" to 139"	+130,-140.0
42"	42" to 139"	+130,-140.0
48"	48" to 126.0"	+130,-140.0
	> 126.0 to 139"	±80.0
54"	54" to 96"	+130,-140.0
	> 96" to 102"	+130,-138.5
	> 102" to 108.5"	+130,-136.1
	> 108.5" to 112"	±130.0
	> 112 to 133.5"	±80.0
	> 133.5 to 139"	±40.0
60"	60" to 84"	+130,-140.0
	> 84" to 90"	+130,-137.5
	> 90" to 96"	+130,-133.3
	> 96" to 98"	±132.3
	> 98" to 120"	±80.0
	> 120" to 139"	±40.0
66"	66" to 78"	+130,-140.0
	> 78" to 84"	+130,-137.3
	> 84" to 89.5"	±104.8
	> 89.5" to 108"	±79.6
	> 108" to 139"	±40.0
72"	72" to 78"	+130,-140.0
	> 78" to 82"	+130,-136.8
	>82" to 84"	±98.2
	>84" to 139"	±40.0
76" or less	76" or less	+130,-136.9
77" or less	77" or less	±91.8
78"	78" to 91"	±75.2
	> 91" to 136"	±38.2
84" or less	84" or less	±69.9
	> 84" to 128.5"	±35.4
90"	90" to 118"	±33.1
96"	96" to 110.5"	±31.0
98"	98" to 108"	±30.2

GLASS TYPE G2

DIMENSION "a"	DIMENSION "b"	MAXIMUM DESIGN PRESSURE RATING "W"(psf)
18" or less	18" or less	±90.0
18"	18" to 139"	±90.0
24"	24" to 139"	±90.0
30"	30" to 139"	±90.0
36"	36" to 139"	±90.0
42"	42" to 120"	±90.0
48"	48" to 107"	±90.0
54"	54" to 95"	±84.1
60"	60" to 120"	±80.0
66"	66" to 108"	±79.6
72"	72" to 100"	±79.5
78"	78" to 92.5"	±76.4
84"	84" to 86"	±70.9

* DETERMINATION OF MAXIMUM DAY LIGHT OPENING (D.L.O.) AT EACH END OF GLASS GIVEN "a" & "b"

SIDE	MAX. DAY LIGHT OPENING	
	(D.L.O.) Formula at vertical & horizontal mullions	(D.L.O.) Formula at jamb, head & sill frames
MAX. D.L.O. (a) (SHORT SIDE)	"a"−6.00"	"a"−6.00"
MAX. D.L.O. (b) (LONG SIDE)	"b"−6.00"	"b"−6.00"

GLASS TYPE G3

DIMENSION "a"	DIMENSION "b"	MAXIMUM DESIGN PRESSURE RATING "W"(psf)
18" or less	18" or less	+130,-140.0
18"	18" to 139"	+130,-140.0
24"	24" to 139"	+130,-140.0
30"	30" to 139"	+130,-140.0
36"	36" to 139"	+130,-140.0
42"	42" to 139"	+130,-140.0
48"	48" to 126"	+130,-140.0
	> 126 to 139"	±80.0
54"	54" to 96"	+130,-140.0
	> 96" to 102"	+130,-138.5
	> 102 to 112"	±130
	> 112" to 133.5"	±80.0
	> 133.5" to 139"	±40.0
60"	60" to 84"	+130,-140.0
	> 84" to 90"	+130,-137.5
	> 90" to 96"	+130,-133.3
	>96 to 101"	±117.8
	> 101" to 120"	±80.0
	> 120" to 139"	±40.0
66"	66" to 78"	+130,-140.0
	> 78" to 84"	+130,-137.3
	> 84" to 87.5"	+130,-133.5
	> 87.5" to 90"	±107.1
	> 90" to 106"	±79.6
	> 108" to 139"	±40.0
72"	72" to 78"	+130,-140.0
	> 78" to 80.5"	+130,-138.1
	> 80.5" to 84"	±98.1
	> 84" to 98"	±80.0
	> 96" to 139"	±40.0
76" or less	76" or less	+130,-134.9
77" or less	77" or less	±91.8
78"	78" to 91"	±75.3
	> 91" to 138"	±38.2
84"	84" to 84"	±69.9
	> 84" to 128.5"	±35.4
90"	90" to 120"	±33.1
96"	98" to 112.5"	±31.0
98"	98" to 109.5"	±30.2

GLASS TYPE G4

DIMENSION "a"	DIMENSION "b"	MAXIMUM DESIGN PRESSURE RATING "W"(psf)
18" or less	18" or less	±90.0
18"	18" to 139"	±90.0
24"	24" to 139"	±90.0
30"	30" to 139"	±90.0
36"	36" to 139"	±90.0
42"	42" to 120"	±90.0
	> 120" to 139"	±80.0
48"	48" to 107"	±90.0
	>107" to 139"	±80.0
54"	54" to 95"	±84.1
	>95" to 133.5"	±80.0
60"	60" to 120"	±80.0
66"	66" to 108"	±80.0
	> 108" to 109.5"	±79.6
72"	72" to 96"	±80.0
	> 96" to 100"	±79.5
78" or less	76" or less	±88.0
78"	78" to 91"	±76.1
84" or less	>84" to 86"	±70.95

GLASS TYPE G5

DIMENSION "a"	DIMENSION "b"	MAXIMUM DESIGN PRESSURE RATING "W"(psf)
18" or less	18" or less	±90.0
18"	18" to 139"	±90.0
24"	24" to 139"	±90.0
30"	30" to 139"	±90.0
36"	36" to 139"	±90.0
42"	42" to 120"	±90.0
48"	48" to 107"	±90.0
54"	54" to 95"	±84.1
60"	60" to 85.5"	±75.7
66"	66" to 78"	±68.8
71.5" or less	71.5" or less	±63.3

DIMENSIONS LEGEND

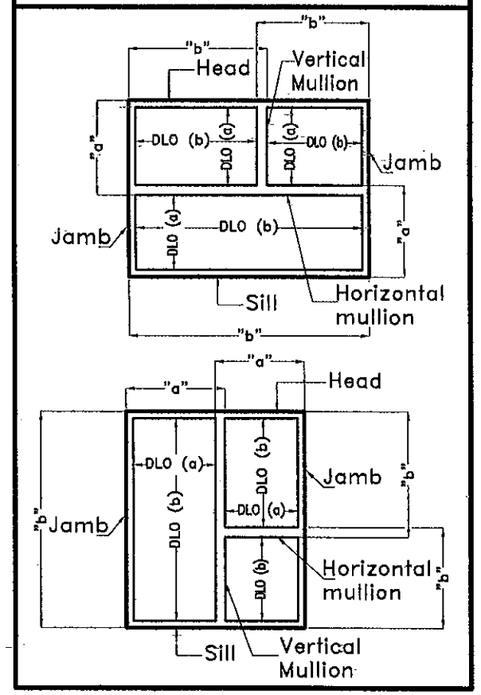

NOTE:

1. SEE SHEET 3 FOR GLAZING DETAILS AND GLASS DESCRIPTIONS ON BILL OF MATERIALS.

Approved as complying with the Florida Building Code
Date JAN. 13, 2011
NOA# 10-0923.04
Miami Dade Product Control Division
By Manuel Perez

MIAMI–DADE COUNTY

WALTER A. TILLIT JR. LICENSE No. 44167 STATE OF FLORIDA PROFESSIONAL ENGINEER

P.E. SEAL/SIGNATURE/DATE

FLORIDA BUILDING CODE (HIGH VELOCITY HURRICANE ZONE)

©2010. TILTECO, INC

TILTECO INC.
TILLIT TESTING & ENGINEERING COMPANY
6355 N.W. 36th. St., Ste. 305, VIRGINIA GARDENS, FL. 33166
Phone : (305)871-1530 . Fax : (305)871-1531
e-mail: tilteco@aol.com
EB-0006719
WALTER A. TILLIT Jr. P.E.
FLORIDA Lic. # 44167

HIGH IMPACT-GREEN WORLD FIXED GLASS WALL SERIES 12000 LARGE MISSILE LAMINATED & INSULATED GLASS

GENERAL IMPACT GLASS & WINDOWS
The Clear Solution
290 WEST 78 ROAD
HIALEAH, FL. 33014
PHONE: (305) 558-8103
FAX: (305) 558-6665
www.generalimpact.com

REV. No	DESCRIPTION	DATE	REV. No	DESCRIPTION	DATE
1	–	–	3	–	–
2	–	–	4	–	–

M.C.V.
DRAWN BY

05/07/10
DATE

10-055
DRAWING No

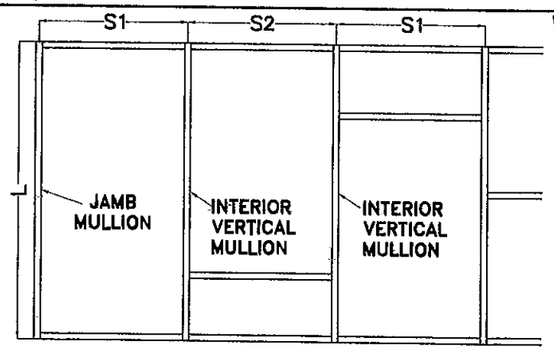

ELEVATION W/ INTERIOR VERTICAL MULLION @ MULTIPLE PANELS

"L" = MAXIMUM INTERIOR VERTICAL MULLION SPAN

EFFECTIVE SPACING: "b" = $\frac{S_1 + S_2}{2}$, FOR MULTIPLE PANELS

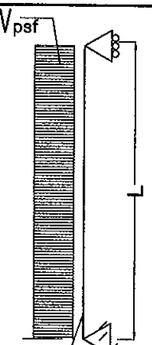

INTERIOR VERTICAL MULLION OR JAMB MULLION

SIDE VIEW

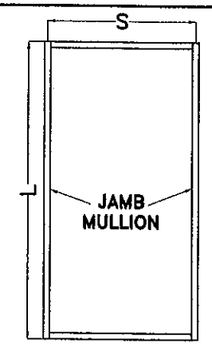

ELEVATION W/ JAMB MULLION @ SINGLE PANEL

"L" = MAXIMUM JAMB MULLION SPAN

EFFECTIVE SPACING: "b" = S, FOR SINGLE PANEL.

M-1	CASE 1: MULLION (2)+(3)+(2)(4)+(2)(5)	Ix = 16.999 in4 Sx = 5.586 in3
WATER INFILTRATION IS 19.5 psf		IN TERMS OF ALUM.

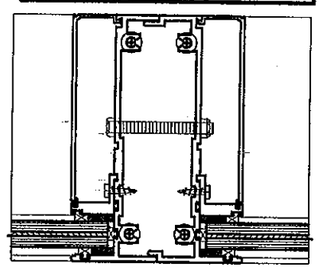

M-2	CASE 2: MULLION (2)+(3)+(2)(4A)+(2)(5)	Ix = 15.726 in4 Sx = 5.422 in3
WATER INFILTRATION IS 19.5 psf		IN TERMS OF ALUM.

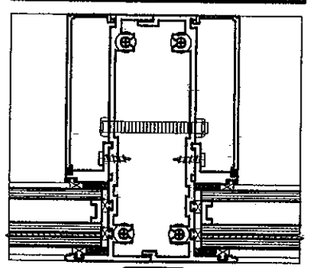

J-1	CASE 1: JAMB MULLION (1)+(4)+(5)	Ix = 13.075 in4 Sx = 4.351 in3
WATER INFILTRATION IS 19.5 psf		IN TERMS OF ALUM.

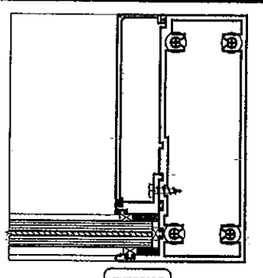

J-2	CASE 2: JAMB MULLION (1)+(4A)+(5)	Ix = 12.421 in4 Sx = 4.277 in3
WATER INFILTRATION IS 19.5 psf		IN TERMS OF ALUM.

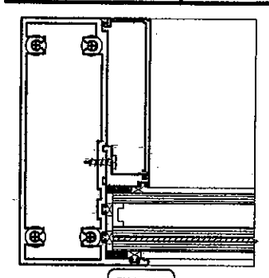

M-1A	CASE 3: MULLION (16)+(17)+(2)(4)+(2)(5)	Ix = 19.618 in4 Sx = 6.491 in3
WATER INFILTRATION IS 19.5 psf		IN TERMS OF ALUM.

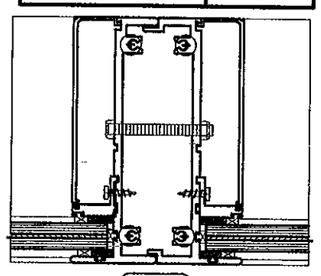

M-2A	CASE 4: MULLION (16)+(17)+(2)(4A)+(2)(5)	Ix = 18.322 in4 Sx = 6.346 in3
WATER INFILTRATION IS 19.5 psf		IN TERMS OF ALUM.

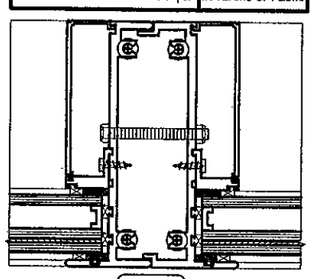

J-1A	CASE 3: JAMB MULLION (16)+(4)+(5)	Ix = 16.084 in4 Sx = 5.415 in3
WATER INFILTRATION IS 19.5 psf		IN TERMS OF ALUM.

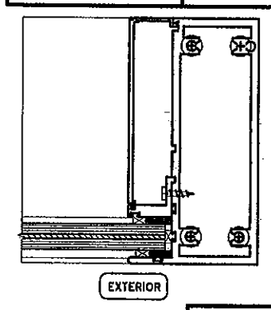

J-2A	CASE 4: JAMB MULLION (18)+(4A)+(5)	Ix = 15.300 in4 Sx = 5.283 in3
WATER INFILTRATION IS 19.5 psf		IN TERMS OF ALUM.

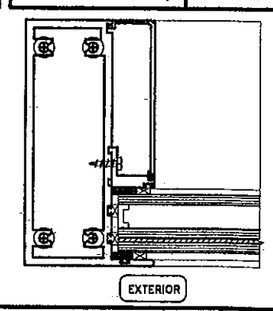

CASES DEFINITIONS

CASE 1 :	M-1	INTERIOR VERTICAL MULLION: 1/8" THICK W/ LAMINATED GLASS (SEE DET. 5 ON SHEET 19)
	J-1	JAMB MULLION: 1/8" THICK W/ LAMINATED GLASS (SEE DET. 8 OR 8A ON SHEETS 20 & 21)
CASE 2 :	M-2	INTERIOR VERTICAL MULLION: 1/8" THICK W/ INSULATED GLASS (SEE DET. 6 ON SHEET 19)
	J-2	JAMB MULLION: 1/8" THICK W/ INSULATED GLASS (SEE DET. 8 OR 8A ON SHEET 21)
CASE 3 :	M-1A	INTERIOR VERTICAL MULLION: 3/16" THICK W/ LAMINATED GLASS (SEE DET. 5 ON SHEET 19)
	J-1A	JAMB MULLION: 3/16" THICK W/ LAMINATED GLASS (SEE DET. 8 OR 8A ON SHEETS 20 & 21)
CASE 4 :	M-2A	INTERIOR VERTICAL MULLION: 3/16" THICK W/ INSULATED GLASS (SEE DET. 6 ON SHEET 19)
	J-2A	JAMB MULLION: 3/16" THICK W/ INSULATED GLASS (SEE DET. 8 OR 8A ON SHEET 21)

MAXIMUM INTERIOR VERTICAL MULLION & JAMB MULLION SPAN "L"(FT) SCHEDULE FOR A GIVEN DESIGN PRESSURE RATING "W" (psf) & A GIVEN MULLION EFFECTIVE SPACING "b"

MAXIMUM DESIGN PRESSURE RATING	MAX. EFFECTIVE SPACING	MAXIMUM 1/8" THICK MULLION SPAN "L"(FT)		MAXIMUM 3/16" THICK MULLION SPAN "L"(FT)	
		Laminated Glass	Insulated Glass	Laminated Glass	Insulated Glass
		CASE 1	CASE 2	CASE 3	CASE 4
"W" (psf)	"b" (Ft-In)	M-1/J-1	M-2/J-2	M-1A/J-1A	M-2A/J-2A
± 40.0	3 '- 6 "	15 '- 4 "	14 '- 11 "	15 '- 9 "	15 '- 9 "
	4 '- 0 "	14 '- 8 "	14 '- 3 "	15 '- 4 "	15 '- 0 "
	4 '- 6 "	14 '- 1 "	13 '- 9 "	14 '- 9 "	14 '- 5 "
	5 '- 0 "	13 '- 7 "	13 '- 3 "	14 '- 3 "	13 '- 11 "
	5 '- 6 "	13 '- 2 "	12 '- 10 "	13 '- 10 "	13 '- 6 "
	6 '- 0 "	12 '- 10 "	12 '- 6 "	13 '- 5 "	13 '- 2 "
	6 '- 6 "	12 '- 6 "	12 '- 2 "	13 '- 1 "	12 '- 9 "
	7 '- 0 "	12 '- 2 "	11 '- 10 "	12 '- 9 "	12 '- 6 "
± 45.0	3 '- 6 "	14 '- 9 "	14 '- 4 "	15 '- 5 "	15 '- 1 "
	4 '- 0 "	14 '- 1 "	13 '- 9 "	14 '- 9 "	14 '- 5 "
	4 '- 6 "	13 '- 7 "	13 '- 2 "	14 '- 3 "	13 '- 11 "
	5 '- 0 "	13 '- 1 "	12 '- 9 "	13 '- 9 "	13 '- 5 "
	5 '- 6 "	12 '- 8 "	12 '- 4 "	13 '- 4 "	13 '- 0 "
	6 '- 0 "	12 '- 4 "	12 '- 0 "	12 '- 11 "	12 '- 7 "
	6 '- 6 "	12 '- 6 "	12 '- 2 "	13 '- 1 "	12 '- 9 "
	7 '- 0 "	11 '- 8 "	11 '- 5 "	12 '- 3 "	12 '- 0 "
± 50.0	3 '- 6 "	14 '- 3 "	13 '- 10 "	14 '- 11 "	14 '- 7 "
	4 '- 0 "	13 '- 7 "	13 '- 3 "	14 '- 3 "	13 '- 11 "
	4 '- 6 "	13 '- 1 "	12 '- 9 "	13 '- 9 "	13 '- 5 "
	5 '- 0 "	12 '- 8 "	12 '- 4 "	13 '- 3 "	12 '- 11 "
	5 '- 6 "	12 '- 3 "	11 '- 11 "	12 '- 10 "	12 '- 7 "
	6 '- 0 "	11 '- 11 "	11 '- 7 "	12 '- 6 "	12 '- 2 "
	6 '- 6 "	11 '- 7 "	11 '- 3 "	12 '- 2 "	11 '- 10 "
	7 '- 0 "	11 '- 3 "	11 '- 0 "	11 '- 10 "	11 '- 7 "
± 55.0	3 '- 6 "	13 '- 9 "	13 '- 5 "	14 '- 5 "	14 '- 2 "
	4 '- 0 "	13 '- 2 "	12 '- 10 "	13 '- 10 "	13 '- 6 "
	4 '- 6 "	12 '- 6 "	12 '- 4 "	13 '- 4 "	13 '- 0 "
	5 '- 0 "	12 '- 3 "	11 '- 11 "	12 '- 10 "	12 '- 7 "
	5 '- 6 "	11 '- 10 "	11 '- 7 "	12 '- 5 "	12 '- 2 "
	6 '- 0 "	11 '- 6 "	11 '- 3 "	12 '- 1 "	11 '- 10 "
	6 '- 6 "	11 '- 3 "	10 '- 11 "	11 '- 9 "	11 '- 6 "
	7 '- 0 "	10 '- 11 "	10 '- 8 "	11 '- 6 "	11 '- 3 "
± 60.0	3 '- 6 "	13 '- 5 "	13 '- 1 "	14 '- 0 "	13 '- 9 "
	4 '- 0 "	12 '- 10 "	12 '- 6 "	13 '- 5 "	13 '- 2 "
	4 '- 6 "	12 '- 4 "	12 '- 0 "	12 '- 11 "	12 '- 7 "
	5 '- 0 "	11 '- 11 "	11 '- 7 "	12 '- 6 "	12 '- 2 "
	5 '- 6 "	11 '- 6 "	11 '- 3 "	12 '- 1 "	11 '- 10 "
	6 '- 0 "	11 '- 2 "	10 '- 11 "	11 '- 9 "	11 '- 6 "
	6 '- 6 "	10 '- 11 "	10 '- 7 "	11 '- 5 "	11 '- 2 "
	7 '- 0 "	10 '- 7 "	10 '- 4 "	11 '- 2 "	10 '- 11 "
± 65.0	3 '- 6 "	13 '- 0 "	12 '- 8 "	13 '- 8 "	13 '- 4 "
	4 '- 0 "	12 '- 6 "	12 '- 2 "	13 '- 1 "	12 '- 9 "
	4 '- 6 "	12 '- 0 "	11 '- 6 "	12 '- 7 "	12 '- 3 "
	5 '- 0 "	11 '- 7 "	11 '- 3 "	12 '- 2 "	11 '- 10 "
	5 '- 6 "	11 '- 3 "	10 '- 11 "	11 '- 9 "	11 '- 6 "
	6 '- 0 "	10 '- 11 "	10 '- 7 "	11 '- 5 "	11 '- 2 "
	6 '- 6 "	10 '- 7 "	10 '- 4 "	11 '- 1 "	10 '- 10 "
	7 '- 0 "	10 '- 4 "	10 '- 1 "	10 '- 10 "	10 '- 7 "

MAXIMUM INTERIOR VERTICAL MULLION & JAMB MULLION SPAN "L"(FT) SCHEDULE FOR A GIVEN DESIGN PRESSURE RATING "W" (psf) & A GIVEN MULLION EFFECTIVE SPACING "b" (CONTINUED)

MAXIMUM DESIGN PRESSURE RATING	MAX. EFFECTIVE SPACING	MAXIMUM 1/8" THICK MULLION SPAN "L"(FT)		MAXIMUM 3/16" THICK MULLION SPAN "L"(FT)	
		Laminated Glass	Insulated Glass	Laminated Glass	Insulated Glass
		CASE 1	CASE 2	CASE 3	CASE 4
"W" (psf)	"b" (Ft-In)	M-1/J-1	M-2/J-2	M-1A/J-1A	M-2A/J-2A
± 70.0	3 '- 6 "	12 '- 9 "	12 '- 5 "	13 '- 4 "	13 '- 0 "
	4 '- 0 "	12 '- 2 "	11 '- 10 "	12 '- 9 "	12 '- 6 "
	4 '- 6 "	11 '- 8 "	11 '- 5 "	12 '- 3 "	12 '- 0 "
	5 '- 0 "	11 '- 3 "	11 '- 0 "	11 '- 10 "	11 '- 7 "
	5 '- 6 "	10 '- 11 "	10 '- 8 "	11 '- 6 "	11 '- 3 "
	6 '- 0 "	10 '- 7 "	10 '- 4 "	11 '- 2 "	10 '- 11 "
	6 '- 6 "	10 '- 4 "	10 '- 1 "	10 '- 10 "	10 '- 7 "
	7 '- 0 "	10 '- 1 "	9 '- 10 "	10 '- 7 "	10 '- 4 "
± 75.0	3 '- 6 "	12 '- 5 "	12 '- 1 "	13 '- 0 "	12 '- 9 "
	4 '- 0 "	11 '- 11 "	11 '- 7 "	12 '- 6 "	12 '- 2 "
	4 '- 6 "	11 '- 5 "	11 '- 2 "	12 '- 0 "	11 '- 9 "
	5 '- 0 "	11 '- 0 "	10 '- 9 "	11 '- 7 "	11 '- 4 "
	5 '- 6 "	10 '- 6 "	10 '- 5 "	11 '- 3 "	11 '- 0 "
	6 '- 0 "	10 '- 5 "	10 '- 1 "	10 '- 11 "	10 '- 6 "
	6 '- 6 "	10 '- 1 "	9 '- 10 "	10 '- 7 "	10 '- 4 "
	7 '- 0 "	9 '- 10 "	9 '- 7 "	10 '- 4 "	10 '- 1 "
± 80.0	3 '- 6 "	12 '- 2 "	11 '- 10 "	12 '- 9 "	12 '- 6 "
	4 '- 0 "	11 '- 8 "	11 '- 4 "	12 '- 2 "	11 '- 11 "
	4 '- 6 "	11 '- 2 "	10 '- 11 "	11 '- 9 "	11 '- 6 "
	5 '- 0 "	10 '- 10 "	10 '- 6 "	11 '- 4 "	11 '- 1 "
	5 '- 6 "	10 '- 6 "	10 '- 2 "	11 '- 0 "	10 '- 9 "
	6 '- 0 "	10 '- 0 "	9 '- 11 "	10 '- 0 "	10 '- 0 "
	6 '- 6 "	9 '- 11 "	9 '- 8 "	10 '- 0 "	10 '- 0 "
	7 '- 0 "	9 '- 8 "	9 '- 5 "	10 '- 0 "	9 '- 11 "
± 85.0	3 '- 6 "	11 '- 11 "	11 '- 7 "	12 '- 6 "	12 '- 3 "
	4 '- 0 "	11 '- 5 "	11 '- 1 "	11 '- 11 "	11 '- 8 "
	4 '- 6 "	11 '- 0 "	10 '- 6 "	11 '- 6 "	11 '- 3 "
	5 '- 0 "	10 '- 7 "	10 '- 4 "	11 '- 1 "	10 '- 10 "
	5 '- 6 "	10 '- 3 "	10 '- 0 "	10 '- 9 "	10 '- 6 "
	6 '- 0 "	10 '- 0 "	9 '- 6 "	10 '- 0 "	10 '- 3 "
	6 '- 6 "	9 '- 8 "	9 '- 5 "	10 '- 0 "	9 '- 11 "
	7 '- 0 "	9 '- 6 "	9 '- 3 "	9 '- 11 "	9 '- 8 "
± 90.0	3 '- 6 "	11 '- 8 "	11 '- 5 "	12 '- 3 "	12 '- 0 "
	4 '- 0 "	11 '- 2 "	10 '- 11 "	11 '- 9 "	11 '- 6 "
	4 '- 6 "	10 '- 9 "	10 '- 6 "	11 '- 3 "	11 '- 0 "
	5 '- 0 "	10 '- 5 "	10 '- 1 "	10 '- 11 "	10 '- 8 "
	5 '- 6 "	10 '- 1 "	9 '- 10 "	10 '- 7 "	10 '- 4 "
	6 '- 0 "	9 '- 9 "	9 '- 6 "	10 '- 0 "	10 '- 0 "
	6 '- 6 "	9 '- 6 "	9 '- 3 "	10 '- 0 "	9 '- 9 "
	7 '- 0 "	9 '- 3 "	9 '- 1 "	9 '- 9 "	9 '- 6 "
± 95.0	3 '- 8 "	11 '- 6 "	11 '- 2 "	12 '- 1 "	11 '- 9 "
	4 '- 0 "	11 '- 0 "	10 '- 8 "	11 '- 6 "	11 '- 3 "
	4 '- 6 "	10 '- 7 "	10 '- 3 "	11 '- 1 "	10 '- 10 "
	5 '- 0 "	10 '- 2 "	9 '- 11 "	10 '- 8 "	10 '- 5 "
	5 '- 6 "	9 '- 11 "	9 '- 8 "	10 '- 4 "	10 '- 2 "
	6 '- 0 "	9 '- 7 "	9 '- 4 "	10 '- 0 "	9 '- 10 "
	6 '- 6 "	9 '- 4 "	9 '- 1 "	9 '- 10 "	9 '- 7 "
	7 '- 0 "	9 '- 1 "	8 '- 11 "	9 '- 7 "	9 '- 4 "

Approved as complying with the Florida Building Code
Date JAN. 13, 2011
NOA# 10-0923.04
Miami Dade Product Control Division
By Manuel Perez

MIAMI–DADE COUNTY

WALTER A. TILLIT JR.
LICENSE
No. 44167
STATE OF FLORIDA
PROFESSIONAL ENGINEER

P.E. SEAL/SIGNATURE/DATE

FLORIDA BUILDING CODE (HIGH VELOCITY HURRICANE ZONE)

©2010 TILTECO, INC

TILTECO INC.
TILLIT TESTING & ENGINEERING COMPANY
6355 N.W. 36th. St., Ste. 305, VIRGINIA GARDENS, Fl. 33166
Phone : (305)871-1530 . Fax : (305)871-1531
e-mail: tilteco@aol.com
ES-0006719
WALTER A. TILLIT Jr. P.E.
FLORIDA Lic. # 44167

HIGH IMPACT GREEN WORLD FIXED GLASS WALL SERIES 12000 LARGE MISSILE LAMINATED & INSULATED GLASS

GENERAL IMPACT GLASS & WINDOWS
The Clear Solution
290 WEST 78 ROAD
HIALEAH, FL. 33014
PHONE: (305) 558-8103
FAX: (305) 558-6665
www.generalimpact.com

REV. No	DESCRIPTION	DATE	REV. No	DESCRIPTION	DATE
1	MULLION SPAN FIXED	11/29/10	3	–	–
2	–	–	4	–	–

M.C.V.
DRAWN BY

05/07/10
DATE

10-055
DRAWING No

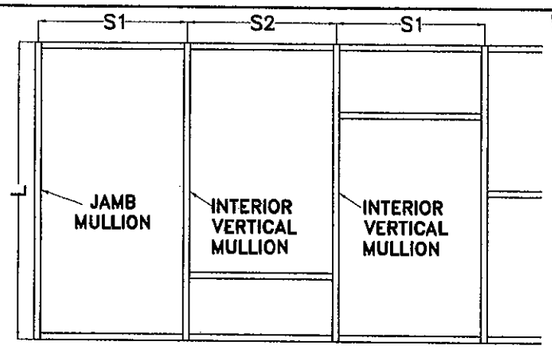

ELEVATION W/ INTERIOR VERTICAL MULLION @ MULTIPLE PANELS

"L" = MAXIMUM INTERIOR VERTICAL MULLION SPAN

EFFECTIVE SPACING: "b" = $\frac{S_1 + S_2}{2}$, FOR MULTIPLE PANELS

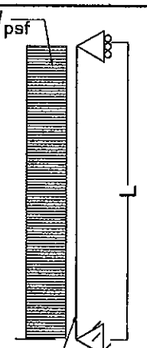

INTERIOR VERTICAL MULLION OR JAMB MULLION

SIDE VIEW

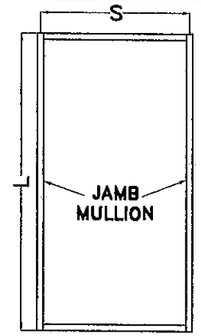

ELEVATION W/ JAMB MULLION @ SINGLE PANEL

"L" = MAXIMUM JAMB MULLION SPAN

EFFECTIVE SPACING: "b" = S, FOR SINGLE PANEL.

M-1	CASE 1: MULLION (2)+(3)+(2)(4)+(2)(5)	Ix = 16.999 in4 Sx = 5.566 in3
WATER INFILTRATION IS 19.5 psf		IN TERMS OF ALUM.

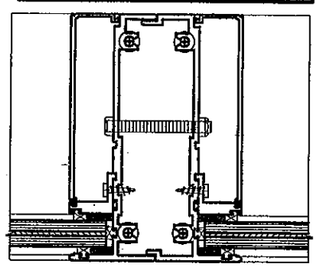

M-2	CASE 2: MULLION (2)+(3)+(2)(4A)+(2)(5)	Ix = 15.726 in4 Sx = 5.422 in3
WATER INFILTRATION IS 19.5 psf		IN TERMS OF ALUM.

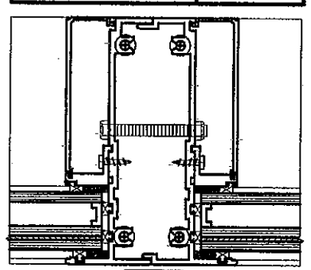

J-1	CASE 1: JAMB MULLION (1)+(4)+(5)	Ix = 13.075 in4 Sx = 4.351 in3
WATER INFILTRATION IS 19.5 psf		IN TERMS OF ALUM.

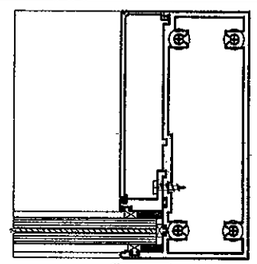

J-2	CASE 2: JAMB MULLION (1)+(4A)+(5)	Ix = 12.421 in4 Sx = 4.277 in3
WATER INFILTRATION IS 19.5 psf		IN TERMS OF ALUM.

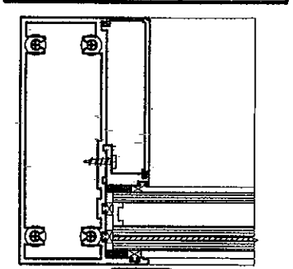

M-1A	CASE 3: MULLION (16)+(17)+(2)(4)+(2)(5)	Ix = 19.618 in4 Sx = 6.491 in3
WATER INFILTRATION IS 19.5 psf		IN TERMS OF ALUM.

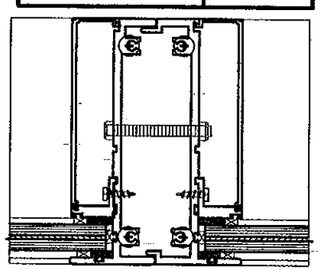

M-2A	CASE 4: MULLION (16)+(17)+(2)(4A)+(2)(5)	Ix = 18.322 in4 Sx = 8.346 in3
WATER INFILTRATION IS 19.5 psf		IN TERMS OF ALUM.

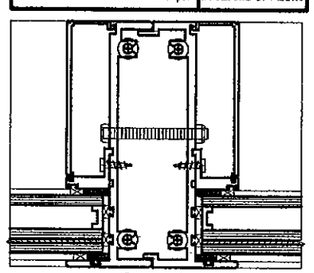

J-1A	CASE 3: JAMB MULLION (15)+(4)+(5)	Ix = 18.084 in4 Sx = 5.415 in3
WATER INFILTRATION IS 19.5 psf		IN TERMS OF ALUM.

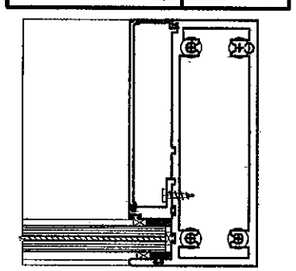

J-2A	CASE 4: JAMB MULLION (15)+(4A)+(5)	Ix = 15.300 in4 Sx = 5.283 in3
WATER INFILTRATION IS 19.5 psf		IN TERMS OF ALUM.

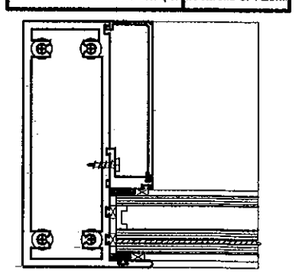

CASES DEFINITIONS

CASE 1 :	M-1	INTERIOR VERTICAL MULLION: 1/8" THICK W/ LAMINATED GLASS (SEE DET. 5 ON SHEET 19)
	J-1	JAMB MULLION: 1/8" THICK W/ LAMINATED GLASS (SEE DET. 8 OR 8A ON SHEETS 20 & 21)
CASE 2 :	M-2	INTERIOR VERTICAL MULLION: 1/8" THICK W/ INSULATED GLASS (SEE DET. 6 ON SHEET 19)
	J-2	JAMB MULLION: 1/8" THICK W/ INSULATED GLASS (SEE DET. 8 OR 8A ON SHEET 21)
CASE 3 :	M-1A	INTERIOR VERTICAL MULLION: 3/16" THICK W/ LAMINATED GLASS (SEE DET. 5 ON SHEET 19)
	J-1A	JAMB MULLION: 3/16" THICK W/ LAMINATED GLASS (SEE DET. 8 OR 8A DN SHEETS 20 & 21)
CASE 4 :	M-2A	INTERIOR VERTICAL MULLION: 3/16" THICK W/ INSULATED GLASS (SEE DET. 6 ON SHEET 19)
	J-2A	JAMB MULLION: 3/16" THICK W/ INSULATED GLASS (SEE DET. 8 OR 8A ON SHEET 21)

Approved as complying with the Florida Building Code
Date: JAN. 13, 2011
NOA# 10-0923.04
Miami Dade Product Control Division
By: Manuel Perez

MIAMI–DADE COUNTY

WALTER A. TILLIT JR.
LICENSE
No. 44167
STATE OF FLORIDA
PROFESSIONAL ENGINEER

P.E. SEAL/SIGNATURE/DATE

MAXIMUM INTERIOR VERTICAL MULLION AND JAMB MULLION SPAN "L"(FT) SCHEDULE FOR A GIVEN DESIGN PRESSURE RATING "W" (psf) & A GIVEN MULLION EFFECTIVE SPACING "b" (CONTINUED)

MAXIMUM DESIGN PRESSURE RATING	MAX. EFFECTIVE SPACING	MAXIMUM 1/8" THICK MULLION SPAN "L"(FT)		MAXIMUM 3/16" THICK MULLION SPAN "L"(FT)	
		Laminated Glass	Insulated Glass	Laminated Glass	Insulated Glass
		CASE 1	CASE 2	CASE 3	CASE 4
"W" (psf)	"b" (ft-in)	M-1/J-1	M-2/J-2	M-1A/J-1A	M-2A/J2A
± 100.0	3'-6"	11'-3"	11'-0"	11'-10"	11'-7"
	4'-0"	10'-10"	10'-6"	11'-4"	11'-1"
	4'-6"	10'-5"	10'-1"	10'-11"	10'-8"
	5'-0"	10'-0"	9'-9"	10'-6"	10'-3"
	5'-6"	9'-9"	9'-6"	10'-2"	9'-11"
	6'-0"	9'-5"	9'-2"	9'-11"	9'-8"
	6'-6"	9'-2"	8'-11"	9'-8"	9'-5"
	7'-0"	8'-11"	8'-9"	9'-4"	9'-2"
± 105.0	3'-6"	11'-1"	10'-10"	11'-8"	11'-5"
	4'-0"	10'-7"	10'-4"	11'-2"	10'-11"
	4'-6"	10'-3"	9'-11"	10'-9"	10'-6"
	5'-0"	9'-10"	9'-7"	10'-4"	10'-1"
	5'-6"	9'-7"	9'-4"	10'-0"	9'-10"
	6'-0"	9'-3"	9'-1"	9'-9"	9'-6"
	6'-6"	9'-0"	8'-10"	9'-5"	9'-3"
	7'-0"	8'-8"	8'-7"	9'-1"	9'-0"
± 110.0	3'-6"	10'-11"	10'-8"	11'-6"	11'-3"
	4'-0"	10'-6"	10'-2"	11'-0"	10'-9"
	4'-6"	10'-1"	9'-10"	10'-7"	10'-4"
	5'-0"	9'-9"	9'-6"	10'-2"	9'-11"
	5'-6"	9'-5"	9'-2"	9'-10"	9'-8"
	6'-0"	9'-2"	8'-11"	9'-7"	9'-4"
	6'-8"	8'-9"	8'-8"	9'-3"	9'-1"
	7'-0"	8'-6"	8'-5"	8'-11"	8'-11"
± 115.0	3'-8"	10'-9"	10'-6"	11'-4"	11'-1"
	4'-0"	10'-4"	10'-1"	10'-10"	10'-7"
	4'-6"	9'-11"	9'-8"	10'-5"	10'-2"
	5'-0"	9'-7"	9'-4"	10'-0"	9'-10"
	5'-8"	9'-3"	9'-0"	9'-9"	9'-6"
	6'-0"	8'-11"	8'-9"	9'-5"	9'-3"
	6'-8"	8'-7"	8'-6"	9'-0"	9'-0"
	7'-0"	8'-3"	8'-2"	8'-8"	8'-8"
± 120.0	3'-6"	10'-7"	10'-4"	11'-2"	10'-11"
	4'-0"	10'-2"	9'-11"	10'-8"	10'-5"
	4'-6"	9'-9"	9'-6"	10'-3"	10'-0"
	5'-0"	9'-5"	9'-2"	9'-11"	9'-8"
	5'-6"	9'-2"	8'-11"	9'-7"	9'-4"
	6'-0"	8'-9"	8'-8"	9'-2"	9'-1"
	6'-6"	8'-5"	8'-4"	8'-10"	8'-10"
	7'-0"	8'-1"	8'-0"	8'-6"	8'-6"
± 125.0	3'-6"	10'-6"	10'-3"	11'-0"	10'-9"
	4'-0"	10'-0"	9'-9"	10'-6"	10'-3"
	4'-6"	9'-8"	9'-5"	10'-1"	9'-11"
	5'-0"	9'-4"	9'-1"	9'-9"	9'-6"
	5'-6"	9'-0"	8'-9"	9'-5"	9'-3"
	6'-0"	8'-7"	8'-6"	9'-0"	9'-0"
	6'-6"	8'-3"	8'-2"	8'-8"	8'-8"
	7'-0"	7'-11"	7'-10"	8'-2"	8'-2"

MAXIMUM INTERIOR VERTICAL MULLION AND JAMB MULLION SPAN "L"(FT) SCHEDULE FOR A GIVEN DESIGN PRESSURE RATING "W" (psf) & A GIVEN MULLION EFFECTIVE SPACING "b" (CONTINUED)

MAXIMUM DESIGN PRESSURE RATING	MAX. EFFECTIVE SPACING	MAXIMUM 1/8" THICK MULLION SPAN "L"(FT)		MAXIMUM 3/16" THICK MULLION SPAN "L"(FT)	
		Laminated Glass	Insulated Glass	Laminated Glass	Insulated Glass
		CASE 1	CASE 2	CASE 3	CASE 4
"W" (psf)	"b" (ft-in)	M-1/J1	M-2/J-2	M-1A/J-1A	M-2A/J-2A
± 130.0	3'-6"	10'-4"	10'-1"	10'-10"	10'-7"
	4'-0"	9'-11"	9'-8"	10'-5"	10'-2"
	4'-8"	9'-6"	9'-3"	10'-0"	9'-9"
	5'-0"	9'-2"	8'-11"	9'-8"	9'-5"
	5'-6"	8'-9"	8'-8"	9'-3"	9'-1"
	6'-0"	8'-5"	8'-4"	8'-10"	8'-10"
	6'-6"	8'-1"	8'-0"	8'-5"	8'-5"
	7'-0"	7'-9"	7'-9"	7'-10"	7'-10"
± 135.0	3'-6"	10'-3"	9'-11"	10'-9"	10'-6"
	4'-0"	9'-9"	9'-6"	10'-3"	10'-0"
	4'-6"	9'-5"	9'-2"	9'-10"	9'-8"
	5'-0"	9'-0"	8'-10"	9'-6"	9'-4"
	5'-6"	8'-7"	8'-7"	9'-0"	9'-0"
	6'-0"	8'-3"	8'-2"	8'-8"	8'-8"
	6'-6"	7'-11"	7'-10"	8'-2"	8'-2"
	7'-0"	7'-7"	7'-7"	7'-7"	7'-7"
± 140.0	3'-6"	10'-1"	9'-10"	10'-7"	10'-4"
	4'-0"	9'-8"	9'-5"	10'-0"	9'-11"
	4'-6"	9'-3"	9'-1"	9'-9"	9'-6"
	5'-0"	8'-11"	8'-9"	9'-4"	9'-2"
	5'-6"	8'-6"	8'-5"	8'-11"	8'-11"
	6'-0"	8'-1"	8'-0"	8'-6"	8'-6"
	6'-6"	7'-9"	7'-9"	7'-10"	7'-10"
	7'-0"	7'-3"	7'-3"	7'-3"	7'-3"

FLORIDA BUILDING CODE (HIGH VELOCITY HURRICANE ZONE)

©2010 TILTECO, INC

TILTECO INC.
TILLIT TESTING & ENGINEERING COMPANY
6355 N.W. 36th. St., Ste. 305, VIRGINIA GARDENS, FL. 33166
Phone : (305)871-1530 . Fax : (305)871-1531
e-mail: tilteco@aol.com
EB-0006719
WALTER A. TILLIT Jr. P.E.
FLORIDA Lic. # 44167

HIGH IMPACT GREEN WORLD FIXED GLASS WALL SERIES 12000 LARGE MISSILE LAMINATED & INSULATED GLASS

GENERAL IMPACT GLASS & WINDOWS
The Clear Solution
290 WEST 78 ROAD
HIALEAH, FL. 33014
PHONE: (305) 558-8103
FAX: (305) 558-8865
www.generalimpact.com

REV. No	DESCRIPTION	DATE	REV. No	DESCRIPTION	DATE
1	MULLION SPAN FIXED	11/29/10	3	–	–
2	–	–	4	–	–

M.C.V.
DRAWN BY

05/07/10
DATE

10-055
DRAWING No

MAXIMUM DESIGN PRESSURE RATING SCHEDULE FOR INTERIOR VERTICAL MULLION'S & JAMB MULLION'S HEAD/SILL CONNECTIONS

MAXIMUM DESIGN PRESSURE RATING W (psf) FOR 1/4" MAX. LOAD BEARING SHIM SPACE

MAXIMUM MULLION SPAN "L" (Ft-In)	EFFECTIVE SPACING "b" (Ft-In)	POURED CONCRETE SUBSTRATE – FASTENERS TYPE A (1/4"ø) n=4	n=6	n=8	n=10	n=12	POURED CONCRETE SUBSTRATE – FASTENERS TYPE B (3/8"ø) n=4	n=6	n=8	n=10	n=12
6'-0"	3'-6"	80.8	121.2	140.0	140.0	140.0	140.0	140.0	140.0	140.0	140.0
	4'-0"	70.7	106.1	140.0	140.0	140.0	140.0	140.0	140.0	140.0	140.0
	4'-6"	62.9	94.3	125.7	140.0	140.0	140.0	140.0	140.0	140.0	140.0
	5'-0"	56.6	84.8	113.1	140.0	140.0	140.0	140.0	140.0	140.0	140.0
	5'-6"	51.4	77.1	102.8	128.6	140.0	133.3	140.0	140.0	140.0	140.0
	6'-0"	47.1	70.7	94.3	117.8	140.0	122.2	140.0	140.0	140.0	140.0
	6'-6"	43.5	65.3	87.0	108.8	130.5	112.8	140.0	140.0	140.0	140.0
	7'-0"	40.4	60.6	80.8	101.0	121.2	104.7	140.0	140.0	140.0	140.0
8'-6"	3'-6"	76.1	114.1	140.0	140.0	140.0	140.0	140.0	140.0	140.0	140.0
	4'-0"	66.5	99.8	133.1	140.0	140.0	140.0	140.0	140.0	140.0	140.0
	4'-6"	59.2	88.7	118.3	140.0	140.0	140.0	140.0	140.0	140.0	140.0
	5'-0"	53.2	79.9	106.5	133.1	140.0	138.0	140.0	140.0	140.0	140.0
	5'-6"	48.4	72.6	96.8	121.0	140.0	125.4	140.0	140.0	140.0	140.0
	6'-0"	44.4	66.5	88.7	110.9	133.1	115.0	140.0	140.0	140.0	140.0
	6'-6"	41.0	61.4	81.9	102.4	122.9	108.1	140.0	140.0	140.0	140.0
	7'-0"	38.0	57.0	76.1	95.1	114.1	98.6	140.0	140.0	140.0	140.0
9'-0"	3'-6"	71.8	107.7	140.0	140.0	140.0	140.0	140.0	140.0	140.0	140.0
	4'-0"	62.9	94.3	125.7	140.0	140.0	140.0	140.0	140.0	140.0	140.0
	4'-6"	55.9	83.8	111.7	139.7	140.0	140.0	140.0	140.0	140.0	140.0
	5'-0"	50.3	75.4	100.6	125.7	140.0	130.3	140.0	140.0	140.0	140.0
	5'-6"	45.7	68.6	91.4	114.3	137.1	118.5	140.0	140.0	140.0	140.0
	6'-0"	41.9	62.9	83.8	104.8	125.7	108.6	140.0	140.0	140.0	140.0
	6'-6"	38.7	58.0	77.4	96.7	116.0	100.2	140.0	140.0	140.0	140.0
	7'-0"	35.9	53.9	71.8	89.8	107.7	93.1	139.6	140.0	140.0	140.0
9'-6"	3'-6"	68.0	102.1	136.1	140.0	140.0	140.0	140.0	140.0	140.0	140.0
	4'-0"	59.5	89.3	119.1	140.0	140.0	140.0	140.0	140.0	140.0	140.0
	4'-6"	52.9	79.4	105.9	132.3	140.0	137.2	140.0	140.0	140.0	140.0
	5'-0"	47.6	71.5	95.3	119.1	140.0	123.5	140.0	140.0	140.0	140.0
	5'-6"	43.3	65.0	86.6	108.3	129.9	112.2	140.0	140.0	140.0	140.0
	6'-0"	39.7	59.5	79.4	99.2	119.1	102.9	140.0	140.0	140.0	140.0
	6'-6"	36.6	55.0	73.3	91.6	109.9	95.0	140.0	140.0	140.0	140.0
	7'-0"	34.0	51.0	68.0	85.1	102.1	88.2	132.3	140.0	140.0	140.0
10'-0"	3'-6"	64.6	97.0	129.3	140.0	140.0	140.0	140.0	140.0	140.0	140.0
	4'-0"	56.6	84.8	113.1	140.0	140.0	140.0	140.0	140.0	140.0	140.0
	4'-6"	50.3	75.4	100.6	125.7	140.0	130.3	140.0	140.0	140.0	140.0
	5'-0"	45.3	67.9	90.5	113.1	135.8	117.3	140.0	140.0	140.0	140.0
	5'-6"	41.1	61.7	82.3	102.8	123.4	106.6	140.0	140.0	140.0	140.0
	6'-0"	37.7	56.6	75.4	94.3	113.1	97.7	140.0	140.0	140.0	140.0
	6'-6"	34.8	52.2	69.6	87.0	104.4	90.2	135.3	140.0	140.0	140.0
	7'-0"	32.3	48.5	64.6	80.8	97.0	83.8	125.7	140.0	140.0	140.0
10'-6"	3'-8"	61.6	92.4	123.1	140.0	140.0	140.0	140.0	140.0	140.0	140.0
	4'-0"	53.9	80.8	107.7	134.7	140.0	139.6	140.0	140.0	140.0	140.0
	4'-6"	47.9	71.8	95.8	119.7	140.0	124.1	140.0	140.0	140.0	140.0
	5'-0"	43.1	64.6	86.2	107.7	129.3	111.7	140.0	140.0	140.0	140.0
	5'-8"	39.2	58.8	78.4	97.9	117.5	101.5	140.0	140.0	140.0	140.0
	6'-0"	35.9	53.9	71.8	89.8	107.7	93.1	139.6	140.0	140.0	140.0
	6'-8"	33.2	49.7	66.3	82.9	99.5	85.9	128.9	140.0	140.0	140.0
	7'-0"	30.8	46.2	61.6	77.0	92.4	79.8	119.7	140.0	140.0	140.0
11'-0"	3'-6"	58.8	88.2	117.5	140.0	140.0	140.0	140.0	140.0	140.0	140.0
	4'-0"	51.4	77.1	102.8	128.6	140.0	133.3	140.0	140.0	140.0	140.0
	4'-6"	45.7	68.6	91.4	114.3	137.1	118.5	140.0	140.0	140.0	140.0
	5'-0"	41.1	61.7	82.3	102.8	123.4	106.6	140.0	140.0	140.0	140.0
	5'-6"	37.4	56.1	74.6	93.5	112.2	96.9	140.0	140.0	140.0	140.0
	6'-0"	34.3	51.4	68.6	85.7	102.8	88.9	133.3	140.0	140.0	140.0
	6'-6"	31.8	47.5	63.3	79.1	94.9	82.0	123.0	140.0	140.0	140.0
	7'-0"	29.4	44.1	58.8	73.5	88.2	76.2	114.2	140.0	140.0	140.0

MAXIMUM MULLION SPAN "L" (Ft-In)	EFFECTIVE SPACING "b" (Ft-In)	WOOD (2) 2"x THK. SUBSTRATE – FASTENERS TYPE C (1/4"ø) n=4	n=6	n=8	n=10	n=12	FASTENERS TYPE D (3/8"ø) n=4	n=6	n=8	n=10	n=12
6'-0"	3'-6"	67.0	100.5	140.0	140.0	140.0	62.9	94.3	125.7	140.0	140.0
	4'-0"	58.7	88.0	140.0	140.0	140.0	55.0	82.5	110.0	137.5	140.0
	4'-6"	52.1	78.2	125.7	130.3	140.0	48.9	73.3	97.8	122.2	140.0
	5'-0"	46.9	70.4	113.1	117.3	140.0	44.0	66.0	88.0	110.0	132.0
	5'-6"	42.7	64.0	102.8	106.6	128.0	40.0	60.0	80.0	100.0	120.0
	6'-0"	39.1	58.7	94.3	97.8	117.3	36.7	55.0	73.3	91.7	110.0
	6'-6"	36.1	54.1	87.0	90.2	108.3	33.9	50.8	67.7	84.6	101.6
	7'-0"	33.5	50.3	80.8	83.8	100.5	31.4	47.2	62.9	78.6	94.3
8'-6"	3'-6"	63.1	94.6	140.0	140.0	140.0	59.2	88.8	118.3	140.0	140.0
	4'-0"	55.2	82.8	133.1	138.0	140.0	51.8	77.7	103.6	129.4	140.0
	4'-6"	49.1	73.6	118.3	122.7	140.0	46.0	69.0	92.0	115.1	138.1
	5'-0"	44.2	66.2	106.5	110.4	132.5	41.4	62.1	82.8	103.6	124.3
	5'-6"	40.1	60.2	96.8	100.4	120.4	37.7	56.5	75.3	94.1	113.0
	6'-0"	36.8	55.2	88.7	92.0	110.4	34.5	51.8	69.0	86.3	103.6
	6'-6"	34.0	51.0	81.9	84.9	101.9	31.9	47.8	63.7	79.7	95.6
	7'-0"	31.5	47.3	76.1	78.9	94.6	29.6	44.4	59.2	74.0	88.8
9'-0"	3'-6"	59.6	89.4	140.0	140.0	140.0	55.9	83.8	111.8	139.7	140.0
	4'-0"	52.1	78.2	125.7	130.3	140.0	46.9	73.3	97.8	122.2	140.0
	4'-6"	46.3	69.5	111.7	115.9	139.0	43.5	65.2	86.9	108.7	130.4
	5'-0"	41.7	62.6	100.6	104.3	125.1	39.1	58.7	78.2	97.8	117.4
	5'-6"	37.9	56.9	91.4	94.8	113.7	35.6	53.3	71.1	88.9	106.7
	6'-0"	34.8	52.1	83.8	86.9	104.3	32.6	48.9	65.2	81.5	97.8
	6'-6"	32.1	48.1	77.4	80.2	96.2	30.1	45.1	60.2	75.2	90.3
	7'-0"	29.8	44.7	71.8	74.5	89.4	27.9	41.9	55.9	69.9	83.8
9'-6"	3'-6"	56.4	84.7	136.1	140.0	140.0	52.9	79.4	105.9	132.4	140.0
	4'-0"	49.4	74.1	119.1	123.5	140.0	46.3	69.5	92.7	115.8	139.0
	4'-6"	43.9	65.9	105.9	109.8	131.7	41.2	61.8	82.4	102.9	123.5
	5'-0"	39.5	59.3	95.3	98.8	116.5	37.1	55.6	74.1	92.7	111.2
	5'-6"	35.9	53.9	86.6	89.8	107.8	33.7	50.5	67.4	84.2	101.1
	6'-0"	32.9	49.4	79.4	82.3	98.8	30.9	46.3	61.8	77.2	92.7
	6'-6"	30.4	45.6	73.3	76.0	91.2	28.5	42.8	57.0	71.3	85.5
	7'-0"	28.2	42.3	68.0	70.6	84.7	26.5	39.7	52.9	66.2	79.4
10'-0"	3'-6"	53.6	80.4	129.3	134.1	140.0	50.3	75.4	100.6	125.7	140.0
	4'-0"	46.9	70.4	113.1	117.3	140.0	44.0	66.0	88.0	110.0	132.0
	4'-6"	41.7	62.6	100.6	104.3	125.1	39.1	58.7	78.2	97.8	117.4
	5'-0"	37.5	56.3	90.5	93.8	112.6	35.2	52.8	70.4	88.0	105.6
	5'-6"	34.1	51.2	82.3	85.3	102.4	32.0	48.0	64.0	80.0	96.0
	6'-0"	31.3	46.9	75.4	78.2	93.8	29.3	44.0	58.7	73.3	88.0
	6'-6"	28.9	43.3	69.6	72.2	86.6	27.1	40.6	54.2	67.7	81.2
	7'-0"	26.8	40.2	64.6	67.0	80.4	25.1	37.7	50.3	62.9	75.4
10'-6"	3'-8"	51.1	76.6	123.1	127.7	140.0	47.9	71.9	95.8	119.8	140.0
	4'-0"	44.7	67.0	107.7	111.7	134.1	41.9	62.9	83.8	104.8	125.7
	4'-6"	39.7	59.8	95.8	99.3	119.2	37.3	55.9	74.5	93.1	111.8
	5'-0"	35.7	53.6	86.2	89.4	107.2	33.5	50.3	67.1	83.8	100.6
	5'-8"	32.6	48.7	76.4	81.2	97.5	30.5	45.7	61.0	76.2	91.4
	6'-0"	29.8	44.7	71.8	74.5	89.4	27.9	41.9	55.9	69.9	83.8
	6'-8"	27.5	41.2	66.3	68.7	82.5	25.8	38.7	51.6	64.5	77.4
	7'-0"	25.5	38.3	61.6	63.8	76.6	24.0	35.9	47.9	59.9	71.9
11'-0"	3'-6"	48.7	73.1	117.5	121.9	140.0	45.7	68.6	91.4	114.3	137.2
	4'-0"	42.7	64.0	102.8	106.6	128.0	40.0	60.0	80.0	100.0	120.0
	4'-6"	37.9	56.9	91.4	94.8	113.7	35.6	53.3	71.1	88.9	106.7
	5'-0"	34.1	51.2	82.3	85.3	102.4	32.0	48.0	64.0	80.0	98.0
	5'-6"	31.0	46.5	74.8	77.6	93.1	29.1	43.6	58.2	72.7	87.3
	6'-0"	28.4	42.7	68.6	71.1	85.3	26.7	40.0	53.3	66.7	80.0
	6'-6"	26.2	39.4	63.3	65.6	78.7	24.6	36.9	49.2	61.6	73.9
	7'-0"	24.4	36.6	58.8	60.9	73.1	22.9	34.3	45.7	57.2	68.6

MAXIMUM MULLION SPAN "L" (Ft-In)	EFFECTIVE SPACING "b" (Ft-In)	STEEL 1/4" Min. THK. SUBSTRATE – FASTENERS TYPE E (3/8"ø) n=4	n=6	n=8	n=10	n=12
6'-0"	3'-6"	140.0	140.0	140.0	140.0	140.0
	4'-0"	140.0	140.0	140.0	140.0	140.0
	4'-6"	140.0	140.0	140.0	140.0	140.0
	5'-0"	140.0	140.0	140.0	140.0	140.0
	5'-6"	140.0	140.0	140.0	140.0	140.0
	6'-0"	140.0	140.0	140.0	140.0	140.0
	6'-6"	140.0	140.0	140.0	140.0	140.0
	7'-0"	140.0	140.0	140.0	140.0	140.0
8'-6"	3'-6"	140.0	140.0	140.0	140.0	140.0
	4'-0"	140.0	140.0	140.0	140.0	140.0
	4'-6"	140.0	140.0	140.0	140.0	140.0
	5'-0"	140.0	140.0	140.0	140.0	140.0
	5'-6"	140.0	140.0	140.0	140.0	140.0
	6'-0"	140.0	140.0	140.0	140.0	140.0
	6'-6"	140.0	140.0	140.0	140.0	140.0
	7'-0"	140.0	140.0	140.0	140.0	140.0
9'-0"	3'-6"	140.0	140.0	140.0	140.0	140.0
	4'-0"	140.0	140.0	140.0	140.0	140.0
	4'-6"	140.0	140.0	140.0	140.0	140.0
	5'-0"	140.0	140.0	140.0	140.0	140.0
	5'-6"	140.0	140.0	140.0	140.0	140.0
	6'-0"	140.0	140.0	140.0	140.0	140.0
	6'-6"	135.0	140.0	140.0	140.0	140.0
	7'-0"	124.6	140.0	140.0	140.0	140.0
9'-6"	3'-6"	140.0	140.0	140.0	140.0	140.0
	4'-0"	140.0	140.0	140.0	140.0	140.0
	4'-6"	140.0	140.0	140.0	140.0	140.0
	5'-0"	140.0	140.0	140.0	140.0	140.0
	5'-6"	140.0	140.0	140.0	140.0	140.0
	6'-0"	139.5	140.0	140.0	140.0	140.0
	6'-6"	127.9	140.0	140.0	140.0	140.0
	7'-0"	118.0	140.0	140.0	140.0	140.0
10'-0"	3'-6"	140.0	140.0	140.0	140.0	140.0
	4'-0"	140.0	140.0	140.0	140.0	140.0
	4'-6"	140.0	140.0	140.0	140.0	140.0
	5'-0"	140.0	140.0	140.0	140.0	140.0
	5'-6"	140.0	140.0	140.0	140.0	140.0
	6'-0"	132.5	140.0	140.0	140.0	140.0
	6'-6"	121.5	140.0	140.0	140.0	140.0
	7'-0"	112.1	140.0	140.0	140.0	140.0
10'-6"	3'-8"	140.0	140.0	140.0	140.0	140.0
	4'-0"	140.0	140.0	140.0	140.0	140.0
	4'-6"	140.0	140.0	140.0	140.0	140.0
	5'-0"	140.0	140.0	140.0	140.0	140.0
	5'-8"	138.6	140.0	140.0	140.0	140.0
	6'-0"	126.2	140.0	140.0	140.0	140.0
	6'-8"	115.7	140.0	140.0	140.0	140.0
	7'-0"	106.8	140.0	140.0	140.0	140.0
11'-0"	3'-6"	140.0	140.0	140.0	140.0	140.0
	4'-0"	140.0	140.0	140.0	140.0	140.0
	4'-6"	140.0	140.0	140.0	140.0	140.0
	5'-0"	140.0	140.0	140.0	140.0	140.0
	5'-6"	140.0	140.0	140.0	140.0	140.0
	6'-0"	132.5	140.0	140.0	140.0	140.0
	6'-6"	120.5	140.0	140.0	140.0	140.0
	7'-0"	109.6	140.0	140.0	140.0	140.0

Ⓑ FASTENERS TYPES & SUBSTRATES REQUIREMENTS:

A - 1/4"Ø ELCO CONSTRUCTION PRODUCTS, ULTRACON ANCHOR W/ 1 3/4" Min. EMBEDMENT INTO POURED CONCRETE (Min. f'c = 2,730 ksi), W/ S = 4" MIN. SPACING & 2 1/2" MIN. EDGE DISTANCE. FOR MAXIMUM SPACING, EMBEDMENT & EDGE DISTANCE ARE BEYOND ANY FINISH MATERIAL.

B - 3/8"Ø POWERS FASTENERS, WEDGE-BOLT ANCHOR W/ 2" Min. EMBEDMENT INTO POURED CONCRETE (Min. f'c = 3.0 ksi), W/ S = 3" MIN. SPACING & 3 1/4" MIN. EDGE DISTANCE. FOR MAXIMUM SPACING, EMBEDMENT & EDGE DISTANCE ARE BEYOND ANY FINISH MATERIAL.

C - 1/4"Ø ELCO CONSTRUCTION PRODUCTS, ULTRACON ANCHOR TO (2) 2" x WOOD BUCKS (G=0.55) W/ 3" Min. PENETRATION INTO WOOD, W/ S = 2" Min. SPACING & 1" MIN. EDGE DISTANCE. FOR MAXIMUM SPACING, EMBEDMENT & EDGE DISTANCE ARE BEYOND ANY FINISH MATERIAL.

D - 3/8"Ø LAG SCREW TO (2) 2" x WOOD BUCKS (G=0.55) W/ 3" Min. PENETRATION INTO WOOD, W/ S = 2" Min. SPACING & 1 1/2" MIN. EDGE DISTANCE. FOR MAXIMUM SPACING, EMBEDMENT & EDGE DISTANCE ARE BEYOND ANY FINISH MATERIAL.

E - 3/8"Ø TYPE "F" BOLT TO 1/4" Min. THK. ASTM A-36 STEEL W/ S = 2" MIN. SPACING & 1" MIN. EDGE DISTANCE OR 3/8"Ø SAE GRADE 5 GALVANIZED STEEL HHB THRU BOLT W/ NUT & LOCK WASHER.

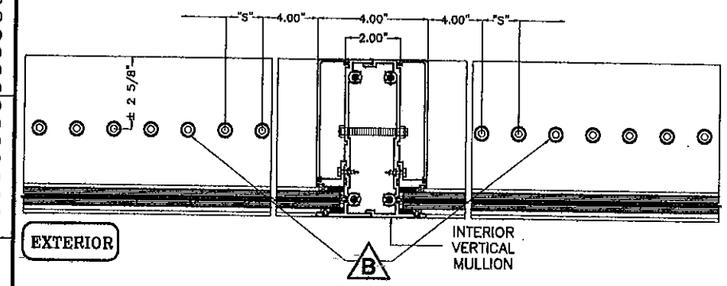

"n" FASTENERS
n = TOTAL NUMBER OF FASTENERS PER CONNECTION AT HEAD/SILL, EQUALLY INSTALLED AT EACH SIDE OF INTERIOR VERTICAL MULLION

SILL OR HEAD CONNECTION DETAIL @ INTERIOR VERTICAL MULLION

(PLAN VIEW)
N.T.S.

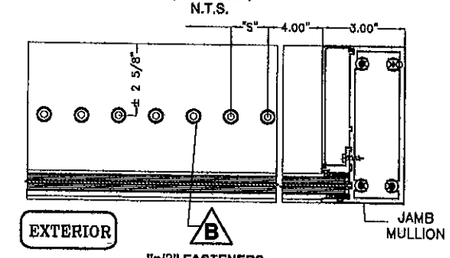

"n/2" FASTENERS
n/2 = TOTAL NUMBER OF FASTENERS PER CONNECTION AT HEAD/SILL, INSTALLED AT ONE SIDE OF JAMB MULLION

SILL OR HEAD CONNECTION DETAIL @ JAMB MULLION

(PLAN VIEW)
N.T.S.

Approved as complying with the Florida Building Code
Date JAN. 13, 2011
NOA# 10-0923.04
Miami Dade Product Control Division
By Manuel Perez

MIAMI-DADE COUNTY

WALTER A. TILLIT JR.
LICENSE
No. 44167
STATE OF FLORIDA
PROFESSIONAL ENGINEER

P.E. SEAL/SIGNATURE/DATE

FLORIDA BUILDING CODE (HIGH VELOCITY HURRICANE ZONE)

©2010 TILTECO, INC

TILTECO INC.
TILLIT TESTING & ENGINEERING COMPANY
8395 N.W. 36th. St., Ste. 305, VIRGINIA GARDENS, Fl. 33166
Phone : (305)871-1530 . Fax : (305)871-1531
e-mail: tilteco@aol.com
EB-0006719
WALTER A. TILLIT Jr. P.E.
FLORIDA Lic. # 44187

HIGH IMPACT GREEN WORLD FIXED GLASS WALL SERIES 12000 LARGE MISSILE LAMINATED & INSULATED GLASS

GENERAL IMPACT GLASS & WINDOWS
The Clear Solution
290 WEST 78 ROAD
HIALEAH, FL. 33014
PHONE: (305) 558-8103
FAX: (305) 558-6665
www.generalimpact.com

REV. No	DESCRIPTION	DATE	REV. No	DESCRIPTION	DATE
1	–	–	3	–	–
2	–	–	4	–	–

M.C.V.
DRAWN BY

05/07/10
DATE

10-055
DRAWING No

MAXIMUM DESIGN PRESSURE RATING SCHEDULE FOR INTERIOR VERTICAL MULLION'S & JAMB MULLION'S HEAD/SILL CONNECTIONS

MAXIMUM DESIGN PRESSURE RATING W (psf) FOR 1/4" MAX. LOAD BEARING SHIM SPACE (CONTINUED)

MAXIMUM MULLION SPAN "L" (Ft-In)	EFFECTIVE SPACING "b" (Ft-In)	POURED CONCRETE SUBSTRATE – FASTENERS TYPE A (1/4"ø) n=4	n=6	n=8	n=10	n=12	POURED CONCRETE SUBSTRATE – FASTENERS TYPE B (3/8"ø) n=4	n=6	n=8	n=10	n=12
11 '- 6 "	3 '- 6 "	56.2	84.3	112.4	140.0	140.0	140.0	140.0	140.0	140.0	140.0
	4 '- 0 "	49.2	73.8	98.4	123.0	140.0	127.5	140.0	140.0	140.0	140.0
	4 '- 6 "	43.7	65.6	87.4	109.3	131.2	113.3	140.0	140.0	140.0	140.0
	5 '- 0 "	39.3	59.0	78.7	98.4	118.0	102.0	140.0	140.0	140.0	140.0
	5 '- 6 "	35.8	53.7	71.5	89.4	107.3	92.7	139.1	140.0	140.0	140.0
	6 '- 0 "	32.8	49.2	65.6	82.0	98.4	85.0	127.5	140.0	140.0	140.0
	6 '- 6 "	30.3	45.4	60.5	75.7	90.8	78.5	117.7	140.0	140.0	140.0
	7 '- 0 "	28.1	42.2	56.2	70.3	84.3	72.8	109.3	140.0	140.0	140.0
12 '- 0 "	3 '- 6 "	53.9	80.8	107.7	134.7	140.0	139.6	140.0	140.0	140.0	140.0
	4 '- 0 "	47.1	70.7	94.3	117.8	140.0	122.2	140.0	140.0	140.0	140.0
	4 '- 6 "	41.9	62.9	83.8	104.8	125.7	108.8	140.0	140.0	140.0	140.0
	5 '- 0 "	37.7	56.6	75.4	94.3	113.1	97.7	140.0	140.0	140.0	140.0
	5 '- 6 "	34.3	51.4	68.6	85.7	102.8	88.9	133.3	140.0	140.0	140.0
	6 '- 0 "	31.4	47.1	62.9	78.6	94.3	81.4	122.2	140.0	140.0	140.0
	6 '- 6 "	29.0	43.5	58.0	72.5	87.0	75.2	112.8	140.0	140.0	140.0
	7 '- 0 "	26.9	40.4	53.9	67.3	80.8	69.8	104.7	139.6	140.0	140.0
12 '- 8 "	3 '- 6 "	51.7	77.6	103.4	129.3	140.0	134.0	140.0	140.0	140.0	140.0
	4 '- 0 "	45.3	67.9	90.5	113.1	135.8	117.3	140.0	140.0	140.0	140.0
	4 '- 6 "	40.2	60.3	80.4	100.6	120.7	104.3	140.0	140.0	140.0	140.0
	5 '- 0 "	36.2	54.3	72.4	90.5	108.6	93.6	140.0	140.0	140.0	140.0
	5 '- 6 "	32.9	49.4	65.8	82.3	98.7	85.3	127.9	140.0	140.0	140.0
	6 '- 0 "	30.2	45.3	60.3	75.4	90.5	78.2	117.3	140.0	140.0	140.0
	6 '- 6 "	27.8	41.8	55.7	69.6	83.5	72.2	108.3	140.0	140.0	140.0
	7 '- 0 "	25.9	38.8	51.7	64.6	77.6	67.0	100.5	134.0	140.0	140.0
13 '- 0 "	3 '- 6 "	49.7	74.6	99.5	124.3	140.0	128.9	140.0	140.0	140.0	140.0
	4 '- 0 "	43.5	65.3	87.0	108.8	130.5	112.8	140.0	140.0	140.0	140.0
	4 '- 6 "	38.7	58.0	77.4	96.7	116.0	100.2	140.0	140.0	140.0	140.0
	5 '- 0 "	34.8	52.2	69.6	87.0	104.4	90.2	135.3	140.0	140.0	140.0
	5 '- 6 "	31.6	47.5	63.3	79.1	94.9	82.0	123.0	140.0	140.0	140.0
	6 '- 0 "	29.0	43.5	58.0	72.5	87.0	75.2	112.8	140.0	140.0	140.0
	6 '- 6 "	26.8	40.2	53.6	66.9	80.3	69.4	104.1	138.8	140.0	140.0
	7 '- 0 "	24.9	37.3	49.7	62.2	74.6	64.4	96.7	128.9	140.0	140.0
13 '- 8 "	3 '- 6 "	47.9	71.8	95.8	119.7	140.0	124.1	140.0	140.0	140.0	140.0
	4 '- 0 "	41.9	62.9	83.8	104.8	125.7	108.6	140.0	140.0	140.0	140.0
	4 '- 6 "	37.2	55.9	74.5	93.1	111.7	96.5	140.0	140.0	140.0	140.0
	5 '- 0 "	33.5	50.3	67.0	83.8	100.6	86.9	130.3	140.0	140.0	140.0
	5 '- 6 "	30.5	45.7	60.9	76.2	91.4	79.0	118.5	140.0	140.0	140.0
	6 '- 0 "	27.9	41.9	55.9	69.8	83.8	72.4	108.8	140.0	140.0	140.0
	6 '- 6 "	25.8	38.7	51.6	64.5	77.4	66.8	100.2	133.7	140.0	140.0
	7 '- 0 "	23.9	35.9	47.9	59.9	71.8	62.1	93.1	124.1	140.0	140.0
14 '- 0 "	3 '- 6 "	46.2	69.3	92.4	115.4	138.6	119.7	140.0	140.0	140.0	140.0
	4 '- 0 "	40.4	60.6	80.8	101.0	121.2	104.7	140.0	140.0	140.0	140.0
	4 '- 6 "	35.9	53.9	71.8	89.8	107.7	93.1	139.6	140.0	140.0	140.0
	5 '- 0 "	32.3	48.5	64.6	80.8	97.0	83.8	125.7	140.0	140.0	140.0
	5 '- 6 "	29.4	44.1	58.8	73.5	88.2	76.2	114.2	140.0	140.0	140.0
	6 '- 0 "	26.9	40.4	53.9	67.3	80.8	69.8	104.7	139.6	140.0	140.0
	6 '- 6 "	24.9	37.3	49.7	62.2	74.6	64.4	96.7	128.9	140.0	140.0
	7 '- 0 "	23.1	34.6	46.2	57.7	69.3	59.8	89.8	119.7	140.0	140.0
14 '- 6 "	3 '- 6 "	44.6	66.9	89.2	111.5	133.8	115.6	140.0	140.0	140.0	140.0
	4 '- 0 "	39.0	58.5	78.0	97.5	117.0	101.1	140.0	140.0	140.0	140.0
	4 '- 6 "	34.7	52.0	69.4	86.7	104.0	89.9	134.8	140.0	140.0	140.0
	5 '- 0 "	31.2	46.8	62.4	78.0	93.6	80.9	121.3	140.0	140.0	140.0
	5 '- 6 "	28.4	42.6	56.7	70.9	85.1	73.5	110.3	140.0	140.0	140.0
	6 '- 0 "	26.0	39.0	52.0	65.0	78.0	67.4	101.1	134.8	140.0	140.0
	6 '- 6 "	24.0	36.0	48.0	60.0	72.0	62.2	93.3	124.4	140.0	140.0
	7 '- 0 "	22.3	33.4	44.6	55.7	66.9	57.8	86.7	115.6	140.0	140.0

MAXIMUM MULLION SPAN "L" (Ft-In)	EFFECTIVE SPACING "b" (Ft-In)	WOOD (2) 2" x THK. SUBSTRATE – FASTENERS TYPE C (1/4"ø) n=4	n=6	n=8	n=10	n=12	FASTENERS TYPE D (3/8"ø) n=4	n=6	n=8	n=10	n=12	STEEL 1/4" Min. THK. – FASTENERS TYPE E (3/8"ø) n=4	n=6	n=8	n=10	n=12
11 '- 6 "	3 '- 6 "	46.6	69.9	112.4	116.6	139.9	43.7	65.6	87.5	109.3	131.2	140.0	140.0	140.0	140.0	140.0
	4 '- 0 "	40.8	61.2	98.4	102.0	122.4	38.3	57.4	76.5	95.7	114.8	140.0	140.0	140.0	140.0	140.0
	4 '- 6 "	36.3	54.4	87.4	90.7	108.8	34.0	51.0	68.0	85.0	102.1	140.0	140.0	140.0	140.0	140.0
	5 '- 0 "	32.6	49.0	78.7	81.6	97.9	30.6	45.9	61.2	76.5	91.8	126.6	140.0	140.0	140.0	140.0
	5 '- 6 "	29.7	44.5	71.5	74.2	89.0	27.8	41.7	55.7	69.6	83.5	115.2	140.0	140.0	140.0	140.0
	6 '- 0 "	27.2	40.6	65.6	68.0	81.6	25.5	38.3	51.0	63.8	76.5	105.6	140.0	140.0	140.0	140.0
	6 '- 6 "	25.1	37.7	60.5	62.8	75.3	23.6	35.3	47.1	58.9	70.7	97.5	140.0	140.0	140.0	140.0
	7 '- 0 "	23.3	35.0	56.2	58.3	69.9	21.9	32.8	43.7	54.7	65.6	90.5	135.8	140.0	140.0	140.0
12 '- 0 "	3 '- 6 "	44.7	67.0	107.7	111.7	134.1	41.9	62.9	83.8	104.8	125.7	140.0	140.0	140.0	140.0	140.0
	4 '- 0 "	39.1	58.7	94.3	97.8	117.3	36.7	55.0	73.3	91.7	110.0	140.0	140.0	140.0	140.0	140.0
	4 '- 6 "	34.8	52.1	83.8	86.9	104.3	32.6	48.9	65.2	81.6	97.8	135.0	140.0	140.0	140.0	140.0
	5 '- 0 "	31.3	46.9	75.4	78.2	93.8	29.3	44.0	58.7	73.3	88.0	121.5	140.0	140.0	140.0	140.0
	5 '- 6 "	28.4	42.7	68.6	71.1	85.3	26.7	40.0	53.3	66.7	80.0	110.4	140.0	140.0	140.0	140.0
	6 '- 0 "	26.1	39.1	62.9	65.2	78.2	24.4	36.7	48.9	61.1	73.3	101.2	140.0	140.0	140.0	140.0
	6 '- 6 "	24.1	36.1	58.0	60.2	72.2	22.6	33.9	45.1	56.4	67.7	93.4	140.0	140.0	140.0	140.0
	7 '- 0 "	22.3	33.5	53.9	55.9	67.0	21.0	31.4	41.9	52.4	62.9	86.8	130.2	140.0	140.0	140.0
12 '- 8 "	3 '- 6 "	42.9	64.3	103.4	107.2	128.7	40.2	60.4	80.5	100.6	120.7	140.0	140.0	140.0	140.0	140.0
	4 '- 0 "	37.5	56.3	90.5	93.8	112.6	36.2	52.8	70.4	88.0	105.6	140.0	140.0	140.0	140.0	140.0
	4 '- 6 "	33.4	50.0	80.4	83.4	100.1	31.3	46.9	62.6	78.2	93.9	129.8	140.0	140.0	140.0	140.0
	5 '- 0 "	30.0	45.0	72.4	75.1	90.1	28.2	42.2	56.3	70.4	84.5	118.6	140.0	140.0	140.0	140.0
	5 '- 6 "	27.3	40.9	65.8	68.2	81.9	25.6	38.4	51.2	64.0	76.8	108.0	140.0	140.0	140.0	140.0
	6 '- 0 "	25.0	37.5	60.3	62.6	75.1	23.5	35.2	46.9	58.7	70.4	97.2	140.0	140.0	140.0	140.0
	6 '- 6 "	23.1	34.6	55.7	57.7	69.3	21.7	32.5	43.3	54.2	65.0	89.7	134.6	140.0	140.0	140.0
	7 '- 0 "	21.4	32.2	51.7	53.6	64.3	20.1	30.2	40.2	50.3	60.4	83.3	124.9	140.0	140.0	140.0
13 '- 0 "	3 '- 6 "	41.2	61.9	99.5	103.1	123.7	38.7	58.0	77.4	96.7	116.1	140.0	140.0	140.0	140.0	140.0
	4 '- 0 "	36.1	54.1	87.0	90.2	108.3	33.9	50.8	67.7	84.6	101.6	140.0	140.0	140.0	140.0	140.0
	4 '- 6 "	32.1	48.1	77.4	80.2	96.2	30.1	45.1	60.2	76.2	90.3	124.6	140.0	140.0	140.0	140.0
	5 '- 0 "	28.9	43.3	69.6	72.2	86.6	27.1	40.8	54.2	67.7	81.2	112.1	140.0	140.0	140.0	140.0
	5 '- 6 "	26.2	39.4	63.3	65.6	78.7	24.6	38.9	49.2	61.6	73.9	101.9	140.0	140.0	140.0	140.0
	6 '- 0 "	24.1	36.1	58.0	60.2	72.2	22.6	33.9	45.1	56.4	67.7	93.4	140.0	140.0	140.0	140.0
	6 '- 6 "	22.2	33.3	53.6	55.5	66.6	20.8	31.2	41.7	52.1	62.5	86.3	129.4	140.0	140.0	140.0
	7 '- 0 "	20.6	30.9	49.7	51.6	61.9	19.3	29.0	38.7	48.4	58.0	80.1	120.1	140.0	140.0	140.0
13 '- 8 "	3 '- 6 "	39.7	59.6	95.8	99.3	119.2	37.3	55.9	74.5	93.1	111.8	140.0	140.0	140.0	140.0	140.0
	4 '- 0 "	34.8	52.1	83.6	86.9	104.3	32.6	48.9	65.2	81.5	97.8	135.0	140.0	140.0	140.0	140.0
	4 '- 6 "	30.9	46.3	74.5	77.2	92.7	29.0	43.5	58.0	72.4	86.9	120.0	140.0	140.0	140.0	140.0
	5 '- 0 "	27.8	41.7	67.0	69.5	83.4	26.1	39.1	52.2	65.2	78.2	108.0	140.0	140.0	140.0	140.0
	5 '- 6 "	25.3	37.9	60.9	63.2	76.8	23.7	35.6	47.4	59.3	71.1	98.2	140.0	140.0	140.0	140.0
	6 '- 0 "	23.2	34.8	55.9	57.9	69.5	21.7	32.6	43.5	54.3	65.2	90.0	135.0	140.0	140.0	140.0
	6 '- 6 "	21.4	32.1	51.6	53.5	64.2	20.1	30.1	40.1	50.2	60.2	83.1	124.6	140.0	140.0	140.0
	7 '- 0 "	19.9	29.8	47.9	49.7	59.6	18.6	27.9	37.3	46.6	55.9	77.1	115.7	140.0	140.0	140.0
14 '- 0 "	3 '- 6 "	38.3	57.5	92.4	95.8	114.9	35.9	53.9	71.9	89.8	107.8	140.0	140.0	140.0	140.0	140.0
	4 '- 0 "	33.5	50.3	80.8	83.8	100.5	31.4	47.2	62.9	78.8	94.3	130.2	140.0	140.0	140.0	140.0
	4 '- 6 "	29.8	44.7	71.8	74.5	89.4	27.9	41.9	56.9	69.9	83.8	115.7	140.0	140.0	140.0	140.0
	5 '- 0 "	26.8	40.2	64.6	67.0	80.4	25.1	37.7	50.3	62.9	75.4	104.1	140.0	140.0	140.0	140.0
	5 '- 6 "	24.4	36.6	58.8	60.9	73.1	22.9	34.3	45.7	57.2	68.8	94.7	140.0	140.0	140.0	140.0
	6 '- 0 "	22.3	33.5	53.9	55.9	67.0	21.0	31.4	41.9	52.4	62.9	86.8	130.2	140.0	140.0	140.0
	6 '- 6 "	20.8	30.9	49.7	51.8	61.9	19.3	29.0	38.7	48.4	58.0	80.1	120.1	140.0	140.0	140.0
	7 '- 0 "	19.2	28.7	46.2	47.9	57.5	18.0	26.9	35.9	44.9	53.9	74.4	111.6	140.0	140.0	140.0
14 '- 6 "	3 '- 6 "	37.0	55.5	89.2	92.5	110.9	34.7	52.0	69.4	86.7	104.1	140.0	140.0	140.0	140.0	140.0
	4 '- 0 "	32.4	48.5	78.0	80.9	97.1	30.4	45.5	60.7	75.9	91.1	125.7	140.0	140.0	140.0	140.0
	4 '- 6 "	28.8	43.1	69.4	71.9	86.3	27.0	40.5	54.0	67.4	80.9	111.7	140.0	140.0	140.0	140.0
	5 '- 0 "	25.9	38.8	62.4	64.7	77.7	24.3	36.4	48.6	60.7	72.8	100.5	140.0	140.0	140.0	140.0
	5 '- 6 "	23.5	35.3	56.7	58.8	70.6	22.1	33.1	44.1	55.2	66.2	91.4	137.1	140.0	140.0	140.0
	6 '- 0 "	21.6	32.4	52.0	53.9	64.7	20.2	30.4	40.5	50.8	60.7	83.8	125.7	140.0	140.0	140.0
	6 '- 6 "	19.9	29.9	48.0	49.8	59.7	18.7	28.0	37.4	46.7	56.0	77.3	116.0	140.0	140.0	140.0
	7 '- 0 "	18.5	27.7	44.6	46.2	55.5	17.3	26.0	34.7	43.4	52.0	71.8	107.7	140.0	140.0	140.0

FASTENERS TYPES & SUBSTRATES REQUIREMENTS:

A - 1/4"Ø ELCO CONSTRUCTION PRODUCTS, ULTRACON ANCHOR W/ 1 3/4" Min. EMBEDMENT INTO POURED CONCRETE (Min. f'c = 2.730 ksi), W/ S = 4" MIN. SPACING & 2 1/2" MIN. EDGE DISTANCE. FOR MAXIMUM SPACING, EMBEDMENT & EDGE DISTANCE ARE BEYOND ANY FINISH MATERIAL.

B - 3/8"Ø POWERS FASTENERS, WEDGE-BOLT ANCHOR W/ 2" Min. EMBEDMENT INTO POURED CONCRETE (Min. f'c = 3.0 ksi), W/ S = 3" MIN. SPACING & 3 1/4" MIN. EDGE DISTANCE. FOR MAXIMUM SPACING, EMBEDMENT & EDGE DISTANCE ARE BEYOND ANY FINISH MATERIAL.

C - 1/4"Ø ELCO CONSTRUCTION PRODUCTS, ULTRACON ANCHOR TO (2) 2" x WOOD BUCKS (G=0.55) W/ 3" Min. PENETRATION INTO WOOD, W/ S = 2" Min. SPACING & 1" MIN. EDGE DISTANCE. FOR MAXIMUM SPACING, EMBEDMENT & EDGE DISTANCE ARE BEYOND ANY FINISH MATERIAL.

D - 3/8"Ø LAG SCREW TO (2) 2" x WOOD BUCKS (G=0.55) W/ 3" Min. PENETRATION INTO WOOD, W/ S = 2" Min. SPACING & 1 1/2" MIN. EDGE DISTANCE. FOR MAXIMUM SPACING, EMBEDMENT & EDGE DISTANCE ARE BEYOND ANY FINISH MATERIAL.

E - 3/8"Ø TYPE "F" BOLT TO 1/4" Min. THK. ASTM A-36 STEEL W/ S = 2" MIN. SPACING & 1" MIN. EDGE DISTANCE OR 3/8"Ø SAE GRADE 5 GALVANIZED STEEL HHB THRU BOLT W/ NUT & LOCK WASHER.

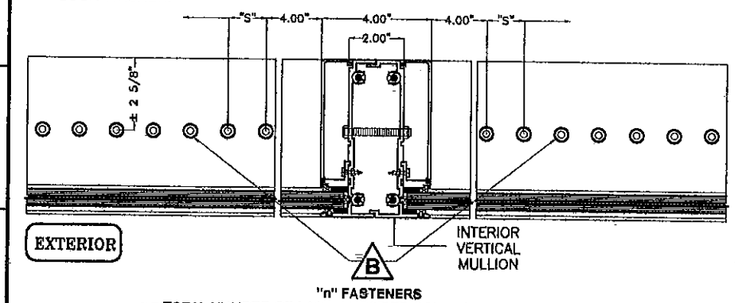

"n" FASTENERS
n = TOTAL NUMBER OF FASTENERS PER CONNECTION AT HEAD/SILL, EQUALLY INSTALLED AT EACH SIDE OF INTERIOR VERTICAL MULLION

SILL OR HEAD CONNECTION DETAIL @ INTERIOR VERTICAL MULLION
(PLAN VIEW)
N.T.S.

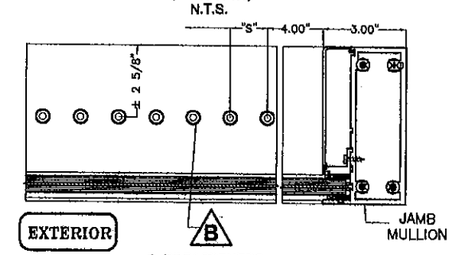

"n/2" FASTENERS
n/2 = TOTAL NUMBER OF FASTENERS PER CONNECTION AT HEAD/SILL, INSTALLED AT ONE SIDE OF JAMB MULLION

SILL OR HEAD CONNECTION DETAIL @ JAMB MULLION
(PLAN VIEW)
N.T.S.

Approved as complying with the Florida Building Code
Date JAN. 13, 2011
NOA# 10-0923.04
Miami Dade Product Control Division
By Manuel Perez

MIAMI–DADE COUNTY

WALTER A. TILLIT JR. LICENSE No. 44167 STATE OF FLORIDA PROFESSIONAL ENGINEER

P.E. SEAL/SIGNATURE/DATE

FLORIDA BUILDING CODE (HIGH VELOCITY HURRICANE ZONE)

©2010 TILTECO, INC

TILTECO INC.
TILLIT TESTING & ENGINEERING COMPANY
6358 N.W. 36th. St., Ste. 305, VIRGINIA GARDENS, FL. 33166
Phone : (305)871-1530 Fax : (305)871-1531
e-mail: tilteco@aol.com
EB-0008719
WALTER A. TILLIT Jr. P.E.
FLORIDA Lic. # 44167

HIGH IMPACT GREEN WORLD FIXED GLASS WALL SERIES 12000 LARGE MISSILE LAMINATED & INSULATED GLASS

GENERAL IMPACT GLASS & WINDOWS
The Clear Solution
290 WEST 78 ROAD
HIALEAH, FL. 33014
PHONE: (305) 558-8103
FAX: (305) 558-6565
www.generalimpact.com

REV. No	DESCRIPTION	DATE	REV. No	DESCRIPTION	DATE
1	–	–	3	–	–
2	–	–	4	–	–

M.C.V.
DRAWN BY

05/07/10
DATE

10-055
DRAWING No

MAXIMUM DESIGN PRESSURE RATING SCHEDULE FOR INTERIOR VERTICAL MULLION'S & JAMB MULLION'S HEAD/SILL CONNECTIONS

MAXIMUM MULLION SPAN	EFFECTIVE SPACING	MAXIMUM DESIGN PRESSURE RATING W (psf) FOR 1/4" MAX. LOAD BEARING SHIM SPACE (CONTINUED)																										
		POURED CONCRETE SUBSTRATE										WOOD (2) 2" x THK. SUBSTRATE										STEEL 1/4" Min. THK.						
		FASTENERS TYPE A (1/4"ø)					FASTENERS TYPE B (3/8"ø)					FASTENERS TYPE C (1/4"ø)					FASTENERS TYPE D (3/8"ø)					FASTENERS TYPE E (3/8"ø)						
"L" (Ft-In)	"b" (Ft-In)	n = 4	n = 6	n = 8	n = 10	n = 12	n = 4	n = 6	n = 8	n = 10	n = 12	n = 4	n = 6	n = 8	n = 10	n = 12	n = 4	n = 6	n = 8	n = 10	n = 12	n = 4	n = 6	n = 8	n = 10	n = 12		
15 '- 0 "	3 '- 6 "	35.0	52.5	70.0	87.5	105.0	111.7	140.0	140.0	140.0	140.0	35.7	53.6	70.0	89.4	107.2	33.5	50.3	67.1	83.8	100.6	138.8	140.0	140.0	140.0	140.0		
	4 '- 0 "	30.6	46.0	61.3	76.6	91.9	97.7	140.0	140.0	140.0	140.0	31.3	46.9	61.3	78.2	93.8	29.3	44.0	58.7	73.3	88.0	121.5	140.0	140.0	140.0	140.0		
	4 '- 6 "	27.2	40.8	54.5	68.1	81.7	86.9	130.3	140.0	140.0	140.0	27.8	41.7	54.5	69.5	83.4	26.1	39.1	52.2	65.2	78.2	108.0	140.0	140.0	140.0	140.0		
	5 '- 0 "	24.5	36.8	49.0	61.3	73.5	78.2	117.3	140.0	140.0	140.0	25.0	37.5	49.0	62.6	75.1	23.5	35.2	46.9	58.7	70.4	97.2	140.0	140.0	140.0	140.0		
	5 '- 6 "	22.3	33.4	44.6	55.7	66.8	71.1	106.6	140.0	140.0	140.0	22.7	34.1	44.6	56.9	68.2	21.3	32.0	42.7	53.3	64.0	88.3	132.5	140.0	140.0	140.0		
	6 '- 0 "	20.4	30.6	40.8	51.1	61.3	65.2	97.7	130.3	140.0	140.0	20.9	31.3	40.8	52.1	62.6	19.6	29.3	39.1	48.9	58.7	81.0	121.5	140.0	140.0	140.0		
	6 '- 6 "	18.9	28.3	37.7	47.1	56.6	60.1	90.2	120.3	140.0	140.0	19.2	28.9	37.7	48.1	57.7	18.1	27.1	36.1	45.1	54.2	74.8	112.1	140.0	140.0	140.0		
	7 '- 0 "	17.5	26.3	35.0	43.8	52.5	55.9	83.8	111.7	139.6	140.0	17.9	26.8	35.0	44.7	53.6	16.8	25.1	33.5	41.9	50.3	69.4	104.1	138.8	140.0	140.0		
15 '- 6 "	3 '- 6 "	33.9	50.8	67.8	84.7	101.6	108.1	140.0	140.0	140.0	140.0	34.6	51.9	67.8	86.5	103.8	32.4	48.7	64.9	81.1	97.3	134.4	140.0	140.0	140.0	140.0		
	4 '- 0 "	29.6	44.5	59.3	74.1	88.9	94.8	140.0	140.0	140.0	140.0	30.3	45.4	59.3	75.7	90.8	28.4	42.6	56.8	71.0	85.2	117.6	140.0	140.0	140.0	140.0		
	4 '- 6 "	26.4	39.5	52.7	65.9	79.1	84.1	126.1	140.0	140.0	140.0	26.9	40.4	52.7	67.3	80.7	25.2	37.9	50.5	63.1	75.7	104.5	140.0	140.0	140.0	140.0		
	5 '- 0 "	23.7	35.6	47.4	59.3	71.1	75.7	113.5	140.0	140.0	140.0	24.2	36.3	47.4	60.5	72.7	22.7	34.1	45.4	56.8	68.1	94.0	140.0	140.0	140.0	140.0		
	5 '- 6 "	21.6	32.3	43.1	53.9	64.7	68.8	103.2	137.6	140.0	140.0	22.0	33.0	43.1	55.0	66.0	20.6	31.0	41.3	51.6	61.9	85.5	128.2	140.0	140.0	140.0		
	6 '- 0 "	19.8	29.6	39.5	49.4	59.3	63.1	94.6	126.1	140.0	140.0	20.2	30.3	39.5	50.5	60.5	18.9	28.4	37.9	47.3	56.8	78.4	117.6	140.0	140.0	140.0		
	6 '- 6 "	18.2	27.4	36.5	45.6	54.7	58.2	87.3	116.4	140.0	140.0	18.6	27.9	36.5	46.6	55.9	17.5	26.2	34.9	43.7	52.4	72.3	108.5	140.0	140.0	140.0		
	7 '- 0 "	16.9	25.4	33.9	42.4	50.8	54.0	81.1	108.1	135.1	140.0	17.3	25.9	33.9	43.2	51.9	16.2	24.3	32.4	40.6	48.7	67.2	100.8	134.4	140.0	140.0		
15 '- 9 "	3 '- 6 "	33.3	50.0	66.7	83.4	100.0	108.4	140.0	140.0	140.0	140.0	34.0	51.1	66.7	85.1	102.1	31.9	47.9	63.9	79.8	95.8	132.2	140.0	140.0	140.0	140.0		
	4 '- 0 "	29.2	43.8	58.3	72.9	87.5	93.1	139.6	140.0	140.0	140.0	29.8	44.7	58.3	74.5	89.4	27.9	41.9	55.9	69.9	83.8	115.7	140.0	140.0	140.0	140.0		
	4 '- 6 "	25.9	38.9	51.9	64.8	77.8	82.7	124.1	140.0	140.0	140.0	26.5	39.7	51.9	66.2	79.4	24.8	37.3	49.7	62.1	74.5	102.8	140.0	140.0	140.0	140.0		
	5 '- 0 "	23.3	35.0	46.7	58.3	70.0	74.5	111.7	140.0	140.0	140.0	23.8	35.7	46.7	59.6	71.5	22.4	33.6	44.7	55.9	67.1	92.8	138.6	140.0	140.0	140.0		
	5 '- 6 "	21.2	31.8	42.4	53.0	63.7	67.7	101.5	135.4	140.0	140.0	21.7	32.5	42.4	54.2	65.0	20.3	30.5	40.6	50.8	61.0	84.1	128.2	140.0	140.0	140.0		
	6 '- 0 "	19.4	29.2	38.9	48.6	58.3	62.1	93.1	124.1	140.0	140.0	19.9	29.8	38.9	49.7	59.6	18.6	27.9	37.3	46.6	55.9	77.1	115.7	140.0	140.0	140.0		
	6 '- 6 "	18.0	26.9	35.9	44.9	53.9	57.3	85.9	114.6	140.0	140.0	18.3	27.5	35.9	45.6	55.0	17.2	25.8	34.4	43.0	51.6	71.2	106.8	140.0	140.0	140.0		
	7 '- 0 "	16.7	25.0	33.3	41.7	50.0	53.2	79.6	106.4	133.0	140.0	17.0	25.5	33.3	42.6	51.1	16.0	24.0	31.9	39.9	47.9	66.1	99.2	132.2	140.0	140.0		

FASTENERS TYPES & SUBSTRATES REQUIREMENTS:

A - 1/4"Ø ELCO CONSTRUCTION PRODUCTS, ULTRACON ANCHOR W/ 1 3/4" Min. EMBEDMENT INTO POURED CONCRETE (Min. f'c = 2.730 ksi), W/ S = 4" MIN. SPACING & 2 1/2" MIN. EDGE DISTANCE. FOR MAXIMUM SPACING, EMBEDMENT & EDGE DISTANCE ARE BEYOND ANY FINISH MATERIAL.

B - 3/8"Ø POWERS FASTENERS, WEDGE-BOLT ANCHOR W/ 2" Min. EMBEDMENT INTO POURED CONCRETE (Min. f'c = 3.0 ksi), W/ S = 3" MIN. SPACING & 3 1/4" MIN. EDGE DISTANCE. FOR MAXIMUM SPACING, EMBEDMENT & EDGE DISTANCE ARE BEYOND ANY FINISH MATERIAL.

C - 1/4"Ø ELCO CONSTRUCTION PRODUCTS, ULTRACON ANCHOR TO (2) 2" x WOOD BUCKS (G=0.55) W/ 3" Min. PENETRATION INTO WOOD, W/ S = 2" Min. SPACING & 1" MIN. EDGE DISTANCE. FOR MAXIMUM SPACING, EMBEDMENT & EDGE DISTANCE ARE BEYOND ANY FINISH MATERIAL.

D - 3/8"Ø LAG SCREW TO (2) 2" x WOOD BUCKS (G=0.55) W/ 3" Min. PENETRATION INTO WOOD, W/ S = 2" Min. SPACING & 1 1/2" MIN. EDGE DISTANCE. FOR MAXIMUM SPACING, EMBEDMENT & EDGE DISTANCE ARE BEYOND ANY FINISH MATERIAL.

E - 3/8"Ø TYPE "F" BOLT TO 1/4" Min. THK. ASTM A-36 STEEL W/ S = 2" MIN. SPACING & 1" MIN. EDGE DISTANCE OR 3/8"Ø SAE GRADE 5 GALVANIZED STEEL HHB THRU BOLT W/ NUT & LOCK WASHER.

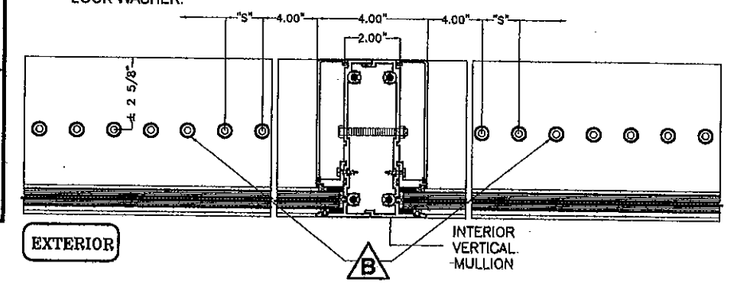

"n" FASTENERS
n = TOTAL NUMBER OF FASTENERS PER CONNECTION AT HEAD/SILL, EQUALLY INSTALLED AT EACH SIDE OF INTERIOR VERTICAL MULLION

SILL OR HEAD CONNECTION DETAIL @ INTERIOR VERTICAL MULLION

(PLAN VIEW)
N.T.S.

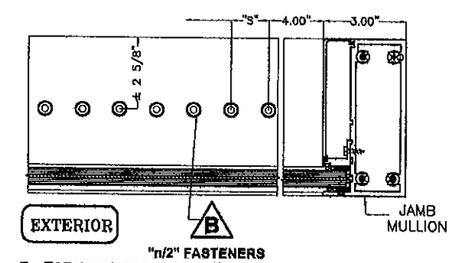

"n/2" FASTENERS
n/2 = TOTAL NUMBER OF FASTENERS PER CONNECTION AT HEAD/SILL, INSTALLED AT ONE SIDE OF JAMB MULLION

SILL OR HEAD CONNECTION DETAIL @ JAMB MULLION

(PLAN VIEW)
N.T.S.

Approved as complying with the Florida Building Code
Date JAN. 13, 2011
NOA# 10-0923.04
Miami Dade Product Control Division
By Manuel Perez

MIAMI–DADE COUNTY

WALTER A. TILLIT JR. LICENSE No. 44167 STATE OF FLORIDA PROFESSIONAL ENGINEER

P.E. SEAL/SIGNATURE/DATE

FLORIDA BUILDING CODE (HIGH VELOCITY HURRICANE ZONE)

©2010 TILTECO, INC

TILTECO INC.
TILLIT TESTING & ENGINEERING COMPANY
8355 N.W. 36th. St., Ste. 305, VIRGINIA GARDENS, Fl. 33166
Phone : (305)871-1630 . Fax : (305)871-1531
e-mail: tilteco@aol.com
EB-0006719
WALTER A. TILLIT Jr. P.E.
FLORIDA Lic. # 44167

HIGH IMPACT GREEN WORLD FIXED GLASS WALL SERIES 12000 LARGE MISSILE LAMINATED & INSULATED GLASS

GENERAL IMPACT GLASS & WINDOWS
The Clear Solution
290 WEST 78 ROAD
HIALEAH, FL. 33014
PHONE: (305) 558-8103
FAX: (305) 558-6665
www.generalimpact.com

REV. No	DESCRIPTION	DATE	REV. No	DESCRIPTION	DATE
1	–	–	3	–	–
2	–	–	4	–	–

M.C.V.
DRAWN BY

05/07/10
DATE

10-055
DRAWING No

MAXIMUM DESIGN PRESSURE RATING SCHEDULE FOR INTERIOR VERTICAL MULLION'S & JAMB MULLION'S HEAD/SILL CONNECTIONS

MAXIMUM MULLION SPAN "L" (Ft-in)	EFFECTIVE SPACING "b" (Ft-in)	MAXIMUM DESIGN PRESSURE RATING W (psf) FOR 3/8" MAX. LOAD BEARING SHIM SPACE																										
		POURED CONCRETE SUBSTRATE										WOOD (2) 2" x THK. SUBSTRATE										STEEL 1/4" Min. THK. SUBSTRATE				
		FASTENERS TYPE A (1/4"ø)					FASTENERS TYPE B (3/8"ø)					FASTENERS TYPE C (1/4"ø)					FASTENERS TYPE D (3/8"ø)					FASTENERS TYPE E (3/8"ø)				
		n = 4	n = 6	n = 8	n = 10	n = 12	n = 4	n = 6	n = 8	n = 10	n = 12	n = 4	n = 6	n = 8	n = 10	n = 12	n = 4	n = 6	n = 8	n = 10	n = 12	n = 4	n = 6	n = 8	n = 10	n = 12
8 '- 0 " OR LESS	3 '- 6 "	58.7	88.0	117.4	140.0	140.0	140.0	140.0	140.0	140.0	140.0	58.7	88.0	117.4	140.0	140.0	62.9	94.3	125.7	140.0	140.0	140.0	140.0	140.0	140.0	140.0
	4 '- 0 "	51.4	77.0	102.7	128.4	140.0	140.0	140.0	140.0	140.0	140.0	51.4	77.0	102.7	128.4	140.0	55.0	82.5	110.0	137.5	140.0	140.0	140.0	140.0	140.0	140.0
	4 '- 6 "	45.7	68.5	91.3	114.1	137.0	135.1	140.0	140.0	140.0	140.0	45.7	68.5	91.3	114.1	137.0	48.9	73.3	97.8	122.2	140.0	140.0	140.0	140.0	140.0	140.0
	5 '- 0 "	41.1	61.6	82.2	102.7	123.3	121.6	140.0	140.0	140.0	140.0	41.1	61.6	82.2	102.7	123.3	44.0	66.0	88.0	110.0	132.0	138.6	140.0	140.0	140.0	140.0
	5 '- 6 "	37.4	56.0	74.7	93.4	112.1	110.5	140.0	140.0	140.0	140.0	37.4	56.0	74.7	93.4	112.1	40.0	60.0	80.0	100.0	120.0	125.9	140.0	140.0	140.0	140.0
	6 0	34.2	51.4	68.5	85.6	102.7	101.3	140.0	140.0	140.0	140.0	34.2	51.4	68.5	85.6	102.7	36.7	55.0	73.3	91.7	110.0	115.4	140.0	140.0	140.0	140.0
	6 '- 6 "	31.6	47.4	63.2	79.0	94.8	93.5	140.0	140.0	140.0	140.0	31.6	47.4	63.2	79.0	94.8	33.9	50.8	67.7	84.6	101.6	106.5	140.0	140.0	140.0	140.0
	7 '- 0 "	29.3	44.0	58.7	73.4	88.0	86.8	130.3	140.0	140.0	140.0	29.3	44.0	58.7	73.4	88.0	31.4	47.2	62.9	78.6	94.3	98.9	140.0	140.0	140.0	140.0
8 '- 6 "	3 '- 6 "	55.2	82.9	110.5	138.1	140.0	140.0	140.0	140.0	140.0	140.0	55.2	82.9	110.5	138.1	140.0	59.2	88.8	118.3	140.0	140.0	140.0	140.0	140.0	140.0	140.0
	4 '- 0 "	48.3	72.5	96.7	120.8	140.0	140.0	140.0	140.0	140.0	140.0	48.3	72.5	96.7	120.8	140.0	51.8	77.7	103.6	129.4	140.0	140.0	140.0	140.0	140.0	140.0
	4 '- 6 "	43.0	64.5	85.9	107.4	128.9	127.1	140.0	140.0	140.0	140.0	43.0	64.5	85.9	107.4	128.9	46.0	69.0	92.0	115.1	138.1	140.0	140.0	140.0	140.0	140.0
	5 '- 0 "	38.7	58.0	77.3	96.7	116.0	114.4	140.0	140.0	140.0	140.0	38.7	58.0	77.3	96.7	116.0	41.4	62.1	82.8	103.6	124.3	130.3	140.0	140.0	140.0	140.0
	5 '- 6 "	35.2	52.7	70.3	87.9	105.5	104.0	140.0	140.0	140.0	140.0	35.2	52.7	70.3	87.9	105.5	37.7	56.5	75.3	94.1	113.0	118.5	140.0	140.0	140.0	140.0
	6 0	32.2	48.3	64.5	80.6	96.7	95.4	140.0	140.0	140.0	140.0	32.2	48.3	64.5	80.6	96.7	34.5	51.8	69.0	86.3	103.6	108.6	140.0	140.0	140.0	140.0
	6 6	29.7	44.6	59.5	74.4	89.2	88.0	132.0	140.0	140.0	140.0	29.7	44.6	59.5	74.4	89.2	31.9	47.8	63.7	79.7	95.6	100.3	140.0	140.0	140.0	140.0
	7 '- 0 "	27.6	41.4	55.2	69.1	82.9	81.7	122.6	140.0	140.0	140.0	27.6	41.4	55.2	69.1	82.9	29.6	44.4	59.2	74.0	88.8	93.1	139.7	140.0	140.0	140.0
9 '- 0 "	3 '- 6 "	52.2	78.3	104.4	130.4	140.0	140.0	140.0	140.0	140.0	140.0	52.2	78.3	104.4	130.4	140.0	55.9	83.8	111.8	139.7	140.0	140.0	140.0	140.0	140.0	140.0
	4 '- 0 "	45.7	68.5	91.3	114.1	137.0	135.1	140.0	140.0	140.0	140.0	45.7	68.5	91.3	114.1	137.0	48.9	73.3	97.8	122.2	140.0	140.0	140.0	140.0	140.0	140.0
	4 '- 6 "	40.6	60.9	81.2	101.5	121.7	120.1	140.0	140.0	140.0	140.0	40.6	60.9	81.2	101.5	121.7	43.5	65.2	86.9	108.7	130.4	136.6	140.0	140.0	140.0	140.0
	5 '- 0 "	36.5	54.8	73.0	91.3	109.6	108.1	140.0	140.0	140.0	140.0	36.5	54.8	73.0	91.3	109.6	39.1	58.7	78.2	97.8	117.4	123.1	140.0	140.0	140.0	140.0
	5 '- 6 "	33.2	49.8	66.4	83.0	99.6	98.3	140.0	140.0	140.0	140.0	33.2	49.8	66.4	83.0	99.6	35.6	53.3	71.1	88.9	106.7	111.9	140.0	140.0	140.0	140.0
	6 '- 0 "	30.4	45.7	60.9	76.1	91.3	90.1	135.1	140.0	140.0	140.0	30.4	45.7	60.9	76.1	91.3	32.6	48.9	65.2	81.5	97.8	102.6	140.0	140.0	140.0	140.0
	6 6	28.1	42.1	56.2	70.2	84.3	83.1	124.7	140.0	140.0	140.0	28.1	42.1	56.2	70.2	84.3	30.1	45.1	60.2	75.2	90.3	94.7	140.0	140.0	140.0	140.0
	7 '- 0 "	26.1	39.1	52.2	65.2	78.3	77.2	115.8	140.0	140.0	140.0	26.1	39.1	52.2	65.2	78.3	27.9	41.9	55.9	69.9	83.8	87.9	131.9	140.0	140.0	140.0
9 '- 6 "	3 '- 6 "	49.4	74.1	98.9	123.6	140.0	140.0	140.0	140.0	140.0	140.0	49.4	74.1	98.9	123.6	140.0	52.9	79.4	105.9	132.4	140.0	140.0	140.0	140.0	140.0	140.0
	4 '- 0 "	43.3	64.9	86.5	108.1	129.8	128.0	140.0	140.0	140.0	140.0	43.3	64.9	86.5	108.1	129.8	46.3	69.5	92.7	115.8	139.0	140.0	140.0	140.0	140.0	140.0
	4 '- 6 "	38.4	57.7	76.9	96.1	115.3	113.8	140.0	140.0	140.0	140.0	38.4	57.7	76.9	96.1	115.3	41.2	61.8	82.4	102.9	123.5	129.6	140.0	140.0	140.0	140.0
	5 '- 0 "	34.6	51.9	69.2	86.5	103.8	102.4	140.0	140.0	140.0	140.0	34.6	51.9	69.2	86.5	103.8	37.1	55.6	74.1	92.7	111.2	116.6	140.0	140.0	140.0	140.0
	5 '- 6 "	31.5	47.2	62.9	78.6	94.4	93.1	139.6	140.0	140.0	140.0	31.5	47.2	62.9	78.6	94.4	33.7	50.5	67.4	84.2	101.1	106.0	140.0	140.0	140.0	140.0
	6 0	28.8	43.3	57.7	72.1	86.5	85.3	128.0	140.0	140.0	140.0	28.8	43.3	57.7	72.1	86.5	30.9	46.3	61.8	77.2	92.7	97.2	140.0	140.0	140.0	140.0
	6 '- 6 "	26.6	39.9	53.2	66.5	79.8	78.8	118.1	140.0	140.0	140.0	26.6	39.9	53.2	66.5	79.8	28.5	42.8	57.0	71.3	85.5	89.7	134.6	140.0	140.0	140.0
	7 '- 0 "	24.7	37.1	49.4	61.8	74.1	73.1	109.7	140.0	140.0	140.0	24.7	37.1	49.4	61.8	74.1	26.5	39.7	52.9	66.2	79.4	83.3	125.0	140.0	140.0	140.0
10 '- 0 "	3 '- 6 "	47.0	70.4	93.9	117.4	140.0	139.0	140.0	140.0	140.0	140.0	47.0	70.4	93.9	117.4	140.0	50.3	75.4	100.6	125.7	140.0	140.0	140.0	140.0	140.0	140.0
	4 '- 0 "	41.1	61.6	82.2	102.7	123.3	121.6	140.0	140.0	140.0	140.0	41.1	61.6	82.2	102.7	123.3	44.0	66.0	88.0	110.0	132.0	138.5	140.0	140.0	140.0	140.0
	4 '- 6 "	36.5	54.8	73.0	91.3	109.6	108.1	140.0	140.0	140.0	140.0	36.5	54.8	73.0	91.3	109.6	39.1	58.7	78.2	97.8	117.4	123.1	140.0	140.0	140.0	140.0
	5 '- 0 "	32.9	49.3	65.7	82.2	98.6	97.3	140.0	140.0	140.0	140.0	32.9	49.3	65.7	82.2	98.6	35.2	52.8	70.4	88.0	105.6	110.8	140.0	140.0	140.0	140.0
	5 '- 6 "	29.9	44.8	59.8	74.7	89.6	88.4	132.6	140.0	140.0	140.0	29.9	44.8	59.8	74.7	89.6	32.0	48.0	64.0	80.0	96.0	100.7	140.0	140.0	140.0	140.0
	6 '- 0 "	27.4	41.1	54.8	68.5	82.2	81.1	121.6	140.0	140.0	140.0	27.4	41.1	54.8	68.5	82.2	29.3	44.0	58.7	73.3	88.0	92.3	138.5	140.0	140.0	140.0
	6 6	25.3	37.9	50.6	63.2	75.9	74.8	112.2	140.0	140.0	140.0	25.3	37.9	50.6	63.2	75.9	27.1	40.6	54.2	67.7	81.2	85.2	127.8	140.0	140.0	140.0
	7 '- 0 "	23.5	35.2	47.0	58.7	70.4	69.5	104.2	139.0	140.0	140.0	23.5	35.2	47.0	58.7	70.4	25.1	37.7	50.3	62.9	75.4	79.1	118.7	140.0	140.0	140.0
10 '- 6 "	3 '- 6 "	44.7	67.1	89.4	111.8	134.2	132.3	140.0	140.0	140.0	140.0	44.7	67.1	89.4	111.8	134.2	47.9	71.9	95.8	119.8	140.0	140.0	140.0	140.0	140.0	140.0
	4 '- 0 "	39.1	58.7	78.3	97.8	117.4	115.8	140.0	140.0	140.0	140.0	39.1	58.7	78.3	97.8	117.4	41.9	62.9	83.8	104.8	125.7	131.9	140.0	140.0	140.0	140.0
	4 '- 6 "	34.8	52.2	69.6	87.0	104.4	102.9	140.0	140.0	140.0	140.0	34.8	52.2	69.6	87.0	104.4	37.3	55.9	74.5	93.1	111.8	117.2	140.0	140.0	140.0	140.0
	5 '- 0 "	31.3	47.0	62.6	78.3	93.9	92.6	139.0	140.0	140.0	140.0	31.3	47.0	62.6	78.3	93.9	33.5	50.3	67.1	83.8	100.6	105.5	140.0	140.0	140.0	140.0
	5 '- 6 "	28.5	42.7	56.9	71.1	85.4	84.2	128.3	140.0	140.0	140.0	28.5	42.7	56.9	71.1	85.4	30.5	45.7	61.0	76.2	91.4	95.9	140.0	140.0	140.0	140.0
	6 '- 0 "	26.1	39.1	52.2	65.2	78.3	77.2	115.8	140.0	140.0	140.0	26.1	39.1	52.2	65.2	78.3	27.9	41.9	55.9	69.9	83.8	87.9	131.9	140.0	140.0	140.0
	6 '- 6 "	24.1	36.1	48.2	60.2	72.2	71.3	106.9	140.0	140.0	140.0	24.1	36.1	48.2	60.2	72.2	25.8	38.7	51.6	64.5	77.4	81.2	121.7	140.0	140.0	140.0
	7 '- 0 "	22.4	33.5	44.7	55.9	67.1	66.2	99.3	132.3	140.0	140.0	22.4	33.5	44.7	55.9	67.1	24.0	36.0	47.9	59.9	71.9	75.4	113.1	140.0	140.0	140.0
11 '- 0 "	3 '- 6 "	42.7	64.0	85.4	106.7	128.1	126.3	140.0	140.0	140.0	140.0	42.7	64.0	85.4	106.7	128.1	45.7	68.6	91.4	114.3	137.2	140.0	140.0	140.0	140.0	140.0
	4 '- 0 "	37.4	56.0	74.7	93.4	112.1	110.6	140.0	140.0	140.0	140.0	37.4	56.0	74.7	93.4	112.1	40.0	60.0	80.0	100.0	120.0	125.9	140.0	140.0	140.0	140.0
	4 '- 6 "	33.2	49.8	66.4	83.0	99.6	98.3	140.0	140.0	140.0	140.0	33.2	49.8	66.4	83.0	99.8	35.6	53.3	71.1	88.9	106.7	111.9	140.0	140.0	140.0	140.0
	5 '- 0 "	29.9	44.8	59.8	74.7	89.6	88.4	132.6	140.0	140.0	140.0	29.9	44.8	59.8	74.7	89.6	32.0	48.0	64.0	80.0	96.0	100.7	140.0	140.0	140.0	140.0
	5 '- 6 "	27.2	40.7	54.3	67.9	81.5	80.4	120.6	140.0	140.0	140.0	27.2	40.7	54.3	67.9	81.5	29.1	43.6	58.2	72.7	87.3	91.6	137.3	140.0	140.0	140.0
	6 '- 0 "	24.9	37.4	49.8	62.3	74.7	73.7	110.5	140.0	140.0	140.0	24.9	37.4	49.8	62.3	74.7	26.7	40.0	53.3	66.7	80.0	83.9	125.9	140.0	140.0	140.0
	6 '- 6 "	22.0	33.0	44.0	55.0	66.0	65.1	97.6	130.1	140.0	140.0	22.0	33.0	44.0	55.0	66.0	23.8	36.3	47.1	58.9	70.7	74.1	111.2	140.0	140.0	140.0
	7 '- 0 "	20.4	30.6	40.8	51.0	61.2	60.4	90.6	120.8	140.0	140.0	20.4	30.6	40.8	51.0	61.2	21.9	32.8	43.7	54.7	65.6	68.8	103.2	137.6	140.0	140.0

FASTENERS TYPES & SUBSTRATES REQUIREMENTS:

A - 1/4"Ø ELCO CONSTRUCTION PRODUCTS, ULTRACON ANCHOR W/ 1 3/4" Min. EMBEDMENT INTO POURED CONCRETE (Min. fc = 2,730 ksi), W/ S = 4" MIN. SPACING & 2 1/2" MIN. EDGE DISTANCE. FOR MAXIMUM SPACING, EMBEDMENT & EDGE DISTANCE ARE BEYOND ANY FINISH MATERIAL.

B - 3/8"Ø POWERS FASTENERS, WEDGE-BOLT ANCHOR W/ 2" Min. EMBEDMENT INTO POURED CONCRETE (Min. fc = 3.0 ksi), W/ S = 3" MIN. SPACING & 3 1/4" MIN. EDGE DISTANCE. FOR MAXIMUM SPACING, EMBEDMENT & EDGE DISTANCE ARE BEYOND ANY FINISH MATERIAL.

C - 1/4"Ø ELCO CONSTRUCTION PRODUCTS, ULTRACON ANCHOR TO (2) 2" x WOOD BUCKS (G=0.55) W/ 3" Min. PENETRATION INTO WOOD, W/ S = 2" Min. SPACING & 1" MIN. EDGE DISTANCE. FOR MAXIMUM SPACING, EMBEDMENT & EDGE DISTANCE ARE BEYOND ANY FINISH MATERIAL.

D - 3/8"Ø LAG SCREW TO (2) 2" x WOOD BUCKS (G=0.55) W/ 3" Min. PENETRATION INTO WOOD, W/ S = 2" Min. SPACING & 1 1/2" MIN. EDGE DISTANCE. FOR MAXIMUM SPACING, EMBEDMENT & EDGE DISTANCE ARE BEYOND ANY FINISH MATERIAL.

E - 3/8"Ø TYPE "F" BOLT TO 1/4" Min. THK. ASTM A-36 STEEL W/ S = 2" MIN. SPACING & 1" MIN. EDGE DISTANCE OR 3/8"Ø SAE GRADE 5 GALVANIZED STEEL HHB THRU BOLT W/ NUT & LOCK WASHER.

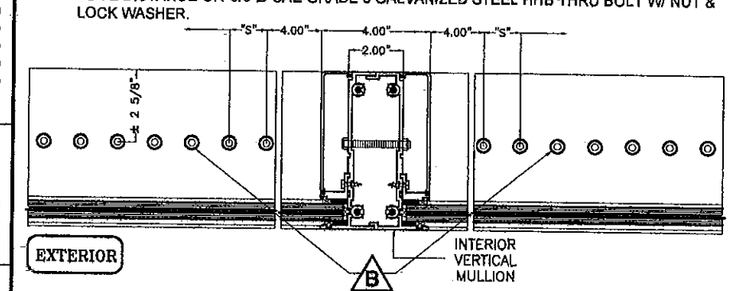

"n"-FASTENERS
n = TOTAL NUMBER OF FASTENERS PER CONNECTION AT HEAD/SILL, EQUALLY INSTALLED AT EACH SIDE OF INTERIOR VERTICAL MULLION

SILL OR HEAD CONNECTION DETAIL @ INTERIOR VERTICAL MULLION

(PLAN VIEW)
N.T.S.

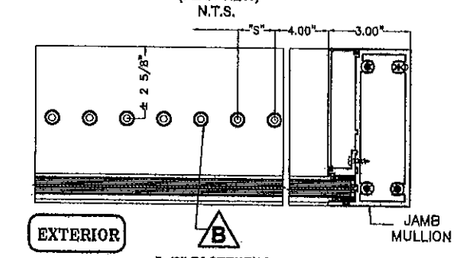

"n/2" FASTENERS
n/2 = TOTAL NUMBER OF FASTENERS PER CONNECTION AT HEAD/SILL, INSTALLED AT ONE SIDE OF JAMB MULLION

SILL OR HEAD CONNECTION DETAIL @ JAMB MULLION

(PLAN VIEW)
N.T.S.

Approved as complying with the Florida Building Code
Date JAN. 13, 2011
NOA# 10-0923.04
Miami Dade Product Control Division
By Manuel Perez

MIAMI-DADE COUNTY

WALTER A. TILLIT JR. LICENSE No. 44167 STATE OF FLORIDA PROFESSIONAL ENGINEER

P.E. SEAL/SIGNATURE/DATE

FLORIDA BUILDING CODE (HIGH VELOCITY HURRICANE ZONE)

©2010 TILTECO, INC

TILTECO INC.
TILLIT TESTING & ENGINEERING COMPANY
8355 N.W. 36th. St., Ste. 305, VIRGINIA GARDENS, FL 33166
Phone : (305)871-1530 . Fax : (305)871-1531
e-mail: tilteco@aol.com
EB-0006719
WALTER A. TILLIT Jr. P.E.
FLORIOA Lic. # 44167

HIGH IMPACT GREEN WORLD FIXED GLASS WALL SERIES 12000 LARGE MISSILE LAMINATED & INSULATED GLASS

GENERAL IMPACT GLASS & WINDOWS
The Clear Solution
290 WEST 78 ROAD
HIALEAH, FL. 33014
PHONE: (305) 558-8103
FAX: (305) 558-6665
www.generalimpact.com

REV. No	DESCRIPTION	DATE	REV. No	DESCRIPTION	DATE
1	–	–	3	–	–
2	–	–	4	–	–

M.C.V.
DRAWN BY

05/07/10
DATE

10-055
DRAWING No

MAXIMUM DESIGN PRESSURE RATING SCHEDULE FOR INTERIOR VERTICAL MULLION'S & JAMB MULLION'S HEAD/SILL CONNECTIONS

MAXIMUM MULLION SPAN	EFFECTIVE SPACING	MAXIMUM DESIGN PRESSURE RATING W (psf) FOR 3/8" MAX. LOAD BEARING SHIM SPACE (CONTINUED)																								
		POURED CONCRETE SUBSTRATE										WOOD (2) 2" x THK. SUBSTRATE										STEEL 1/4" Min. THK.				
		FASTENERS TYPE A (1/4"ø)					FASTENERS TYPE B (3/8"ø)					FASTENERS TYPE C (1/4"ø)					FASTENERS TYPE D (3/8"ø)					FASTENERS TYPE E (3/8"ø)				
"L" (Ft-In)	"b" (Ft-In)	n = 4	n = 6	n = 8	n = 10	n = 12	n = 4	n = 6	n = 8	n = 10	n = 12	n = 4	n = 6	n = 8	n = 10	n = 12	n = 4	n = 6	n = 8	n = 10	n = 12	n = 4	n = 6	n = 8	n = 10	n = 12
11 '- 6 "	3 '- 6 "	40.8	61.2	81.7	102.1	122.5	120.8	140.0	140.0	140.0	140.0	40.8	61.2	81.7	102.1	122.5	43.7	65.6	87.5	109.3	131.2	137.6	140.0	140.0	140.0	140.0
	4 '- 0 "	35.7	53.6	71.5	89.3	107.2	105.7	140.0	140.0	140.0	140.0	35.7	53.6	71.5	89.3	107.2	38.3	57.4	76.5	95.7	114.8	120.4	140.0	140.0	140.0	140.0
	4 '- 6 "	31.8	47.6	63.5	79.4	95.3	94.0	140.0	140.0	140.0	140.0	31.8	47.6	63.5	79.4	95.3	34.0	51.0	66.0	85.0	102.1	107.0	140.0	140.0	140.0	140.0
	5 '- 0 "	28.6	42.9	57.2	71.5	85.7	84.6	126.9	140.0	140.0	140.0	28.6	42.9	57.2	71.5	85.7	30.6	45.9	61.2	76.5	91.6	96.3	140.0	140.0	140.0	140.0
	5 '- 6 "	26.0	39.0	52.0	65.0	78.0	76.9	115.3	140.0	140.0	140.0	26.0	39.0	52.0	65.0	78.0	27.8	41.7	55.7	69.6	83.5	87.6	131.4	140.0	140.0	140.0
	6 '- 0 "	23.8	35.7	47.6	69.6	71.5	70.5	105.7	140.0	140.0	-140.0	23.8	35.7	47.6	59.5	71.6	25.5	38.3	51.0	63.8	76.5	80.3	120.4	140.0	140.0	140.0
	6 '- 6 "	22.0	33.0	44.0	55.0	66.0	65.1	97.6	130.1	140.0	140.0	22.0	33.0	44.0	55.0	66.0	23.6	35.3	47.1	56.9	70.7	74.1	111.2	140.0	140.0	140.0
	7 '- 0 "	20.4	30.6	40.8	51.0	61.2	60.4	90.6	120.8	140.0	140.0	20.4	30.6	40.8	51.0	61.2	21.9	32.8	43.7	54.7	65.6	68.8	103.2	137.6	140.0	140.0
12 '- 0 "	3 '- 6 "	39.1	58.7	78.3	97.8	117.4	115.8	140.0	140.0	140.0	140.0	39.1	58.7	78.3	97.8	117.4	41.9	62.9	83.8	104.8	125.7	131.9	140.0	140.0	140.0	140.0
	4 '- 0 "	34.2	51.4	68.5	85.6	102.7	101.3	140.0	140.0	-140.0	140.0	34.2	51.4	68.5	85.6	102.7	36.7	55.0	73.3	91.7	110.0	115.4	140.0	140.0	140.0	140.0
	4 '- 6 "	30.4	45.7	60.9	76.1	91.3	-90.1	135.1	140.0	140.0	140.0	30.4	45.7	60.9	76.1	91.3	32.6	48.9	65.2	81.5	97.6	102.8	140.0	140.0	140.0	140.0
	5 '- 0 "	27.4	41.1	54.8	68.5	82.2	81.1	121.6	140.0	140.0	140.0	27.4	41.1	54.8	68.5	82.2	29.3	44.0	58.7	73.3	88.0	92.3	-138.5	140.0	140.0	140.0
	5 '- 6 "	24.9	37.4	49.8	62.3	74.7	73.7	110.5	140.0	140.0	140.0	24.9	37.4	49.8	62.3	74.7	26.7	40.0	53.3	66.7	80.0	83.9	125.9	140.0	140.0	140.0
	6 '- 0 "	22.8	34.2	45.7	57.1	68.5	67.5	101.3	135.1	140.0	140.0	22.8	34.2	45.7	57.1	66.5	24.4	36.7	48.9	61.1	73.3	76.9	115.4	140.0	140.0	140.0
	6 '- 6 "	21.1	31.6	42.1	52.7	63.2	62.4	93.5	124.7	140.0	140.0	21.1	31.6	42.1	52.7	63.2	22.6	33.9	45.1	-56.4	67.7	71.0	106.5	140.0	140.0	140.0
	7 '- 0 "	19.6	29.3	39.1	48.9	58.7	57.9	86.8	115.8	140.0	140.0	19.6	29.3	39.1	48.9	58.7	21.0	31.4	41.9	52.4	62.9	65.9	98.9	131.9	140.0	140.0
12 '- 6 "	3 '- 6 "	37.6	56.3	75.1	93.9	112.7	111.2	140.0	140.0	140.0	140.0	37.6	56.3	75.1	93.9	112.7	40.2	60.4	80.5	100.6	120.7	126.6	140.0	140.0	140.0	140.0
	4 '- 0 "	32.9	49.3	65.7	62.2	98.6	97.3	140.0	140.0	140.0	140.0	32.9	49.3	65.7	82.2	98.6	35.2	52.8	70.4	88.0	105.6	110.8	140.0	140.0	140.0	140.0
	4 '- 6 "	29.2	43.8	58.4	73.0	87.7	86.5	129.7	140.0	140.0	140.0	29.2	43.8	58.4	73.0	67.7	31.3	46.9	62.6	76.2	93.9	98.5	140.0	140.0	140.0	140.0
	5 '- 0 "	26.3	39.4	52.6	65.7	78.9	77.6	116.7	140.0	140.0	140.0	26.3	39.4	52.6	65.7	78.9	28.2	42.2	56.3	70.4	84.5	88.6	132.9	140.0	140.0	140.0
	5 '- 6 "	23.9	35.9	47.6	59.8	71.7	70.7	106.1	140.0	140.0	140.0	23.9	35.9	47.6	59.8	71.7	25.6	38.4	51.2	64.0	76.8	80.6	120.9	140.0	140.0	140.0
	6 '- 0 "	21.9	32.9	43.6	54.6	65.7	64.6	97.3	129.7	140.0	140.0	21.9	32.9	43.8	54.8	65.7	23.5	35.2	46.9	56.7	70.4	73.9	110.8	140.0	140.0	140.0
	6 '- 6 "	20.2	30.3	40.5	50.6	60.7	59.9	89.6	119.7	140.0	140.0	20.2	30.3	40.5	50.6	60.7	21.7	32.5	43.3	54.2	65.0	66.2	102.3	136.4	140.0	140.0
	7 '- 0 "	18.1	27.1	36.1	45.2	54.2	53.4	80.2	106.9	133.6	140.0	18.1	27.1	36.1	45.2	54.2	19.3	29.0	38.7	48.4	58.0	60.9	91.3	121.7	140.0	140.0
13 '- 0 "	3 '- 6 "	36.1	54.2	72.2	90.3	108.4	106.9	140.0	140.0	140.0	140.0	36.1	54.2	72.2	90.3	108.4	38.7	58.0	77.4	96.7	116.1	121.7	140.0	140.0	140.0	140.0
	4 '- 0 "	31.6	47.4	63.2	79.0	94.8	93.5	140.0	140.0	140.0	140.0	31.6	47.4	63.2	79.0	94.8	33.9	50.8	67.7	84.6	101.6	106.5	140.0	140.0	140.0	140.0
	4 '- 6 "	28.1	42.1	56.2	70.2	84.3	83.1	124.7	140.0	140.0	140.0	28.1	42.1	56.2	70.2	64.3	30.1	45.1	60.2	75.2	90.3	94.7	140.0	-140.0	140.0	140.0
	5 '- 0 "	25.3	37.9	50.6	63.2	75.9	74.8	112.2	140.0	140.0	140.0	25.3	37.9	50.6	63.2	75.9	27.1	40.6	54.2	67.7	81.2	85.2	127.8	140.0	140.0	140.0
	5 '- 6 "	23.0	34.5	46.0	57.5	69.0	-68.0	102.0	136.0	140.0	140.0	23.0	34.5	46.0	57.5	69.0	24.6	36.9	49.2	61.6	73.9	77.5	116.2	140.0	140.0	140.0
	6 '- 0 "	21.1	31.6	42.1	52.7	63.2	62.4	93.5	124.7	140.0	140.0	21.1	31.6	42.1	52.7	63.2	22.6	33.9	45.1	56.4	67.7	71.0	108.5	140.0	140.0	140.0
	6 '- 6 "	18.7	28.1	37.5	46.8	56.2	55.4	83.1	110.8	138.6	140.0	16.7	28.1	37.5	46.8	56.2	20.1	30.1	40.1	50.2	60.2	63.1	94.7	126.3	140.0	140.0
	7 '- 0 "	17.4	26.1	34.8	43.5	52.2	51.5	77.2	102.9	128.7	140.0	17.4	26.1	34.8	43.5	52.2	18.6	27.9	37.3	46.6	55.9	58.6	87.9	117.2	140.0	140.0
13 '- 6 "	3 '- 6 "	34.8	52.2	69.6	87.0	104.4	102.9	140.0	140.0	140.0	140.0	34.8	52.2	69.6	87.0	104.4	37.3	55.9	74.5	93.1	111.8	117.2	140.0	140.0	140.0	140.0
	4 '- 0 "	30.4	45.7	60.9	76.1	91.3	90.1	135.1	140.0	140.0	140.0	30.4	45.7	60.9	76.1	91.3	32.6	48.9	65.2	81.5	97.8	102.6	140.0	140.0	140.0	140.0
	4 '- 8 "	27.1	40.6	54.1	67.6	81.2	80.1	120.1	140.0	140.0	140.0	27.1	40.6	54.1	67.6	81.2	29.0	43.5	58.0	72.4	86.9	91.2	136.6	140.0	140.0	140.0
	5 '- 0 "	24.3	36.5	48.7	60.9	73.0	72.1	108.1	140.0	140.0	140.0	24.3	36.5	48.7	60.9	73.0	26.1	39.1	52.2	65.2	78.2	82.1	123.1	140.0	140.0	140.0
	5 '- 6 "	22.1	33.2	44.3	55.3	66.4	65.5	98.3	131.0	140.0	140.0	22.1	33.2	44.3	55.3	66.4	23.7	35.8	47.4	59.3	71.1	74.6	111.9	140.0	140.0	140.0
	6 '- 0 "	16.9	28.3	37.6	47.2	56.7	55.9	83.9	111.8	139.8	140.0	16.9	28.3	37.8	47.2	56.7	20.2	30.4	40.5	50.6	60.7	63.7	95.5	127.3	140.0	140.0
	6 '- 6 "	17.4	26.2	34.9	43.6	52.3	51.6	77.4	103.2	129.0	140.0	17.4	26.2	34.9	43.6	52.3	18.7	28.0	37.4	46.7	56.0	56.8	88.2	117.6	140.0	140.0
	7 '- 0 "	16.2	24.3	32.4	40.5	48.6	47.9	71.9	95.8	119.8	140.0	16.2	24.3	32.4	40.5	48.6	17.3	26.0	34.7	43.4	52.0	54.6	81.9	109.2	136.4	140.0
14 '- 6 "	3 '- 6 "	32.4	48.6	64.8	81.0	97.2	95.8	140.0	140.0	140.0	140.0	32.4	48.6	64.8	81.0	97.2	34.7	52.0	69.4	86.7	104.1	109.2	140.0	140.0	140.0	140.0
	4 '- 0 "	28.3	42.5	56.7	70.6	85.0	83.9	125.8	140.0	140.0	140.0	28.3	42.5	56.7	70.6	85.0	30.4	45.6	60.7	75.9	91.1	95.5	140.0	140.0	140.0	140.0
	4 '- 6 "	25.2	37.8	50.4	63.0	75.6	74.5	111.6	140.0	140.0	140.0	25.2	37.8	50.4	63.0	75.6	27.0	40.5	54.0	67.4	80.9	84.9	127.3	140.0	140.0	140.0
	5 '- 0 "	22.7	34.0	45.3	56.7	68.0	67.1	100.6	134.2	140.0	140.0	22.7	34.0	45.3	56.7	68.0	24.3	36.4	-48.6	60.7	72.8	76.4	114.6	140.0	140.0	140.0
	5 '- 6 "	19.9	29.9	39.6	49.6	59.6	59.0	88.4	117.9	140.0	140.0	19.9	29.9	39.6	49.6	59.6	21.3	32.0	42.7	53.3	84.0	67.1	100.7	134.3	140.0	140.0
	6 '- 0 "	18.3	27.4	36.5	45.7	54.6	54.0	81.1	108.1	135.1	140.0	18.3	27.4	36.5	45.7	54.8	19.6	29.3	39.1	46.9	58.7	61.6	92.3	123.1	140.0	140.0
	6 '- 6 "	16.9	25.3	33.7	42.1	-50.6	49.9	74.8	99.8	124.7	140.0	16.9	25.3	33.7	42.1	50.6	18.1	27.1	36.1	45.1	54.2	56.8	85.2	113.6	140.0	140.0
	7 '- 0 "	15.7	23.5	31.3	39.1	47.0	46.3	69.5	92.6	115.8	139.0	15.7	23.5	31.3	39.1	47.0	16.8	25.1	33.5	41.9	50.3	52.8	79.1	105.5	131.9	140.0

B FASTENERS TYPES & SUBSTRATES REQUIREMENTS:

A - 1/4"Ø ELCO CONSTRUCTION PRODUCTS, ULTRACON ANCHOR W/ 1 3/4" Min. EMBEDMENT INTO POURED CONCRETE (Min. f'c = 2.730 ksi), W/ S = 4" MIN. SPACING & 2 1/2" MIN. EDGE DISTANCE. FOR MAXIMUM SPACING, EMBEDMENT & EDGE DISTANCE ARE BEYOND ANY FINISH MATERIAL.

B - 3/8"Ø POWERS FASTENERS, WEDGE-BOLT ANCHOR W/ 2" Min. EMBEDMENT INTO POURED CONCRETE (Min. f'c = 3.0 ksi), W/ S = 3" MIN. SPACING & 3 1/4" MIN. EDGE DISTANCE. FOR MAXIMUM SPACING, EMBEDMENT & EDGE DISTANCE ARE BEYOND ANY FINISH MATERIAL.

C - 1/4"Ø ELCO CONSTRUCTION PRODUCTS, ULTRACON ANCHOR TO (2) 2" x WOOD BUCKS (G=0.55) W/ 3" Min. PENETRATION INTO WOOD, W/ S = 2" Min. SPACING & 1" MIN. EDGE DISTANCE. FOR MAXIMUM SPACING, EMBEDMENT & EDGE DISTANCE ARE BEYOND ANY FINISH MATERIAL.

D - 3/8"Ø LAG SCREW TO (2) 2" x WOOD BUCKS (G=0.55) W/ 3" Min. PENETRATION INTO WOOD, W/ S = 2" Min. SPACING & 1 1/2" MIN. EDGE DISTANCE. FOR MAXIMUM SPACING, EMBEDMENT & EDGE DISTANCE ARE BEYOND ANY FINISH MATERIAL.

E - 3/8"Ø TYPE "F" BOLT TO 1/4" Min. THK. ASTM A-36 STEEL W/ S = 2" MIN. SPACING & 1" MIN. EDGE DISTANCE OR 3/8"Ø SAE GRADE 5 GALVANIZED STEEL HHB THRU BOLT W/ NUT & LOCK WASHER.

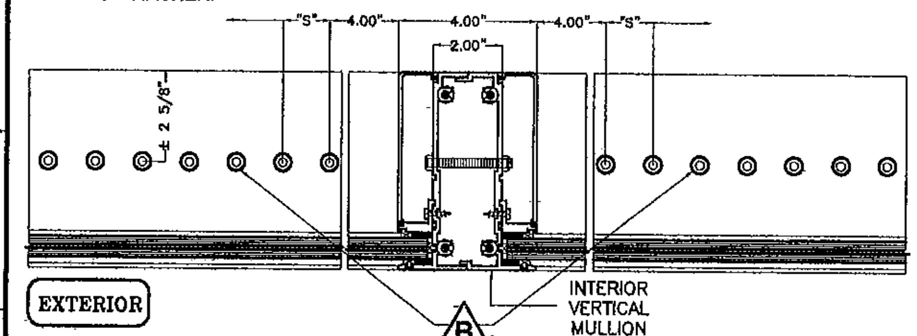

"n" FASTENERS

n = TOTAL NUMBER OF FASTENERS PER CONNECTION AT HEAD/SILL, EQUALLY INSTALLED AT EACH SIDE OF INTERIOR VERTICAL MULLION

SILL OR HEAD CONNECTION DETAIL @ INTERIOR VERTICAL MULLION

(PLAN VIEW)
N.T.S.

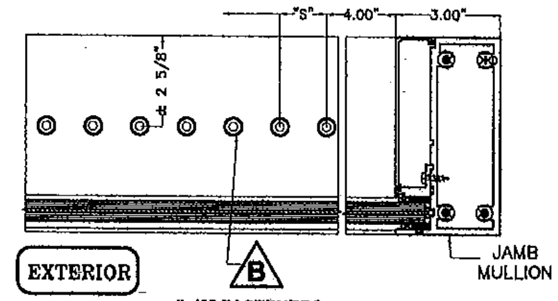

"n/2" FASTENERS

n/2 = TOTAL NUMBER OF FASTENERS PER CONNECTION AT HEAD/SILL, INSTALLED AT ONE SIDE OF JAMB MULLION

SILL OR HEAD CONNECTION DETAIL @ JAMB MULLION

(PLAN VIEW)
N.T.S.

Approved as complying with the Florida Building Code
Date JAN. 13, 2011
NOA# 10-0923.04
Miami Dade Product Control Division
By Manuel Perez

MIAMI-DADE COUNTY

WALTER A. TILLIT JR.
LICENSE
No. 44167
STATE OF FLORIDA
PROFESSIONAL ENGINEER

P.E. SEAL / SIGNATURE / DATE

FLORIDA BUILDING CODE (HIGH VELOCITY HURRICANE ZONE)

©2010 TILTECO, INC

TILTECO INC.
TILLIT TESTING & ENGINEERING COMPANY
8355 N.W. 36th St., Ste. 305, VIRGINIA GARDENS, FL 33166
Phone: (305)871-1530 . Fax: (305)871-1531
e-mail: tilteco@aol.com
EB-0006719
WALTER A. TILLIT Jr. P.E.
FLORIDA Lic. # 44167

HIGH IMPACT GREEN WORLD FIXED GLASS WALL SERIES 12000 LARGE MISSILE LAMINATED & INSULATED GLASS

GENERAL IMPACT GLASS & WINDOWS
The Clear Solution
290 WEST 78 ROAD
HIALEAH, FL. 33014
PHONE: (305) 558-8103
FAX: (305) 558-6665
www.generalimpact.com

M.C.V.
DRAWN BY

05/07/10
DATE

10-055
DRAWING No

REV. No	DESCRIPTION	DATE	REV. No	DESCRIPTION	DATE
1	-	-	3	-	-
2	-	-	4	-	-

MAXIMUM DESIGN PRESSURE RATING SCHEDULE FOR INTERIOR VERTICAL MULLION'S & JAMB MULLION'S HEAD/SILL CONNECTIONS

MAXIMUM MULLION SPAN	EFFECTIVE SPACING	MAXIMUM DESIGN PRESSURE RATING W (psf) FOR 3/8" MAX. LOAD BEARING SHIM SPACE (CONTINUED)																										
		POURED CONCRETE SUBSTRATE										WOOD (2) 2" x THK. SUBSTRATE										STEEL 1/4" Min. THK.				
		FASTENERS TYPE A (1/4"ø)					FASTENERS TYPE B (3/8"ø)					FASTENERS TYPE C (1/4"ø)					FASTENERS TYPE D (3/8"ø)					FASTENERS TYPE E (3/8"ø)				
"L" (Ft-in)	"b" (Ft-in)	n = 4	n = 6	n = 8	n = 10	n = 12	n = 4	n = 6	n = 8	n = 10	n = 12	n = 4	n = 6	n = 8	n = 10	n = 12	n = 4	n = 6	n = 8	n = 10	n = 12	n = 4	n = 6	n = 8	n = 10	n = 12
15 '- 0 "	3 '- 6 "	31.3	47.0	62.6	78.3	93.9	92.6	139.0	140.0	140.0	140.0	31.3	47.0	62.6	78.3	93.9	33.5	50.3	67.1	83.8	100.6	105.5	140.0	140.0	140.0	140.0
	4 '- 0 "	27.4	41.1	54.8	68.5	82.2	81.1	121.6	140.0	140.0	140.0	27.4	41.1	54.8	68.6	82.2	29.3	44.0	58.7	73.3	88.0	92.3	138.5	140.0	140.0	140.0
	4 '- 6 "	24.3	36.5	48.7	60.9	73.0	72.1	108.1	140.0	140.0	140.0	24.3	36.5	48.7	60.9	73.0	26.1	39.1	52.2	65.2	78.2	82.1	123.1	140.0	140.0	140.0
	5 '- 0 "	21.2	31.8	42.4	53.0	63.6	62.8	94.1	125.5	140.0	140.0	21.2	31.8	42.4	53.0	63.6	22.7	34.1	45.4	56.8	68.1	71.5	107.2	140.0	140.0	140.0
	5 '- 6 "	19.3	28.9	38.6	48.2	57.8	57.0	85.8	114.1	140.0	140.0	19.3	28.9	38.6	48.2	57.8	20.6	31.0	41.3	51.6	61.9	65.0	97.5	130.0	140.0	140.0
	8 '- 0 "	17.7	26.5	35.3	44.2	53.0	52.3	78.4	104.8	130.7	140.0	17.7	26.5	35.3	44.2	53.0	18.9	28.4	37.9	47.3	56.8	59.6	89.3	119.1	140.0	140.0
	6 '- 6 "	16.3	24.5	32.6	40.6	48.9	48.3	72.4	96.5	120.7	140.0	16.3	24.5	32.6	40.8	48.9	17.5	26.2	34.9	43.7	52.4	55.0	82.5	110.0	137.5	140.0
	7 '- 0 "	15.1	22.7	30.3	37.9	45.4	44.8	67.2	89.6	112.1	134.5	15.1	22.7	30.3	37.9	45.4	16.2	24.3	32.4	40.6	48.7	51.1	76.6	102.1	127.6	140.0
15 '- 6 "	3 '- 6 "	30.3	45.4	60.6	75.7	90.9	89.6	134.5	140.0	140.0	140.0	30.3	45.4	60.6	75.7	90.9	32.4	48.7	64.9	81.1	97.3	102.1	140.0	140.0	140.0	140.0
	4 '- 0 "	26.5	39.8	53.0	66.3	79.5	78.4	117.7	140.0	140.0	140.0	26.5	39.8	53.0	66.3	79.5	28.4	42.6	56.8	71.0	85.2	89.3	134.0	140.0	140.0	140.0
	4 '- 6 "	23.2	34.8	46.4	58.0	69.6	68.6	102.9	137.2	140.0	140.0	23.2	34.8	46.4	58.0	69.6	24.8	37.3	49.7	62.1	74.5	78.2	117.2	140.0	140.0	140.0
	5 '- 0 "	20.9	31.3	41.7	52.2	62.6	61.6	92.6	123.5	140.0	140.0	20.9	31.3	41.7	52.2	62.6	22.4	33.5	44.7	55.9	67.1	70.3	105.5	140.0	140.0	140.0
	5 '- 6 "	19.0	28.5	37.9	47.4	56.9	56.1	84.2	112.3	140.0	140.0	19.0	28.5	37.9	47.4	56.9	20.3	30.5	40.6	50.8	61.0	63.9	95.9	127.9	140.0	140.0
	6 '- 0 "	17.4	26.1	34.8	43.5	52.2	51.5	77.2	102.9	128.7	140.0	17.4	26.1	34.8	43.5	52.2	18.8	27.9	37.3	46.6	55.9	58.6	87.9	117.2	140.0	140.0
	6 '- 6 "	16.1	24.1	32.1	40.1	48.2	47.5	71.3	95.0	118.6	140.0	16.1	24.1	32.1	40.1	48.2	17.2	25.8	34.4	43.0	51.6	54.1	81.2	108.2	135.3	140.0
	7 '- 0 "	14.9	22.4	29.8	37.3	44.7	44.1	66.2	88.2	110.3	132.3	14.9	22.4	29.8	37.3	44.7	16.0	24.0	31.9	39.9	47.9	50.2	75.4	100.5	125.6	140.0
16 '- 9 "	3 '- 6 "	29.8	44.7	59.6	74.5	89.4	88.2	132.3	140.0	140.0	140.0	29.8	44.7	59.6	74.5	89.4	31.9	47.9	63.9	79.6	95.8	100.6	140.0	140.0	140.0	140.0
	4 '- 0 "	26.1	39.1	52.2	65.2	78.3	77.2	115.8	140.0	140.0	140.0	26.1	39.1	52.2	65.2	78.3	27.9	41.9	55.9	69.9	83.6	67.9	131.9	140.0	140.0	140.0
	4 '- 6 "	23.2	34.8	46.4	58.0	69.6	68.6	102.9	137.2	140.0	140.0	23.2	34.8	46.4	58.0	69.6	24.8	37.3	49.7	62.1	74.5	78.2	117.2	140.0	140.0	140.0
	5 '- 0 "	20.9	31.3	41.7	52.2	62.6	61.8	92.6	123.5	140.0	140.0	20.9	31.3	41.7	52.2	62.6	22.4	33.5	44.7	55.9	67.1	70.3	105.5	140.0	140.0	140.0
	5 '- 6 "	19.0	28.5	37.9	47.4	56.9	56.1	84.2	112.3	140.0	140.0	19.0	28.5	37.9	47.4	56.9	20.3	30.5	40.6	50.8	61.0	63.9	95.9	127.9	140.0	140.0
	6 '- 0 "	17.4	26.1	34.8	43.5	52.2	51.5	77.2	102.9	19.7	140.0	17.4	26.1	34.8	43.5	52.2	16.6	27.9	37.3	46.6	55.9	58.6	87.9	117.2	140.0	140.0
	6 '- 6 "	16.1	24.1	32.1	40.1	46.2	47.5	71.3	95.0	19.7	140.0	16.1	24.1	32.1	40.1	46.2	17.2	25.8	34.4	43.0	51.6	54.1	81.2	108.2	135.3	140.0
	7 '- 0 "	14.9	22.4	29.8	37.3	44.7	44.1	66.2	88.2	110.3	132.3	14.9	22.4	29.8	37.3	44.7	16.0	24.0	31.9	39.9	47.9	50.2	75.4	100.5	125.6	140.0

FASTENERS TYPES & SUBSTRATES REQUIREMENTS:

A - 1/4"Ø ELCO CONSTRUCTION PRODUCTS, ULTRACON ANCHOR W/ 1 3/4" Min. EMBEDMENT INTO POURED CONCRETE (Min. f'c = 2.730 ksi), W/ S = 4" MIN. SPACING & 2 1/2" MIN. EDGE DISTANCE. FOR MAXIMUM SPACING, EMBEDMENT & EDGE DISTANCE ARE BEYOND ANY FINISH MATERIAL.

B - 3/8"Ø POWERS FASTENERS, WEDGE-BOLT ANCHOR W/ 2" Min. EMBEDMENT INTO POURED CONCRETE (Min. f'c = 3.0 ksi), W/ S = 3" MIN. SPACING & 3 1/4" MIN. EDGE DISTANCE. FOR MAXIMUM SPACING, EMBEDMENT & EDGE DISTANCE ARE BEYOND ANY FINISH MATERIAL.

C - 1/4"Ø ELCO CONSTRUCTION PRODUCTS, ULTRACON ANCHOR TO (2) 2" x WOOD BUCKS (G=0.55) W/ 3" Min. PENETRATION INTO WOOD, W/ S = 2" Min. SPACING & 1" MIN. EDGE DISTANCE. FOR MAXIMUM SPACING, EMBEDMENT & EDGE DISTANCE ARE BEYOND ANY FINISH MATERIAL.

D - 3/8"Ø LAG SCREW TO (2) 2" x WOOD BUCKS (G=0.55) W/ 3" Min. PENETRATION INTO WOOD, W/ S = 2" Min. SPACING & 1 1/2" MIN. EDGE DISTANCE. FOR MAXIMUM SPACING, EMBEDMENT & EDGE DISTANCE ARE BEYOND ANY FINISH MATERIAL.

E - 3/8"Ø TYPE "F" BOLT TO 1/4" Min. THK. ASTM A-36 STEEL W/ S = 2" MIN. SPACING & 1" MIN. EDGE DISTANCE OR 3/8"Ø SAE GRADE 5 GALVANIZED STEEL HHB THRU BOLT W/ NUT & LOCK WASHER.

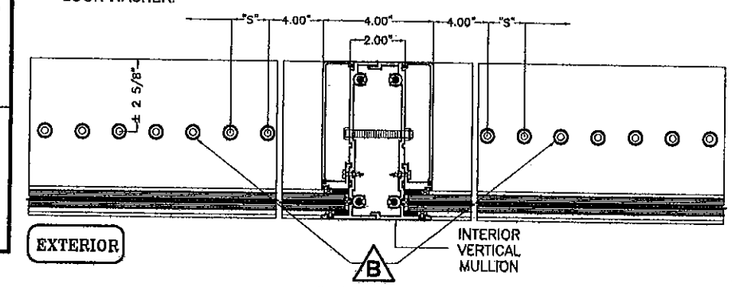

"n" FASTENERS
n = TOTAL NUMBER OF FASTENERS PER CONNECTION AT HEAD/SILL, EQUALLY INSTALLED AT EACH SIDE OF INTERIOR VERTICAL MULLION

SILL OR HEAD CONNECTION DETAIL @ INTERIOR VERTICAL MULLION
(PLAN VIEW)
N.T.S.

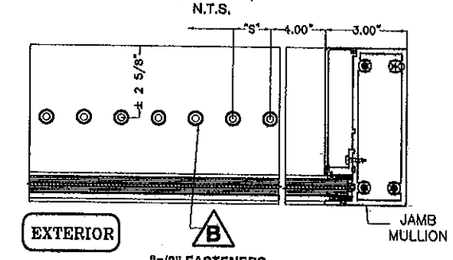

"n/2" FASTENERS
n/2 = TOTAL NUMBER OF FASTENERS PER CONNECTION AT HEAD/SILL, INSTALLED AT ONE SIDE OF JAMB MULLION

SILL OR HEAD CONNECTION DETAIL @ JAMB MULLION
(PLAN VIEW)
N.T.S.

Approved as complying with the Florida Building Code
Date JAN. 13, 2011
NOA# 10-0923.04
Miami Date Product Control Division
By Manuel Perez

MIAMI-DADE COUNTY

WALTER A. TILLIT JR. LICENSE No. 44167 STATE OF FLORIDA PROFESSIONAL ENGINEER

P.E. SEAL/SIGNATURE/DATE

FLORIDA BUILDING CODE (HIGH VELOCITY HURRICANE ZONE)

©2010 TILTECO, INC

TILTECO INC.
TILLIT TESTING & ENGINEERING COMPANY
6355 N.W. 36th. St., Ste. 305, VIRGINIA GARDENS, FL 33166
Phone : (305)871-1530 . Fax : (305)871-1531
e-mail: tilteco@aol.com
EB-0006719
WALTER A. TILLIT Jr. P.E.
FLORIDA Lic. # 44167

HIGH IMPACT GREEN WORLD FIXED GLASS WALL SERIES 12000 LARGE MISSILE LAMINATED & INSULATED GLASS

GENERAL IMPACT GLASS & WINDOWS
The Clear Solution
280 WEST 78 ROAD
HIALEAH, FL. 33014
PHONE: (305) 558-8103
FAX: (305) 558-6865
www.generalimpact.com

REV. No	DESCRIPTION	DATE	REV. No	DESCRIPTION	DATE
1	-	-	3	-	-
2	-	-	4	-	-

M.C.V.	DRAWN BY
05/07/10	DATE
10-055	DRAWING No
SHEET 13 OF 24	

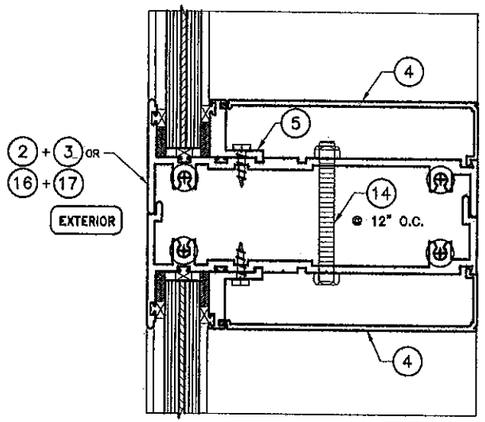

LAMINATED GLASS CASE

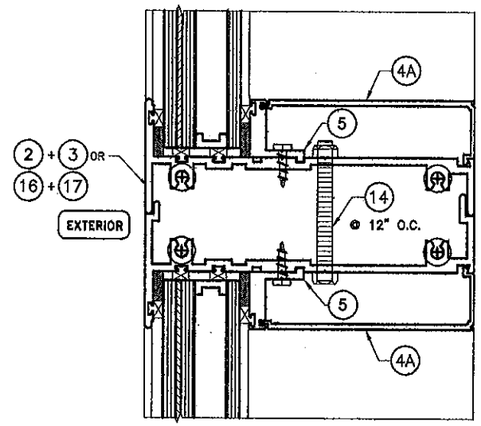

INSULATED GLASS CASE

SECTION AT HORIZONTAL MULLIONS

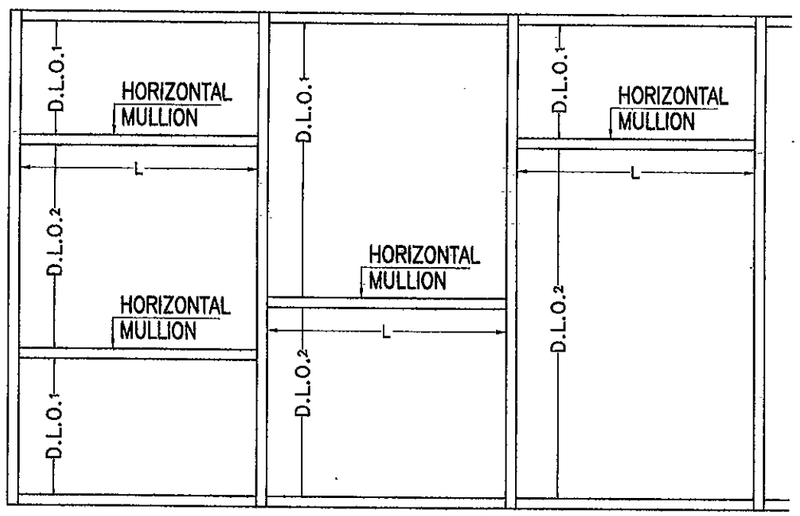

MULTIPLE PANELS

SINGLE PANEL

ELEVATIONS W/ HORIZONTAL MULLIONS

"L" = MAXIMUM HORIZONTAL MULLION SPAN

"D.L.O." = HORIZONTAL MULLION EFFECTIVE DAY LIGHT OPENING = $\frac{D.L.O._1 + D.L.O._2}{2}$

MAXIMUM HORIZONTAL MULLION SPAN "L"(FT) SCHEDULE FOR A GIVEN HORIZONTAL MULLION EFFECTIVE "D.L.O."(FT) AND A GIVEN DESIGN PRESSURE RATING "W" (psf)

MAXIMUM DESIGN PRESSURE RATING "W" (psf)	MAX. EFFECTIVE DAY LIGHT OPENING "DLO" (Ft-In)	MAXIMUM 1/8" & 3/16" THICK HORIZONTAL MULLION SPAN LAMINATED/INSULATED GLASS "L" (Ft)
± 40.0	2 '- 0 "	7 '- 0 "
	2 '- 6 "	7 '- 0 "
	3 '- 0 "	7 '- 0 "
	3 '- 6 "	7 '- 0 "
	4 '- 0 "	7 '- 0 "
	4 '- 6 "	7 '- 0 "
	5 '- 0 "	7 '- 0 "
	5 '- 6 "	7 '- 0 "
	6 '- 0 "	7 '- 0 "
	6 '- 6 "	7 '- 0 "
	7 '- 0 "	7 '- 0 "
	7 '- 6 "	7 '- 0 "
± 45.0	2 '- 0 "	7 '- 0 "
	2 '- 6 "	7 '- 0 "
	3 '- 0 "	7 '- 0 "
	3 '- 6 "	7 '- 0 "
	4 '- 0 "	7 '- 0 "
	4 '- 6 "	7 '- 0 "
	5 '- 0 "	7 '- 0 "
	5 '- 6 "	7 '- 0 "
	6 '- 0 "	7 '- 0 "
	6 '- 6 "	7 '- 0 "
	7 '- 0 "	7 '- 0 "
	7 '- 6 "	7 '- 0 "
± 50.0	2 '- 0 "	7 '- 0 "
	2 '- 6 "	7 '- 0 "
	3 '- 0 "	7 '- 0 "
	3 '- 6 "	7 '- 0 "
	4 '- 0 "	7 '- 0 "
	4 '- 6 "	7 '- 0 "
	5 '- 0 "	7 '- 0 "
	5 '- 6 "	7 '- 0 "
	6 '- 0 "	7 '- 0 "
	6 '- 6 "	7 '- 0 "
	7 '- 0 "	7 '- 0 "
	7 '- 6 "	7 '- 0 "
± 55.0	2 '- 0 "	7 '- 0 "
	2 '- 6 "	7 '- 0 "
	3 '- 0 "	7 '- 0 "
	3 '- 6 "	7 '- 0 "
	4 '- 0 "	7 '- 0 "
	4 '- 6 "	7 '- 0 "
	5 '- 0 "	7 '- 0 "
	5 '- 6 "	7 '- 0 "
	6 '- 0 "	7 '- 0 "
	6 '- 6 "	7 '- 0 "
	7 '- 0 "	7 '- 0 "
	7 '- 6 "	7 '- 0 "

MAXIMUM HORIZONTAL MULLION SPAN "L"(FT) SCHEDULE FOR A GIVEN HORIZONTAL MULLION EFFECTIVE "D.L.O."(FT) AND A GIVEN DESIGN PRESSURE RATING "W" (psf) (CONTINUED)

MAXIMUM DESIGN PRESSURE RATING "W" (psf)	MAX. EFFECTIVE DAY LIGHT OPENING "DLO" (Ft-In)	MAXIMUM 1/8" & 3/16" THICK HORIZONTAL MULLION SPAN LAMINATED/INSULATED GLASS "L" (Ft)
± 60.0	2 '- 0 "	7 '- 0 "
	2 '- 6 "	7 '- 0 "
	3 '- 0 "	7 '- 0 "
	3 '- 6 "	7 '- 0 "
	4 '- 0 "	7 '- 0 "
	4 '- 6 "	7 '- 0 "
	5 '- 0 "	7 '- 0 "
	5 '- 6 "	7 '- 0 "
	6 '- 0 "	7 '- 0 "
	6 '- 6 "	7 '- 0 "
	7 '- 0 "	7 '- 0 "
	7 '- 6 "	7 '- 0 "
± 65.0	2 '- 0 "	7 '- 0 "
	2 '- 6 "	7 '- 0 "
	3 '- 0 "	7 '- 0 "
	3 '- 6 "	7 '- 0 "
	4 '- 0 "	7 '- 0 "
	4 '- 6 "	7 '- 0 "
	5 '- 0 "	7 '- 0 "
	5 '- 6 "	7 '- 0 "
	6 '- 0 "	7 '- 0 "
	6 '- 6 "	7 '- 0 "
	7 '- 0 "	7 '- 0 "
	7 '- 6 "	7 '- 0 "
± 70.0	2 '- 0 "	7 '- 0 "
	2 '- 6 "	7 '- 0 "
	3 '- 0 "	7 '- 0 "
	3 '- 6 "	7 '- 0 "
	4 '- 0 "	7 '- 0 "
	4 '- 6 "	7 '- 0 "
	5 '- 0 "	7 '- 0 "
	5 '- 6 "	7 '- 0 "
	6 '- 0 "	7 '- 0 "
	6 '- 6 "	7 '- 0 "
	7 '- 0 "	7 '- 0 "
	7 '- 6 "	7 '- 0 "
± 75.0	2 '- 0 "	7 '- 0 "
	2 '- 6 "	7 '- 0 "
	3 '- 0 "	7 '- 0 "
	3 '- 6 "	7 '- 0 "
	4 '- 0 "	7 '- 0 "
	4 '- 6 "	7 '- 0 "
	5 '- 0 "	7 '- 0 "
	5 '- 6 "	7 '- 0 "
	6 '- 0 "	7 '- 0 "
	6 '- 6 "	7 '- 0 "
	7 '- 0 "	7 '- 0 "
	7 '- 6 "	6 '- 8 "

MAXIMUM HORIZONTAL MULLION SPAN "L"(FT) SCHEDULE FOR A GIVEN HORIZONTAL MULLION EFFECTIVE "D.L.O."(FT) AND A GIVEN DESIGN PRESSURE RATING "W" (psf) (CONTINUED)

MAXIMUM DESIGN PRESSURE RATING "W" (psf)	MAX. EFFECTIVE DAY LIGHT OPENING "DLO" (Ft-In)	MAXIMUM 1/8" & 3/16" THICK HORIZONTAL MULLION SPAN LAMINATED/INSULATED GLASS "L" (Ft)
± 80.0	2 '- 0 "	7 '- 0 "
	2 '- 6 "	7 '- 0 "
	3 '- 0 "	7 '- 0 "
	3 '- 6 "	7 '- 0 "
	4 '- 0 "	7 '- 0 "
	4 '- 6 "	7 '- 0 "
	5 '- 0 "	7 '- 0 "
	5 '- 6 "	7 '- 0 "
	6 '- 0 "	7 '- 0 "
	6 '- 6 "	7 '- 0 "
	7 '- 0 "	6 '- 8 "
	7 '- 6 "	6 '- 3 "
± 85.0	2 '- 0 "	7 '- 0 "
	2 '- 6 "	7 '- 0 "
	3 '- 0 "	7 '- 0 "
	3 '- 6 "	7 '- 0 "
	4 '- 0 "	7 '- 0 "
	4 '- 6 "	7 '- 0 "
	5 '- 0 "	7 '- 0 "
	5 '- 6 "	7 '- 0 "
	6 '- 0 "	7 '- 0 "
	6 '- 6 "	6 '- 10 "
	7 '- 0 "	6 '- 4 "
	7 '- 6 "	5 '- 11 "
± 90.0	2 '- 0 "	7 '- 0 "
	2 '- 6 "	7 '- 0 "
	3 '- 0 "	7 '- 0 "
	3 '- 6 "	7 '- 0 "
	4 '- 0 "	7 '- 0 "
	4 '- 6 "	7 '- 0 "
	5 '- 0 "	7 '- 0 "
	5 '- 6 "	7 '- 0 "
	6 '- 0 "	6 '- 11 "
	6 '- 6 "	6 '- 5 "
	7 '- 0 "	6 '- 0 "
	7 '- 6 "	5 '- 7 "
± 95.0	2 '- 0 "	7 '- 0 "
	2 '- 6 "	7 '- 0 "
	3 '- 0 "	7 '- 0 "
	3 '- 6 "	7 '- 0 "
	4 '- 0 "	7 '- 0 "
	4 '- 6 "	7 '- 0 "
	5 '- 0 "	7 '- 0 "
	5 '- 6 "	7 '- 0 "
	6 '- 0 "	6 '- 7 "
	8 '- 6 "	6 '- 1 "
	7 '- 0 "	5 '- 8 "
	7 '- 6 "	5 '- 3 "

Approved as complying with the Florida Building Code
Date JAN. 13, 2011
NOA# 10-0923.04
Miami Dade Product Control Division
By Manuel Perez

MIAMI-DADE COUNTY

WALTER A. TILLIT JR.
LICENSE
No. 44167
STATE OF FLORIDA
PROFESSIONAL ENGINEER

P.E. SEAL, SIGNATURE & DATE

FLORIDA BUILDING CODE (HIGH VELOCITY HURRICANE ZONE)

©2010 TILTECO, INC

TILTECO INC.
TILLIT TESTING & ENGINEERING COMPANY
6355 N.W. 36th. St., Ste. 305, VIRGINIA GARDENS, Fl. 33166
Phone : (305)871-1530 . Fax : (305)871-1531
e-mail: tilteco@aol.com
EB-0006719
WALTER A. TILLIT Jr. P.E.
FLORIDA Lic. # 44167

HIGH IMPACT GREEN WORLD FIXED GLASS WALL SERIES 12000 LARGE MISSILE LAMINATED & INSULATED GLASS

GENERAL IMPACT GLASS & WINDOWS
The Clear Solution
290 WEST 78 ROAD
HIALEAH, FL. 33014
PHONE: (305) 558-8103
FAX: (305) 558-6665
www.generalimpact.com

REV. No	DESCRIPTION	DATE	REV. No	DESCRIPTION	DATE
1	-	-	3	-	-
2	-	-	4	-	-

M.C.V.
DRAWN BY

05/07/10
DATE

10-055
DRAWING No

SHEET 14 OF 24

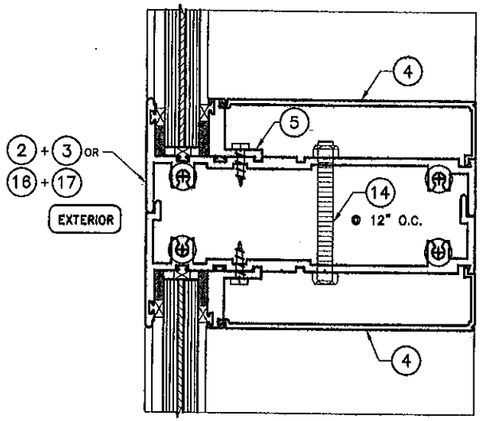

LAMINATED GLASS CASE

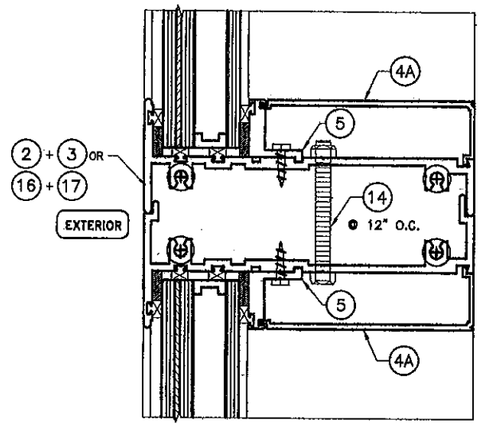

INSULATED GLASS CASE

SECTION AT HORIZONTAL MULLIONS

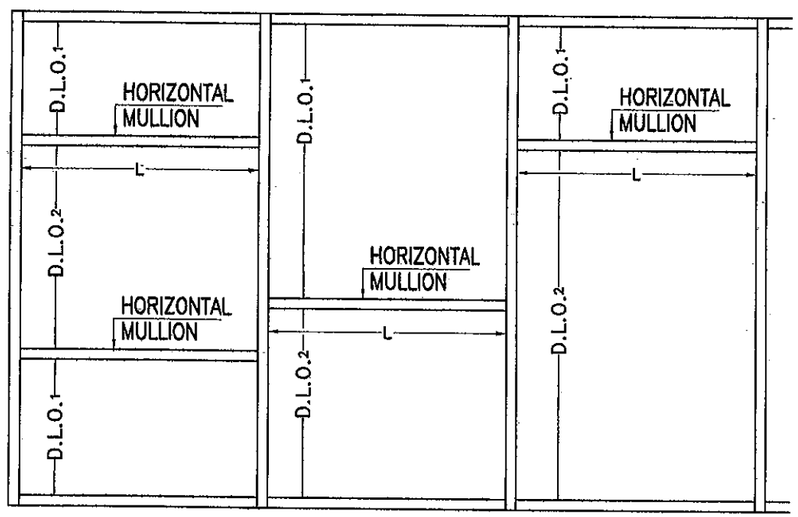

MULTIPLE PANELS

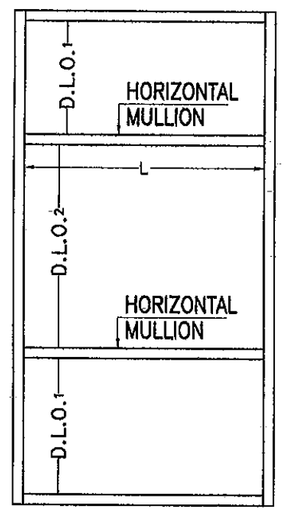

SINGLE PANEL

ELEVATIONS W/ HORIZONTAL MULLIONS

"L" = MAXIMUM HORIZONTAL MULLION SPAN

"D.L.O." = HORIZONTAL MULLION EFFECTIVE DAY LIGHT OPENING = $\frac{D.L.O._1 + D.L.O._2}{2}$

MAXIMUM HORIZONTAL SPAN "L"(FT) SCHEDULE FOR A GIVEN HORIZONTAL MULLION EFFECTIVE "D.L.O."(FT) AND A GIVEN DESIGN PRESSURE RATING "W" (psf) (CONTINUED)

MAXIMUM DESIGN PRESSURE RATING "W" (psf)	MAX. EFFECTIVE DAY LIGHT OPENING 'DLO' (Ft-In)	MAXIMUM 1/8" & 3/16" THICK HORIZONTAL RAILS SPAN LAMINATED/INSULATED GLASS "L" (Ft)
± 100.0	2 '- 0 "	7 '- 0 "
	2 '- 6 "	7 '- 0 "
	3 '- 0 "	7 '- 0 "
	3 '- 6 "	7 '- 0 "
	4 '- 0 "	7 '- 0 "
	4 '- 6 "	7 '- 0 "
	5 '- 0 "	7 '- 0 "
	6 '- 0 "	6 '- 3 "
	6 '- 6 "	5 '- 9 "
	7 '- 0 "	5 '- 4 "
	7 '- 6 "	5 '- 0 "
± 105.0	2 '- 0 "	7 '- 0 "
	2 '- 6 "	7 '- 0 "
	3 '- 0 "	7 '- 0 "
	3 '- 6 "	7 '- 0 "
	4 '- 0 "	7 '- 0 "
	4 '- 6 "	7 '- 0 "
	5 '- 0 "	7 '- 0 "
	6 '- 0 "	6 '- 0 "
	6 '- 6 "	5 '- 6 "
	7 '- 0 "	5 '- 1 "
	7 '- 6 "	4 '- 9 "
± 110.0	2 '- 0 "	7 '- 0 "
	2 '- 6 "	7 '- 0 "
	3 '- 0 "	7 '- 0 "
	3 '- 6 "	7 '- 0 "
	4 '- 0 "	7 '- 0 "
	4 '- 6 "	7 '- 0 "
	5 '- 0 "	6 '- 10 "
	6 '- 0 "	5 '- 8 "
	6 '- 6 "	5 '- 3 "
	7 '- 0 "	4 '- 11 "
	7 '- 6 "	4 '- 7 "
± 115.0	2 '- 0 "	7 '- 0 "
	2 '- 6 "	7 '- 0 "
	3 '- 0 "	7 '- 0 "
	3 '- 6 "	7 '- 0 "
	4 '- 0 "	7 '- 0 "
	4 '- 6 "	7 '- 0 "
	5 '- 0 "	6 '- 6 "
	6 '- 0 "	5 '- 5 "
	6 '- 6 "	5 '- 0 "
	7 '- 0 "	4 '- 8 "
	7 '- 6 "	4 '- 4 "

MAXIMUM HORIZONTAL SPAN "L"(FT) SCHEDULE FOR A GIVEN HORIZONTAL MULLION EFFECTIVE "D.L.O."(FT) AND A GIVEN DESIGN PRESSURE RATING "W" (psf) (CONTINUED)

MAXIMUM DESIGN PRESSURE RATING "W" (psf)	MAX. EFFECTIVE DAY LIGHT OPENING 'DLO' (Ft-In)	MAXIMUM 1/8" & 3/16" THICK HORIZONTAL RAILS SPAN LAMINATED/INSULATED GLASS "L" (Ft)
± 120.0	2 '- 0 "	7 '- 0 "
	2 '- 6 "	7 '- 0 "
	3 '- 0 "	7 '- 0 "
	3 '- 6 "	7 '- 0 "
	4 '- 0 "	7 '- 0 "
	4 '- 6 "	6 '- 11 "
	5 '- 0 "	6 '- 3 "
	6 '- 0 "	5 '- 3 "
	6 '- 6 "	4 '- 10 "
	7 '- 0 "	4 '- 6 "
	7 '- 6 "	4 '- 2 "
± 125.0	2 '- 0 "	7 '- 0 "
	2 '- 6 "	7 '- 0 "
	3 '- 0 "	7 '- 0 "
	3 '- 6 "	7 '- 0 "
	4 '- 0 "	7 '- 0 "
	4 '- 6 "	6 '- 8 "
	5 '- 0 "	6 '- 0 "
	6 '- 0 "	5 '- 0 "
	6 '- 6 "	4 '- 7 "
	7 '- 0 "	4 '- 4 "
	7 '- 6 "	4 '- 0 "
± 130.0	2 '- 0 "	7 '- 0 "
	2 '- 6 "	7 '- 0 "
	3 '- 0 "	7 '- 0 "
	3 '- 6 "	7 '- 0 "
	4 '- 0 "	7 '- 0 "
	4 '- 6 "	6 '- 5 "
	5 '- 0 "	5 '- 9 "
	6 '- 0 "	4 '- 10 "
	6 '- 6 "	4 '- 5 "
	7 '- 0 "	4 '- 2 "
	7 '- 6 "	3 '- 10 "
+130.0,- 135.0	2 '- 0 "	7 '- 0 "
	2 '- 6 "	7 '- 0 "
	3 '- 0 "	7 '- 0 "
	3 '- 6 "	7 '- 0 "
	4 '- 0 "	6 '- 11 "
	4 '- 6 "	6 '- 2 "
	5 '- 0 "	5 '- 7 "
	6 '- 0 "	4 '- 6 "
	6 '- 6 "	4 '- 3 "
	7 '- 0 "	4 '- 0 "
	7 '- 6 "	3 '- 9 "
+130.0,- 140.0	2 '- 0 "	7 '- 0 "
	2 '- 6 "	7 '- 0 "
	3 '- 0 "	7 '- 0 "
	3 '- 6 "	7 '- 0 "
	4 '- 0 "	6 '- 8 "
	4 '- 6 "	6 '- 0 "
	5 '- 0 "	5 '- 4 "
	6 '- 0 "	4 '- 6 "
	6 '- 6 "	4 '- 2 "
	7 '- 0 "	3 '- 10 "
	7 '- 6 "	3 '- 7 "

Approved as complying with the Florida Building Code
Date JAN. 13 2011
NOA# 10-0923.04
Miami Dade Product Control Division
By Manuel Perez

MIAMI-DADE COUNTY

WALTER A. TILLIT JR.
LICENSE
No. 44167
STATE OF FLORIDA
PROFESSIONAL ENGINEER

P.E. SEAL / SIGNATURE / DATE

FLORIDA BUILDING CODE (HIGH VELOCITY HURRICANE ZONE)

©2010 TILTECO, INC

TILTECO INC.
TILLIT TESTING & ENGINEERING COMPANY
6355 N.W. 36th. St., Ste. 305, VIRGINIA GARDENS, Fl. 33166
Phone : (305)871-1530 . Fax : (305)871-1531
e-mail: tilteco@aol.com
EB-0008719
WALTER A. TILLIT Jr. P.E.
FLORIDA Lic. # 44167

HIGH IMPACT GREEN WORLD FIXED GLASS WALL
SERIES 12000 LARGE MISSILE LAMINATED & INSULATED GLASS

GENERAL IMPACT GLASS & WINDOWS
The Clear Solution
290 WEST 78 ROAD
HIALEAH, FL. 33014
PHONE: (305) 556-8103
FAX: (305) 558-6665
www.generalimpact.com

REV. No	DESCRIPTION	DATE	REV. No	DESCRIPTION	DATE
1	–	–	3	–	–
2	–	–	4	–	–

M.C.V.
DRAWN BY

05/07/10
DATE

10-055
DRAWING No

HORIZONTAL MULLION DETAILS

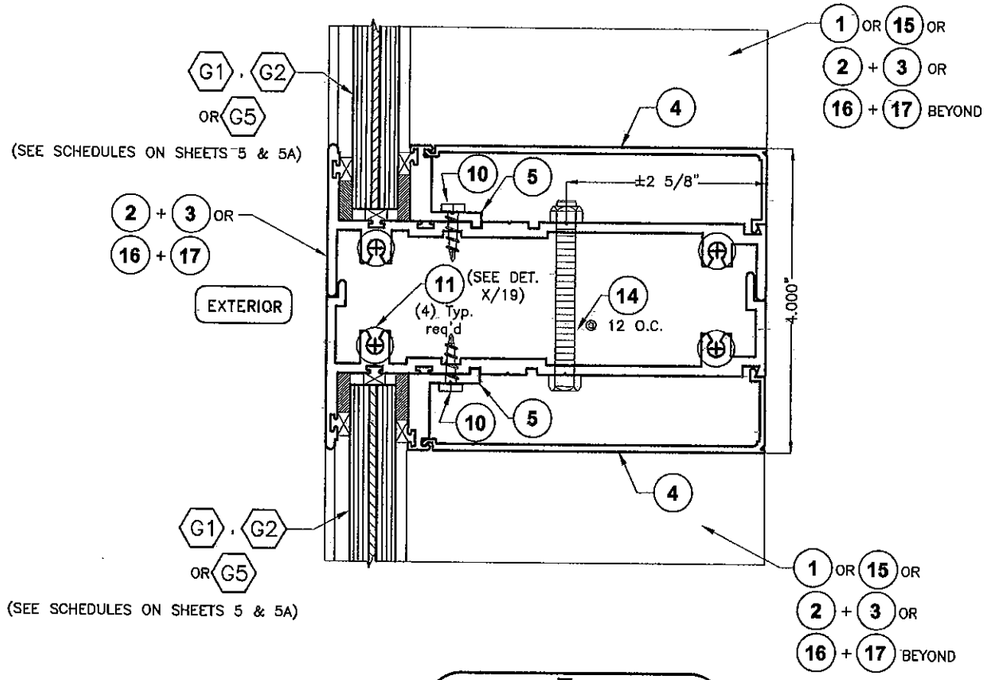

7
HORIZONTAL MULLION

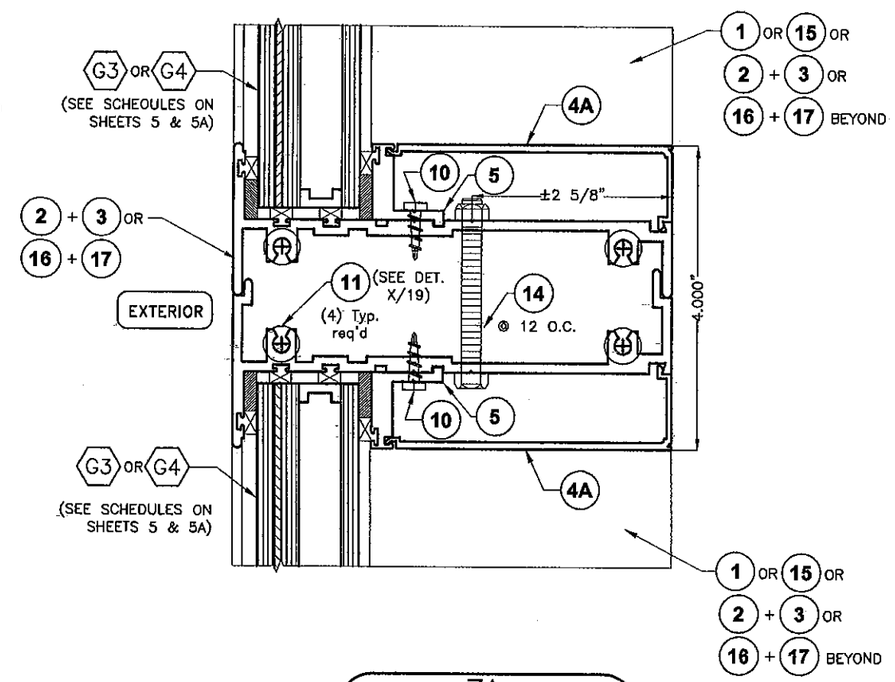

7A
HORIZONTAL MULLION

Approved as complying with the Florida Building Code
Date JAN. 13, 2011
NOA# 10-0923.04
Miami Dade Product Control Division
By

MIAMI-DADE COUNTY

WALTER A. TILLIT JR.
LICENSE
No. 44167
STATE OF FLORIDA
PROFESSIONAL ENGINEER

P.E. SEAL/SIGNATURE/DATE

FLORIDA BUILDING CODE (HIGH VELOCITY HURRICANE ZONE)

©2010 TILTECO, INC

TILTECO INC.
TILLIT TESTING & ENGINEERING COMPANY
6355 N.W. 36th. St., Ste. 305, VIRGINIA GARDENS, FL 33166
Phone : (305)871-1530 . Fax : (305)871-1531
e-mail: tilteco@aol.com
EB-0006719
WALTER A. TILLIT Jr. P.E.
FLORIDA Lic. # 44167

HIGH IMPACT GREEN WORLD FIXED GLASS WALL
SERIES 12000 LARGE MISSILE LAMINATED & INSULATED GLASS

GENERAL IMPACT GLASS & WINDOWS
The Clear Solution
290 WEST 78 ROAD
HIALEAH, FL. 33014
PHONE: (305) 558-8103
FAX: (305) 558-6665
www.generalimpact.com

REV. No	DESCRIPTION	DATE	REV. No	DESCRIPTION	DATE
1	REFERENCE 5A WAS ADDED	12/16/10	3	–	–
2	–	–	4	–	–

M.C.V.
DRAWN BY

05/07/10
DATE

10-055
DRAWING No

HEAD & SILL CONNECTIONS DETAILS

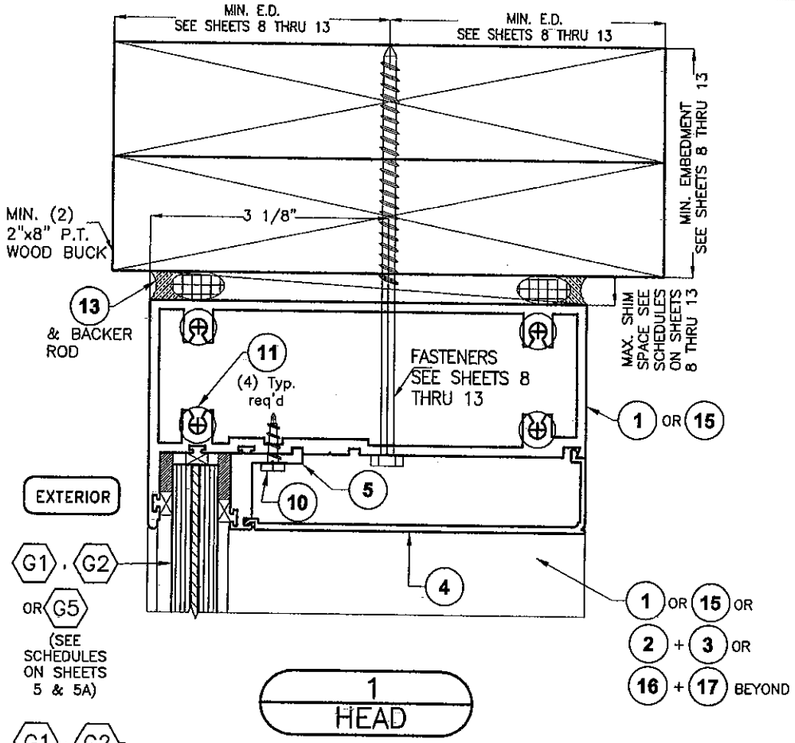

1
HEAD

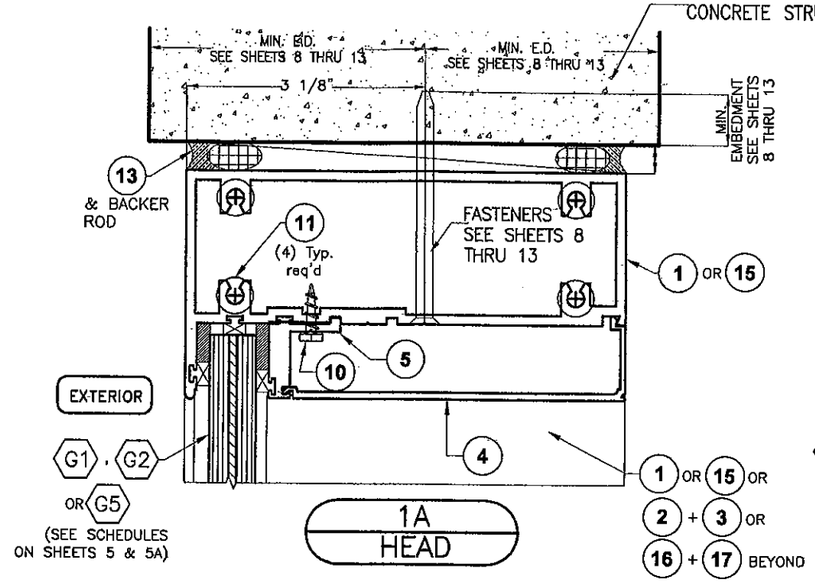

1A
HEAD

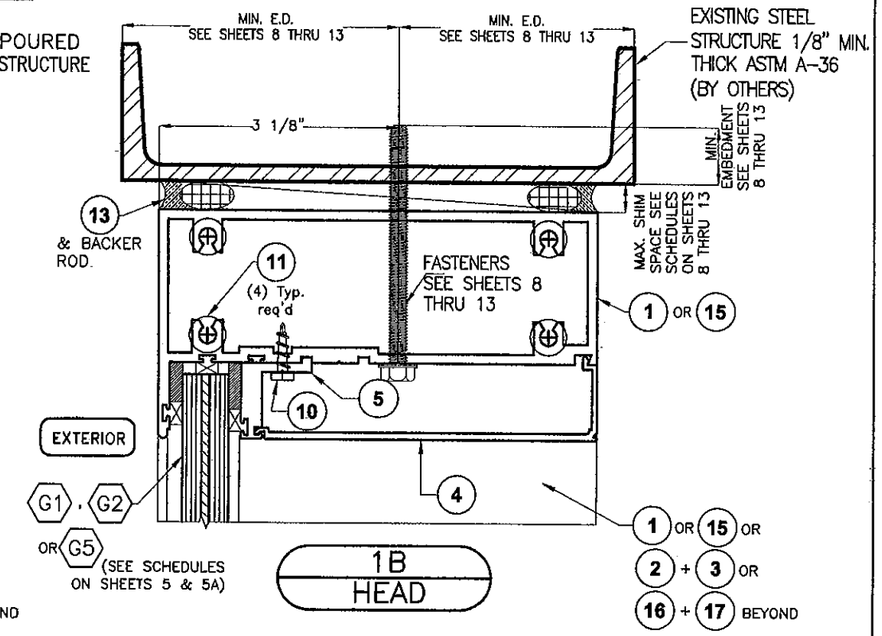

1B
HEAD

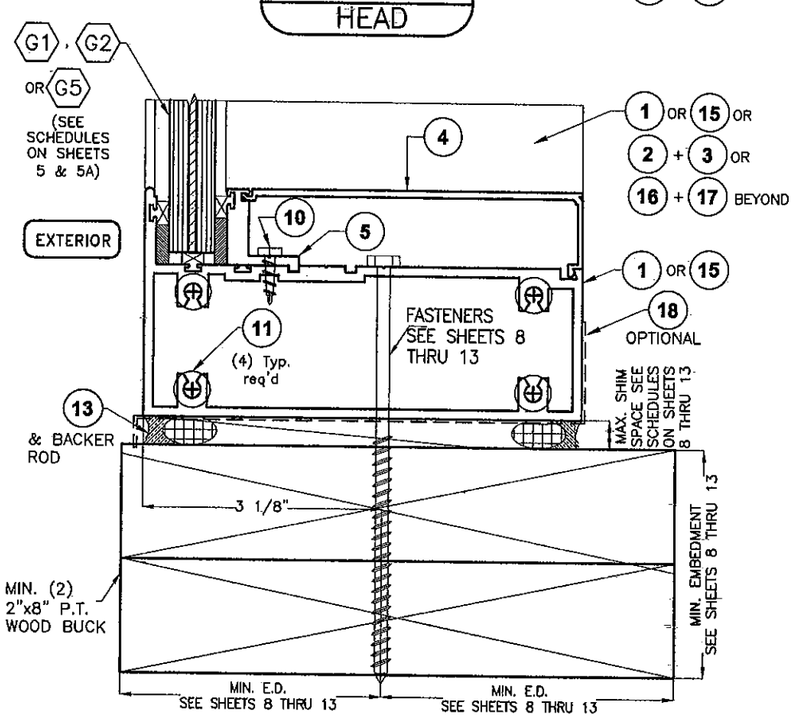

2
SILL

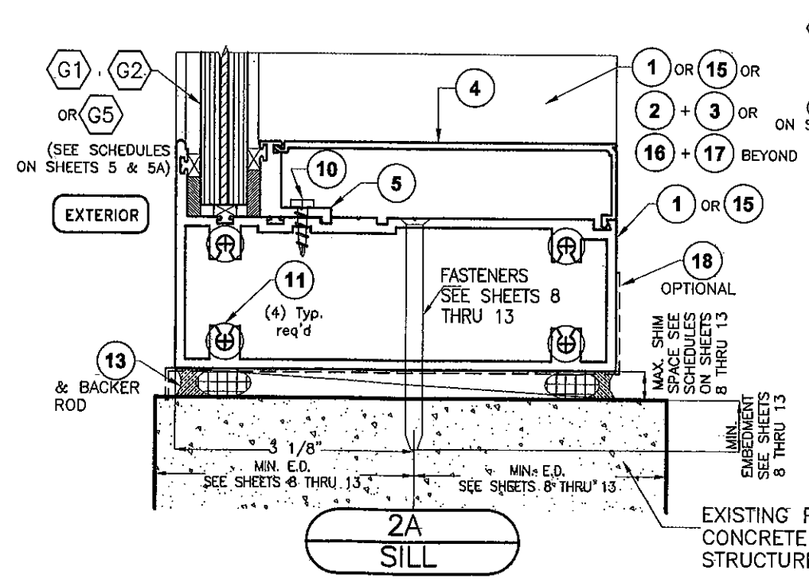

2A
SILL

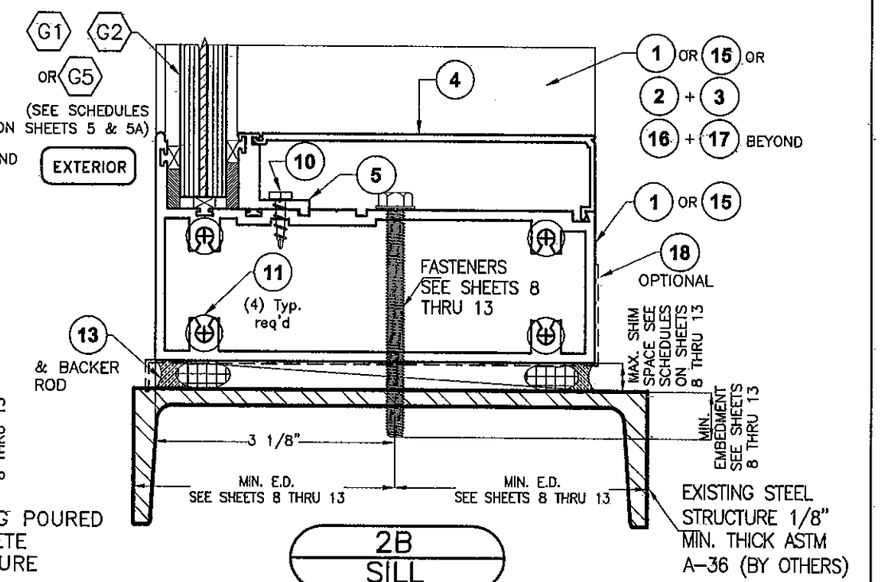

2B
SILL

Approved as complying with the
Florida Building Code
Date JAN. 13, 2011
NOA# 10-0923.04
Miami Dade Product Control
Division
By Manuel Perez

MIAMI-DADE COUNTY

WALTER A. TILLIT JR.
LICENSE
No. 44167
STATE OF
FLORIDA
PROFESSIONAL ENGINEER

P.E. SEAL, SIGNATURE/DATE

FLORIDA BUILDING CODE (HIGH VELOCITY HURRICANE ZONE)

©2010 TILTECO, INC

TILTECO INC.
TILLIT TESTING & ENGINEERING COMPANY
8355 N.W. 36th. St., Ste. 305, VIRGINIA GARDENS, Fl. 33166
Phone : (305)871-1530 . Fax : (305)871-1531
e-mail: tilteco@aol.com
EB-0006719
WALTER A. TILLIT Jr. P.E.
FLORIDA Lic. # 44167

HIGH IMPACT GREEN WORLD FIXED GLASS WALL
SERIES 12000 LARGE MISSILE LAMINATED &
INSULATED GLASS

GENERAL
IMPACT GLASS & WINDOWS
The Clear Solution
290 WEST 76 ROAD
HIALEAH, FL. 33014
PHONE: (305) 558-8103
FAX: (305) 558-6665
www.generalimpact.com

REV. No	DESCRIPTION	DATE	REV. No	DESCRIPTION	DATE
1	REFERENCE 5A WAS ADDED	12/16/10	3	-	-
2	-	-	4	-	-

M.C.V.
DRAWN BY

05/07/10
DATE

10-055
DRAWING No

SHEET 17 OF 24

HEAD & SILL CONNECTIONS DETAILS (CONTINUED)

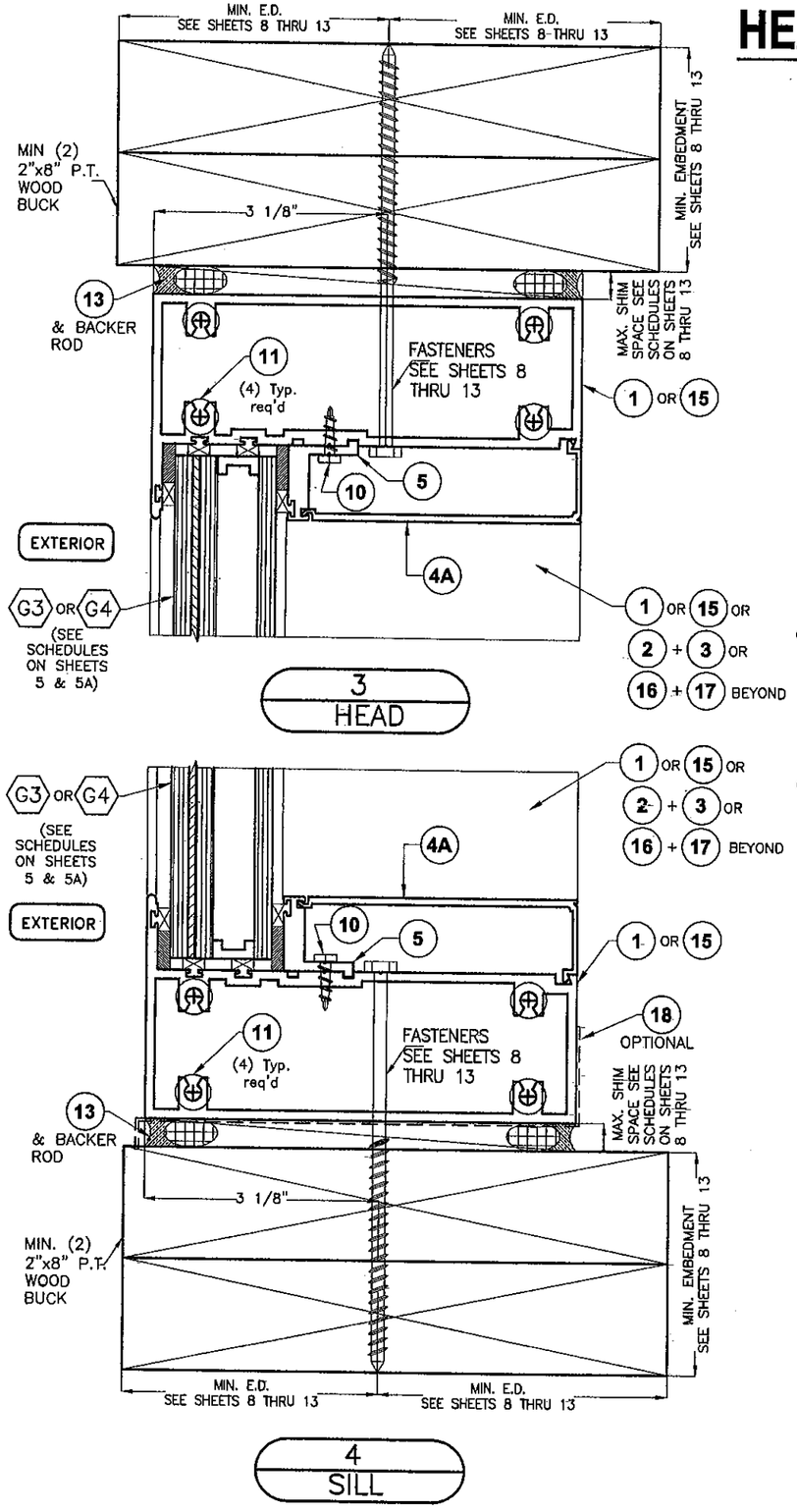

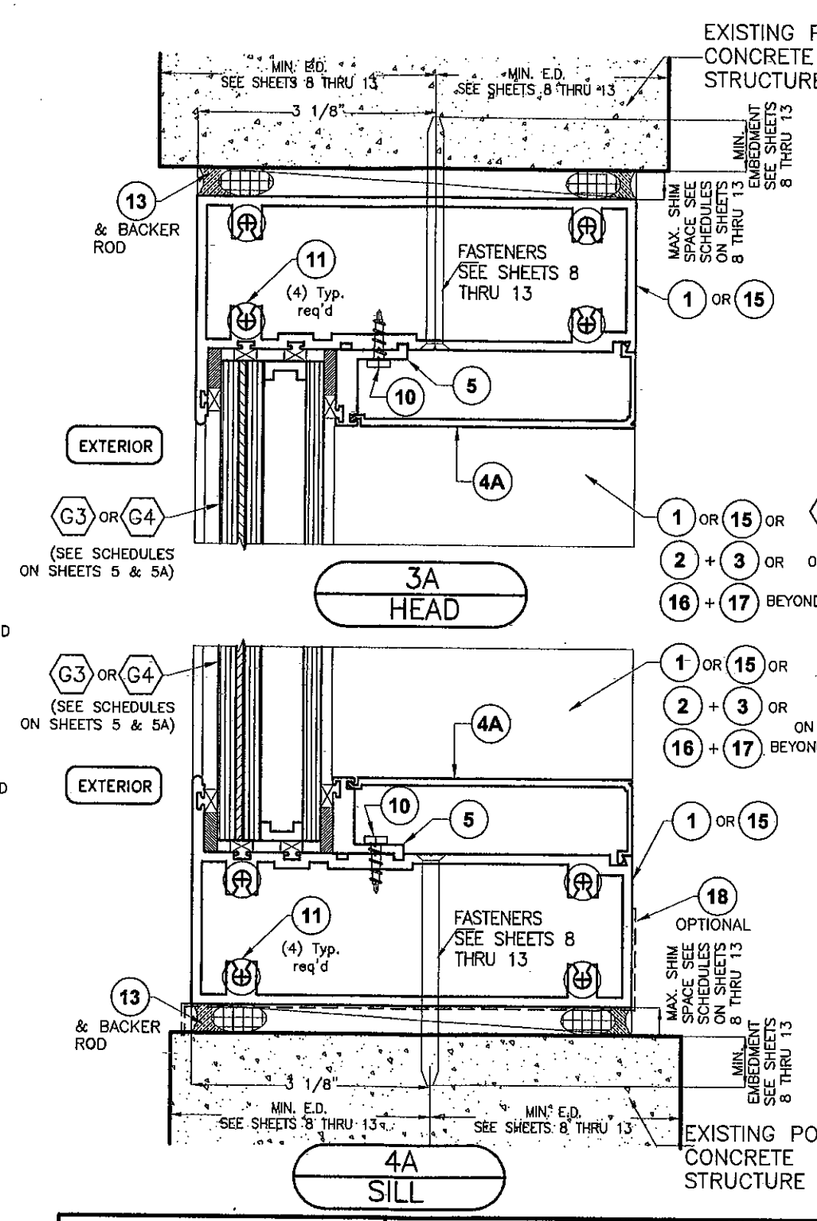

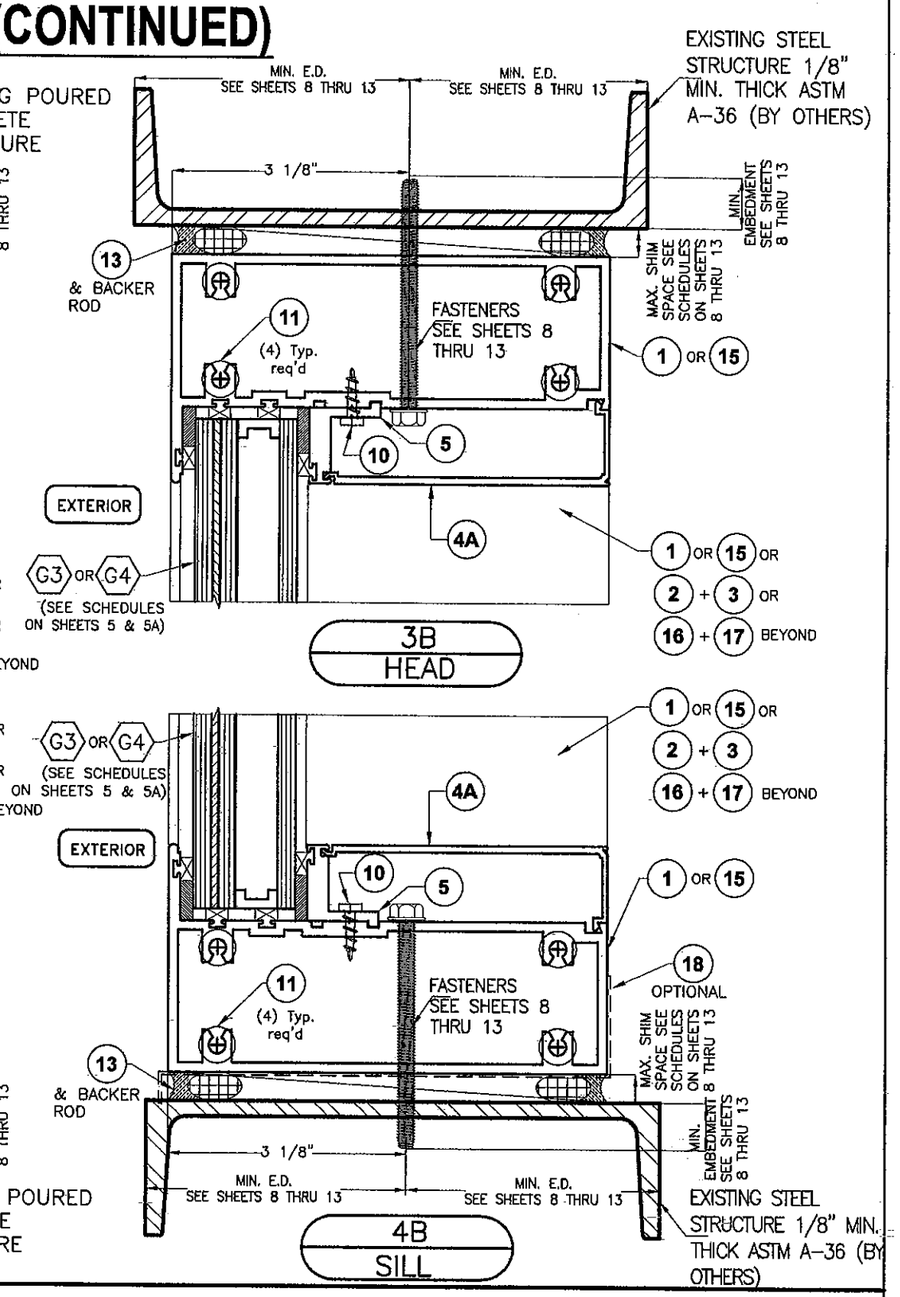

Approved as complying with the Florida Building Code
Date JAN. 13, 2011
NOA# 10-0923.04
Miami Dade Product Control Division
By Manuel Perez

MIAMI-DADE COUNTY

WALTER A. TILLIT JR. LICENSE No. 44167 STATE OF FLORIDA PROFESSIONAL ENGINEER

P.E. SEAL / SIGNATURE / DATE

FLORIDA BUILDING CODE (HIGH VELOCITY HURRICANE ZONE)

©2010 TILTECO, INC

TILTECO INC.
TILLIT TESTING & ENGINEERING COMPANY
6355 N.W. 36th. St., Ste. 305, VIRGINIA GARDENS, Fl. 33166
Phone : (305)871-1530 . Fax : (305)871-1531
e-mail: tilteco@aol.com
EB-0006719
WALTER A. TILLIT Jr. P.E.
FLORIDA Lic. # 44167

HIGH IMPACT GREEN WORLD FIXED GLASS WALL SERIES 12000 LARGE MISSILE LAMINATED & INSULATED GLASS

GENERAL IMPACT GLASS & WINDOWS
The Clear Solution
290 WEST 78 ROAD
HIALEAH, FL. 33014
PHONE: (305) 558-8103
FAX: (305) 558-6665
www.generalimpact.com

REV. No	DESCRIPTION	DATE	REV. No	DESCRIPTION	DATE
1	REFERENCE 5A WAS ADDED	12/18/10	3	-	-
2	-	-	4	-	-

M.C.V.
DRAWN BY

05/07/10
DATE

10-055
DRAWING No

HORIZONTAL SECTIONS AT INTERIOR VERTICAL MULLIONS AT STRAIGHT GLASS WALL APPLICATIONS

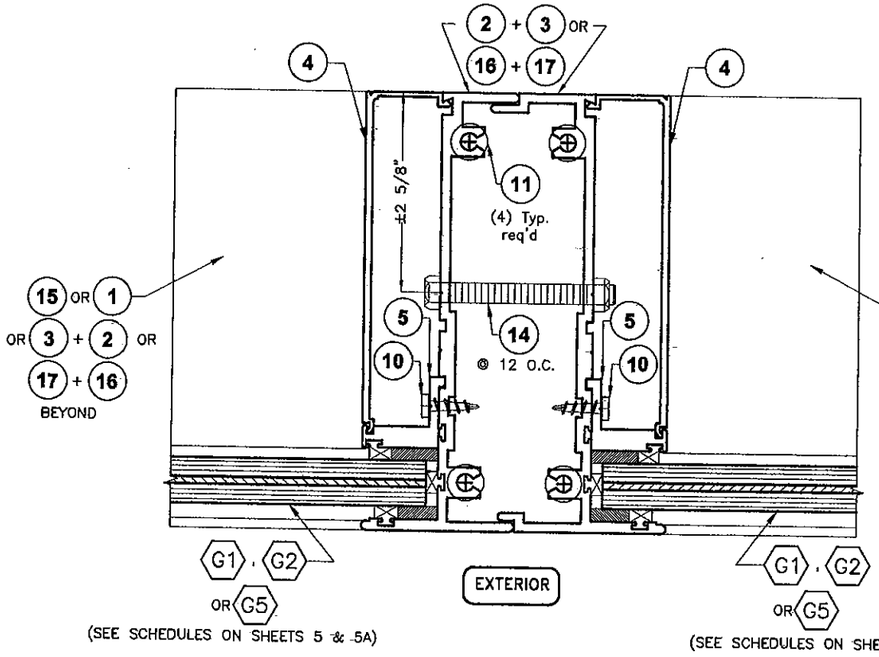

5
INTERIOR VERTICAL MULLION

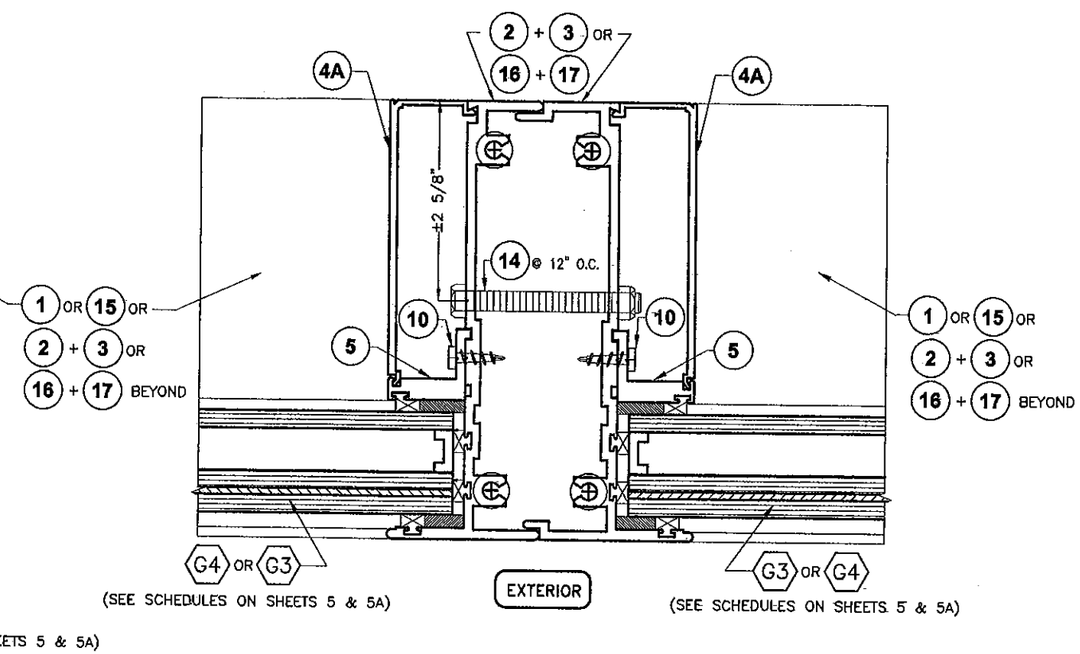

6
INTERIOR VERTICAL MULLION

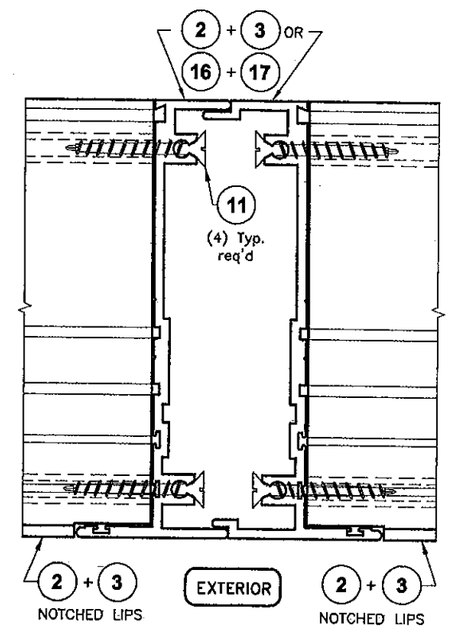

DETAIL X
HORIZONTAL MULLION TO INTERIOR VERTICAL MULLION

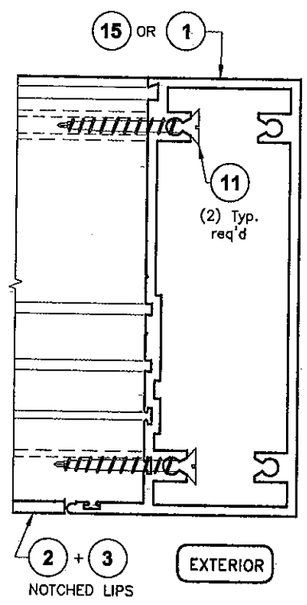

DETAIL X
HORIZONTAL MULLION TO JAMB MULLION

Approved as complying with the Florida Building Code
Date JAN. 13, 2011
NOA# 10-0923.04
Miami Dade Product Control Division
By Manuel Perez

MIAMI–DADE COUNTY

WALTER A. TILLIT JR.
LICENSE
No. 44167
STATE OF FLORIDA
PROFESSIONAL ENGINEER

P.E. SEAL, SIGNATURE/DATE

FLORIDA BUILDING CODE (HIGH VELOCITY HURRICANE ZONE)

©2010 TILTECO, INC

TILTECO INC.
TILLIT TESTING & ENGINEERING COMPANY
6355 N.W. 36th. St., Ste. 305, VIRGINIA GARDENS, Fl. 33166
Phone : (305)871-1530 . Fax : (305)871-1531
e-mail: tilteco@aol.com
EB-0006719
WALTER A. TILLIT Jr. P.E.
FLORIDA Lic. # 44167

HIGH IMPACT GREEN WORLD FIXED GLASS WALL SERIES 12000 LARGE MISSILE LAMINATED & INSULATED GLASS

GENERAL IMPACT GLASS & WINDOWS
The Clear Solution
290 WEST 78 ROAD
HIALEAH, FL. 33014
PHONE: (305) 558-8103
FAX: (305) 558-6665
www.generalimpact.com

REV. No.	DESCRIPTION	DATE	REV. No	DESCRIPTION	DATE
1	REFERENCE 5A WAS ADDED	12/16/10	3	–	–
2	–	–	4	–	–

M.C.V.
DRAWN BY

05/07/10
DATE

10-055
DRAWING No

HORIZONTAL SECTIONS AT INTERIOR VERTICAL MULLIONS PLUS JAMB MULLIONS AT CURVED GLASS WALL APPLICATIONS

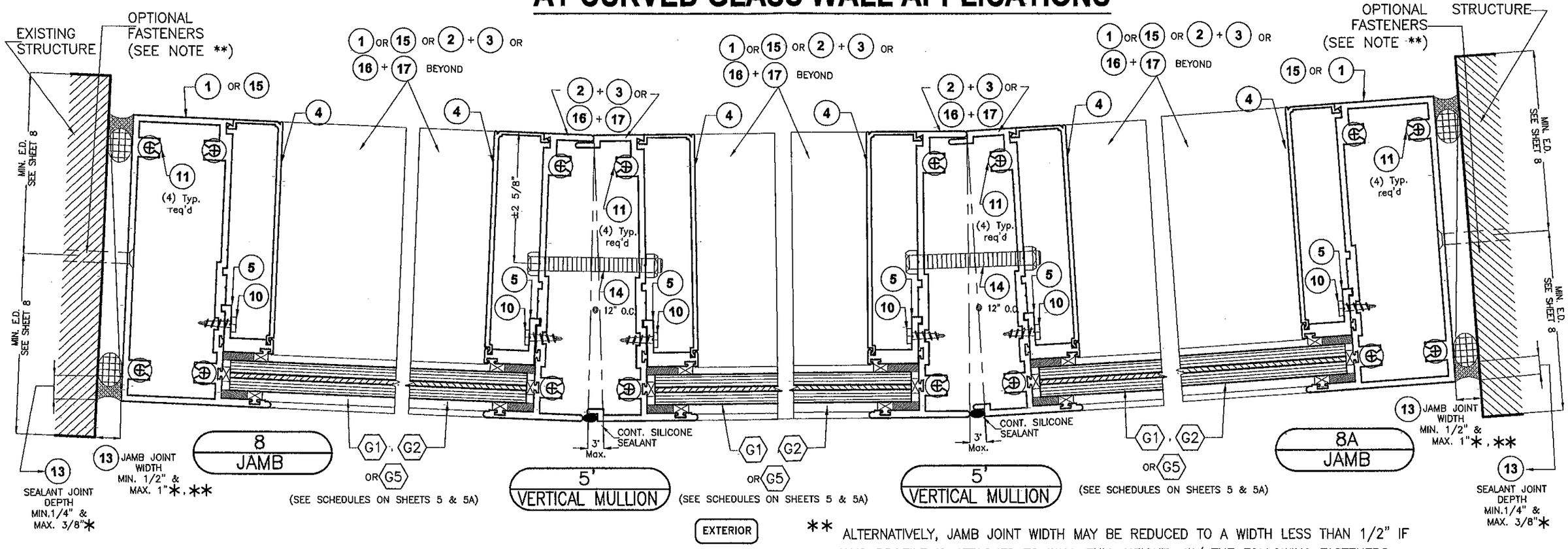

* NOTE: ABOVE INDICATED MAXIMUM AND MINIMUM VALUES FOR SPECIFIED SEALANT VERTICAL JOINT WIDTH AT JAMBS NOT CONNECTED TO WALL (FREE STANDING) HAVE BEEN DETERMINED ONLY TAKING INTO CONSIDERATION THE ACTUAL MOVEMENT OF GLASS WALL AT JAMBS DUE TO THERMAL, WIND AND ITS OWN CONSTRUCTION TOLERANCE, AND NOT PERFORMANCE FACTORS FROM THE SURROUNDING STRUCTURE.

** ALTERNATIVELY, JAMB JOINT WIDTH MAY BE REDUCED TO A WIDTH LESS THAN 1/2" IF JAMB PROFILE IS ATTACHED TO WALL FULL HEIGHT W/ THE FOLLOWING FASTENERS.

SUBSTRATE Δ	FASTENERS TYPES Δ		SPACING
	3/8" SHIM SPACE OR LESS	>3/8" , <1/2" SHIM SPACE	
POURED CONCRETE	FASTENER TYPE A	FASTENER TYPE B	6" O.C.
2500 psi GROUT FILLED ASTM C-90 CONCRETE BLOCK	FASTENER TYPE A	FASTENER TYPE B	6" O.C.
STEEL	FASTENER TYPE E	FASTENER TYPE E	6" O.C.
WOOD	FASTENER TYPES C & D	FASTENER TYPE D	5" O.C.

Δ CORRESPONDS TO FASTENERS TYPES AND SUBSTRATES CHARACTERISTICS (AS APPLICABLE) DESCRIBED ON SHEET 8.

Approved as complying with the Florida Building Code
Date JAN. 13, 2011
NOA# 10-0923.04
Miami Dade Product Control Division
By Manuel Perez

MIAMI-DADE COUNTY

WALTER A. TILLIT JR. LICENSE No. 44167 STATE OF FLORIDA PROFESSIONAL ENGINEER

P.E. SEAL/SIGNATURE/DATE

FLORIDA BUILDING CODE (HIGH VELOCITY HURRICANE ZONE)

©2010 TILTECO, INC

TILTECO INC.
TILLIT TESTING & ENGINEERING COMPANY
6355 N.W. 36th. St., Ste. 305, VIRGINIA GARDENS, Fl. 33166
Phone : (305)871-1530 . Fax : (305)871-1531
e-mail: tilteco@aol.com
EB-0006719
WALTER A. TILLIT Jr. P.E.
FLORIDA Lic. # 44167

HIGH IMPACT GREEN WORLD FIXED GLASS WALL -SERIES 12000 LARGE MISSILE LAMINATED & INSULATED GLASS

GENERAL IMPACT GLASS & WINDOWS
The Clear Solution
290 WEST 78 ROAD
HIALEAH, FL. 33014
PHONE: (305) 558-8103
FAX: (305) 558-6665
www.generalimpact.com

REV. No	DESCRIPTION	DATE	REV. No	DESCRIPTION	DATE
1	REFERENCE 5A WAS ADDED	12/16/10	3	–	–
2	–	–	4	–	–

M.C.V.
DRAWN BY

05/07/10
DATE

10-055
DRAWING No

HORIZONTAL SECTIONS AT JAMBS AT STRAIGHT GLASS WALL APPLICATIONS

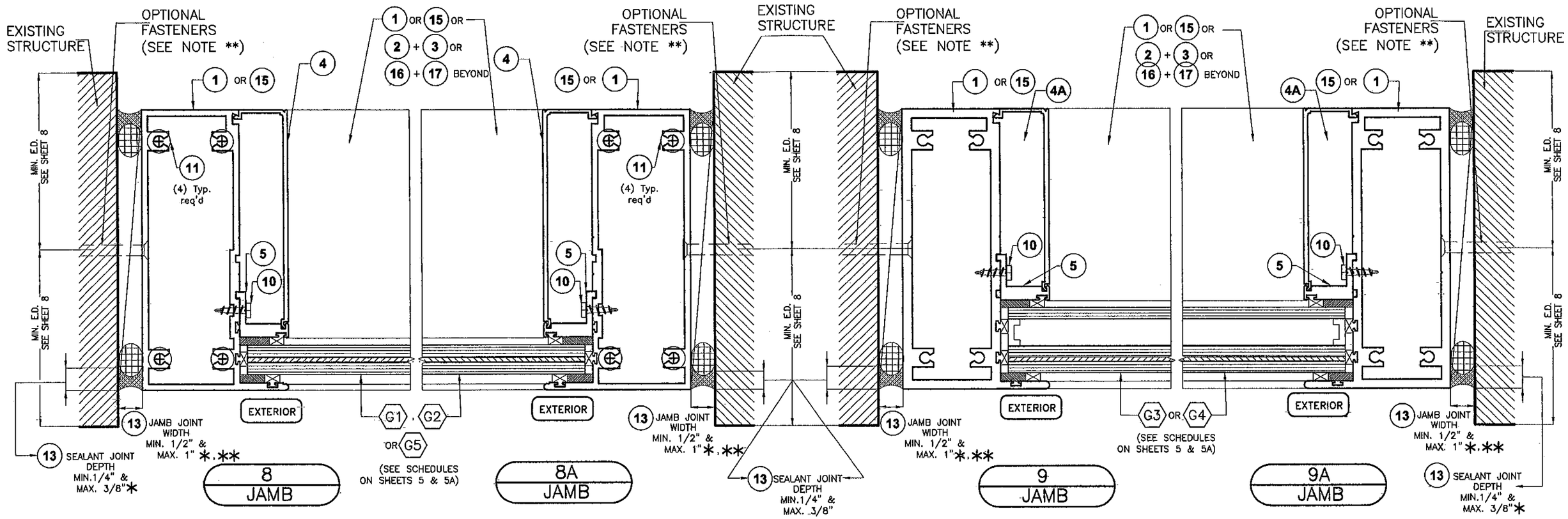

** ALTERNATIVELY, JAMB JOINT WIDTH MAY BE REDUCED TO A WIDTH LESS THAN 1/2" IF JAMB PROFILE IS ATTACHED TO WALL FULL HEIGHT W/ THE FOLLOWING FASTENERS.

SUBSTRATE Δ	FASTENERS TYPES Δ		SPACING
	3/8" SHIM SPACE OR LESS	>3/8" , <1/2" SHIM SPACE	
POURED CONCRETE	FASTENER TYPE A	FASTENER TYPE B	6" O.C.
2500 psi GROUT FILLED ASTM C-90 CONCRETE BLOCK	FASTENER TYPE A	FASTENER TYPE B	6" O.C.
STEEL	FASTENER TYPE E	FASTENER TYPE E	6" O.C.
WOOD	FASTENER TYPES C & D	FASTENER TYPE D	5" O.C.

Δ CORRESPONDS TO FASTENERS TYPES AND SUBSTRATES CHARACTERISTICS (AS APPLICABLE) DESCRIBED ON SHEET 8.

* NOTE: ABOVE INDICATED MAXIMUM AND MINIMUM VALUES FOR SPECIFIED SEALANT VERTICAL JOINT WIDTH AT JAMBS NOT CONNECTED TO WALL (FREE STANDING) HAVE BEEN DETERMINED ONLY TAKING INTO CONSIDERATION THE ACTUAL MOVEMENT OF GLASS WALL AT JAMBS DUE TO THERMAL, WIND AND ITS OWN CONSTRUCTION TOLERANCE, AND NOT PERFORMANCE FACTORS FROM THE SURROUNDING STRUCTURE.

Approved as complying with the Florida Building Code
Date: JAN. 13, 2011
NOA# 10-0923.04
Miami Dade Product Control Division
By Manuel Perez

MIAMI-DADE COUNTY

WALTER A. TILLIT JR. LICENSE No. 44167 STATE OF FLORIDA PROFESSIONAL ENGINEER

P.E. SEAL/SIGNATURE/DATE

FLORIDA BUILDING CODE (HIGH VELOCITY HURRICANE ZONE)

©2010 TILTECO, INC

TILTECO INC.
TILLIT TESTING & ENGINEERING COMPANY
6355 N.W. 36th. St., Ste. 305, VIRGINIA GARDENS, Fl. 33166
Phone : (305)871-1530 , Fax : (305)871-1531
e-mail: tilteco@aol.com
EB-0006719
WALTER A. TILLIT Jr. P.E.
FLORIDA Lic. # 44167

HIGH IMPACT GREEN WORLD FIXED GLASS WALL SERIES 12000 LARGE MISSILE LAMINATED & INSULATED GLASS

GENERAL IMPACT GLASS & WINDOWS
The Clear Solution
290 WEST 78 ROAD
HIALEAH, FL. 33014
PHONE: (305) 558-8103
FAX: (305) 558-6665
www.generalimpact.com

REV. No	DESCRIPTION	DATE	REV. No	DESCRIPTION	DATE
1	REFERENCE 5A WAS ADDED	12/16/10	3	-	-
2	-	-	4	-	-

M.C.V.
DRAWN BY

05/07/10
DATE

10-055
DRAWING No

ELEVATION FOR HIGH IMPACT GREEN WORLD FIXED GLASS WALL SERIES 12000 ADJACENT TO APPROVED DOOR (ON SEPARATE NOA)

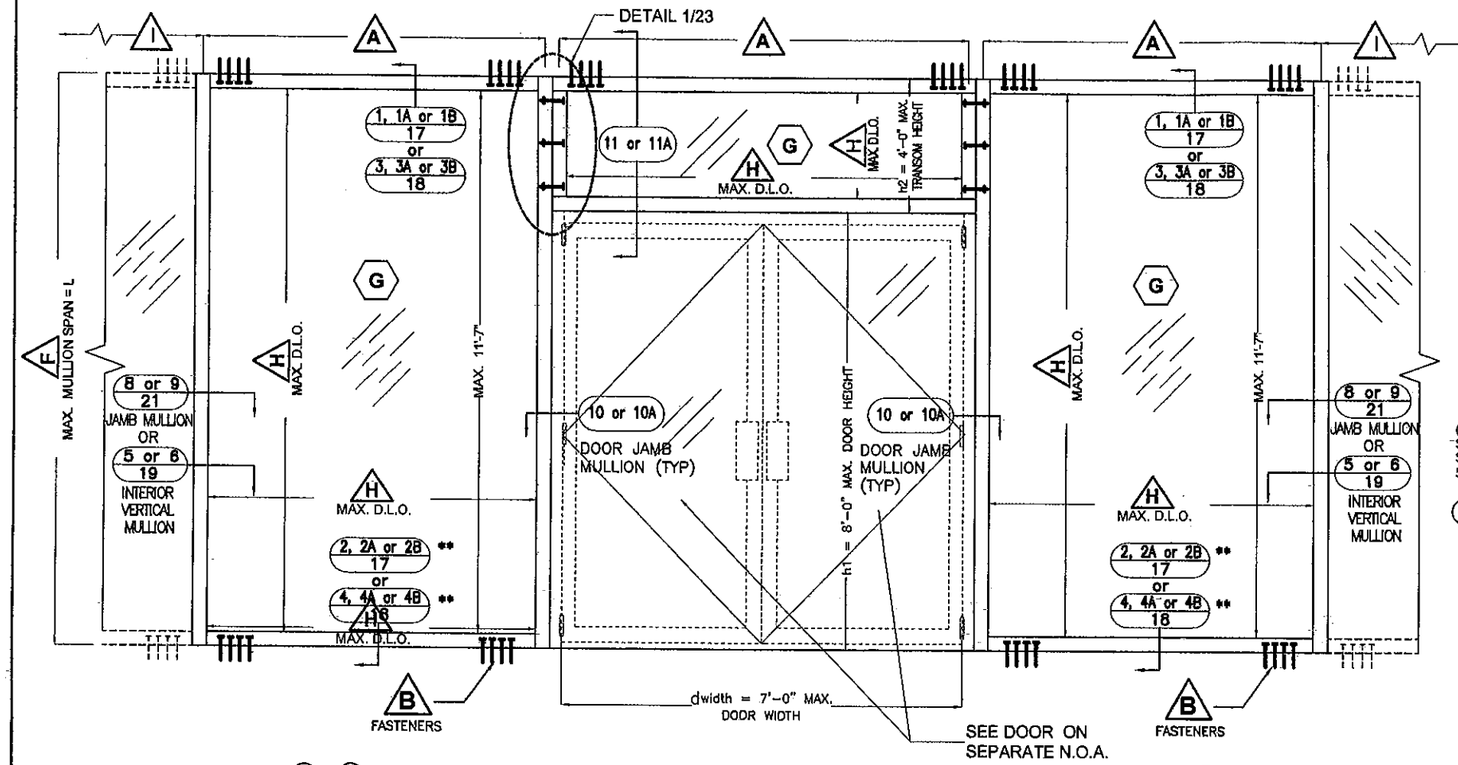

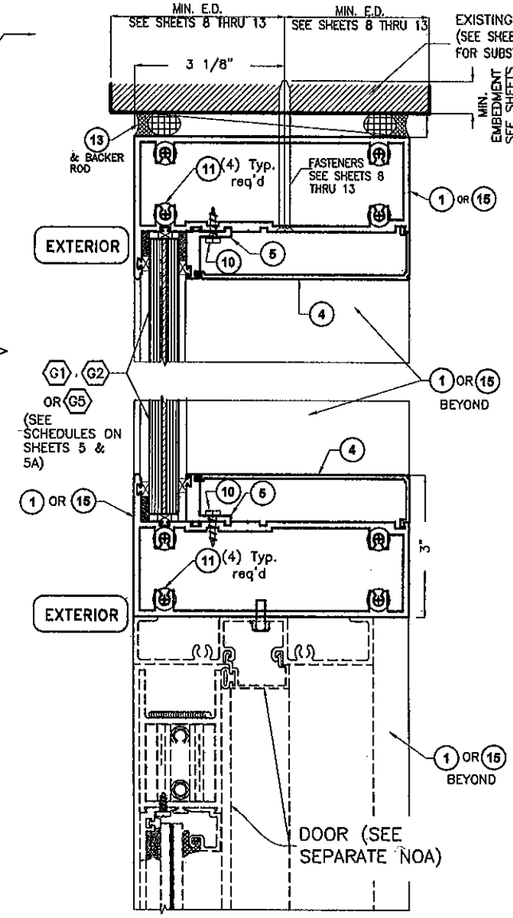

11
HORIZONTAL MULLION

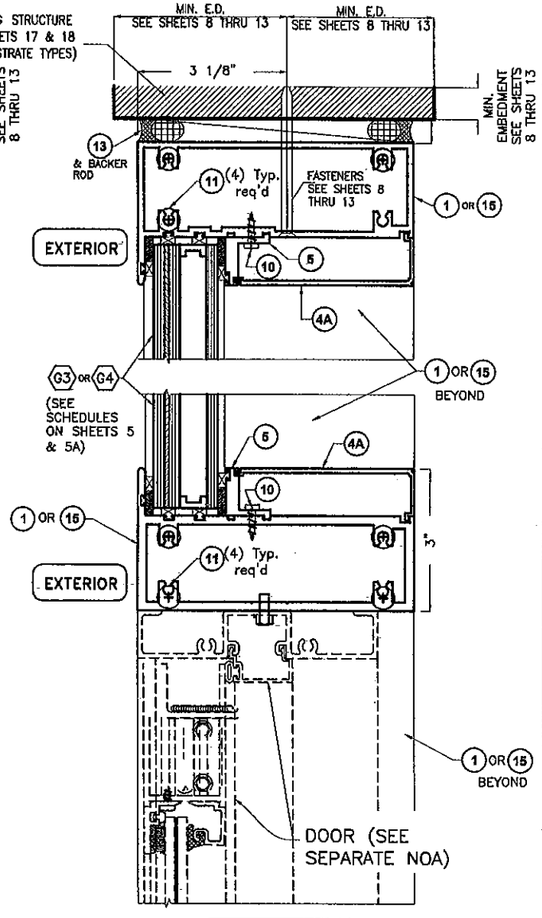

11A
HORIZONTAL MULLION

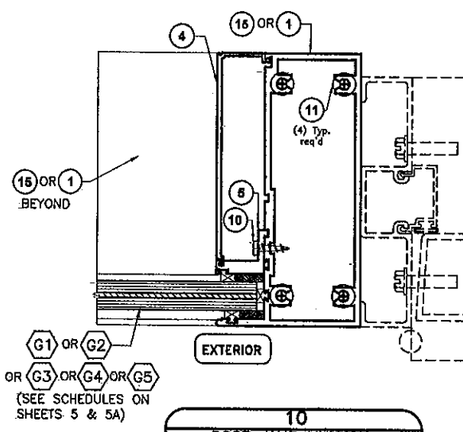

10
DOOR JAMB MULLION

DOOR UNDER SEPARATE N.O.A.

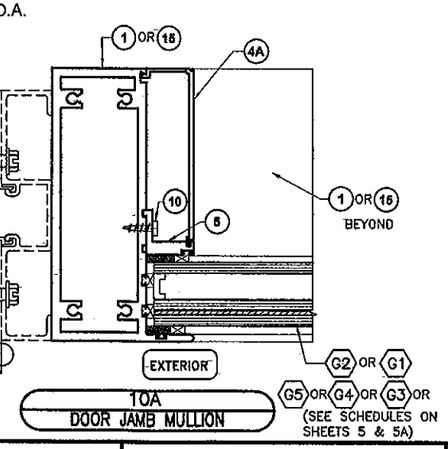

10A
DOOR JAMB MULLION

** FOR DOOR JAMB MULLION BOTTOM CONNECTION USE (4) 1/4"Ø ULTRACON ANCHORS WITH NO SHIM SPACE ALLOWED OR (4) 3/8"Ø WEDGE-BOLT ANCHORS WITH 3/8" MAX. SHIM SPACE. FOR TOP OF DOOR JAMB MULLION CONNECTIONS SEE SHEETS 8 THRU 13.

FOOT NOTES:

- (A) FOR MAXIMUM DOOR JAMB MULLION SPACING ON CENTERS SEE SHEET 23.
- (B) FOR HEAD AND SILL FASTENERS QUANTITY, TYPES AND SPECS SEE SHEETS 8 THRU 13.
- (F) FOR MAXIMUM VERTICAL MULLION SPAN SEE SHEET 23.
- (G) FOR GLAZING DETAILS SEE SHEET 3 AND FOR GLASS SCHEDULE SEE SHEETS 5 & 5A.
- (H) FOR MAXIMUM D.L.O. SEE SCHEDULE ON SHEETS 5 & 5A.
- (I) FOR MAXIMUM INTERIOR VERTICAL MULLION SPACING ON CENTERS SEE SHEETS 6 & 7.

Approved as complying with the Florida Building Code
Date JAN. 13, 2011
NOA# 10.0923.04
Miami Dade Product Control Division
By Maxwell Sera

MIAMI-DADE COUNTY

WALTER A. TILLIT JR. LICENSE No. 44167 STATE OF FLORIDA PROFESSIONAL ENGINEER

P.E. SEAL/SIGNATURE/DATE

FLORIDA BUILDING CODE (HIGH VELOCITY HURRICANE ZONE)

©2010 TILTECO, INC

TILTECO INC.
TILLIT TESTING & ENGINEERING COMPANY
6355 N.W. 36th. St., Ste. 305, VIRGINIA GARDENS, Fl. 33166
Phone : (305)871-1530 . Fax : (305)871-1531
e-mail: tilteco@aol.com
EB-0006719
WALTER A. TILLIT Jr. P.E.
FLORIDA Lic. # 44167

HIGH IMPACT GREEN WORLD FIXED GLASS WALL SERIES 12000 LARGE MISSILE LAMINATED & INSULATED GLASS

GENERAL IMPACT GLASS & WINDOWS
The Clear Solution
290 WEST 78 ROAD
HIALEAH, FL. 33014
PHONE: (305) 558-8103
FAX: (305) 558-6665
www.generalimpact.com

REV. No	DESCRIPTION	DATE	REV. No	DESCRIPTION	DATE
1	REFERENCE 8A WAS ADDED	12/16/10	3	–	–
2	–	–	4	–	–

M.C.V.
DRAWN BY

05/07/10
DATE

10-055
DRAWING No

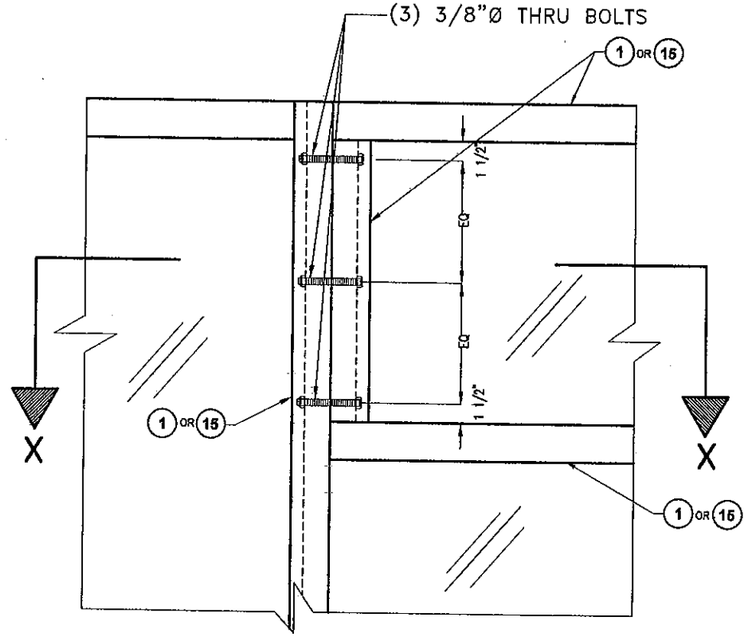

ELEVATION DETAIL 1

SCALE: 1"=1'-0"

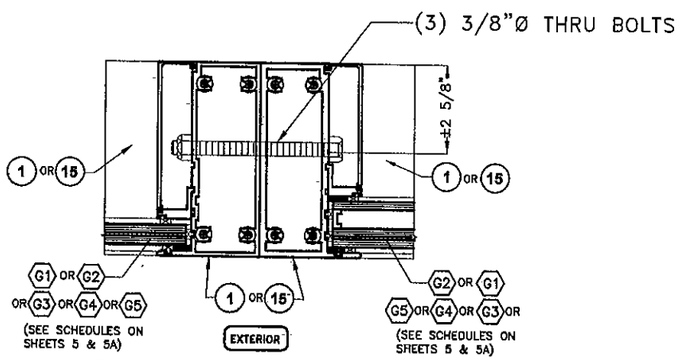

SECTION X-X

SCALE: 3/8"=1'-0"

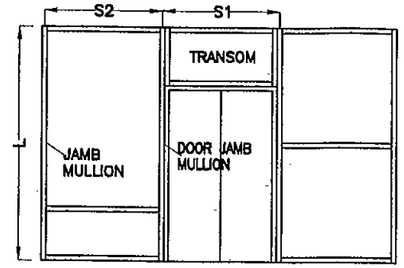

ELEVATION W/ DOOR JAMB MULLION

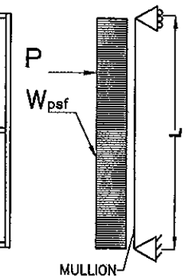

SIDE VIEW DOOR JAMB MULLION

"L" = MAXIMUM DOOR JAMB MULLION SPAN

DOOR JAMB MULLION EFFECTIVE SPACING: "b" = $\frac{S1+S2}{2}$

* MAXIMUM DESIGN PRESSURE RATING FOR DOOR JAMB MULLION WILL AUTOMATICALLY QUALIFY DESIGN PRESSURE RATINGS FOR JAMBS MULLIONS FOR ANY GIVEN MULLION SPACING & PRESSURE RATING.

J-1	CASE 1: DOOR JAMB MULLION (1)+(4)+(5)	Ix = 13.075 in4 Sx = 4.351 in3
WATER INFILTRATION IS 19.5 psf		IN TERMS OF ALUM.

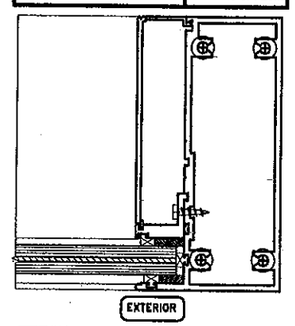

J-2	CASE 2: DOOR JAMB MULLION (1)+(4A)+(5)	Ix = 12.421 in4 Sx = 4.277 in3
WATER INFILTRATION IS 19.5 psf		IN TERMS OF ALUM.

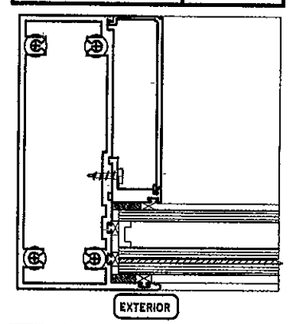

J-1A	CASE 3: DOOR JAMB MULLION (15)+(4)+(5)	Ix = 16.084 in4 Sx = 5.415 in3
WATER INFILTRATION IS 19.5 psf		IN TERMS OF ALUM.

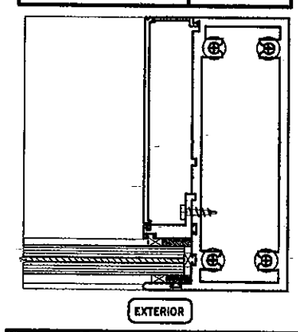

J-2A	CASE 4: DOOR JAMB MULLION (15)+(4A)+(5)	Ix = 15.300 in4 Sx = 5.283 in3
WATER INFILTRATION IS 19.5 psf		IN TERMS OF ALUM.

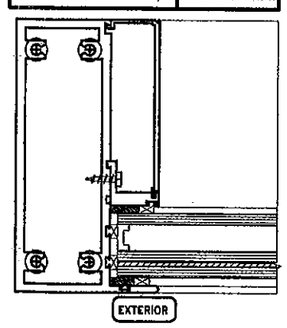

** MAXIMUM DOOR JAMB MULLION SPAN "L"(FT) SCHEDULE FOR A GIVEN DESIGN PRESSURE RATING "W" (psf), DOOR JAMB MULLION EFFECTIVE SPACING "b"

MAXIMUM DESIGN PRESSURE RATING "W" (psf)	MAX. EFFECTIVE SPACING "b" (Ft-In)	1/8"or 3/16" THICK INTERIOR DOOR JAMB MULLION SPAN "L"(FT) Laminated/Insulated Glass CASES: 1,2,3,4 J-1, J2, J-1A & J-2A
± 40.0	3 '- 6 "	12 '- 0 "
	4 '- 0 "	12 '- 0 "
	4 '- 6 "	12 '- 0 "
	5 '- 0 "	12 '- 0 "
	5 '- 6 "	11 '- 9 "
	6 '- 0 "	11 '- 3 "
	6 '- 6 "	10 '- 10 "
	7 '- 0 "	10 '- 5 "
± 45.0	3 '- 6 "	12 '- 0 "
	4 '- 0 "	12 '- 0 "
	4 '- 6 "	12 '- 0 "
	5 '- 0 "	11 '- 7 "
	5 '- 6 "	11 '- 1 "
	6 '- 0 "	10 '- 7 "
	6 '- 6 "	10 '- 10 "
	7 '- 0 "	9 '- 10 "
± 50.0	3 '- 6 "	12 '- 0 "
	4 '- 0 "	12 '- 0 "
	4 '- 6 "	11 '- 7 "
	5 '- 0 "	11 '- 0 "
	5 '- 6 "	10 '- 6 "
	6 '- 0 "	10 '- 1 "
	6 '- 6 "	9 '- 8 "
	7 '- 0 "	9 '- 4 "
± 55.0	3 '- 6 "	12 '- 0 "
	4 '- 0 "	11 '- 9 "
	4 '- 6 "	11 '- 1 "
	5 '- 0 "	10 '- 6 "
	5 '- 6 "	10 '- 0 "
	6 '- 0 "	9 '- 7 "
	6 '- 6 "	9 '- 3 "
	7 '- 0 "	8 '- 11 "
± 60.0	3 '- 6 "	12 '- 0 "
	4 '- 0 "	11 '- 3 "
	4 '- 6 "	10 '- 7 "
	5 '- 0 "	10 '- 1 "
	5 '- 6 "	9 '- 7 "
	6 '- 0 "	9 '- 2 "
	6 '- 6 "	8 '- 10 "
	7 '- 0 "	8 '- 6 "
± 65.0	3 '- 6 "	11 '- 7 "
	4 '- 0 "	10 '- 10 "
	4 '- 6 "	10 '- 2 "
	5 '- 0 "	9 '- 8 "
	5 '- 6 "	9 '- 3 "
	6 '- 0 "	8 '- 10 "
	8 '- 6 "	8 '- 5 "
	7 '- 0 "	7 '- 10 "

** MAXIMUM DOOR JAMB MULLION SPAN "L"(FT) SCHEDULE FOR A GIVEN DESIGN PRESSURE RATING "W" (psf) & DOOR GIVEN JAMB MULLION EFFECTIVE SPACING "b" (CONTINUED)

MAXIMUM DESIGN PRESSURE RATING "W" (psf)	MAX. EFFECTIVE SPACING "b" (Ft-In)	1/8"or 3/16" THICK INTERIOR DOOR JAMB MULLION SPAN "L"(FT) Laminated/Insulated Glass CASES: 1,2,3,4 J-1, J2, J-1A & J-2A
± 70.0	3 '- 6 "	11 '- 2 "
	4 '- 0 "	10 '- 5 "
	4 '- 6 "	9 '- 10 "
	5 '- 0 "	9 '- 4 "
	5 '- 6 "	8 '- 11 "
	6 '- 0 "	8 '- 6 "
	6 '- 6 "	7 '- 10 "
	7 '- 0 "	7 '- 3 "
± 75.0	3 '- 6 "	10 '- 9 "
	4 '- 0 "	10 '- 1 "
	4 '- 6 "	9 '- 6 "
	5 '- 0 "	9 '- 0 "
	5 '- 6 "	8 '- 7 "
	6 '- 0 "	7 '- 11 "
	6 '- 6 "	7 '- 4 "
	7 '- 0 "	6 '- 9 "
± 80.0	3 '- 6 "	10 '- 5 "
	4 '- 0 "	9 '- 9 "
	4 '- 6 "	9 '- 2 "
	5 '- 0 "	6 '- 9 "
	5 '- 6 "	8 '- 1 "
	6 '- 0 "	7 '- 5 "
	6 '- 6 "	8 '- 10 "
	7 '- 0 "	6 '- 4 "
± 85.0	3 '- 6 "	10 '- 1 "
	4 '- 0 "	9 '- 5 "
	4 '- 6 "	8 '- 11 "
	5 '- 0 "	8 '- 5 "
	5 '- 6 "	7 '- 7 "
	6 '- 0 "	7 '- 0 "
	6 '- 6 "	6 '- 5 "
	7 '- 0 "	6 '- 0 "

** FOR DOOR JAMB MULLION BOTTOM CONNECTION USE (4) 1/4"Ø ULTRACON ANCHORS WITH NO SHIM SPACE ALLOWED OR (4) 3/8"Ø WEDGE-BOLT ANCHORS WITH 3/8" MAX. SHIM SPACE. FOR TOP OF DOOR JAMB MULLION CONNECTIONS SEE SHEETS 8 THRU 13.

CASES DEFINITIONS

CASE 1 :	J-1	JAMB MULLION: 1/8" THICK W/ LAMINATED GLASS (SEE DET. 8/ 21 & 10/22)
CASE 2 :	J-2	JAMB MULLION: 1/8" THICK W/ INSULATED GLASS (SEE DET. 8A / 21 & 10/22)
CASE 3 :	J-1A	JAMB MULLION: 3/16" THICK W/ LAMINATED GLASS (SEE DET. 9/ 21 & 10A/22)
CASE 4 :	J-2A	JAMB MULLION: 3/16" THICK W/ INSULATED GLASS (SEE DET. 9A/21 & 10A/22)

Approved as complying with the Florida Building Code
Date JAN. 13, 2011
NOA# 10-0923.04
Miami Dade Product Control Division
By Manuel Perez

MIAMI-DADE COUNTY

WALTER A. TILLIT JR.
LICENSE
No. 44167
STATE OF FLORIDA
PROFESSIONAL ENGINEER

P.E. SEAL/SIGNATURE/DATE

FLORIDA BUILDING CODE (HIGH VELOCITY HURRICANE ZONE)

©2010 TILTECO, INC

TILTECO INC.
TILLIT TESTING & ENGINEERING COMPANY
6355 N.W. 36th. St., Ste. 305, VIRGINIA GARDENS, FL. 33166
Phone : (305)871-1530 . Fax : (305)871-1531
e-mail: tilteco@aol.com
EB-0006719
WALTER A. TILLIT Jr. P.E.
FLORIDA Lic. # 44167

HIGH IMPACT GREEN WORLD FIXED GLASS WALL SERIES 12000 LARGE MISSILE LAMINATED & INSULATED GLASS

GENERAL IMPACT GLASS & WINDOWS
The Clear Solution
290 WEST 78 ROAD
HIALEAH, FL. 33014
PHONE: (305) 558-8103
FAX: (305) 558-6665
www.generalimpact.com

REV. No	DESCRIPTION	DATE	REV. No	DESCRIPTION	DATE
1	REFERENCE 5A WAS ADDED	12/16/10	3	-	-
2	-	-	4	-	-

M.C.V. DRAWN-BY

05/07/10 DATE

10-055 DRAWING No

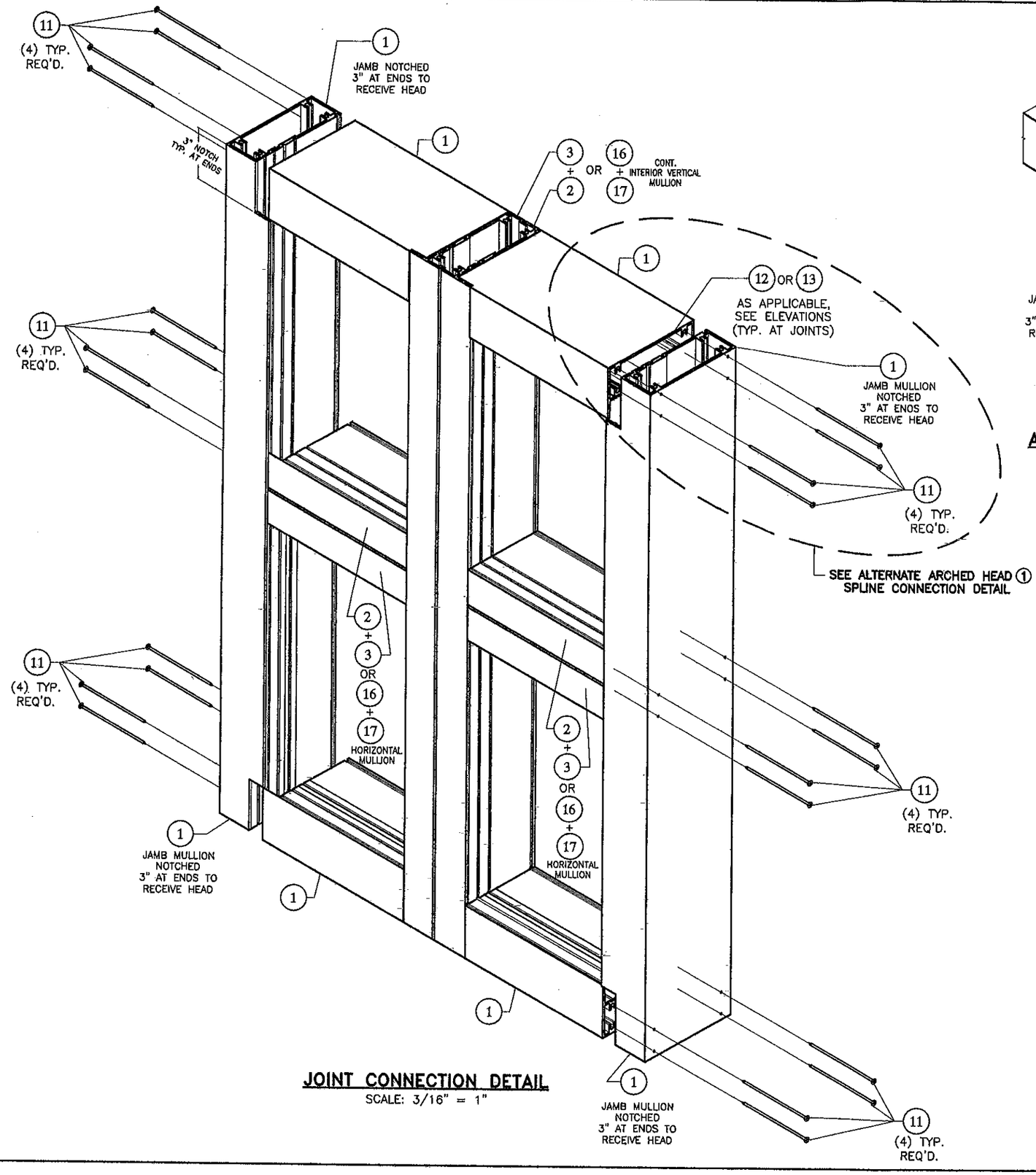

JOINT CONNECTION DETAIL

SCALE: 3/16" = 1"

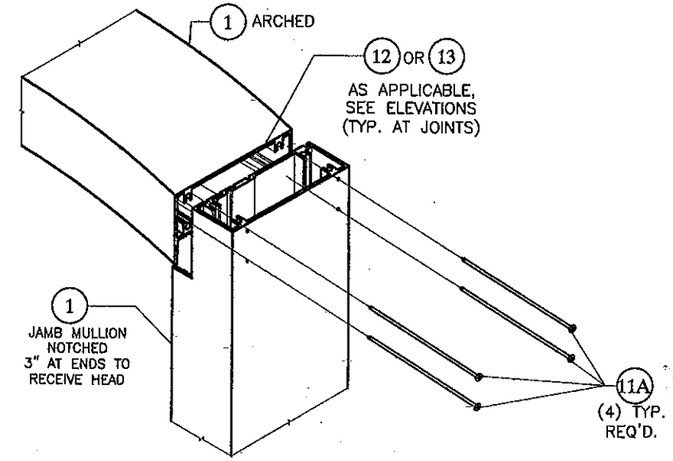

ARCHED HEAD 1 SPLINE CONNECTION DETAIL

SCALE: 3/16" = 1"

Approved as complying with the Florida Building Code
Date JAN. 13, 2011
NOA# 10-0923.04
Miami Dade Product Control Division
By Manuel Perez

MIAMI-DADE COUNTY

WALTER A. TILLIT JR.
LICENSE
No. 44167
STATE OF FLORIDA
PROFESSIONAL ENGINEER

P.E. SEAL/SIGNATURE/DATE

FLORIDA BUILDING CODE (High Velocity Hurricane Zone)

©2010 TILTECO INC.

TILTECO INC.
TILLIT TESTING & ENGINEERING COMPANY
6355 N.W. 36th. St., Ste. 305, VIRGINIA GARDENS, Fl 33166
Phone : (305)871-1530 . Fax : (305)871-1531
e-mail: tilteco@aol.com
EB-0006719
WALTER A. TILLIT Jr., P.E.
FLORIDA Lic. 44167

HIGH IMPACT GREEN WORLD FIXED GLASS WALL SERIES
12000 LARGE MISSILE LAMINATED & INSULATED GLASS

GENERAL IMPACT GLASS & WINDOWS
The Clear Solution
290 WEST 78 ROAD
HIALEAH, FL. 33014
PHONE: (305) 558-8103
FAX: (305) 558-6665
www.generalimpact.com

REV. NO	DESCRIPTION	DATE	REV. No	DESCRIPTION	DATE
1	-	-	3	-	-
2	-	-	4	-	-

M.C.V.
DRAWN BY

05/07/10
DATE

10-055
DRAWING No

SHEET 24 OF 24