MIAMI-DADE COUNTY

BUILDING CODE COMPLIANCE OFFICE (BCCO)
PRODUCT CONTROL DIVISION

MIAMI-DADE COUNTY, FLORIDA
METRO-DADE FLAGLER BUILDING
140 WEST FLAGLER STREET, SUITE 1603
MIAMI, FLORIDA 33130-1563
(305) 375-2901 FAX (305) 375-2908

NOTICE OF ACCEPTANCE (NOA)

Lomanco, Inc.
2101 W. Main Street
Jacksonville, AR 72076

SCOPE:

This NOA is being issued under the applicable rules and regulations governing the use of construction materials. The documentation submitted has been reviewed by Miami-Dade County Product Control Division and accepted by the Board of Rules and Appeals (BORA) to be used in Miami Dade County and other areas where allowed by the Authority Having Jurisdiction (AHJ).

This NOA shall not be valid after the expiration date stated below. The Miami-Dade County Product Control Division (In Miami Dade County) and/or the AHJ (in areas other than Miami Dade County) reserve the right to have this product or material tested for quality assurance purposes. If this product or material fails to perform in the accepted manner, the manufacturer will incur the expense of such testing and the AHJ may immediately revoke, modify, or suspend the use of such product or material within their jurisdiction. BORA reserves the right to revoke this acceptance, if it is determined by Miami-Dade County Product Control Division that this product or material fails to meet the requirements of the applicable building code.

This product is approved as described herein, and has been designed to comply with the Florida Building Code, including the High Velocity Hurricane Zone of the Florida Building Code.

DESCRIPTION: BIB-14/ BEB-14 WhirlyBird® Wind Turbine

LABELING: Each unit shall bear a permanent label with the manufacturer's name or logo, city, state and following statement: "Miami-Dade County Product Control Approved", unless otherwise noted herein.

RENEWAL of this NOA shall be considered after a renewal application has been filed and there has been no change in the applicable building code negatively affecting the performance of this product.

TERMINATION of this NOA will occur after the expiration date or if there has been a revision or change in the materials, use, and/or manufacture of the product or process. Misuse of this NOA as an endorsement of any product, for sales, advertising or any other purposes shall automatically terminate this NOA. Failure to comply with any section of this NOA shall be cause for termination and removal of NOA.

ADVERTISEMENT: The NOA number preceded by the words Miami-Dade County, Florida, and followed by the expiration date may be displayed in advertising literature. If any portion of the NOA is displayed, then it shall be done in its entirety.

INSPECTION: A copy of this entire NOA shall be provided to the user by the manufacturer or its distributors and shall be available for inspection at the job site at the request of the Building Official.

This renews NOA # 05-0823.06 consists of pages 1 through 5.
The submitted documentation was reviewed by Alex Tigera.

MIAMI-DADE COUNTY APPROVED

ROOFING COMPONENT APPROVAL

Category:	Roofing
Sub-Category:	Ventilation
Type:	Turbine
Materials	Aluminum
Deck	Wood

TRADE NAMES OF PRODUCTS MANUFACTURED OR LABELED BY APPLICANT:

Product	Dimensions	Test Specification	Product Description
BIB-14/ BEB-14 WhirlyBird®	22" wide at base 17-1/8" high Base 0.0253" thick Elbow & Dome 0.032" thick Vanes 0.019" thick Rotor Band 0.0305" thick Extrusions 0.125" thick	TAS 100(A)	14" diameter operning turbine ventilation system.

MANUFACTURING LOCATION

1 Jacksonville, AR

EVIDENCE SUBMITTED

Test Agency	Test Identifier	Description	Date
PRI Asphalt Technologies, Inc.	LOM-019-02-01	TAS 100(A)	09/01/10

APPROVED ASSEMBLY:

System Type A: Mechanical attachment of turbine vent over composite shingles

Cutout: At chosen location (see Lomanco instructions for proper placement) and centered between two roof rafters, cut a 14" diameter hole through shingles and sheathing boards. Seal around top and sides of hole with approved roofing cement.

Installation Determine roof pitch in compliance with Lomanco instructions and align roof pitch number on elbow with indicator line on flashing. Place three short screws through holes that line up with pre-drilled holes in base.

Place mounting base unit flat on the shingles on its flashing, and coat underside of base flashing with roofing cement In its pitch-adjusted position, carefully slide upper half of flashing up roof beneath shingles previously rolled back until base is centered over cutout. Rolling back the shingles where necessary, and rechecking pitch setting for vertical alignment, secure the base unit to the roof deck with a minimum of fourteen ring shank roofing nails, equally spaced, approximately ¾" from edge of base per detail drawing "Base". Nails shall be of sufficient length to penetrate through roof sheathing a minimum of ½". Apply roofing cement to underside of shingles overlapping flashing, and press them down onto the flashing.

Rotate top of elbow to level position by turning counterclockwise. Place locking clamp across seam and tighten as shown in Lomanco instructions with approved sheet metal screw. Seal all seams and nails with approved roofing cement.

Position whirlybird on the base. Line up the pre-drilled holes in the brackets and base and fasten with approved long sheet metal screws.

After installation, verify that whirlybird turns freely. If necessary, minor adjustment may be made by gently prying lowest point of turbine upward to remove any wobble.

Net Free Area: Refer to manufacturers published literature.

Slope: Minimum 2" on 12"

LIMITATIONS:

1. Refer to applicable building codes for required ventilation.
2. This acceptance is for installations over asphaltic shingle or low slope roofing.
3. BIB-14/BEB-14 Whirlybird® turbine roof ventilators shall not be installed on roof mean heights greater than 33 ft

DETAIL DRAWINGS

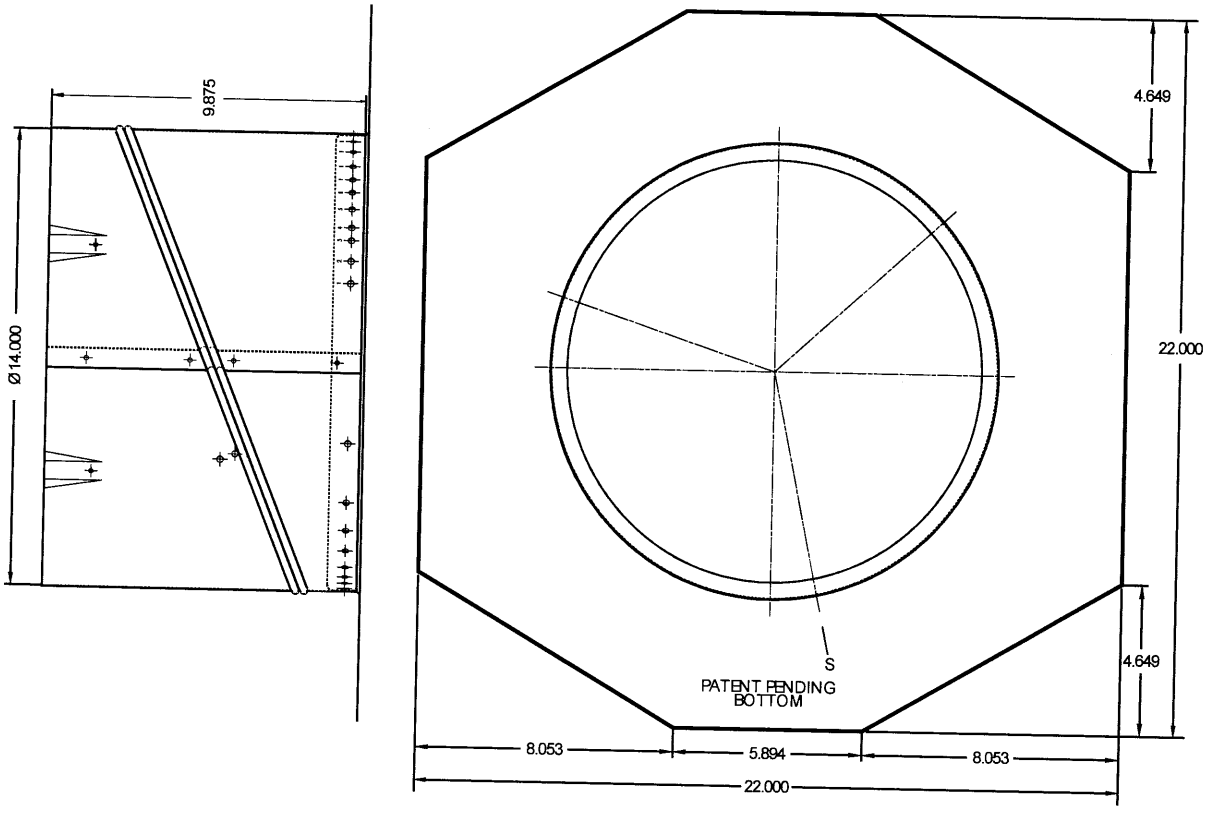

Base

DETAILED DRAWINGS (CONTINUED)

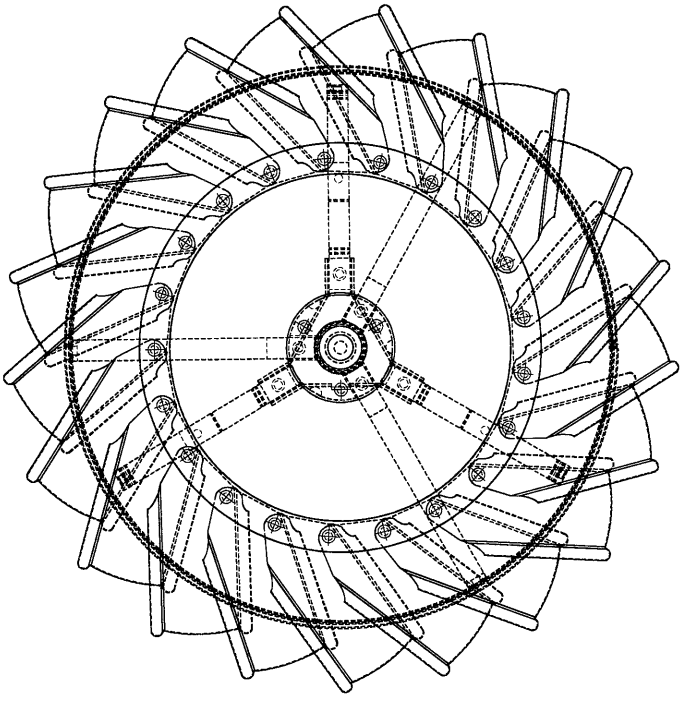

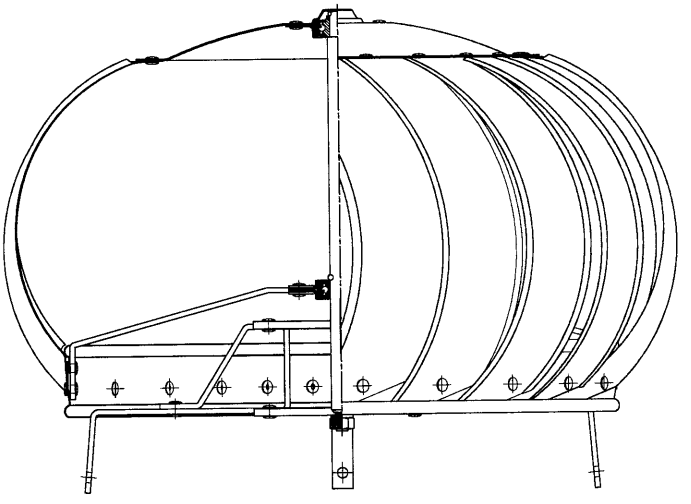

BIB-14, BEB-14

END OF THIS ACCEPTANCE