MIAMI-DADE COUNTY
BUILDING AND NEIGHBORHOOD COMPLIANCE DEPARTMENT (BNC)
BOARD AND CODE ADMINISTRATION DIVISION

MIAMI-DADE COUNTY
PRODUCT CONTROL SECTION
11805 SW 26 Street, Room 208
Miami, Florida 33175-2474
T (786) 315-2590 F (786) 315-2599
www.miamidade.gov/building

NOTICE OF ACCEPTANCE (NOA)

Butler Manufacturing,
A Division of BlueScope Buildings North America, Inc.
13500 Botts Road
Grandview, MO 64030

SCOPE:
This NOA is being issued under the applicable rules and regulations governing the use of construction materials. The documentation submitted has been reviewed by Miami-Dade County Product Control Section and accepted by the Board of Rules and Appeals (BORA) to be used in Miami Dade County and other areas where allowed by the Authority Having Jurisdiction (AHJ).

This NOA shall not be valid after the expiration date stated below. The Miami-Dade County Product Control Section (In Miami Dade County) and/or the AHJ (in areas other than Miami Dade County) reserve the right to have this product or material tested for quality assurance purposes. If this product or material fails to perform in the accepted manner, the manufacturer will incur the expense of such testing and the AHJ may immediately revoke, modify, or suspend the use of such product or material within their jurisdiction. BORA reserves the right to revoke this acceptance, if it is determined by Miami-Dade County Product Control Section that this product or material fails to meet the requirements of the applicable building code.

This product is approved as described herein, and has been designed to comply with the High Velocity Hurricane Zone of the Florida Building Code.

DESCRIPTION: Thermawall and Texturewall Wall Panel

APPROVAL DOCUMENT: Drawing No. C1409, titled " Butler Thermawall and Texturewall ", sheets 1 and 2 of 2, prepared by Bala Sockalingam, P.E., dated August 19, 2005, last revision #B dated September 15, 2010, signed and sealed by Russell L. Benton, P.E., bearing the Miami-Dade County Product Control Revision stamp with the Notice of Acceptance number and the approval date by the Miami-Dade County Product Control Section.

MISSILE IMPACT RATING: Large and Small Missile Impact Resistant

LABELING: Each panel shall bear a permanent label with the manufacturer's name or logo, city, state and the following statement: "Miami-Dade County Product Control Approved", unless otherwise noted herein.

RENEWAL of this NOA shall be considered after a renewal application has been filed and there has been no change in the applicable building code negatively affecting the performance of this product.

TERMINATION of this NOA will occur after the expiration date or if there has been a revision or change in the materials, use, and/or manufacture of the product or process. Misuse of this NOA as an endorsement of any product, for sales, advertising or any other purposes shall automatically terminate this NOA. Failure to comply with any section of this NOA shall be cause for termination and removal of NOA.

ADVERTISEMENT: The NOA number preceded by the words Miami-Dade County, Florida, and followed by the expiration date may be displayed in advertising literature. If any portion of the NOA is displayed, then it shall be done in its entirety.

INSPECTION: A copy of this entire NOA shall be provided to the user by the manufacturer or its distributors and shall be available for inspection at the job site at the request of the Building Official.
This NOA **revises NOA # 08-0225.09** and consists of this page 1, evidence submitted pages E-1 & E-2 as well as approval document mentioned above.
The submitted documentation was reviewed by **Helmy A. Makar, P.E., M.S.**

MIAMI-DADE COUNTY APPROVED

Helmy A. Makar
02/17/2011

NOA No. 10-0928.09
Expiration Date: 03/06/2013
Approval Date: 02/17/2011

Butler Manufacturing,
A Division of BlueScope Buildings North America, Inc.

NOTICE OF ACCEPTANCE: EVIDENCE SUBMITTED

1. EVIDENCE SUBMITTED UNDER PREVIOUS APPROVAL #04-0112.01

A. DRAWINGS

1. *Drawing No. 1180, titled " Thermawall Wall Panel ", sheets 1 and 2 of 2, prepared by W.W. Schaefer Engineering & Consulting, P.A., dated March 23, 2004, signed and sealed by John E. Lamb, P.E.*

B. TESTS

1. *See Private Labeler/Manufacturer Agreement with Holder of Approval Metl-Span NOA #02-1107.01.*

C. CALCULATIONS

1. *See Private Labeler/Manufacturer Agreement with Holder of Approval Metl-Span NOA #02-1107.01.*

D. QUALITY ASSURANCE

1. *By Miami-Dade County Building Code Compliance Office.*

E. MATERIAL CERTIFICATIONS

1. *See Private Labeler/Manufacturer Agreement with Holder of Approval Metl-Span NOA #02-1107.01.*

F. OTHERS

1. *Private Labeling Agreement with Metl-Span I, Ltd. NOA # 02-1107.01*

2. EVIDENCE SUBMITTED UNDER PREVIOUS APPROVAL #08-0255.09

A. DRAWINGS

1. *Drawing No. C1409, titled "Butler Thermawall and Texturewall", sheets 1 and 2 of 2, prepared by Bala Sockalingam, P.E., dated August 19, 2005, last revision #A dated April 17, 2006, signed and sealed by Russell L. Benton, P.E. on March 28, 2008.*

B. TESTS

1. *See Private Labeler/Manufacturer Agreement with Holder of Approval Metl-Span NOA #08-0206.08.*

C. CALCULATIONS

1. *See Private Labeler/Manufacturer Agreement with Holder of Approval Metl-Span NOA #08-0206.08.*

Helmy A. Makar, P.E., M.S.
BNC, Product Control Unit Supervisor
NOA No. 10-0928.09
Expiration Date: 03/06/2013
Approval Date: 02/17/2011

NOTICE OF ACCEPTANCE: EVIDENCE SUBMITTED

D. QUALITY ASSURANCE

1. *By Miami-Dade County Building Code Compliance Office.*

E. MATERIAL CERTIFICATIONS

1. *See Private Labeler/Manufacturer Agreement with Holder of Approval Metl-Span NOA #08-0206.08.*

F. OTHERS

1. *Private Labeling Agreement with Metl-Span I, Ltd. NOA # 08-0206.08.*

3. NEW EVIDENCE SUBMITTED

A. DRAWINGS

1. *Drawing No. C1409, titled " Butler Thermawall and Texturewall ", sheets 1 and 2 of 2, prepared by Bala Sockalingam, P.E., dated August 19, 2005, last revision #B dated September 15, 2010, signed and sealed by Russell L. Benton, P.E.*

B. TESTS

1. *See Private Labeler/Manufacturer Agreement with Holder of Approval Metl-Span NOA #08-0206.08.*

C. CALCULATIONS

1. *See Private Labeler/Manufacturer Agreement with Holder of Approval Metl-Span NOA #08-0206.08.*

D. QUALITY ASSURANCE

1. *By Miami-Dade County Building and Neighborhood Compliance Department.*

E. MATERIAL CERTIFICATIONS

1. *See Private Labeler/Manufacturer Agreement with Holder of Approval Metl-Span NOA #08-0206.08.*

F. OTHERS

1. *Private Labeling Agreement with Metl-Span I, Ltd. NOA # 08-0206.08.*

Helmy A. Makar, P.E., M.S.
BNC, Product Control Unit Supervisor
NOA No. 10-0928.09
Expiration Date: 03/06/2013
Approval Date: 02/17/2011

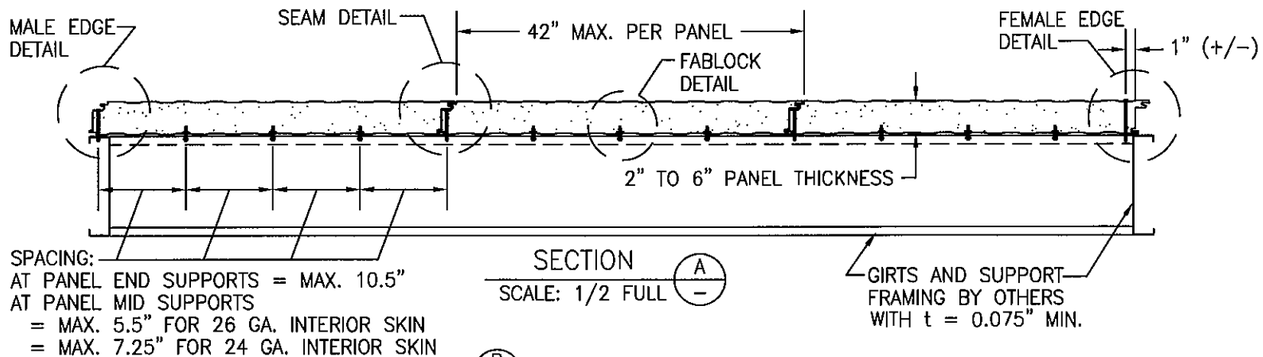

SECTION A
SCALE: 1/2 FULL

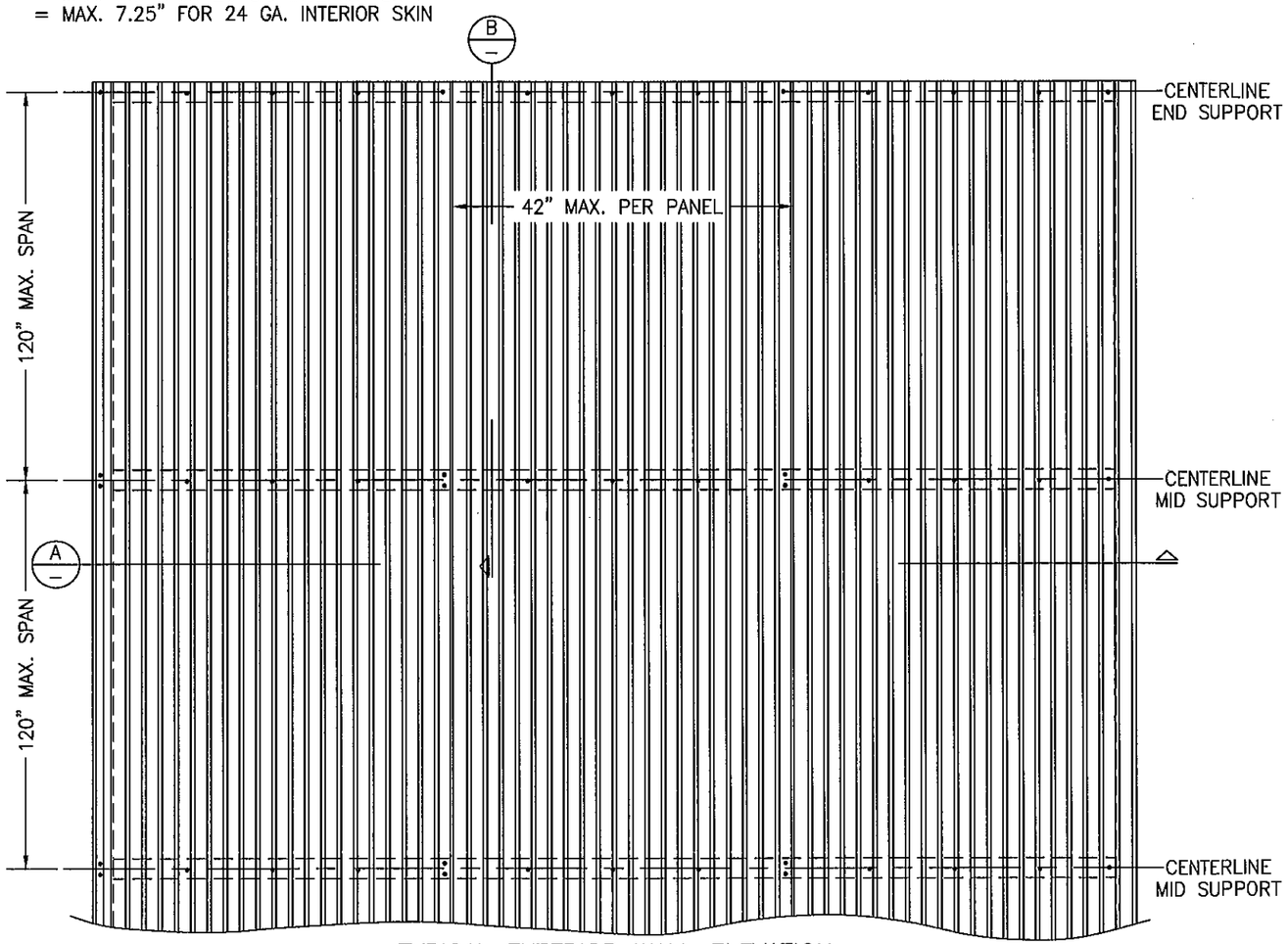

TYPICAL EXTERIOR WALL ELEVATION

PRODUCT APPROVAL IS LIMITED TO THE WALL PANEL & ITS CONNECTING CLIPS. THE STRUCTURAL ADEQUACY OF ALL OTHER STRUCTURAL ITEMS (BEAMS, COLUMNS, PURLINS, FACIA SUPPORTS, CONNECTIONS OF STRUCTURE, ETC. SHALL BE VERIFIED BY THE STRUCTURAL PLANS EXAMINER OF THE CORRESPONDING BUILDING DEPARTMENT. THE WALL PANELS SHALL NOT BE DESIGNED TO ACT AS A DIAPHRAGM.

GENERAL NOTES:

1. THIS STRUCTURAL WALL PANEL SYSTEM HAS BEEN DESIGNED IN ACCORDANCE WITH THE 2007 FLORIDA BUILDING CODE (F.B.C).
2. ALL WALL PANELS ARE MAX 42" WIDE, CONSIST OF EXTERIOR 26 GA. (t = 0.019" MIN.) AND INTERIOR 26 GA. (t = 0.019" MIN) OR 24 GA. (t = 0.0254" MIN) G-90 CLAD STEEL SKINS (Fy = MIN. 38 KSI) COATED WITH AN EMBOSSED & PAINTED OR TUFF (STUCCO-LIKE) FINISH & ARE FOAM FILLED WITH FOAMED-IN-PLACE NON-CFC 2.0 LB/CU. FT. DENSITY POLYURETHANE.
3. THE WALL PANELS SHALL BE INSTALLED OVER WALL STRUCTURE AS SPECIFIED ON THESE DRAWINGS.
4. THE WALL PANELS MUST BE INSTALLED OVER MIN. 2 SUPPORT SPANS. HORIZONTAL SEAMS MAY BE PRESENT AT CENTERLINE OF SUPPORTING GIRTS PROVIDING THE SEAMS ARE FLASHED & PROPERLY SEALED PER METL-SPAN SPECIFICATIONS AND EACH PANEL END IS SECURED PER THESE DRAWINGS.
5. REQUIRED DESIGN WIND LOADS SHALL BE DETERMINED FOR EACH PROJECT. THIS PANEL SYSTEM MAY NOT BE INSTALLED WHEN THE REQUIRED DESIGN WIND LOADS ARE GREATER THAN THE ALLOWABLE WIND LOADS SPECIFIED ON THIS DRAWING.
7. THIS WALL PANEL SYSTEM HAS BEEN TESTED AS AN IMPACT SYSTEM IN ACCORDANCE WITH PROTOCALS TAS-201, 202 & 203.
8. WALL PANEL MANUFACTURER'S PERMANENT LABEL SHALL BE PLACED AT THE END OF EACH PANEL RUN AND SHALL READ: BUTLER MANUFACTURING
   KANSAS CITY, MISSOURI
   DADE COUNTY PRODUCT CONTROL APPROVED
9. ALL SCREWS SHALL BE CORROSION RESISTANT SELF TAPPING SCREWS.
10. THE SUPPORTING STRUCTURE, OVER WHICH THE PANELS ARE TO BE INSTALLED, MUST BE MINIMUM 14 GAGE (MIN. 0.075") STEEL WITH MIN. Fy = 33 KSI.
11. THESE WALL PANELS SHALL NOT BE CONSIDERED TO OR BE USED FOR TRANSFER OF DIAPHRAM ACTION OF WALL TO SUPPORTING STRUCTURE.

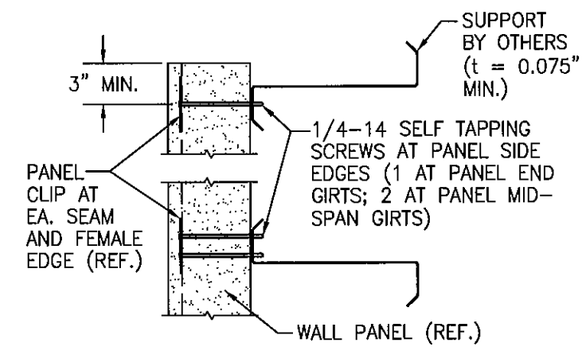

SECTION B
SCALE: 1/2 FULL

ALLOWABLE PRESSURE
(2 OR MORE SPANS PER PANEL)

SPAN (IN.)	ALLOWABLE PRESSURE POSITIVE (PSF)	ALLOWABLE PRESSURE NEGATIVE (PSF)
48	70.0	90.0
54	67.1	80.0
60	64.2	72.0
66	61.2	65.5
72	58.3	60.0
78	53.8	55.4
84	50.0	51.4
90	46.7	48.0
96	43.8	45.0
102	41.2	42.4
108	38.9	40.0
114	36.8	37.9
120	35.0	35.0

ALLOWABLE PRESSURE
(SINGLE SPAN PANELS)

SPAN (IN.)	ALLOWABLE PRESSURE POSITIVE (PSF)	ALLOWABLE PRESSURE NEGATIVE (PSF)
48	64.6	76.7
54	45.4	53.9
60	33.1	39.3
66	24.9	29.5
72	19.2	22.7

PRODUCT REVISED
as complying with the Florida Building Code
Acceptance No 10-0928.09
Expiration Date 03/06/2013
By Miami Dade Product Control

Russell L Benton 9/15/10
PE# 51155

NO.	REVISION DESCRIPTION	BY	DATE
A	REVISED GENERAL NOTES 1 & 2	B.S.	4.17.06
A	ADDRESS CHANGE	B.S.	4.17.06
B	REVISED GENERAL NOTES 1	B.S.	9.15.08

DRAWN BY: B.S | CHECKED BY: R.H.
PLOT: 1=8 | DATE: 8/19/05

DRAWING TITLE: BUTLER THERMAWALL AND TEXTUREWALL

MANUF.: BUTLER MANUFACTURING, A DIVISION OF BLUESCOPE BUILDINGS NORTH AMERICA, INC
1540 GENESSE STREET
KANSAS CITY, MISSOURI 64102
816-968-3000

CONSULTANTS: BALA SOCKALINGAM, PH.D., P.E.
6717 S. YALE AVE, SUITE 200
TULSA, OK 74136
PHONE: 918-492-5992 FAX: 918-493-3568

DRAWING NO. C1409 | REV. B
SHEET NO. 1 OF 2

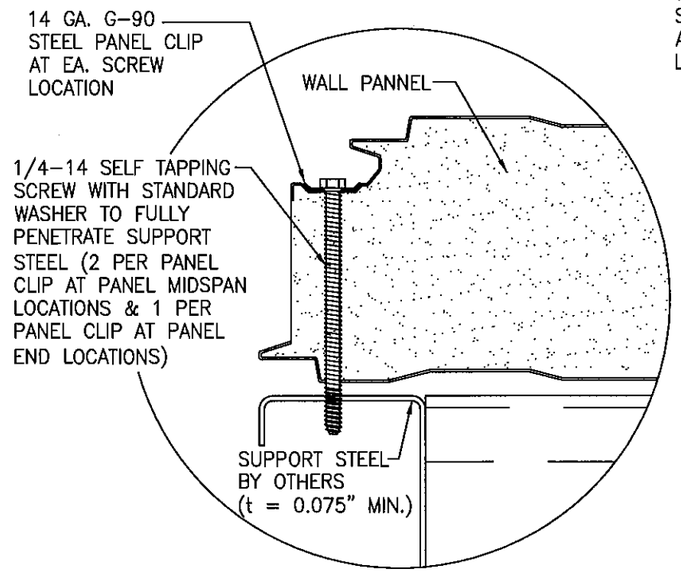

MALE EDGE DETAIL

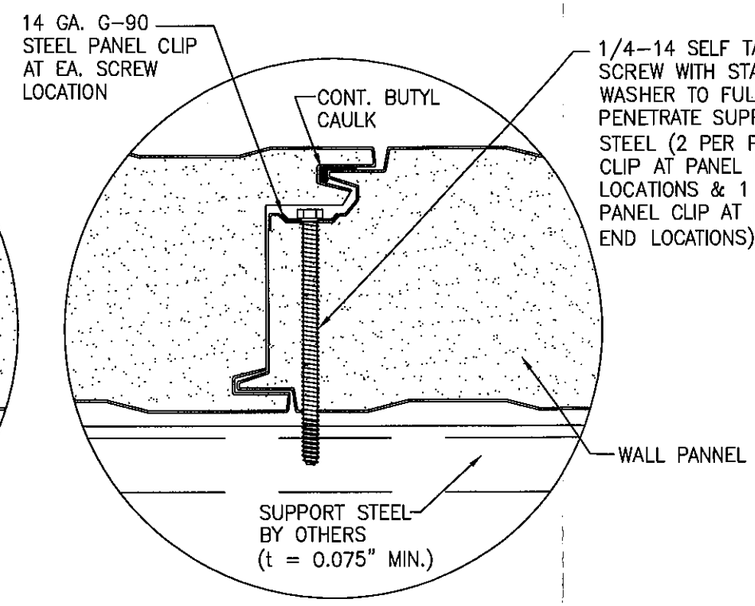

SEAM DETAIL

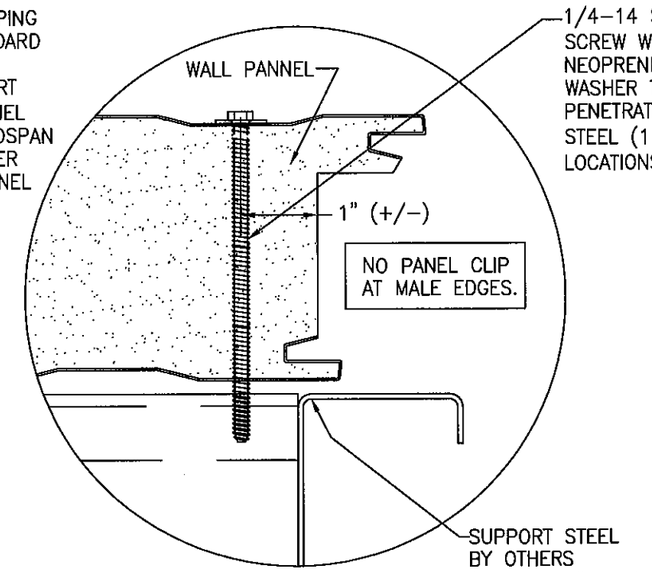

FEMALE EDGE DETAIL

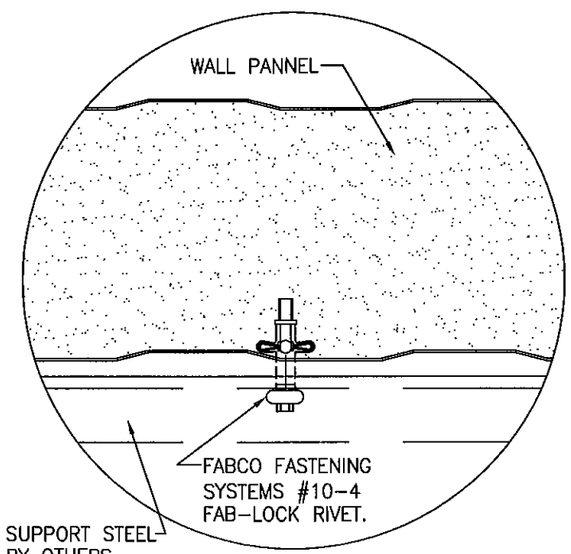

FABLOCK DETAIL

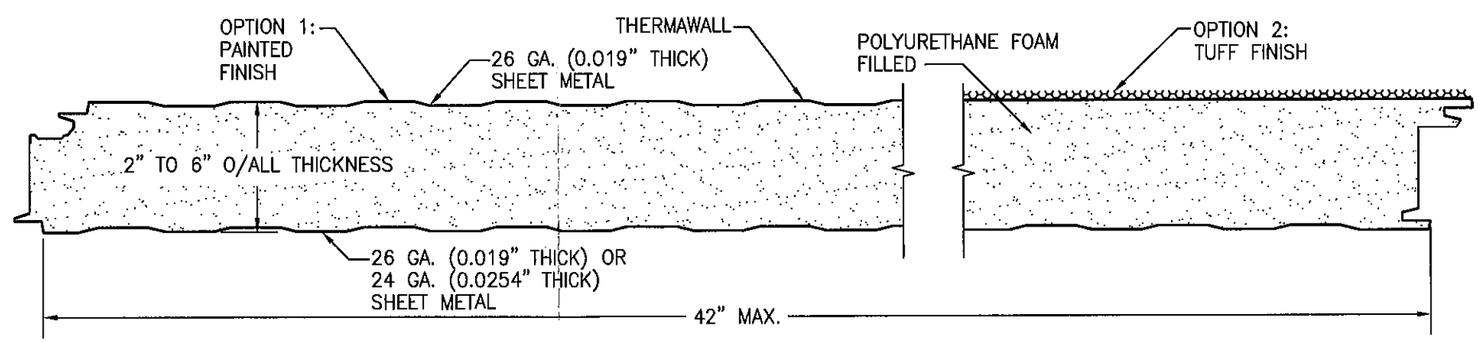

PANEL

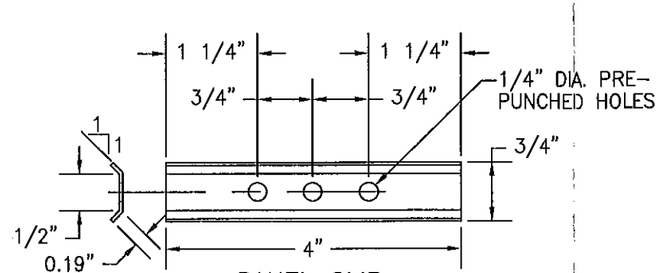

PANEL CLIP
14 GA. (t = 0.075")
33 KSI METAL CLIP

PRODUCT REVISED
as complying with the Florida
Building Code
Acceptance No 10-0928.09
Expiration Date 03/06/2013
By
Miami Dade Product Control

9/15/10
Russell L Benton
PE# 51155

NO.	REVISION DESCRIPTION	BY	DATE
A	CHANGE SKIN LABEL	B.S.	4.17.06
A	ADDRESS CHANGE	B.S.	4.17.06

DRAWN BY: B.S
CHECKED BY: R.H.
PLOT: 1=1
DATE: 8/19/05

DRAWING TITLE: BUTLER THERMAWALL AND TEXTUREWALL

MANUF.: BUTLER MANUFACTURING, A DIVISION OF BLUESCOPE BUILDINGS NORTH AMERIC, INC
1540 GENESSEE STREET
KANSAS CITY, MISSOURI 64102
816-968-3000

CONSULTANTS: BALA SOCKALINGAM, PH.D., P.E.
6717 S. YALE AVE, SUITE 200
TULSA, OK 74136
PHONE: 918-492-5992 FAX: 918-493-3568

DRAWING NO. C1409 REV. A
SHEET NO. 2 OF 2