MIAMI-DADE COUNTY
BUILDING CODE COMPLIANCE OFFICE (BCCO)
PRODUCT CONTROL DIVISION

MIAMI-DADE COUNTY, FLORIDA
METRO-DADE FLAGLER BUILDING

140 WEST FLAGLER STREET, SUITE 1603
MIAMI, FLORIDA 33130-1563
(305) 375-2901 FAX (305) 375-2908
www.buildingcodeonline.com

NOTICE OF ACCEPTANCE (NOA)

Town & Country Industries
400 West McNab Road
Ft. Lauderdale, Florida 33309

SCOPE:

This NOA is being issued under the applicable rules and regulations governing the use of construction materials. The documentation submitted has been reviewed by Miami-Dade County Product Control Division and accepted by the Board of Rules and Appeals (BORA) to be used in Miami Dade County and other areas where allowed by the Authority Having Jurisdiction (AHJ).

This NOA shall not be valid after the expiration date stated below. The Miami-Dade County Product Control Division (In Miami Dade County) and/or the AHJ (in areas other than Miami Dade County) reserve the right to have this product or material tested for quality assurance purposes. If this product or material fails to perform in the accepted manner, the manufacturer will incur the expense of such testing and the AHJ may immediately revoke, modify, or suspend the use of such product or material within their jurisdiction. BORA reserves the right to revoke this acceptance, if it is determined by Miami-Dade County Product Control Division that this product or material fails to meet the requirements of the applicable building code.

This product is approved as described herein, and has been designed to comply with the High Velocity Hurricane Zone of the Florida Building Code.

DESCRIPTION: 0.050" (min.) Aluminum Storm Panels Shutter

APPROVAL DOCUMENT: Drawing No. 08-351, titled " 0.050" Aluminum Storm Panel ", sheets 1 through 6 of 6, prepared by Knezevich Associates Consulting Engineers, dated September 01, 2008, signed and sealed by V.J. Knezevich, P.E. on September 03, 2008 bearing the Miami-Dade County Product Control Renewal stamp with the notice of Acceptance number and expiration date by the Miami-Dade County Product Control Division.

MISSILE IMPACT RATING: Large and Small Missile Impact Resistant

LABELING: Each panel shall bear a permanent label with the manufacturer's name or logo, Miami, FL or Tampa, FL and the following statement: "Miami-Dade County Product Control Approved", unless otherwise noted herein.

RENEWAL of this NOA shall be considered after a renewal application has been filed and there has been no change in the applicable building code negatively affecting the performance of this product.

TERMINATION of this NOA will occur after the expiration date or if there has been a revision or change in the materials, use, and/or manufacture of the product or process. Misuse of this NOA as an endorsement of any product, for sales, advertising or any other purposes shall automatically terminate this NOA. Failure to comply with any section of this NOA shall be cause for termination and removal of NOA.

ADVERTISEMENT: The NOA number preceded by the words Miami-Dade County, Florida, and followed by the expiration date may be displayed in advertising literature. If any portion of the NOA is displayed, then it shall be done in its entirety.

INSPECTION: A copy of this entire NOA shall be provided to the user by the manufacturer or its distributors and shall be available for inspection at the job site at the request of the Building Official.

This NOA **renews NOA # 09-0114.05 a**nd consists of this page 1, evidence submitted pages E-1, E-2, & E-3 as well as approval document mentioned above.

The submitted documentation was reviewed by **Helmy A. Makar, P.E., M.S.**

MIAMI-DADE COUNTY APPROVED

Helmy A. Makar
11/04/2010

NOA No. 10-0929.04
Expiration Date: 11/16/2015
Approval Date: 11/04/2010

Town & Country Industries

NOTICE OF ACCEPTANCE: EVIDENCE SUBMITTED

1. EVIDENCE SUBMITTED UNDER PREVIOUS APPROVAL #00-0809.03

A. DRAWINGS:

1. *Drawing Number 00-159, titled " 0.050" Aluminum Storm Panel", sheets 1 through 6 of 6, prepared by Knezevich & Associates, dated August 1, 2000, last revision #1 dated October 26, 2000, signed and sealed by V. J. Knezevich, P.E.*

B. TESTS:

1. *Test report on Large Missile Impact Test, Cyclic Wind Pressure Test and Uniform Static Air Pressure Test on 0.050" aluminum storm panels, prepared by Construction Testing Corporation, Test Report No. CTC 00-028 dated 06/28/2000, signed and sealed by Christopher G. Tyson, P.E.*

C. CALCULATIONS:

1. *Comparative Analysis and Anchor Analysis, dated 07/12/2000, pages 1 through 56, prepared by Knezevich & Associates, Inc., signed and sealed by V. J. Knezevich, P.E.*
2. *Comparative Analysis, dated 10/26/2000, pages 1 through 3, prepared by Knezevich & Associates, Inc., signed by V. J. Knezevich, P.E.*

D. MATERIAL CERTIFICATION:

1. *Mill Certified Inspection Report of coils, for Aluminum Alloy 3004-H34 by Jupiter Aluminum Corp. with physical properties.*
2. *Certified Tensile Test Report by Certified Testing Laboratories, Report No. CTL-592F dated 06/26/2000, for Aluminum Alloy, signed and sealed by Ramsh Patel, P.E.*

2. EVIDENCE SUBMITTED UNDER PREVIOUS APPROVAL # 03-0421.13

A. DRAWINGS

1. *Drawing No. 03-259, titled " 0.050" Aluminum Storm Panel ", sheets 1 through 6 of 6, prepared by Knezevich & Associates, Inc., dated April 04, 2003, last revision #1 dated September 23, 2003 signed and sealed by V.J. Knezevich, P.E.*

B. TESTS

1. *None.*

C. CALCULATIONS

1. *None.*

D. QUALITY ASSOURANCE

1. *By Miami-Dade County Building Code Compliance Office.*

Helmy A. Makar, P.E., M.S.
Senior Product Control Examiner
NOA No. 10-0929.04
Expiration Date: 11/16/2015
Approval Date: 11/04/2010

NOTICE OF ACCEPTANCE: EVIDENCE SUBMITTED

E. MATERIAL CERTIFICATIONS

1. *None.*

3. EVIDENCE SUBMITTED UNDER PREVIOUS APPROVAL # 05-0713.03

A. DRAWINGS

1. *Drawing No. 05-353, titled " 0.050" Aluminum Storm Panel ", sheets 1 through 6 of 6, prepared by Thornton-Tomasetti Group, dated June 29, 2005, last revision #0 dated June 29, 2005 signed and sealed by V.J. Knezevich, P.E.*

B. TESTS

1. *None.*

C. CALCULATIONS

1. *Anchor Analysis, dated June 15, 2005, 39 pages, prepared by Thornton-Tomasetti Group, signed and sealed by V. J. Knezevich, P.E.*

D. QUALITY ASSOURANCE

1. *By Miami-Dade County Building Code Compliance Office.*

E. MATERIAL CERTIFICATIONS

1. *None.*

4. EVIDENCE SUBMITTED UNDER PREVIOUS APPROVAL #09-0114.05

A. DRAWINGS

1. *Drawing No. 08-351, titled " 0.050" Aluminum Storm Panel ", sheets 1 through 6 of 6, prepared by Knezevich Associates Consulting Engineers, dated September 01, 2008, signed and sealed by V.J. Knezevich, P.E., on September 03, 2008.*

B. TESTS

1. *None.*

C. CALCULATIONS

1. *Anchor Analysis, dated September 09, 2008, 19 pages, prepared by Knezevich Associates Consulting Engineers, dated September 01, 2008, signed and sealed by V.J. Knezevich, P.E., on September 03, 2008.*

D. QUALITY ASSOURANCE

1. *By Miami-Dade County Building Code Compliance Office.*

E. MATERIAL CERTIFICATIONS

1. *None.*

Hemy A. Makar, P.E., M.S.
Senior Product Control Examiner
NOA No. 10-0929.04
Expiration Date: 11/16/2015
Approval Date: 11/04/2010

5. NEW EVIDENCE SUBMITTED

A. DRAWINGS

1. None.

B. TESTS

1. Test report on Large Missile Impact Test and Cyclic Wind Pressure Test on 0.050" Aluminum Storm Panels, prepared by Hurricane Test Laboratory, LLC, Test Report No. HTL 0353-0804-10, dated 09/07/2010, signed and sealed by Vinu J. Abraham, P.E.

C. CALCULATIONS

1. None.

D. QUALITY ASSOURANCE

1. By Miami-Dade County Building Code Compliance Office.

E. MATERIAL CERTIFICATIONS

1. None.

Helmy A. Makar, P.E., M.S.
Senior Product Control Examiner
NOA No. 10-0929.04
Expiration Date: 11/16/2015
Approval Date: 11/04/2010

0.050" ALUMINUM STORM PANEL

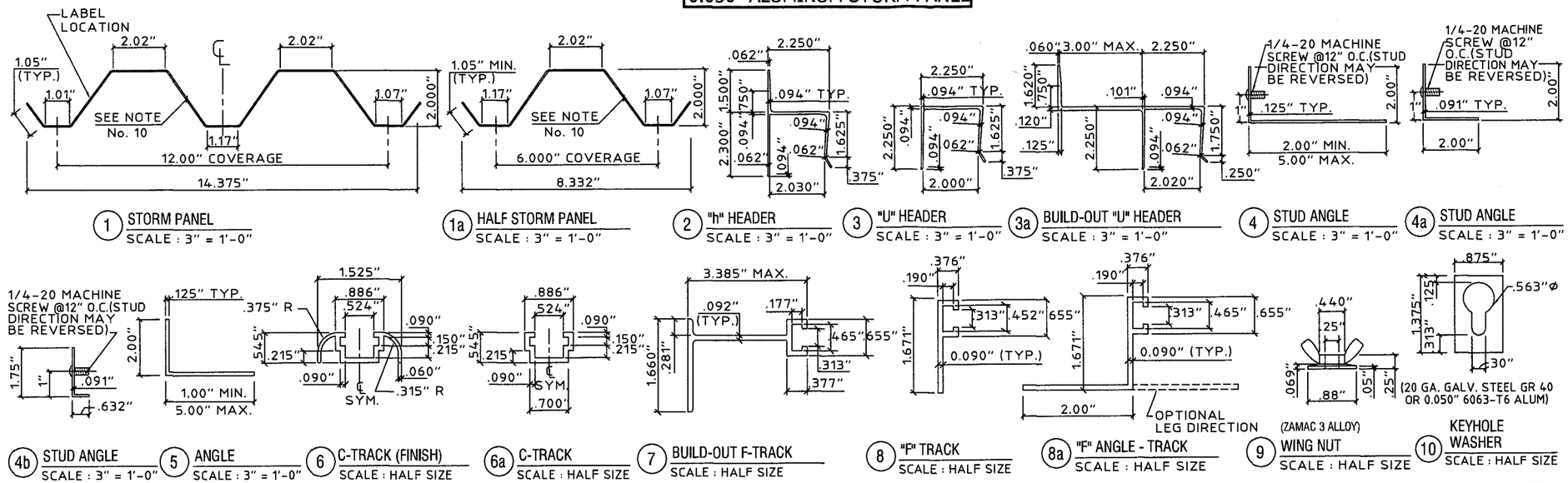

1 STORM PANEL — SCALE : 3" = 1'-0"
1a HALF STORM PANEL — SCALE : 3" = 1'-0"
2 "h" HEADER — SCALE : 3" = 1'-0"
3 "U" HEADER — SCALE : 3" = 1'-0"
3a BUILD-OUT "U" HEADER — SCALE : 3" = 1'-0"
4 STUD ANGLE — SCALE : 3" = 1'-0"
4a STUD ANGLE — SCALE : 3" = 1'-0"
4b STUD ANGLE — SCALE : 3" = 1'-0"
5 ANGLE — SCALE : 3" = 1'-0"
6 C-TRACK (FINISH) — SCALE : HALF SIZE
6a C-TRACK — SCALE : HALF SIZE
7 BUILD-OUT F-TRACK — SCALE : HALF SIZE
8 "F" TRACK — SCALE : HALF SIZE
8a "F" ANGLE - TRACK — SCALE : HALF SIZE
9 WING NUT — SCALE : HALF SIZE
10 KEYHOLE WASHER — SCALE : HALF SIZE

GENERAL NOTES:

1. THESE APPROVAL DOCUMENTS REPRESENT A SHUTTER SYSTEM ANALYZED WITH THE PROVISION SET FOR THE ISSUANCE OF A NOTICE OF ACCEPTANCE (NOA) BY MIAMI-DADE COUNTY PRODUCT CONTROL DIVISION FOR THE HIGH VELOCITY HURRICANE ZONE (HVHZ) OF THE FLORIDA BUILDING CODE.
2. NO INCREASE IN ALLOWABLE STRESS HAS BEEN USED IN THE DESIGN OF THIS PRODUCT. WIND LOAD DURATION FACTOR Cd = 1.6 WAS USED FOR WOOD LAG SCREW DESIGN.
3. DETERMINE THE POSITIVE AND NEGATIVE DESIGN LOADS TO USE WHEN REFERENCING THESE DOCUMENTS IN ACCORDANCE WITH THE GOVERNING CODE AND GOVERNING WIND VELOCITY.
4. THESE APPROVAL DOCUMENTS ARE GENERIC AND DO NOT INCLUDE INFORMATION FOR SITE-SPECIFIC APPLICATION OF THIS SHUTTER SYSTEM.
5. USE OF THESE APPROVAL DOCUMENTS SHALL COMPLY WITH CHAPTER 61G15-23 OF THE FLORIDA ADMINISTRATIVE CODE.
6. THESE APPROVAL DOCUMENTS, ARE SUITABLE TO BE APPLIED BY THE CONTRACTOR PROVIDED THE CONTRACTOR DOES NOT DEVIATE FROM THE CONDITIONS DETAILED HEREIN AND THE CONTRACTOR VERIFIES THAT THE EXISTING STRUCTURE DOES NOT DEVIATE IN EITHER FORM OR MATERIAL FROM THE STRUCTURAL SUBSTRATES DETAILED HEREIN.
7. ANY MODIFICATIONS OR ADDITIONS TO THESE APPROVAL DOCUMENTS WILL VOID THE APPROVAL DOCUMENTS.
8. WHEN THE SITE CONDITIONS DEVIATE FROM THESE APPROVAL DOCUMENTS, THE BUILDING OFFICIAL MAY ELECT ONE OF THE FOLLOWING OPTIONS:
   A) REQUIRE THAT SITE SPECIFIC DOCUMENTS BE PREPARED, SIGNED, DATED AND SEALED BY A LICENSED ENGINEER OR REGISTERED ARCHITECT, WHICH DETAIL AND JUSTIFY THE DEVIATION. SAID DOCUMENTS SHALL BE SUBMITTED TO THE PRODUCT ENGINEER FOR REVIEW AS A CONDITION TO THE BUILDING OFFICIAL GRANTING HIS/HER APPROVAL.
   B) REQUIRE THAT A ONE-TIME SITE SPECIFIC APPROVAL BE APPLIED FOR AND SECURED FROM THE MIAMI-DADE COUNTY PRODUCT CONTROL DIVISION

   WHEN THE SITE CONDITION DEVIATIONS OCCUR WITHIN THE HIGH VELOCITY HURRICANE ZONE AREAS ONLY OPTION "B" SHALL BE ACCEPTED BY THE BUILDING OFFICIAL.
9. PRODUCT MARKINGS SHALL BE WITHIN 12" OF ONE END OF THE PANEL WITH A MINIMUM OF ONE MARKING PER PANEL AND SHALL BE PERMANENTLY LABELED AS FOLLOWS:
   TOWN & COUNTRY INDUSTRIES.
   FT. LAUDERDALE, FL.
   MIAMI-DADE COUNTY PRODUCT APPROVED
10. STORM PANELS SHALL BE 3004-H34 OR 5052-H34 ALUMINUM ALLOY, WITH THE FOLLOWING MINIMUM THICKNESS AND MECHANICAL PROPERTIES: NOMINAL 0.050"
11. ALL EXTRUSIONS SHALL BE 6063-T6 ALUMINUM ALLOY, U.O.N
12. ALL BOLTS AND WASHERS SHALL BE GALVANIZED OR STAINLESS STEEL WITH A MINIMUM TENSILE STRENGTH OF 60 K.S.I., U.O.N.
13. TOP & BOTTOM DETAILS SHOWN MAY BE INTERCHANGED AS FIELD CONDITIONS DICTATE. PANELS MAY BE MOUNTED HORIZONTALLY WHERE APPLICABLE, EXCEPT FOR "h" AND "U" HEADER MOUNTING CONDITIONS.

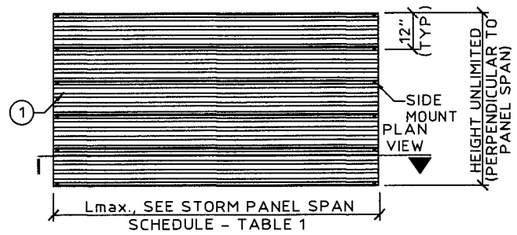

TYPICAL HORIZONTAL ELEVATION
SCALE: 1/4" = 1' - 0"

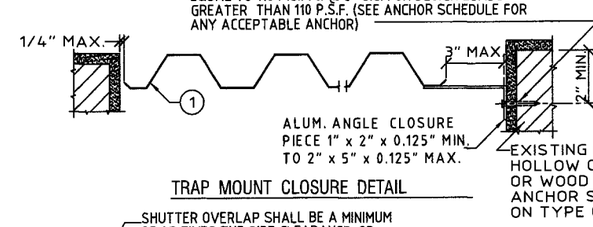

TRAP MOUNT CLOSURE DETAIL

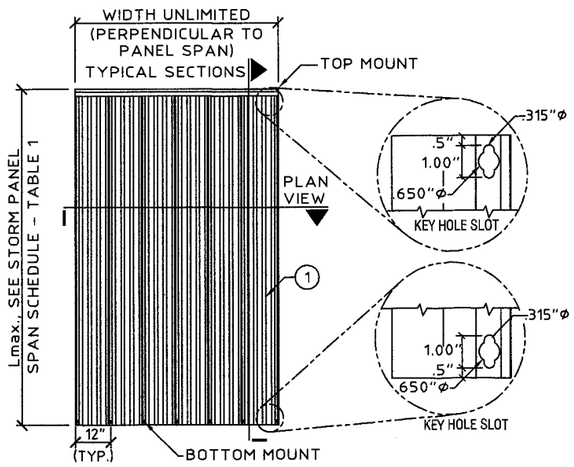

TYPICAL VERTICAL ELEVATION
SCALE: 1/4" = 1' - 0"

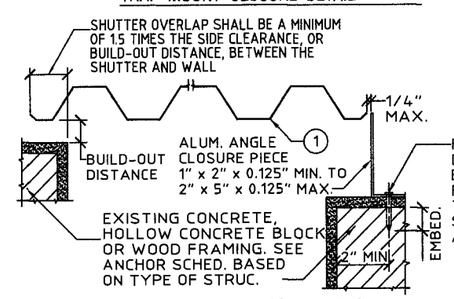

BUILD-OUT MOUNT CLOSURE DETAIL

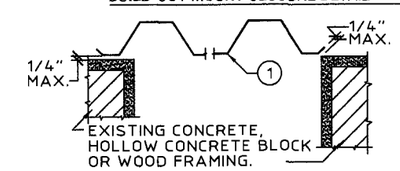

WALL MOUNT CLOSURE DETAIL

TYPICAL CLOSURE DETAILS (PLAN)
SCALE: 1-1/2" = 1'-0"

PRODUCT REVISED
as complying with the Florida Buiding Code
Acceptance No 09-0114.05
Expiration Date 11/16/2010
By Helena A. Molina
Miami Dade Product Control Division

PRODUCT RENEWED
as complying with the Florida Building Code
Acceptance No 10-0929.04
Expiration Date 11/16/2015
By Helena A. Molina
Miami Dade Product Control Division

eyewall Armor™
HURRICANE PROTECTION

KNEZEVICH ASSOCIATES
Consulting Engineers
2590 S.W. 105th Terrace • Davie, Florida 33324
T (954) 821-8333 • F (954) 452-7960 • COA: 27989
website: www.Knezevich.com • email: VJK@Knezevich.com

Copyright ©2008 V.J.Knezevich & Associates, LLC d/b/a Knezevich Associates

Town & Country INDUSTRIES
Wholesale Aluminum and Building Products
400 West McNab Road
Fort Lauderdale, FL 33309
Phone 954.970.9999 Fax 954-970-9988

revisions			
no	date	by	description

V.J. Knezevich
Professional Engineer
FL License No.: PE 0010983
FLORIDA COA No.: 27989

Sept 3 2008

drawn by	scale
WBs	AS NOTED

date 09/01/2008
project no. 08-351

0.050" ALUMINUM STORM PANEL

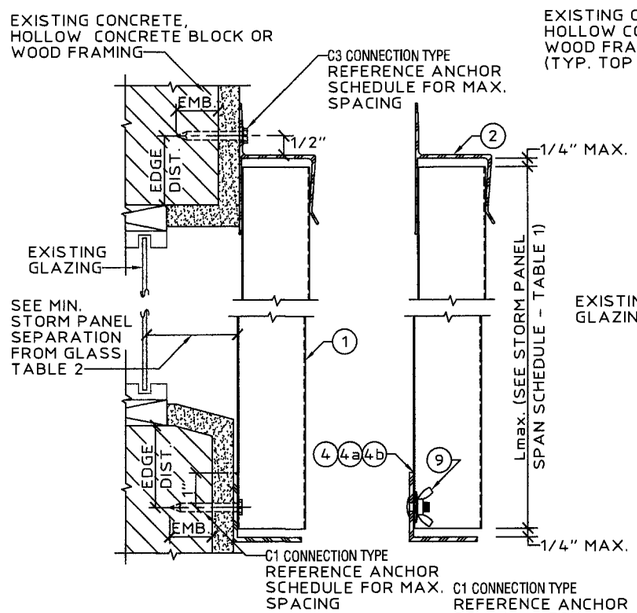

A WALL MOUNT SECTION
SCALE: 3" = 1' - 0"

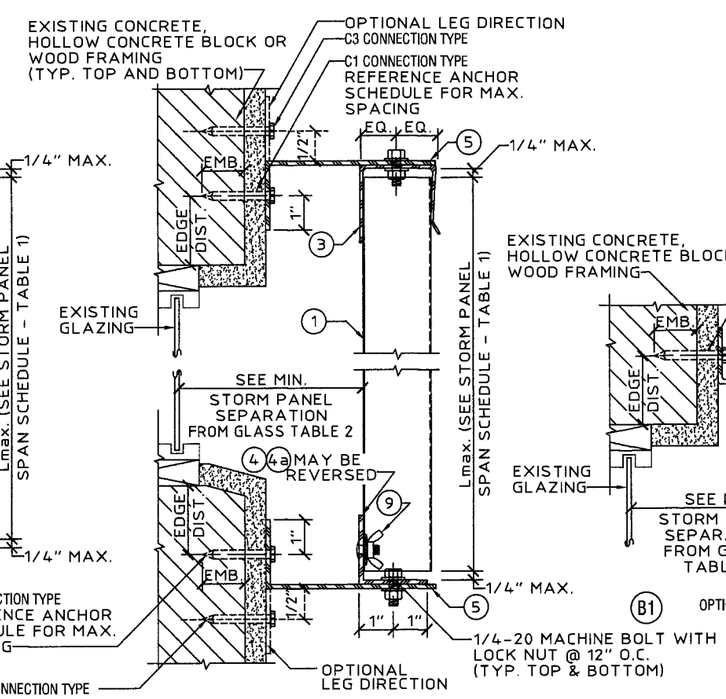

B BUILD-OUT MOUNT SECTION
SCALE: 3" = 1' - 0"

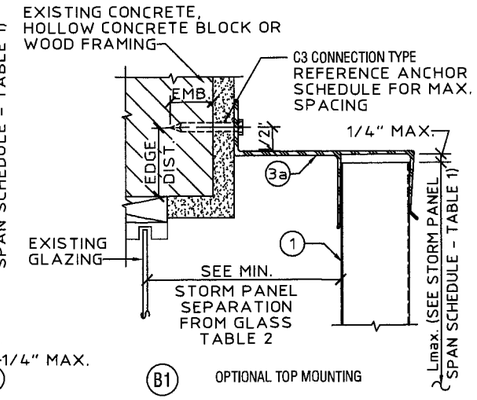

B1 OPTIONAL TOP MOUNTING

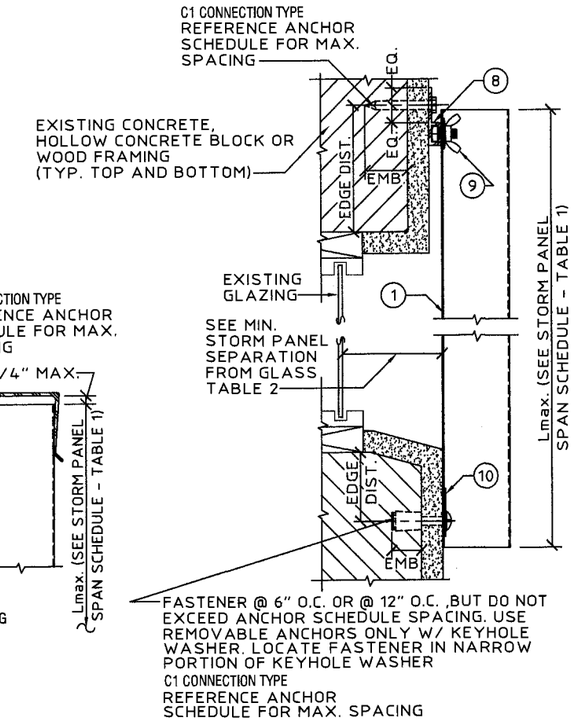

C "F" TRACK/DIRECT MOUNT SECTION
SCALE: 3" = 1' - 0"

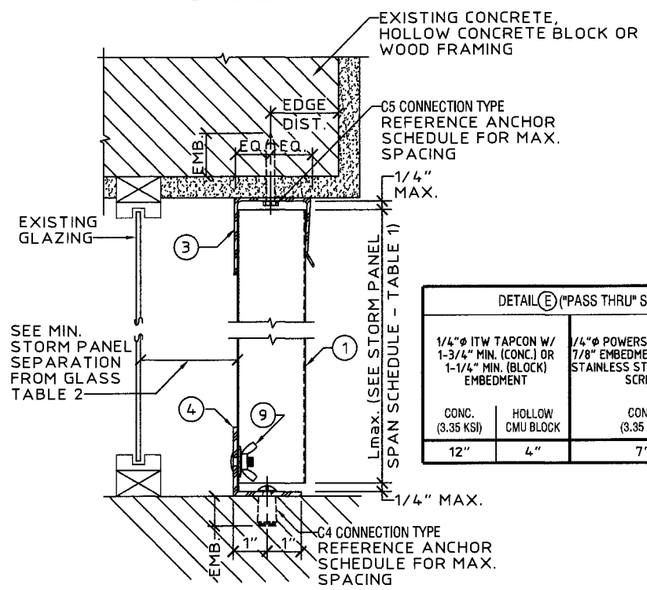

D CEILING/FLOOR MOUNT SECTION
SCALE: 3" = 1' - 0"

DETAIL (E) ("PASS THRU" SEC.) ANCHOR SCHEDULE			
1/4"Ø ITW TAPCON W/ 1-3/4" MIN. (CONC.) OR 1-1/4" MIN. (BLOCK) EMBEDMENT		1/4"Ø POWERS CALK-IN W/ 7/8" EMBEDMENT & 1/4-20 STAINLESS STEEL MACHINE SCREW	1/4"Ø x MIN. 2-1/2" LONG WOOD LAG SCREW W/ MINIMUM 1-3/4" EMBEDMENT SHEAR PARALLEL OR PERPENDICULAR TO WOOD GRAIN
CONC. (3.35 KSI)	HOLLOW CMU BLOCK	CONC. (3.35 KSI)	WOOD
12"	4"	7"	12"

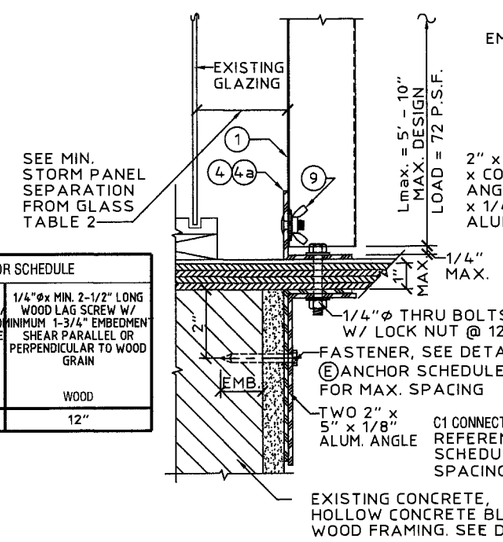

E "PASS THRU" SECTION
SCALE: 3" = 1' - 0"

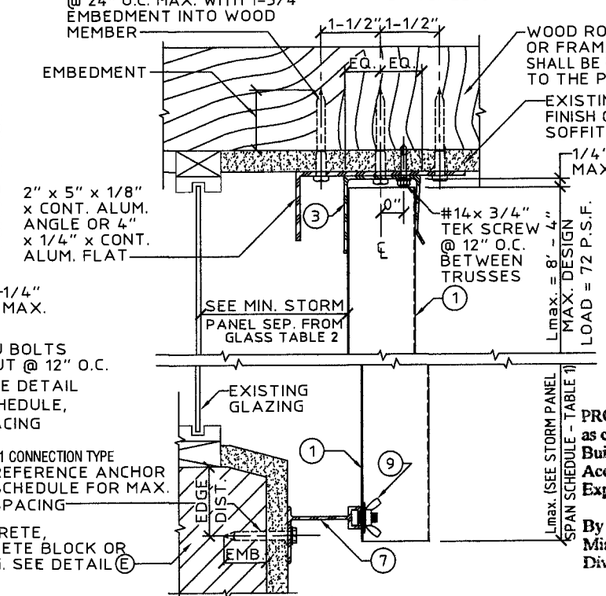

F CEILING MOUNT / BUILD OUT SECTION
SCALE: 3" = 1' - 0"

PRODUCT REVISED
as complying with the Florida Buiding Code
Acceptance No 09-0114.05
Expiration Date 11/16/2010
By Helena A. Melo
Miami Dade Product Control Division

PRODUCT RENEWED
as complying with the Florida Building Code
Acceptance No 10-0929.04
Expiration Date 11/16/2015
By Helena A. Melo
Miami Dade Product Control Division

KNEZEVICH ASSOCIATES
Consulting Engineers
2590 S.W. 60th Terrace Davie, Florida 33324
T (954) 821-6133 • F (954) 452-7960 • COA 27989
website: www.knezevich.com • email: VJK@Knezevich.com

Copyright ©2008 V.J.Knezevich & Associates, LLC d/b/a Knezevich Associates

Town&Country INDUSTRIES
Wholesale Aluminum and Building Products
400 WEST McNAB ROAD
FORT LAUDERDALE, FL 33309
PHONE 954.970.9999 FAX 954-970-9988

revisions			
no	date	by	description

V.J. Knezevich
Professional Engineer
FL License No.: PE 0010983
FLORIDA COA No.: 27989

Sept 3 2008

drawn by	scale
wbs	AS NOTED

date 05/15/2008

project no. 08-351

0.050" ALUMINUM STORM PANEL

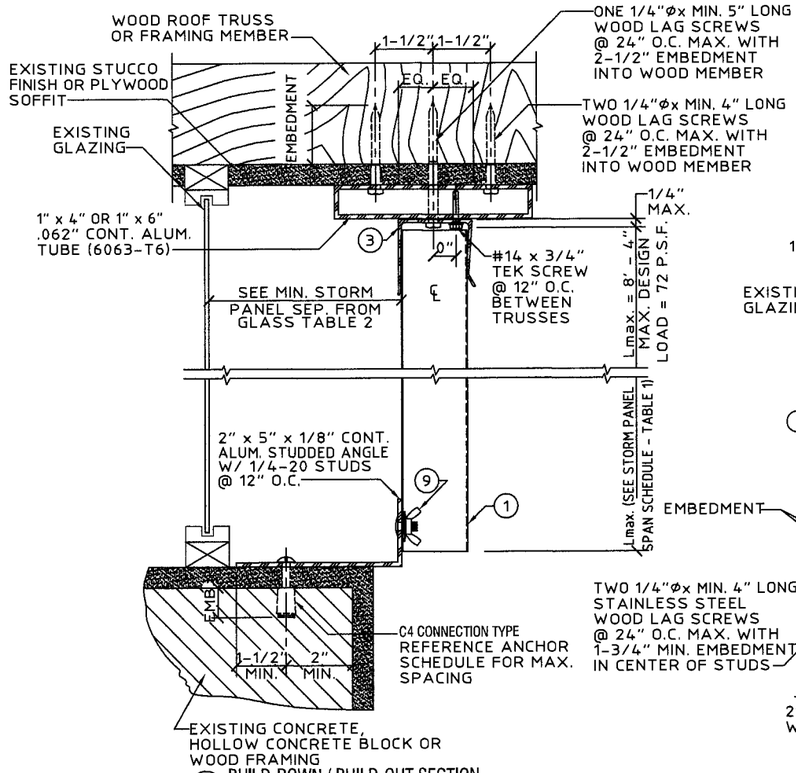

G BUILD-DOWN / BUILD-OUT SECTION
SCALE: 3" = 1' - 0"

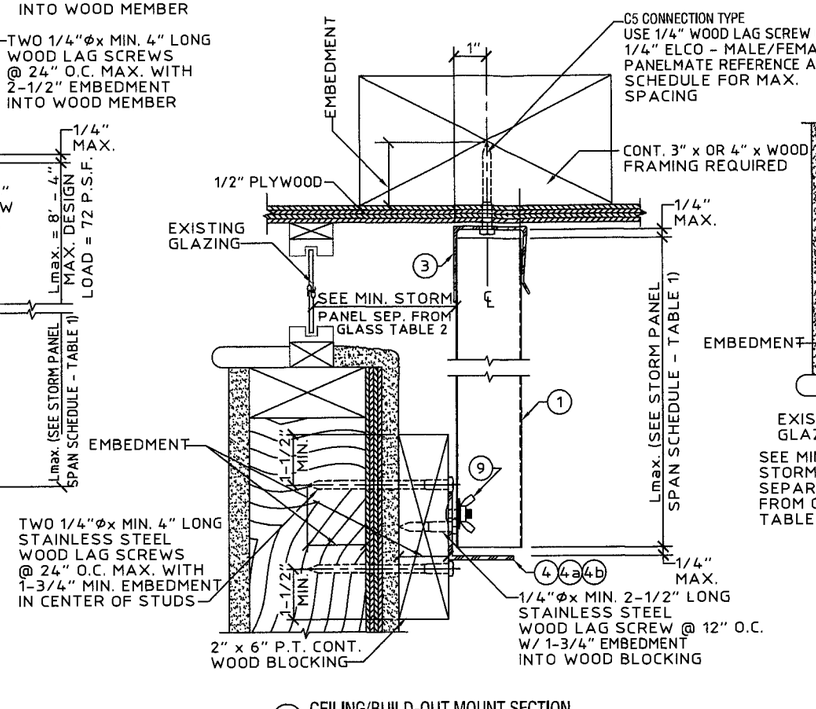

H CEILING/BUILD-OUT MOUNT SECTION
SCALE: 3" = 1' - 0"

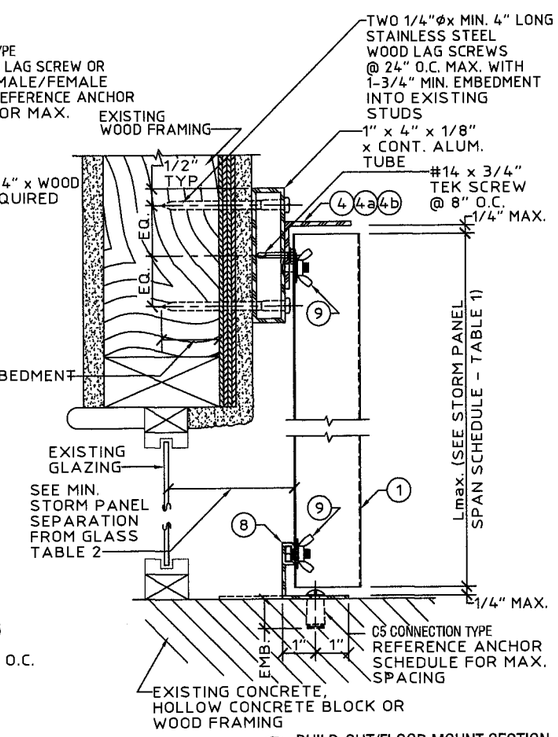

J BUILD-OUT/FLOOR MOUNT SECTION
SCALE: 3" = 1' - 0"

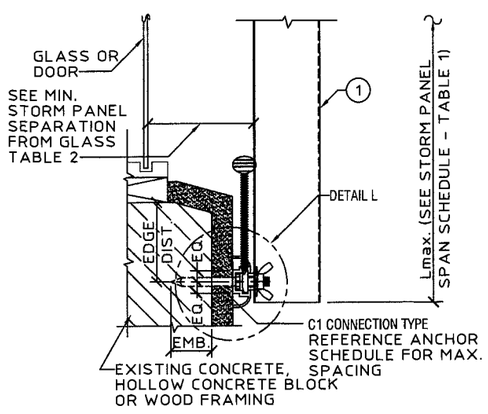

NOTE: USE OF DETAIL SHALL BE IN CONJUNCTION WITH AN "h" HEADER OR "U" HEADER TOP MOUNT

K C-TRACK ASSEMBLY - INSIDE MOUNT
SCALE: 3" = 1' - 0"

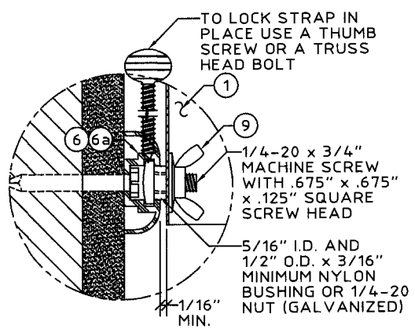

L C-TRACK ASSEMBLY - (BLOW UP)
SCALE: HALF SIZE

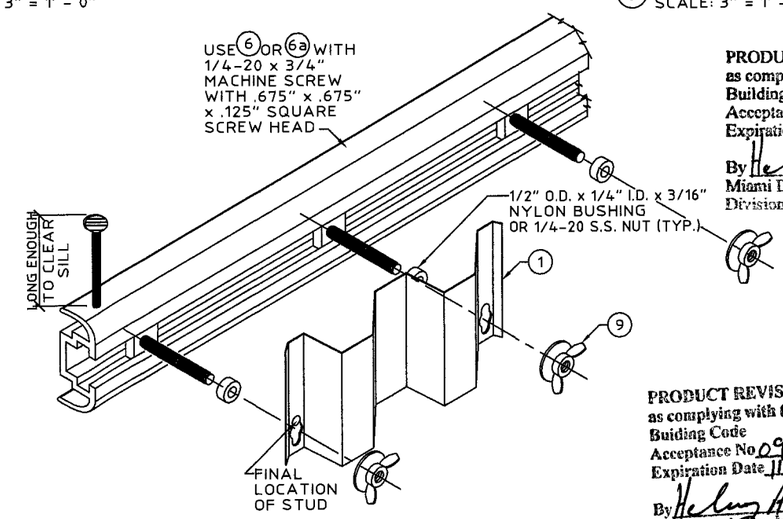

M C-TRACK ASSEMBLY (ISOMETRIC VIEW)
N.T.S.

PRODUCT RENEWED
as complying with the Florida Building Code
Acceptance No. 10-0929.04
Expiration Date 11/16/2015
By [signature]
Miami Dade Product Control Division

PRODUCT REVISED
as complying with the Florida Buiding Code
Acceptance No. 09-0114.05
Expiration Date 11/16/2010
By [signature]
Miami Dade Product Control Division

KNEZEVICH ASSOCIATES
Consulting Engineers
2590 S.W. 105th Terrace • Davie, Florida 33324
T (954) 821-6933 • F (954) 452-7960 • COA 27989
website: www.Knezevich.com • email: VJK@Knezevich.com

Copyright ©2008 V.J.Knezevich & Associates, LLC d/b/a Knezevich Associates

Town&Country INDUSTRIES
Wholesale Aluminum and Building Products
400 WEST MCNAB ROAD
FORT LAUDERDALE, FL. 33309
PHONE 954.970.9999 FAX 954-970-9988

revisions			
no	date	by	description

V.J. Knezevich
Professional Engineer
FL License No.: PE 0010983
FLORIDA COA No.: 27989

Sept 3, 2008

drawn by	scale
WBS	AS NOTED

date 05/15/2008

project no. 08-351

0.050" ALUMINUM STORM PANEL

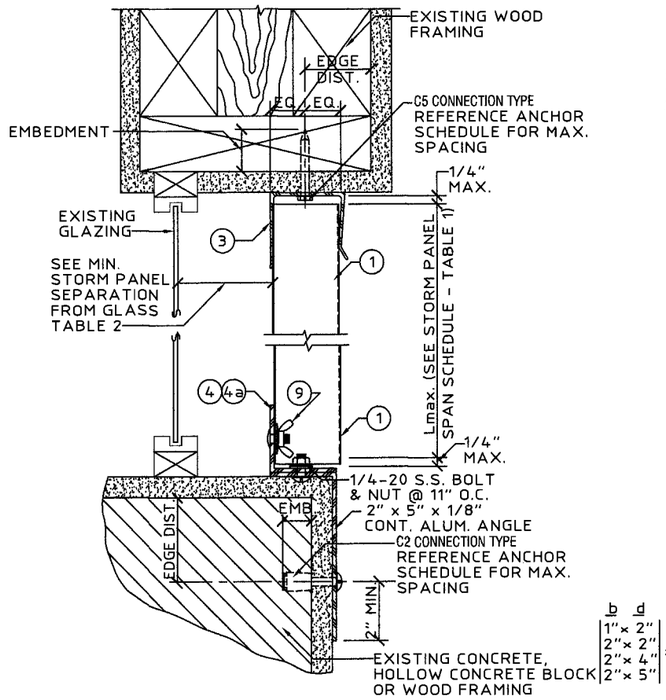

N WOOD CEILING/ INSIDE MOUNT SECTION
SCALE: 3" = 1'-0"

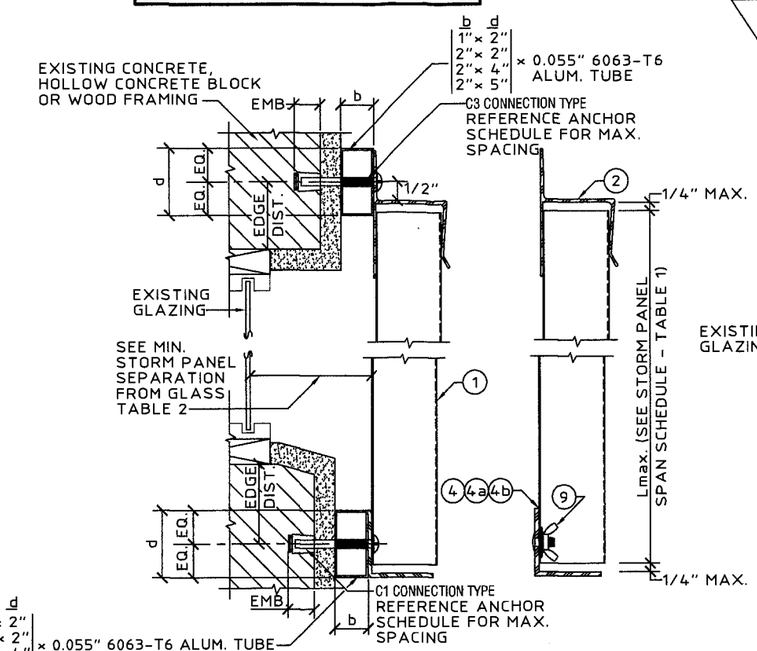

P WALL MOUNT SECTION
SCALE: 3" = 1' - 0"

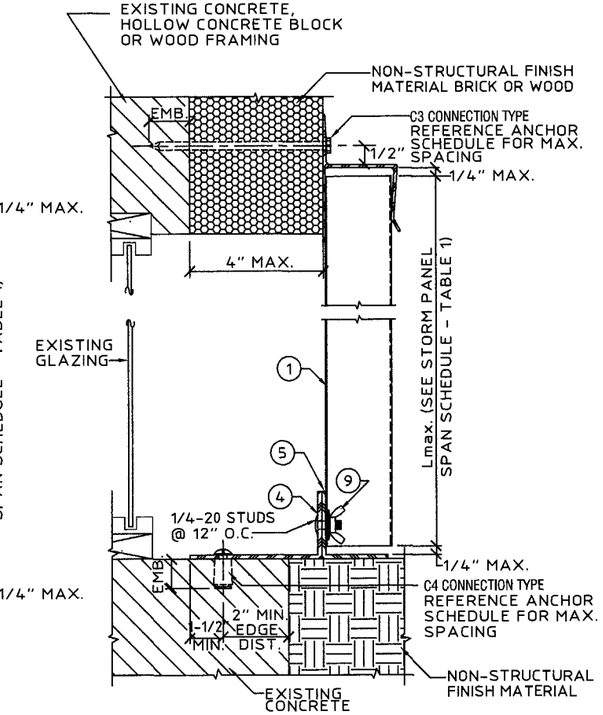

Q WALL MOUNT / BUILD OUT SECTION
SCALE: 3"= 1'- 0"

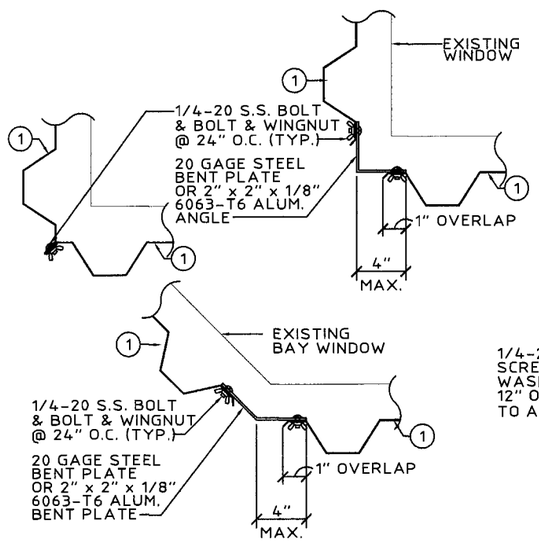

R TYPICAL CORNER CLOSURE DETAILS (PLAN)
SCALE: 1-1/2" = 1'-0"

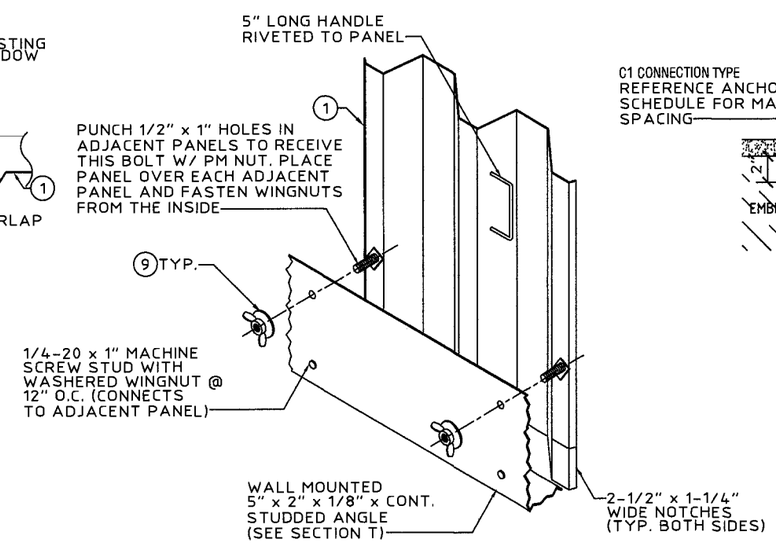

S OPTIONAL INTERIOR FASTENING DETAIL (ISOMETRIC)
N.T.S.

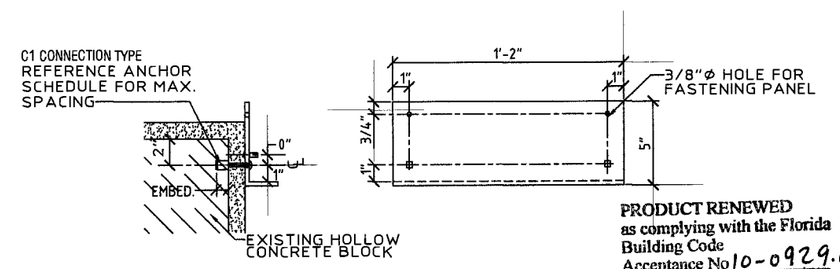

(MAX. PANEL HEIGHT = 7' - 4" & MAX. DESIGN LOAD 72.00#P.S.F.)

T INTERIOR FASTENING ANGLE ASSEMBLY
SCALE: 1-1/2" = 1'-0"

DETAILS (S) & (T) NOTE:
THESE DETAILS DEPICT THE CONNECTION OF THE LAST PANEL FOR AN OPENING WITH PANELS INSTALLED FROM INSIDE. USE OF THESE DETAILS SHALL BE IN CONJUNCTION WITH AN "h" HEADER OR "U" HEADER TOP MOUNT.

PRODUCT RENEWED
as complying with the Florida Building Code
Acceptance No 10-0929.04
Expiration Date 11/16/2015
By Miami Dade Product Control Division

PRODUCT REVISED
as complying with the Florida Building Code
Acceptance No 09-0114.05
Expiration Date 11/16/2010
By Miami Dade Product Control Division

KNEZEVICH ASSOCIATES
Consulting Engineers
2590 S.W. 105th Terrace Davie, Florida 33324
T (954) 821-8313 • F (954) 450-7980 COA 27989
website: www.Knezevich.com • email: VJK@Knezevich.com

Copyright ©2008 VJKnezevich & Associates, LLC d/b/a Knezevich Associates

Town&Country INDUSTRIES
Wholesale Aluminum and Building Products
400 West McNab Road
Fort Lauderdale, FL 33309
PHONE 954.970.9999 FAX 954-970-9988

revisions			
no	date	by	description

V.J. Knezevich
Professional Engineer
FL License No.: PE 0010983
FLORIDA COA No.: 27989

Sept 3, 2008

drawn by	scale
WDS	AS NOTED

date 05/15/2008

project no. 08-351

0.050" ALUMINUM STORM PANEL

ANCHOR SCHEDULE

FASTENER MAXIMUM SPACING (INCHES) REQUIRED FOR VARIOUS DESIGN LOADS AND SPANS

EXIST. STRUC.	ANCHOR TYPE	LOAD (W) P.S.F. MAX. (SEE NOTE 1)	SPANS UP TO 6'-0" (SEE NOTE 1)					SPANS UP TO 8'-8" (SEE NOTE 1)					SPANS UP TO 12'-0" (SEE NOTE 1)					SPANS UP TO 6'-0" (SEE NOTE 1)					SPANS UP TO 8'-8" (SEE NOTE 1)					SPANS UP TO 12'-0" (SEE NOTE 1)				
			MIN. 1" EDGE DISTANCE															MIN. 2 1/2" EDGE DISTANCE														
			CONNECTION TYPE (SEE NOTE 3)					CONNECTION TYPE (SEE NOTE 3)					CONNECTION TYPE (SEE NOTE 3)					CONNECTION TYPE (SEE NOTE 3)					CONNECTION TYPE (SEE NOTE 3)					CONNECTION TYPE (SEE NOTE 3)				
			C1	C2	C3	C4	C5	C1	C2	C3	C4	C5	C1	C2	C3	C4	C5	C1	C2	C3	C4	C5	C1	C2	C3	C4	C5	C1	C2	C3	C4	C5
CONCRETE	1/4"ø ITW TAPCON W/ 1-3/4" MIN. EMBEDMENT	43.0	14	14	14	8	8	14	14	14	6	5	14	11	14	4	4	14	14	14	14	14	14	14	14	14	12	14	12	14	10	9
		50.0	14	14	14	7	6	14	14	14	5	4	14	8	14	3	3	14	14	14	14	14	14	14	14	12	10	14	9	14	9	7
		72.0	14	14	14	5	4	14	8	12	3	3	14	7	10	3	3	14	14	14	12	10	14	9	13	8	7	14	8	11	8	7
		84.0	14	11	14	4	4	14	7	10	3	3	14	7	10	3	3	14	13	14	10	9	14	8	11	8	7	14	8	11	8	7
		150.0	14	7	10	3	3	14	7	10	3	3	14	7	10	3	3	14	8	11	8	7	14	8	11	8	7	14	8	11	8	7
	ELCO ULTRACON WITH 1/4"ø W/ 1-3/4" MIN. EMBEDMENT	43.0	14	14	14	14	12	14	14	14	9	8	14	10	14	7	6	14	14	14	14	14	14	14	14	14	12	14	10	14	10	8
		50.0	14	14	14	12	10	14	14	14	8	7	14	7	13	6	5	14	14	14	14	14	14	14	14	12	10	14	8	13	9	7
		72.0	14	14	14	8	7	14	7	11	5	5	14	6	9	5	4	14	14	14	12	10	14	7	11	8	7	14	6	9	8	6
		84.0	14	10	14	7	6	14	6	9	5	4	14	6	9	5	4	14	11	14	10	9	14	6	9	8	6	14	6	9	8	6
		150.0	14	6	9	5	4	14	6	9	5	4	14	6	9	5	4	14	6	9	8	6	14	6	9	8	6	14	6	9	8	6
			MIN. 1 1/4" EDGE DISTANCE															MIN. 3" EDGE DISTANCE														
	1/4"ø ALL POINTS SOLID-SET ANCHOR WITH 7/8" EMBEDMENT & 1/4-20 STAINLESS STEEL MACHINE SCREW	43.0	14	14	14	11	9	14	14	14	7	6	14	7	14	5	4	14	14	14	14	14	14	14	14	14	14	14	12	14	12	10
		50.0	14	14	14	9	8	14	10	14	6	5	13	5	9	4	4	14	14	14	14	14	14	14	14	14	12	14	9	14	11	9
		72.0	14	10	14	6	5	12	5	7	4	3	11	4	6	4	3	14	14	14	14	12	14	8	13	10	8	14	7	10	10	8
		84.0	14	7	14	5	4	11	4	6	4	3	11	4	6	4	3	14	12	14	13	10	14	7	10	10	8	14	7	10	10	8
		150.0	11	4	6	4	3	11	4	6	4	3	11	4	6	4	3	14	7	10	10	8	14	7	10	10	8	14	7	10	10	8
			MIN. 2" EDGE DISTANCE															MIN. 2 1/2" EDGE DISTANCE														
	1/4"ø ELCO MALE/ FEMALE "PANELMATE" W/ 1-7/8" MIN. EMBED. & 1/4-20 MACHINE SCREW WITH NUT	43.0	12	12	12	12	12	12	12	12	11	10	12	9	12	8	7	12	12	12	12	12	12	12	12	12	12	12	12	12	10	9
		50.0	12	12	12	12	12	12	12	12	10	8	12	7	12	7	6	12	12	12	12	12	12	12	12	12	10	12	9	12	9	7
		72.0	12	12	12	10	8	12	6	10	7	5	12	6	8	6	5	12	12	12	12	10	12	8	12	8	7	12	7	10	8	7
		84.0	12	10	12	8	7	12	6	8	6	5	12	6	8	6	5	12	12	12	10	9	12	7	10	8	7	12	7	10	8	7
		150.0	12	6	8	6	5	12	6	8	6	5	12	6	8	6	5	12	7	10	8	7	12	7	10	8	7	12	7	10	8	7
	1/4"ø ELCO CRETE FLEX W/ 1-3/4" MIN. EMBEDMENT	43.0																14	14	14	14	14	14	14	14	14	14	14	13	14	14	12
		50.0																14	14	14	14	14	14	14	14	14	14	14	10	14	12	10
		72.0																14	14	14	14	14	14	10	14	12	9	14	9	12	11	9
		84.0																14	14	14	14	12	14	9	12	11	9	14	9	12	11	9
		150.0																14	9	12	11	9	14	9	12	11	9	14	9	12	11	9
HOLLOW CONCRETE BLOCK			MIN. 1" EDGE DISTANCE															MIN. 2 1/2" EDGE DISTANCE														
	1/4"ø ITW TAPCON W/ 1-1/4" MIN. EMBEDMENT	43.0	8	8	8	4	3	5	4	5	3		4		4			14	14	14	9	7	9	7	9	6	4	7	3	7	4	3
		50.0	7	7	7	3	3	5		5			3					12	12	12	7	6	8	4	8	5	4	6		4	3	3
		72.0	5		5			3					3					8	4	8	5	4	5		3	3		5		3	3	
		84.0	4		4			3					3					7	3	7	4	3	5		3	3		5		3	3	
		150.0	3					3					3					5		3	3		5		3	3		5		3	3	
	ELCO ULTRACON WITH 1/4"ø W/ 1-1/4" MIN. EMBEDMENT	43.0	14	14	14	8	6	11	8	11	5	4	8	3	8	4	3	14	14	14	11	8	11	8	11	7	5	8	3	8	5	4
		50.0	14	14	14	7	5	9	5	9	4	3	7		5	3		14	14	14	9	7	9	5	9	6	5	7		5	4	3
		72.0	9	5	9	4	3	6		4	3		6		3	3		9	5	9	6	5	6		4	4	3	6		3	4	3
		84.0	8	4	8	4	3	6		3	3		6		3	3		8	4	8	5	4	6		3	4	3	6		3	4	3
		150.0	6		3	3		6		3	3		6		3	3		6		3	4	3	6		3	4	3	6		3	4	3
	1/4"ø ELCO CRETE FLEX W/ 1-1/4" MIN. EMBEDMENT	43.0	14	14	14	6	5	12	9	12	4	3	9	4	9	3		14	14	14	14	11	14	14	14	10	8	14	6	14	7	5
		50.0	14	14	14	5	4	10	6	10	3	3	7	3	5			14	14	14	12	10	14	9	14	8	7	12	5	8	6	5
		72.0	10	6	10	3	3	7	3	4			7		3			14	9	14	8	7	11	4	7	6	4	11	4	5	5	4
		84.0	9	4	9	3		7		3			7		3			14	7	14	7	6	11	4	5	5	4	11	4	5	5	4
		150.0	7		3			7		3			7		3			11	4	5	5	4	11	4	5	5	4	11	4	5	5	4
			MIN. 2" EDGE DISTANCE															MIN. 3" EDGE DISTANCE														
	1/4"ø ALL POINTS SOLID-SET ANCHOR WITH 7/8" EMBEDMENT & 1/4-20 STAINLESS STEEL MACHINE SCREW	43.0	14	14	14	13	11	14	14	14	9	8	14	7	14	6	5	14	14	14	14	14	14	14	14	12	10	14	8	14	9	7
		50.0	14	14	14	11	9	14	11	14	8	6	14	6	10	5	4	14	14	14	14	12	14	12	14	10	8	14	6	11	7	6
		72.0	14	11	14	8	6	13	5	8	5	4	13	5	7	5	4	14	12	14	10	8	14	6	9	7	6	14	5	7	7	5
		84.0	14	8	14	6	5	13	5	7	5	4	13	5	7	5	4	14	9	14	9	7	14	5	7	7	5	14	5	7	7	5
		150.0	13	5	7	5	4	13	5	7	5	4	13	5	7	5	4	14	5	7	7	5	14	5	7	7	5	14	5	7	7	5
	1/4"ø ELCO MALE/ FEMALE "PANELMATE" W/ 1-1/4" MIN. EMBED. & 1/4-20 MACHINE SCREW WITH NUT	43.0	12	12	12	10	8	12	12	12	7	6	12	5	12	5	4	12	12	12	12	9	12	12	12	8	6	12	6	12	6	4
		50.0	12	12	12	9	7	12	8	12	6	5	10	4	7	4	3	12	12	12	10	8	12	8	12	7	5	10	4	7	5	4
		72.0	12	8	12	6	5	10	4	6	4	3	9	3	5	4	3	12	8	12	7	5	10	4	6	5	4	9	3	5	4	3
		84.0	12	6	12	5	4	9	3	5	4	3	9	3	5	4	3	12	6	12	6	5	9	3	5	4	3	9	3	5	4	3
		150.0	9	3	5	4	3	9	3	5	4	3	9	3	5	4	3	9	3	5	4	3	9	3	5	4	3	9	3	5	4	3

ANCHOR SCHEDULE

FASTENER MAXIMUM SPACING (INCHES) REQUIRED FOR VARIOUS DESIGN LOADS AND SPANS

EXIST. STRUC.	ANCHOR TYPE	LOAD (W) P.S.F. MAX. (SEE NOTE 1)	MIN. 3/4" EDGE DISTANCE														
			SPANS UP TO 6'-0" (SEE NOTE 1)					SPANS UP TO 8'-8" (SEE NOTE 1)					SPANS UP TO 12'-0" (SEE NOTE 1)				
			CONNECTION TYPE (SEE NOTE 3)					CONNECTION TYPE (SEE NOTE 3)					CONNECTION TYPE (SEE NOTE 3)				
			C1	C2	C3	C4	C5	C1	C2	C3	C4	C5	C1	C2	C3	C4	C5
WOOD	2" MIN. 1/4"ø x MIN. 3" LONG LAG SCREW W/ MIN. 2" EMBED. SHEAR PARALLEL OR PERP. TO WOOD GRAIN	43.0	14	14	14	14	14	14	14	14	11	10	14	14	14	8	7
		50.0	14	14	14	14	13	14	14	14	9	9	14	13	14	7	6
		72.0	14	14	14	10	9	14	12	14	6	6	14	11	14	6	5
		84.0	14	14	14	8	7	14	11	14	6	5	14	11	14	6	5
		150.0	14	11	14	6	5	14	11	14	6	5	14	11	14	6	5
	* 7/16"ø WOOD BUSHING W/ 5/8" MIN. EMBED. & 1/4-20 STAINLESS STEEL MACHINE SCREW	43.0	14	14	14			13	9	13			9	4	9		
		50.0	14	14	14			11	6	11			8	3	5		
		72.0	11	6	11			7	3	4			7		3		
		84.0	9	4	9			7		3			7		3		
		150.0	7		3			7		3			7		3		
	* * 1/4"ø ELCO MALE/ FEMALE "PANELMATE" W/ 1-7/8" MIN. EMBED. & 1/4-20 MACHINE SCREW WITH NUT	43.0	14	14	14	14	13	14	14	14	10	9	14	10	14	7	6
		50.0	14	14	14	13	11	14	14	14	9	8	14	7	13	6	5
		72.0	14	14	14	9	8	14	7	11	6	5	14	6	9	6	5
		84.0	14	10	14	8	6	14	6	9	6	5	14	6	9	6	5
		150.0	14	6	9	6	5	14	6	9	6	5	14	6	9	6	5

ANCHOR NOTES:

1. SPANS AND LOADS SHOWN HERE ARE FOR DETERMINING ANCHOR SPACING ONLY. ALLOWABLE STORM PANEL SPANS FOR SPECIFIC LOADS MUST BE LIMITED TO THOSE SHOWN IN TABLE 1.
2. ENTER ANCHOR SCHEDULE BASED ON THE EXISTING STRUCTURE MATERIAL, ANCHOR TYPE AND EDGE DISTANCE. SELECT DESIGN LOAD GREATER THAN OR EQUAL TO NEGATIVE DESIGN LOAD ON SHUTTER AND SELECT SPAN GREATER THAN OR EQUAL TO SHUTTER SPAN.
3. SEE MOUNTING SECTION DETAILS FOR IDENTIFICATION OF CONNECTION TYPE.
4. EXISTING STRUCTURE MAY BE CONCRETE, HOLLOW CONCRETE BLOCK OR WOOD FRAMING. REFERENCE ANCHOR SCHEDULE FOR PROPER ANCHOR TYPE BASED ON TYPE OF EXISTING STRUCTURE.
5. ANCHORS SHALL BE INSTALLED IN ACCORDANCE WITH MANUFACTURERS' RECOMMENDATIONS.
6. MINIMUM EMBEDMENT AND EDGE DISTANCE EXCLUDES WALL FINISH OR STUCCO.
7. WHERE EXISTING STRUCTURE IS WOOD FRAMING, WOOD FRAMING CONDITIONS VARY. FIELD VERIFY THAT FASTENERS ARE INTO ADEQUATE WOOD FRAMING MEMBERS, NOT PLYWOOD. FASTENING TO PLYWOOD IS ACCEPTABLE ONLY FOR SIDE CLOSURE PIECES.
8. WHERE LAG SCREWS FASTEN TO NARROW FACE OF STUD FRAMING, FASTENER SHALL BE LOCATED IN CENTER OF NOMINAL 2" x 4" (MIN.) WOOD STUD. 3/4" EDGE DISTANCE IS ACCEPTABLE FOR WOOD FRAMING. WOOD STUD SHALL BE "SOUTHERN PINE" G=0.55 OR GREATER DENSITY. LAG SCREWS SHALL HAVE PHILLIPS PAN HEAD OR HEX HEAD.
9. MACHINE SCREWS SHALL HAVE MINIMUM OF 1/2" ENGAGEMENT OF THREADS IN BASE ANCHOR AND MAY HAVE EITHER A PAN HEAD, TRUSS HEAD, OR WAFER HEAD (SIDEWALK BOLT), U.O.N.
10. ▨ DESIGNATES ANCHOR CONDITIONS WHICH ARE NOT ACCEPTABLE USES.
11. * DESIGNATES ANCHORS WHICH ARE REMOVABLE BY REMOVING MACHINE SCREW, NUT OR WASHERED WINGNUT.
12. ALL POINTS SOLID SET AND POWERS CALK-IN ANCHORS MAY ONLY BE USED IN CONCRETE WALLS, HOLLOW CONCRETE BLOCK WALLS OR CONCRETE SLABS ON GRADE.
13. FOR ELCO CRETEFLEX SS4, CONCRETE STRENGTH, Fc=3.5 KSI. FOR ITW TAPCON, CONCRETE STRENGTH, Fc=3.2 KSI. FOR ALL OTHERS CONCRETE STRENGTH, Fc<= 3 KSI.

PRODUCT RENEWED
as complying with the Florida Building Code
Acceptance No 10-0929.04
Expiration Date 11/16/2015
By Helena A. Melo
Miami Dade Product Control Division

PRODUCT REVISED
as complying with the Florida Buiding Code
Acceptance No 09-0114.05
Expiration Date 11/16/2010
By Helena A. Melo
Miami Dade Product Control Division

KNEZEVICH ASSOCIATES
Consulting Engineers
2590 S.W. 53rd Terrace, Fort Lauderdale, Florida 33324
T (954) 821-6933 * F (954) 452-7960 * COA 27989
website: www.Knezevich.com * email: VJK@Knezevich.com

Copyright ©2008 V.J.Knezevich & Associates, LLC d/b/a Knezevich Associates

TownCountry INDUSTRIES
Wholesale Aluminum and Building Products
400 WEST MCNAB ROAD
FORT LAUDERDALE, FL. 33309
PHONE 954.970.9999 FAX 954-970-0988

revisions			
no	date	by	description

V.J. Knezevich
Professional Engineer
FL License No.: PE 0010983
FLORIDA COA No.: 27989

Sept 3, 2008

drawn by	scale
wbs	AS NOTED
date 05/15/2008	
project no. 08-351	

0.050" ALUMINUM STORM PANEL

TABLE 2

MINIMUM STORM PANEL SEPARATION FROM GLASS			
		COLUMN 1	COLUMN 2
POSITIVE DESIGN LOAD (W) (P.S.F.)	ACTUAL SPAN (L) (FT - IN)	MIN. SEP. FOR ALL INSTALLATIONS LESS THAN 30' ABOVE GRADE (INCHES)	MIN. SEP. FOR ALL INSTALLATIONS GREATER THAN 30' ABOVE GRADE (INCHES)
40.0	8-8	3	2-1/4
	10-6	5	3-3/8
50.0	8-8	3	2-1/2
	9-10	5	3-1/4
60.0	8-8	3	2-3/4
	9-5	5	3-1/4
70.0	4-0	3	1-1/2
	8-8	3	3
	9-0	5	3-1/4
80.0	4-0	3	1-1/2
	8-4	3	3
90.0	4-0	3	1-1/2
	7-9	3	2-3/4
100.0	4-0	3	1-1/2
	7-3	3	2-1/2
110.0	4-0	3	1-1/2
	6-9	3	2-3/8
120.0	3-0	3	1-1/2
	6-4	3	2-1/4

TABLE 1 NOTES:

1. DETERMINE BOTH THE POSITIVE AND THE NEGATIVE WIND LOADS. CHECK THEIR RESPECTIVE SPANS AND USE THE LESSER SPAN VALUE OF THE TWO.
2. FOR DESIGN LOADS BETWEEN TABULATED VALUES USE NEXT HIGHER LOAD OR LINEAR INTERPOLATION MAY BE USED TO DETERMINE ALLOWABLE SPANS.

TABLE 2 NOTE:

1. ENTER TABLE 2 WITH POSITIVE DESIGN LOAD TO DETERMINE MIN. STORM SHUTTER SEPARATION FROM GLASS.

TABLE 1

MAX. ALLOWABLE STORM PANEL SPAN SCHEDULE		
POSITIVE OR NEGATIVE DESIGN LOAD (P.S.F.)	SPAN FOR NEG PRESSURE (FT - IN)	SPAN FOR POS PRESSURE (FT - IN)
40.0	12'-0"	10'-4"
45.0	11'-3"	10'-1"
50.0	10'-8"	9'-9"
55.0	10'-2"	9'-6"
60.0	9'-9"	9'-3"
62.0	9'-7"	9'-1"
65.0	9'-4"	8'-11"
70.0	9'-0"	8'-7"
72.0	8'-11"	8'-4"
75.0	8'-8"	8'-0"
80.0	8'-3"	7'-6"
90.0	7'-4"	6'-8"
100.0	6'-7"	6'-0"
110.0	6'-0"	5'-5"
120.0	5'-6"	5'-0"
130.0	5'-1"	4'-7"
140.0	4'-8"	4'-3"
150.0	4'-4"	4'-0"

PRODUCT RENEWED
as complying with the Florida
Building Code
Acceptance No 10-0929.04
Expiration Date 11/16/2015
By
Miami Dade Product Control
Division

PRODUCT REVISED
as complying with the Florida
Buiding Code
Acceptance No 09-0114.05
Expiration Date 11/16/2010
By
Miami Dade Product Control
Division

KNEZEVICH ASSOCIATES
Consulting Engineers
2590 S.W. 105th Terrace * Davie, Florida 33324
T (954) 821-6933 * F (954) 452-7960 * COA 27989
website: www.Knezevich.com * email: VJK@Knezevich.com

Copyright ©2008 VJKnezevich & Associates, LLC d/b/a Knezevich Associates

Town&Country INDUSTRIES
Wholesale Aluminum and Building Products
400 West McNab Road
Fort Lauderdale, FL 33309
PHONE 954.970.9999 FAX 954-970-9988

revisions

no	date	by	description

V.J. Knezevich
Professional Engineer
FL License No.: PE 0010983
FLORIDA COA No. 27989

Sept 3, 2008

drawn by WDS
scale AS NOTED
date 05/15/2008
project no. 08-351