MIAMI-DADE COUNTY
BUILDING AND NEIGHBORHOOD COMPLIANCE DEPARTMENT (BNC)
BOARD AND CODE ADMINISTRATION DIVISION

MIAMI-DADE COUNTY
PRODUCT CONTROL SECTION
11805 SW 26 Street, Room 208
Miami, Florida 33175-2474
T (786) 315-2590 F (786) 315-2599
www.miamidade.gov/building/home/asp

NOTICE OF ACCEPTANCE (NOA)

K P Building Products, Inc.
402 Boyer Street
Williston, VT 05495

SCOPE: This NOA is being issued under the applicable rules and regulations governing the use of construction materials. The documentation submitted has been reviewed by Miami-Dade County Product Control Section and accepted by the Board of Rules and Appeals (BORA) to be used in Miami Dade County and other areas where allowed by the Authority Having Jurisdiction (AHJ).

This NOA shall not be valid after the expiration date stated below. The Miami-Dade County Product Control Section (In Miami-Dade County) and/or the AHJ (in areas other than Miami-Dade County) reserve the right to have this product or material tested for quality assurance purposes. If this product or material fails to perform in the accepted manner, the manufacturer will incur the expense of such testing and the AHJ may immediately revoke, modify, or suspend the use of such product or material within their jurisdiction. BORA reserves the right to revoke this acceptance, if it is determined by Miami-Dade County Product Control Section that this product or material fails to meet the requirements of the applicable building code. This product is approved as described herein, and has been designed to comply with the Florida Building Code, including the High Velocity Hurricane Zone.

DESCRIPTION: Vinyl Soffit

APPROVAL DOCUMENT: Drawing No. **KPBP0002**, titled "Vinyl (PVC) Soffit with ½" and 5/8" J-Channel" sheets 1 through 6 of 6, dated 09/22/10, prepared by PTC, LLC, signed and sealed by Robert J. Amoruso, P.E., bearing the Miami-Dade County Product Control Renewal stamp with the Notice of Acceptance number and expiration date by the Miami-Dade County Product Control Section.

MISSILE IMPACT RATING: None

LABELING: Each unit shall bear a permanent label with the manufacturer's name or logo, Acton, Ontario, Canada or Holly Springs, MS and following statement: "Miami-Dade County Product Control Approved", unless otherwise noted herein.

RENEWAL of this NOA shall be considered after a renewal application has been filed and there has been no change in the applicable building code negatively affecting the performance of this product.

TERMINATION of this NOA will occur after the expiration date or if there has been a revision or change in the materials, use, and/or manufacture of the product or process. Misuse of this NOA as an endorsement of any product, for sales, advertising or any other purposes shall automatically terminate this NOA. Failure to comply with any section of this NOA shall be cause for termination and removal of NOA.

ADVERTISEMENT: The NOA number preceded by the words Miami-Dade County, Florida, and followed by the expiration date may be displayed in advertising literature. If any portion of the NOA is displayed, then it shall be done in its entirety.

INSPECTION: A copy of this entire NOA shall be provided to the user by the manufacturer or its distributors and shall be available for inspection at the job site at the request of the Building Official.

This NOA **renews** and **revises NOA # 09-0901.06** and consists of this page 1 and evidence page E-1, as well as approval document mentioned above.

The submitted documentation was reviewed by **Carlos M. Utrera, P.E.**

MIAMI-DADE COUNTY APPROVED

12/15/10

NOTICE OF ACCEPTANCE: EVIDENCE SUBMITTED

A. DRAWINGS

1. Drawing No. **KPBP0002**, titled "Vinyl (PVC) Soffit with ½" and 5/8" J-Channel" sheets 1 through 6 of 6, dated 09/22/10, prepared by PTC, LLC, signed and sealed by Robert J. Amoruso, P.E.

B. TESTS

	Test Report No.	Standard	Date	Signature
1.	98588.01-109-18	TAS 202 and 203	06/15/10	Michael D. Stremmel, P.E.
2.	98584.01-109-18	TAS 202 and 203	06/14/10	Michael D. Stremmel, P.E.
3.	94119.01-106-18	ASTM D3679, D4226, D696, D2457, D2244, D1929, D2843 and D635	06/01/10	Joseph A. Reed, P.E.
	"Submitted under NOA # 03-0303.12"			
4.	RAD 2132	ASTM G26 & D638	12/1998	R. F. Tucker, P.E.

C. CALCULATIONS:

1. Anchor verification calculations, complying with FBC-2007, prepared by PTC, LLC, dated 09/22/10, signed and sealed by Robert J. Amoruso, P.E.

D. QUALITY ASSURANCE

1. Miami-Dade Building and Neighborhood Compliance Department (BNC)

E. MATERIAL CERTIFICATIONS

1. None.

F. STATEMENTS

1. Statement letter of code conformance with FBC 2007 and no financial interest, dated 09/24/10, signed and sealed by Robert J. Amoruso, P.E.
2. Laboratory compliance (with FBC 2007) letters, issued by Architectural Testing, Inc., dated, signed and sealed as all the test reports listed above (Section B).

12/15/10

Carlos M. Utrera, P.E.
Product Control Examiner
NOA No. 10-1012.07
Expiration Date: November 11, 2015
Approval Date: January 06, 2011

KP BUILDING PRODUCTS

VINYL PVC SOFFIT WITH 1/2" & 5/8" J-CHANNEL

INSTALLATION ANCHORAGE DETAILS

GENERAL NOTES:

1. THIS PRODUCT HAS BEEN TESTED AND DESIGNED TO COMPLY WITH THE 2007 FLORIDA BUILDING CODE (FBC) INCLUDING THOSE SECTIONS OF THE FBC PERTAINING TO THE HIGH VELOCITY HURRICANE ZONE (HVHZ) AT THE DESIGN PRESSURE(S) STATED HEREIN. THE PRODUCT WAS TESTED TO TAS-202 AND TAS-203. IMPACT TESTING TO TAS-201 IS NOT RQUIRED FOR SOFFIT.
2. THE PRODUCT DETAILS CONTAINED HEREIN ARE BASED UPON SIGNED AND SEALED ARCHITECTURAL TESTING REPORT #98588.01-109-18 DATED 06/15/10 AND #98584.01-109-18 DATED 06/14/10, INCLUDING ASSOCIATED LABORATORY STAMPED DRAWINGS.
3. ADEQUACY OF THE EXISTING STRUCTURAL CONCRETE, MASONRY AND WOOD FRAMING COMPRISING THE ATTACHMENT SUBSTRATE FOR THE SOFFIT SHALL BE DETERMINED TO BE CAPABLE OF WITHSTANDING AND TRANSFERRING APPLIED PRODUCT LOADS TO THAT STRUCTURE AND IS THE RESPONSIBILITY OF THE ARCHITECT OR ENGINEER OF RECORD FOR THE PROJECT.
4. OVERHANG RECEIVING VINYL SOFFIT SHALL BE CHECKED FOR STRUCTURAL INADEQUACY, CRACKS OR DEFECTS THAT SHALL BE ELIMINATED.
5. INSTALLATION OF SOFFIT ACCESSORIES AND ACCESSORIES SUCH AS CORNER POSTS, STARTER STRIPS, AND TRIM AROUND OPENINGS SHALL BE DONE IN ACCORDANCE WITH THE FLORIDA BUIDLING CODE AND THE MANUFACTURER'S INSTRUCTIONS.
6. SITE CONDITIONS THAT DEVIATE FROM THE DETAILS OF THIS DRAWING REQUIRE FURTHER ENGINEERING EVALUATION BY A LICENSED ENGINEER OR REGISTERED ARCHITECT.

INSTALLATION NOTES:

1. ANCHORS SHALL BE THE TYPE, SIZE, EMBEDMENT AND EDGE DISTANCE SHOWN HEREIN FOR RESPECTIVE SUBSTRATE.
2. INSTALLATION ANCHORS SHALL BE AS SHOWN ON THE "FURRING INSTALLATION" AND "SOFFIT INSTALLATION" SECTIONS ON SHEETS 2, 3 AND 4.
3. MINIMUM EMBEDMENT AND EDGE DISTANCE EXCLUDE WALL FINISHES (INCLUDING BUT NOT LIMITED TO STUCCO, FOAM, BRICK VENEER AND SIDING).
4. FOR CONCRETE BLOCK, DO NOT INSTALL INSTALLATION ANCHORS INTO MORTAR JOINTS. EDGE DISTANCE IS MEASURED FROM FREE EDGE OF BLOCK OR EDGE OF MORTAR JOINT INTO FACE SHELL OF BLOCK.
5. ALL FASTENERS SHALL HAVE CORROSION RESISTANT COATINGS COMPATIBLE WITH THE SUBSTRATE MATERIALS.

VINYL SOFFIT SPECIFICATIONS:

1. KP BUILDING PRODUCTS VINYL SOFFIT IS MANUFACTURED FROM A FORMULATED PVC POWDER COMPOUND MEETING THE SPECIFICATIONS OF ASTM D3679..
2. 12" BRUSHED SOFFIT - SOLID
   - 2.1. WALL THICKNESS: 0.038"
   - 2.2. PANEL LENGTHS: 12' - 0" LONG
   - 2.3. 1/2" J-CHANNEL THICKNESS: 0.042"
3. 10" I-SPAN SOFFIT (D5) - SOLID
   - 3.1. WALL THICKNESS: 0.046"
   - 3.2. PANEL LENGTHS: 12' - 0" LONG
   - 3.3. 5/8" J-CHANNEL THICKNESS: 0.042"

BILL OF MATERIALS

ITEM	DESCRIPTION	MATERIAL
1	10" I-SPAN SOFFIT W/ 5/8" J CHANNEL	VINYL (PVC)
2	12" WOODGRAIN PLAIN SOFFIT W/ 1/2" J CHANNEL	VINYL (PVC)
3	NOT USED	
4	1/2" J-CHANNEL OR 5/8" J-CHANNEL (SEE ITEM 1 & 2)	VINYL (PVC)
5	0.12" SHANK DIAMETER X 1-1/2" LONG ROOFING NAIL WITH 3/8" DIA. HEAD OF SUFFICIENT LENGTH TO ACHEIVE 1" MINIMUM EMBEDMENT TO ATTACH TO FURRING STRIP.	STEEL
6	0.148" SHANK DIAMETER COMMON NAIL OF SUFFICIENT LENGTH TO ACHIEVE 1-1/2" MIN. EMBEDMENT USED TO ATTACH FURRING STRIP TO FURRING STRIP & 1-3/4" MIN. EMBEDMENT USED TO ATTACH FURRING STRIP TO WOOD STRUCTURE.	STEEL
7	3/16" ITW TAPCON OF SUFFICIENT LENGTH TO ACHIEVE A MINIMUM OF 1-1/4" EMBEDMENT INTO CONCRETE OR MASONRY (CBS) SUBSTRATE.	STEEL

TABLE OF CONTENTS

SHEET NO.	DESCRIPTION
1	GENERAL NOTES, B.O.M. AND D.P. CHART
2	APPROVED SOFFIT PROFILES
3	FURRING INSTALLATION UP TO 12" DEEP OVERHANG
4	FURRING INSTALLATION UP TO 24" DEEP OVERHANG
5	SOFFIT INSTALLATION UP TO 12" DEEP OVERHANG
6	SOFFIT INSTALLATION UP TO 24" DEEP OVERHANG

DESIGN PRESSURE (PSF) RATING

SOFFIT MODEL	DESIGN PRESSURE (PSF)
10" I-SPAN SOFFIT W 5/8" J CHANNEL	+100 psf -42 psf
12" WOODGRAIN PLAIN SOFFIT W 1/2" J CHANNEL	+100 psf -44 psf

PROJECT #310-0710

REV	DESCRIPTION	DATE	BY

KP BUILDING PRODUCTS
402 BOYER CIRCLE
WILLISTON, VT 05495

TITLE: VINYL PVC SOFFIT WITH 1/2" AND 5/8" J-CHANNEL GENERAL NOTES, B.O.M. AND D.P. CHART

DRAWN BY: RJA
DATE: 09/22/10
SCALE: N.T.S.
DRAWING NO: KPBP0002
REV: -
SHEET: 1 OF 6

PREPARED BY:

PTC, LLC
P.O. Box 520775
Longwood, FL 32752-0775
FBPE Cert. of Auth. No. 29935
Phone: 321.690.1788
Fax: 321.690.1789
Email: info@ptc-corp.com

PRODUCT REVISED
as complying wnn the Florida Building Code
Acceptance No 10-1012.07
Expiration Date 11/11/2015
By
Miami Dade Product Control Division

Robert J. Amoruso, P.E.
Florida P.E. No. 49752

ROBERT JAMES AMORUSO
LICENSE
No 49752
9/24/10
STATE OF FLORIDA
PROFESSIONAL ENGINEER

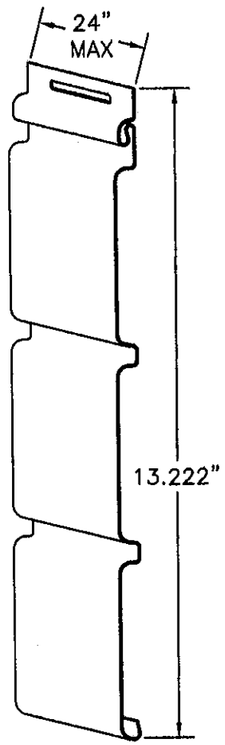

12" BRUSHED SOFFIT – SOLID
(MAX 24" AS SOFFIT)

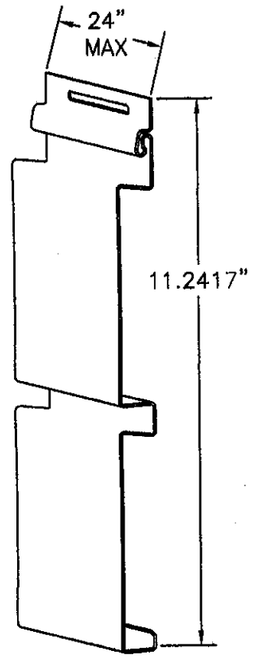

10" I-SPAN SOFFIT – SOLID (D5)
(MAX 24" AS SOFFIT)

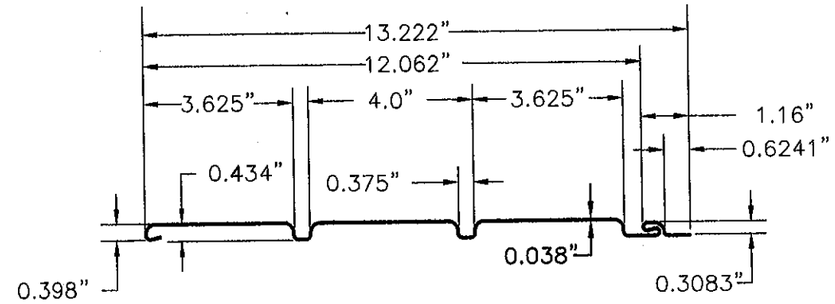

12" BRUSHED SOFFIT – SOLID
0.036" WALL x 8-0" LONG PANEL

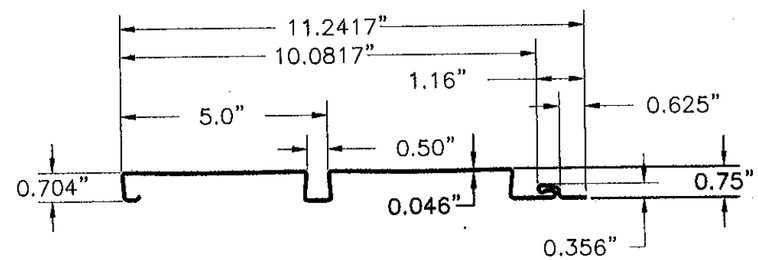

10" I-SPAN SOFFIT – SOLID (D5)
0.046" WALL x 8-0" LONG PANEL

APPROVED SOFFIT PROFILE DIMENSIONS

PROJECT #310-0710

REV	DESCRIPTION	DATE	BY

KP BUILDING PRODUCTS
402 BOYER CIRCLE
WILLISTON, VT 05495

TITLE: VINYL PVC SOFFIT WITH 1/2" AND 5/8" J-CHANNEL APPROVED SOFFIT PROFILES

PREPARED BY: PTC, LLC
P.O. Box 520775
Longwood, FL 37252-0775
FBPE Cert. of Auth. No. 25935
Phone: 321.690.1788
Fax: 321.690.1789
Email: info@ptc-corp.com

DRAWN BY: RJA
SCALE: N.T.S.
REV: -
DATE: 09/22/10
DRAWING NO: KPBP0002
SHEET: 2 OF 6

PRODUCT REVISED
as complying with the Florida Building Code
Acceptance No 10-1012.07
Expiration Date 11/11/2015
By
Miami Dade Product Control Division

Robert J. Amoruso, P.E.
Florida P.E. No. 49752

ROBERT JAMES AMORUSO
LICENSE
No 49752
9/24/10
STATE OF FLORIDA
PROFESSIONAL ENGINEER

FURRING INSTALLATION FOR UP TO 12" DEEP ROOF OVERHANG

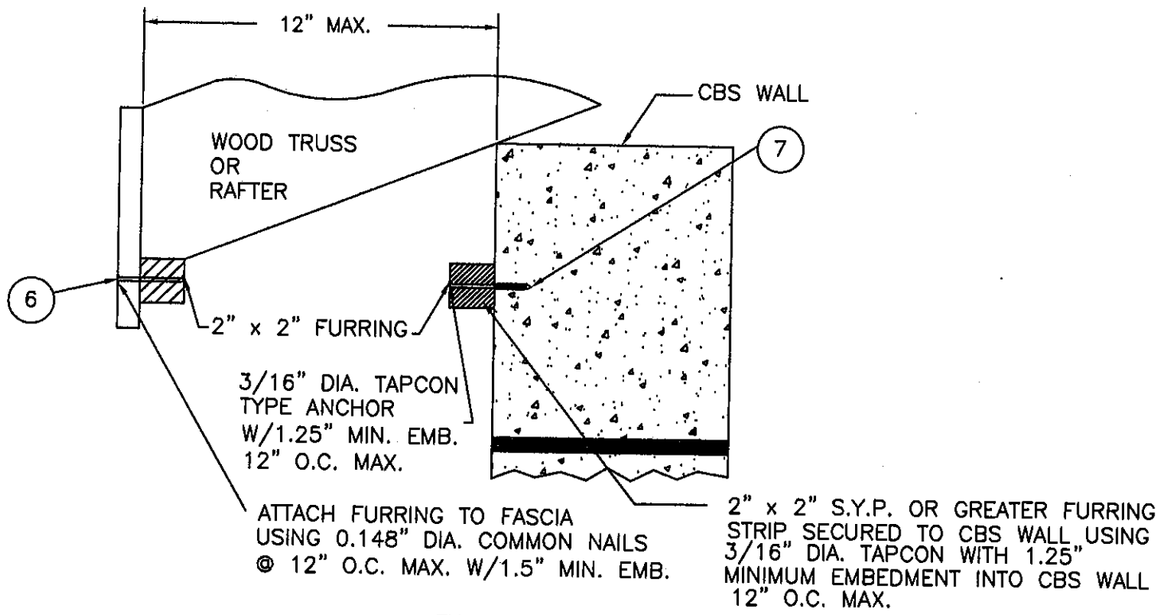

FURRING INSTALLATION ON A CBS OVERHANG

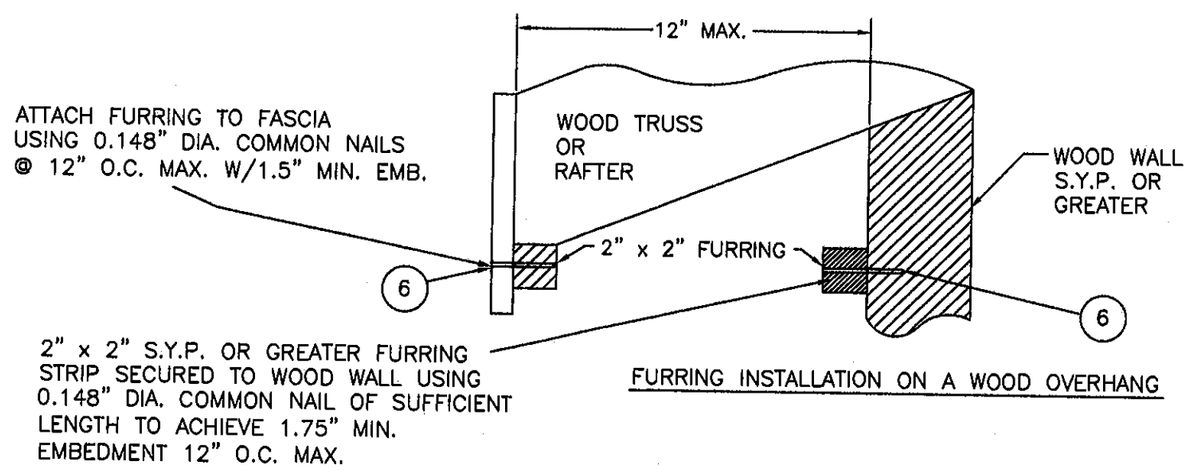

FURRING INSTALLATION ON A WOOD OVERHANG

PROJECT #310-0710

REV	DESCRIPTION	DATE	BY

KP BUILDING PRODUCTS
402 BOYER CIRCLE
WILLISTON, VT 05495

TITLE: VINYL PVC SOFFIT WITH 1/2" AND 5/8" J-CHANNEL FURRING INSTALLATION UP TO 12" DEEP OVERHANG

DRAWN BY: RJA
DATE: 09/22/10
SCALE: N.T.S.
DRAWING NO: KPBP0002
REV: -
SHEET: 3 OF 6

PREPARED BY:
PTC, LLC
P.O. Box 520775
Longwood, FL 32752-0775
FBPE Cert. of Auth. No. 29935
Phone: 321.690.1786
Fax: 321.690.1789
Email: info@ptc-corp.com

PRODUCT REVISED
as complying with the Florida Building Code
Acceptance No 10-1012.07
Expiration Date 11/11/2015
By
Miami Dade Product Control Division

Robert J. Amoruso, P.E.
Florida P.E. No. 49752

ROBERT JAMES AMORUSO
LICENSE
No 49752
9/24/10
STATE OF
FLORIDA
PROFESSIONAL ENGINEER

FURRING INSTALLATION FOR UP TO 24" DEEP ROOF OVERHANG

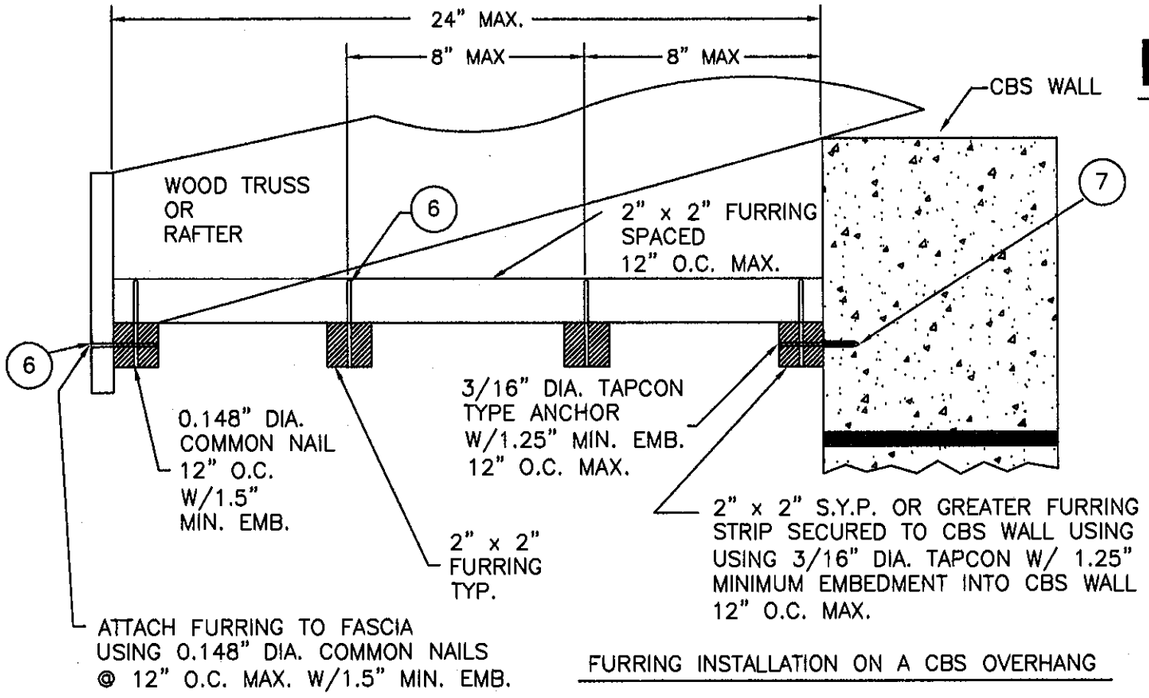

FURRING INSTALLATION ON A CBS OVERHANG

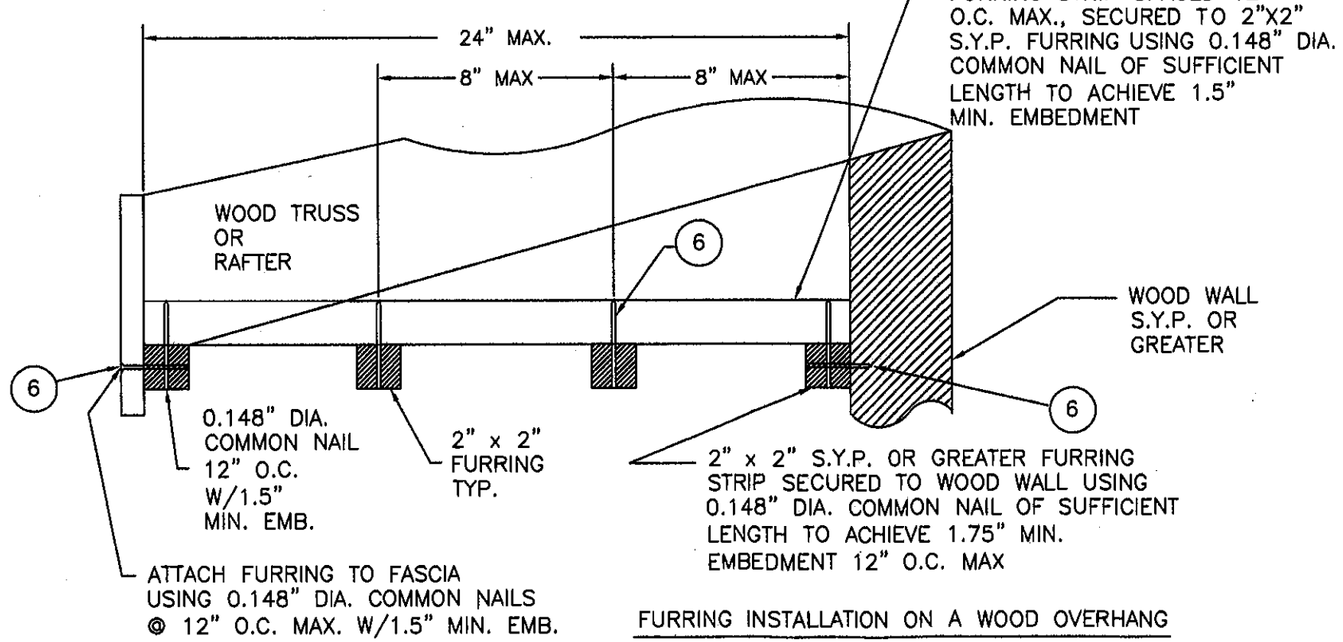

FURRING INSTALLATION ON A WOOD OVERHANG

PROJECT #310-0710

REV	DESCRIPTION	DATE	BY

KP BUILDING PRODUCTS
402 BOYER CIRCLE
WILLISTON, VT 05495

TITLE: VINYL PVC SOFFIT WITH 1/2" AND 5/8" J-CHANNEL FURRING INSTALLATION UP TO 24" DEEP OVERHANG

DATE: 09/22/10
DRAWN BY: RJA
DRAWING NO: KPBP0002
SCALE: N.T.S.
SHEET: 4 OF 6
REV: -

PREPARED BY:
FTC, LLC
P.O. Box 520775
Longwood, FL 32752-0775
FBPE Cert. of Auth. No. 23235
Phone: 321.690.1788
Fax: 321.690.1789
Email: info@ftc-corp.com

PRODUCT REVISED
as complying with the Florida Building Code
Acceptance No 10-1012.07
Expiration Date 11/11/2015
By
Miami Dade Product Control Division

Robert J. Amoruso, P.E.
Florida P.E. No. 49752

ROBERT JAMES AMORUSO
LICENSE
No 49752
STATE OF FLORIDA
PROFESSIONAL ENGINEER
9/24/10

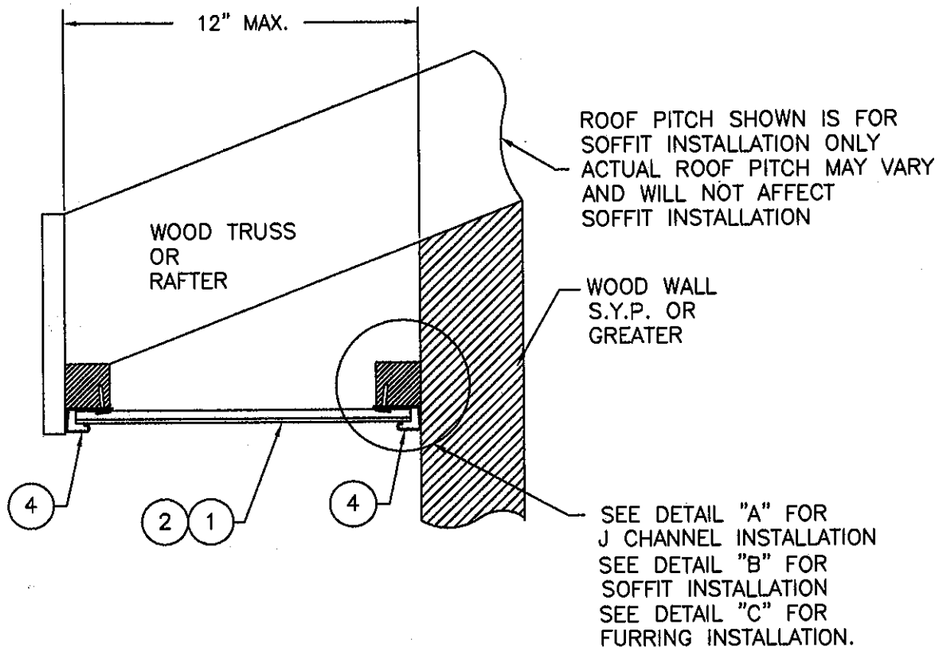

FURRING INSTALLATION ON A WOOD OVERHANG

FOR FURRING INSTALLATION SEE SHEET 3

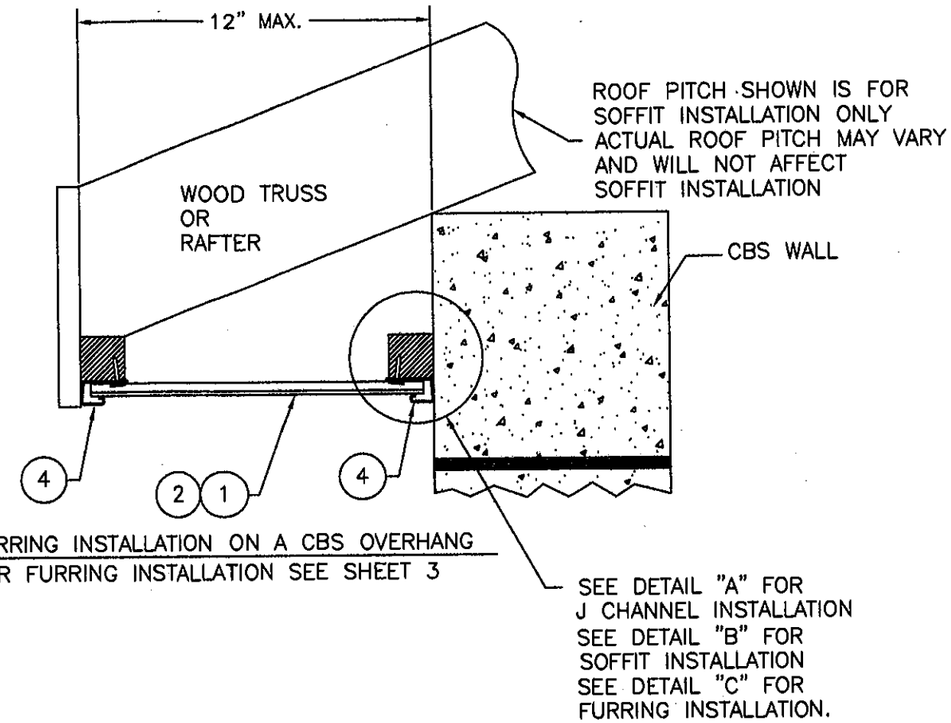

FURRING INSTALLATION ON A CBS OVERHANG

FOR FURRING INSTALLATION SEE SHEET 3

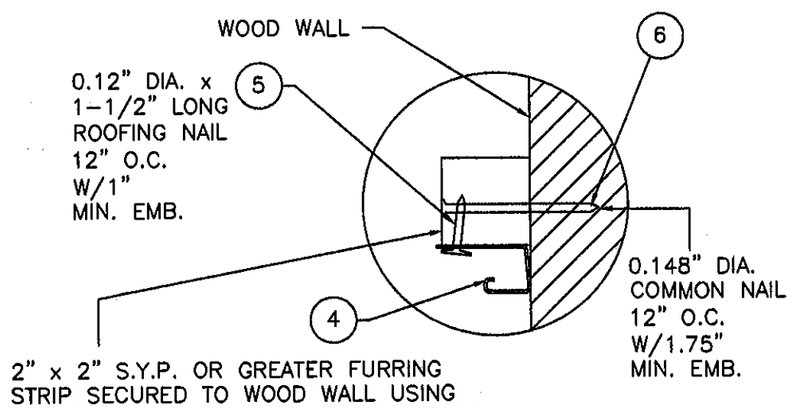

DETAIL "A"

J CHANNEL INSTALLATION

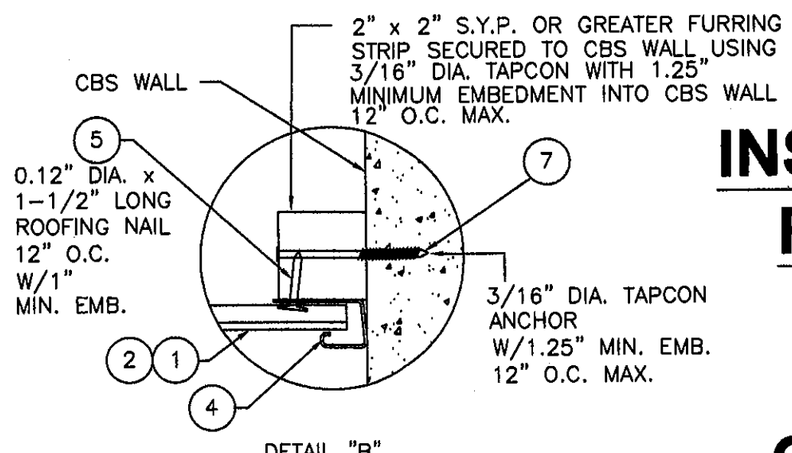

DETAIL "B"

SOFFIT INSTALLATION

SOFFIT INSTALLATION FOR UP TO 12" DEEP ROOF OVERHANG

REV	DESCRIPTION	DATE	BY

PROJECT #310-0710

KP BUILDING PRODUCTS
402 BOYER CIRCLE
WILLISTON, VT 05495

TITLE: VINYL PVC SOFFIT WITH 1/2" AND 5/8" J-CHANNEL SOFFIT INSTALLATION UP TO 12" DEEP OVERHANG

PREPARED BY:
PTC, LLC
P.O. Box 520775
Longwood, FL 32752-0775
FBPE Cert. of Auth. No. 29325
Phone: 321.690.1788
Fax: 321.690.1789
Email: info@ptc-corp.com

DRAWN BY: RJA
DATE: 09/22/10
SCALE: N.T.S.
DRAWING NO: KPBP0002
REV: -
SHEET: 5 OF 6

PRODUCT REVISED
as complying with the Florida Building Code
Acceptance No 10-1012.07
Expiration Date 11/11/2015
By
Miami Dade Product Control Division

Robert J. Amoruso, P.E.
Florida P.E. No. 49752

ROBERT JAMES AMORUSO
LICENSE
No 49752
STATE OF FLORIDA
PROFESSIONAL ENGINEER
9/24/10

SOFFIT INSTALLATION FOR UP TO 24" DEEP ROOF OVERHANG

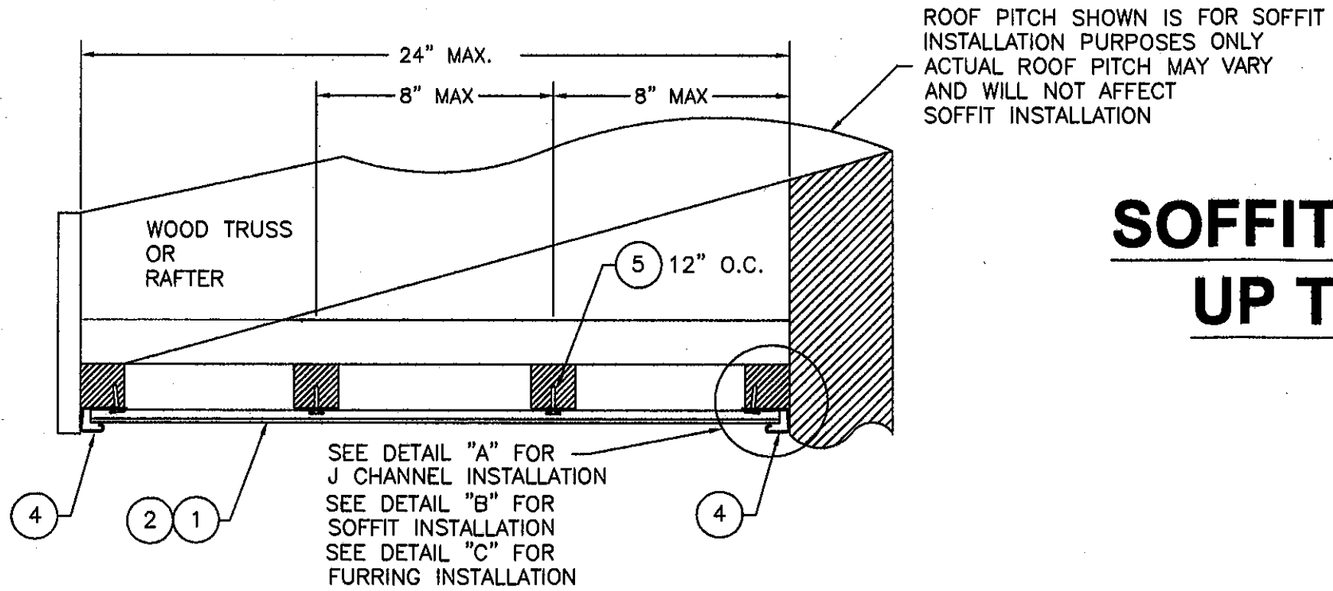

TYP. INSTALLATION ON A WOOD OVERHANG

FOR FURRING INSTALLATION SEE SHEET 4

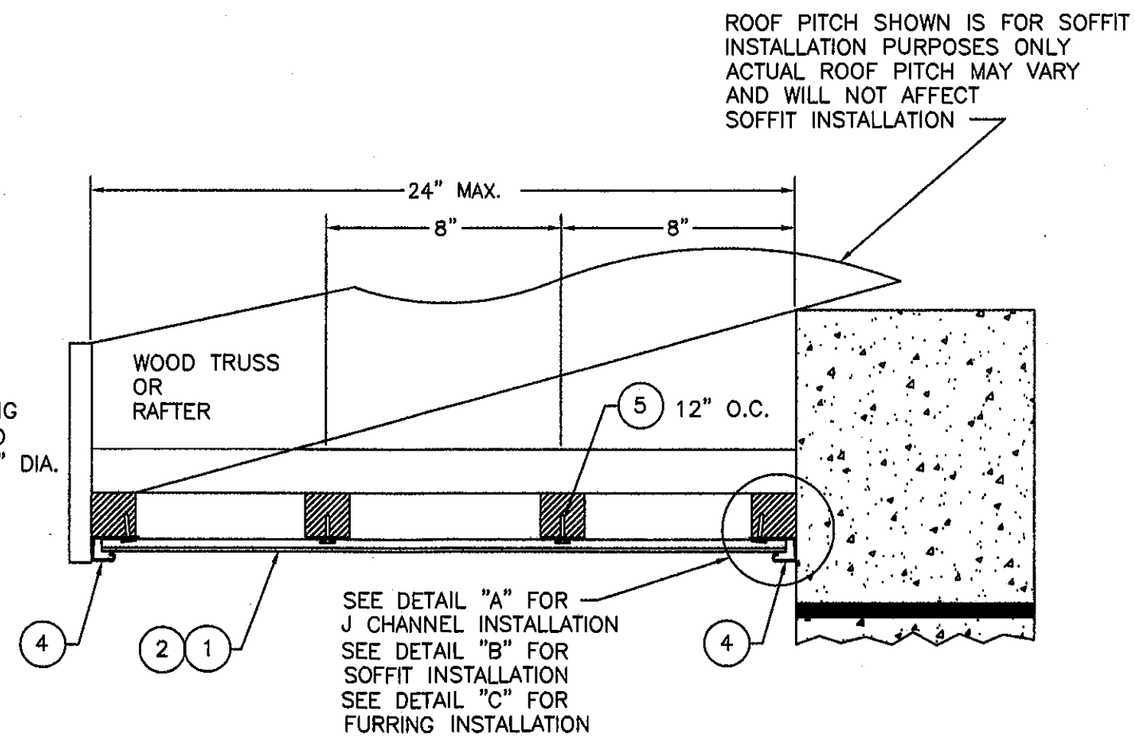

TYP. INSTALLATION ON A CBS OVERHANG

FOR FURRING INSTALLATION SEE SHEET 4

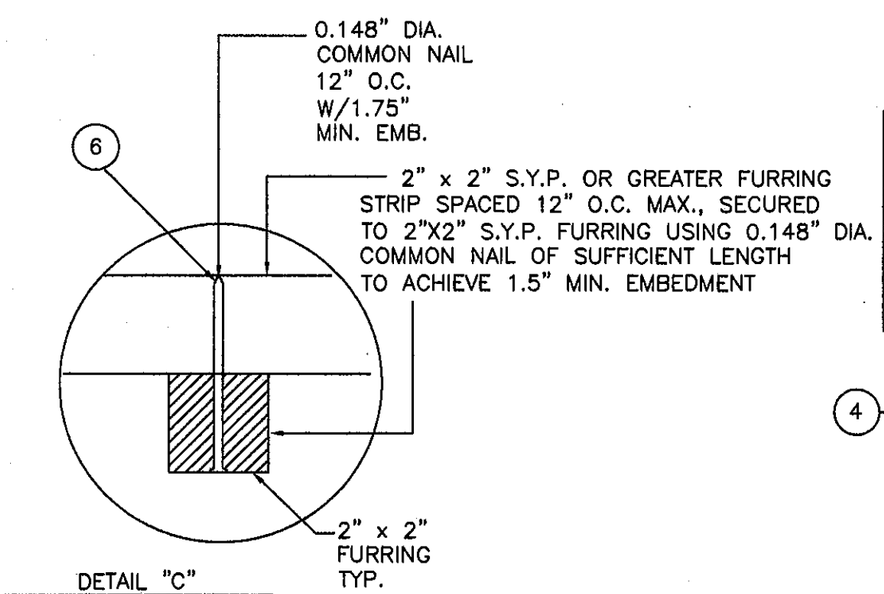

DETAIL "C"

FURRING STRIP ATTACHMENT

PROJECT #310-0710

REV	DESCRIPTION	DATE	BY

KP BUILDING PRODUCTS
402 BOYER CIRCLE
WILLISTON, VT 05495

TITLE: VINYL PVC SOFFIT WITH 1/2" AND 5/8" J-CHANNEL SOFFIT INSTALLATION UP TO 24" DEEP OVERHANG

PREPARED BY:
PTC, LLC
P.O. Box 520775
Longwood, FL 32752-0775
FBPE Cert. of Auth. No. 29305
Phone: 321.690.1788
Fax: 321.690.1789
Email: info@ptc-corp.com

DRAWN BY:	DATE:
RJA	09/22/10
SCALE: N.T.S.	DRAWING NO: KPBP0002
REV: -	SHEET: 6 OF 6

PRODUCT REVISED
as complying with the Florida Building Code
Acceptance No 10-1012.07
Expiration Date 11/11/2015
By
Miami Dade Product Control Division

Robert J. Amoruso, P.E.
Florida P.E. No. 49752

ROBERT JAMES AMORUSO
LICENSE
No 49752
STATE OF FLORIDA
PROFESSIONAL ENGINEER
9/24/10