MIAMI-DADE COUNTY

BUILDING AND NEIGHBORHOOD COMPLIANCE DEPARTMENT (BNC)
BOARD AND CODE ADMINISTRATION DIVISION

MIAMI-DADE COUNTY
PRODUCT CONTROL SECTION
11805 SW 26 Street, Room 208
Miami, Florida 33175-2474
T (786) 315-2590 F (786) 315-2599
www.miamidade.gov/building/

NOTICE OF ACCEPTANCE (NOA)

Firestone Building Products Company, LLC.
250 W 96 Street
Indianapolis, IN. 46260

SCOPE:

This NOA is being issued under the applicable rules and regulations governing the use of construction materials. The documentation submitted has been reviewed by Miami-Dade County Product Control Section and accepted by the Board of Rules and Appeals (BORA) to be used in Miami Dade County and other areas where allowed by the Authority Having Jurisdiction (AHJ).

This NOA shall not be valid after the expiration date stated below. The Miami-Dade County Product Control Section (In Miami Dade County) and/or the AHJ (in areas other than Miami Dade County) reserve the right to have this product or material tested for quality assurance purposes. If this product or material fails to perform in the accepted manner, the manufacturer will incur the expense of such testing and the AHJ may immediately revoke, modify, or suspend the use of such product or material within their jurisdiction. BORA reserves the right to revoke this acceptance, if it is determined by Miami-Dade County Product Control Section that this product or material fails to meet the requirements of the applicable building code.
This product is approved as described herein, and has been designed to comply with the Florida Building Code including the High Velocity Hurricane Zone of the Florida Building Code.

DESCRIPTION: UC3 Aluminum Panels

LABELING: Each unit shall bear a permanent label with the manufacturer's name or logo, city, state and following statement: "Miami-Dade County Product Control Approved", unless otherwise noted herein.

RENEWAL of this NOA shall be considered after a renewal application has been filed and there has been no change in the applicable building code negatively affecting the performance of this product.

TERMINATION of this NOA will occur after the expiration date or if there has been a revision or change in the materials, use, and/or manufacture of the product or process. Misuse of this NOA as an endorsement of any product, for sales, advertising or any other purposes shall automatically terminate this NOA. Failure to comply with any section of this NOA shall be cause for termination and removal of NOA.

ADVERTISEMENT: The NOA number preceded by the words Miami-Dade County, Florida, and followed by the expiration date may be displayed in advertising literature. If any portion of the NOA is displayed, then it shall be done in its entirety.

INSPECTION: A copy of this entire NOA shall be provided to the user by the manufacturer or its distributors and shall be available for inspection at the job site at the request of the Building Official.

This renews NOA #06-1208.01 and consists of pages 1 through 5.
The submitted documentation was reviewed by Alex Tigera.

MIAMI-DADE COUNTY APPROVED

ROOFING SYSTEM APPROVAL:

Category:	Roofing
Sub-Category:	Metal, Panels(Non-Structural)
Material:	Aluminum
Deck Type:	Wood
Maximum Design Pressure	**-129.25 psf, See System Limitation #2**

TRADE NAMES OF PRODUCTS MANUFACTURED OR LABELED BY APPLICANT:

Product	Dimensions	Test Specifications	Product Description
UC3	l = 119-1/2" maximum w = 24" min. (0.032") (panels are cut to appropriate length)	TAS 110	Corrosion resistant, standing seam, coated, prefinished, & mill finished aluminum panels.
Trim Pieces	l = varies w = varies min. (0.032")	TAS 110	Standard flashing and trim pieces. Manufactured for each panel width.
Panel Clips	26 ga. (0.19") thick x 1½" wide x 1½"high x 1½" long	TAS 114 Appendix E	Corrosion resistant, formed, painted or unpainted stainless steel clips for metal panel installation.
Panel Clips	26 ga. (0.19") thick x ¾" wide x 1½"high x 2" long	TAS 114 Appendix E	Corrosion resistant, formed, painted or unpainted stainless steel clips for metal panel installation.
Two Piece Expansion Panel Clips	24 ga. (.024") thick Base 1" wide x 0.42" high x 5" long 26 ga. (.019") thick Top 1.87" wide x 0.412" high x 3" long	TAS 114 Appendix E	Corrosion resistant, formed, painted or unpainted stainless steel clips for metal panel installation.

EVIDENCE SUBMITTED:

Test Agency	Test Identifier	Test Name/Report	Date
Center For Applied Engineering	MTS 257364	TAS 100	Sep. 1995
Valspar Corporation		ASTM G 23	04/13/05
Hurricane Test Laboratory, Inc.	0227-0823-05	UL 580	11/11/05

APPROVED ASSEMBLIES

SYSTEM A-1S:	UC3 Aluminum Panel
Deck Type:	Wood, Non-insulated
Deck Description:	$^{19}/_{32}$" or greater plywood or wood plank.
Slope Range:	2":12" or greater
Maximum Uplift Pressure:	**See Table 'A' Below**

Deck Attachment: In accordance with applicable Building Code, but in no case shall it be less than 8d annular ring shank nails spaced 6" o.c. In reroofing, where the deck is less than $^{19}/_{32}$" thick (Minimum $^{15}/_{32}$"). The above attachment method must be in addition to existing attachment.

Underlayment: Minimum underlayment shall be a ASTM D 226 Type II installed with a minimum 4" side-laps and 6" end-laps. Underlayment shall be fastened with corrosion resistant tin-caps and 1¼" annular ring-shank nails, spaced 6" o.c. at all laps and two staggered rows 12" o.c. in the field of the roll. Or, any Miami-Dade County Product Control Approved underlayment having a current NOA.

Valleys: Valley construction shall be in compliance with Roofing Application Standard RAS 133 and with Firestone Metal Products' current published installation instructions.

Fire Barrier Board: Any approved fire barrier having a current NOA. Or for class A or B fire rating, install minimum ¼" thick Georgia Pacific "Dens Deck" (with current NOA) or loose lay one layer of Elk's "Versa Shield" (with current NOA) or minimum 4mm thick of Tritex, RockRoof (with current NOA) or $^{5}/_{8}$" water resistant type X gypsum sheathing with treated core and facer.

Metal Panels and Accessories: Install the "UC3 Panels" and accessories in compliance with Firestone Metal Products' current, published installation instructions and details. Flashing, penetrations, valley construction and other details shall be constructed in compliance with the minimum requirements provided in Roofing Application Standards RAS 133.

1. Panels shall be installed with approved clips 2" from the panel ends and shall be at a maximum spacing noted in Table A.
2. Clips are to be attached to substrate with (1) one corrosion resistant (stainless steel) #10 screws for field area of roof. Expansion two-piece clips shall be attached with (2) two (stainless steel) #10 screws in all roof areas (i.e. field, perimeter and corner). Fasteners shall be of sufficient length to penetrate through the sheathing a minimum of $^{3}/_{16}$".
3. Standing seams shall be manually or mechanically seamed. See Table A, and Profile Drawing for seam detail.

TABLE A
MAXIMUM DESIGN PRESSURES

Roof Areas	Field	Perimeter and Corner[1]
Maximum Design Pressures	**-110.5 psf**	**-129.5 psf**
Maximum Clip Spacing	**18" o.c.**	**12" o.c.**

1. Extrapolation shall not be allowed

SYSTEM LIMITATIONS:

1. Fire classification is not part of this acceptance; refer to a current Approved Roofing Materials Directory for fire ratings of this product.

2. The maximum designed pressure limitation listed shall be applicable to all roof pressure zones (i.e. field, perimeters, and corners). Neither rational analysis, nor extrapolation shall be permitted for enhanced fastening at enhanced pressure zones (i.e. perimeters, extended corners and corners). The maximum fastener spacing noted in the "Systems Description" section of this approval shall not be exceeded.

3. Panels shall be roll formed in continuous lengths from eave to ridge. Maximum lengths shall be as described in Roofing Application Standard RAS 133.

4. All panels and clips shall be permanently labeled with the manufacturer's name or logo, city, state and the following statement: "Miami Dade County Product Control Approved".

5. All products listed herein shall have a quality assurance audit in accordance with the Florida Building Code and Rule 9B-72 of the Florida Administrative Code.

PROFILE DRAWINGS
UC3 ALUMINUM PANEL SYSTEM

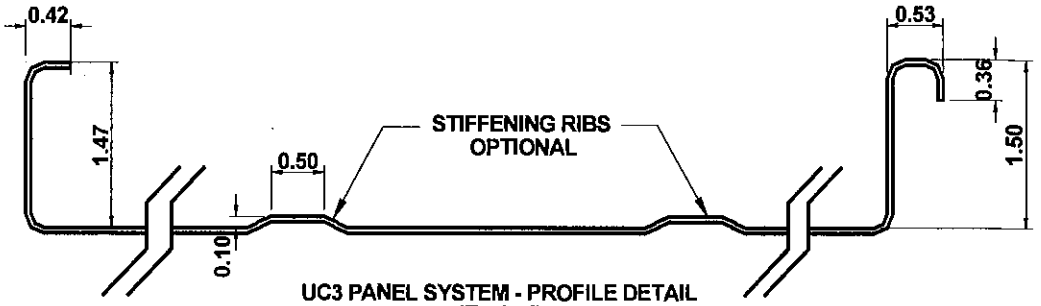

UC3 PANEL SYSTEM - PROFILE DETAIL
(Typical)

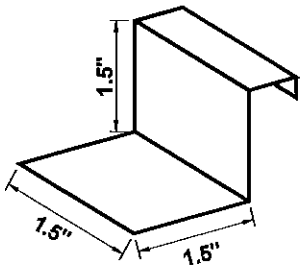

PANEL CLIP

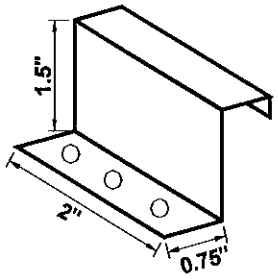

PANEL CLIP

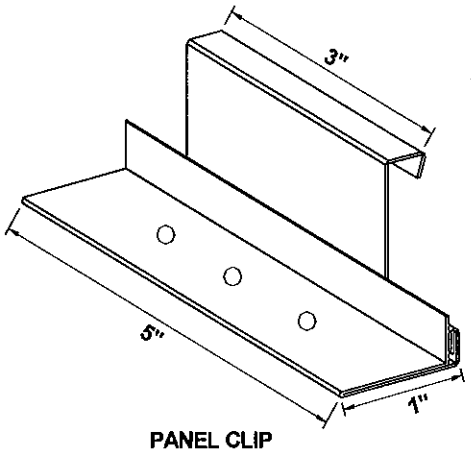

PANEL CLIP

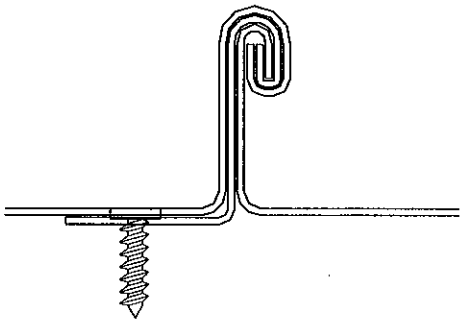

DOUBLE LOCK SEAM
(180 DEGREE)

END OF THIS ACCEPTANCE