MIAMI-DADE COUNTY
BUILDING AND NEIGHBORHOOD COMPLIANCE DEPARTMENT (BNC)
BOARD AND CODE ADMINISTRATION DIVISION

MIAMI-DADE COUNTY
PRODUCT CONTROL SECTION
11805 SW 26 Street, Room 208
Miami, Florida 33175-2474
T (786) 315-2590 F (786) 315-2599
www.miamidade.gov/building

NOTICE OF ACCEPTANCE (NOA)

Master-Bilt
908 Highway 15 North, P.O.Box 59
New Albany, MS 38652

SCOPE:
This NOA is being issued under the applicable rules and regulations governing the use of construction materials. The documentation submitted has been reviewed by Miami-Dade County Product Control Section and accepted by the Board of Rules and Appeals (BORA) to be used in Miami Dade County and other areas where allowed by the Authority Having Jurisdiction (AHJ).

This NOA shall not be valid after the expiration date stated below. The Miami-Dade County Product Control Section (In Miami Dade County) and/or the AHJ (in areas other than Miami Dade County) reserve the right to have this product or material tested for quality assurance purposes. If this product or material fails to perform in the accepted manner, the manufacturer will incur the expense of such testing and the AHJ may immediately revoke, modify, or suspend the use of such product or material within their jurisdiction. BORA reserves the right to revoke this acceptance, if it is determined by Miami-Dade County Product Control Section that this product or material fails to meet the requirements of the applicable building code.

This product is approved as described herein, and has been designed to comply with the High Velocity Hurricane Zone of the Florida Building Code.

DESCRIPTION: Walk-In Refrigeration Units

APPROVAL DOCUMENT: Drawing No. AP-9766, titled " Sample Configuration ", sheets 1 through 7 of 7, prepared by Master-Bilt, dated November 15, 2005, last revision dated August 24, 2006, signed and sealed by Vipin N. Tolat, P.E. on October 18, 2010, bearing the Miami-Dade County Product Control Renewal stamp with the Notice of Acceptance number and the expiration date by the Miami-Dade County Product Control Section.

MISSILE IMPACT RATING: Large and Small Missile Impact Resistant

LABELING: Each unit shall bear a permanent label with the manufacturer's name or logo, city, state and the following statement: "Miami-Dade County Product Control Approved", unless otherwise noted herein.

RENEWAL of this NOA shall be considered after a renewal application has been filed and there has been no change in the applicable building code negatively affecting the performance of this product.

TERMINATION of this NOA will occur after the expiration date or if there has been a revision or change in the materials, use, and/or manufacture of the product or process. Misuse of this NOA as an endorsement of any product, for sales, advertising or any other purposes shall automatically terminate this NOA. Failure to comply with any section of this NOA shall be cause for termination and removal of NOA.

ADVERTISEMENT: The NOA number preceded by the words Miami-Dade County, Florida, and followed by the expiration date may be displayed in advertising literature. If any portion of the NOA is displayed, then it shall be done in its entirety.

INSPECTION: A copy of this entire NOA shall be provided to the user by the manufacturer or its distributors and shall be available for inspection at the job site at the request of the Building Official.

This NOA **renews NOA # 05-1222.05** and consists of this page 1, evidence submitted pages E-1, E-2, & E-3 as well as approval document mentioned above.

The submitted documentation was reviewed by **Helmy A. Makar, P.E., M.S.**

MIAMI-DADE COUNTY APPROVED

Helmy A. Makar
02/10/2011

NOA No. 10-1020.02
Expiration Date: 02/05/2012
Approval Date: 02/10/2011

Master-Bilt

NOTICE OF ACCEPTANCE: EVIDENCE SUBMITTED

1. EVIDENCE SUBMITTED UNDER PREVIOUS APPROVAL #96-1119.01

A. DRAWINGS

Drawing Title	Master-Bilt Sample Configuration
Drawing Number	AP-9766, sheets 1 through 6 of 6
Drawing Signature	William M. Farned, P.E.
Drawing Date	04/23/97 (sheets 1, 5, & 6) and 08/11/97 (sheets 2, 3, & 4) and all signed and sealed on 10/10/97.

B. TESTS

Laboratory:	Construction Research Laboratory, Inc.
Number:	6320 (For Walk-In Refrigeration Unit's wall, wall with door, and Roof panels)
Type:	1- 24 hour live load, per PA 202-94 2- Uniform static air pressure loading, per PA 202-94 3- Large missile impacts, per PA 201-94 4- Cyclic loading, per PA 203-94
Signature:	Vipin N. Tolat, P.E.
Date:	07/03/96 through 08/23/96

Laboratory:	Construction Testing Corporation
Number:	97-058
Type:	1- Axial load per ASTM E-72 for Walk-In Refrigeration Unit wall panel 2- Racking load per ASTM E-72 for Walk-In Refrigeration Unit roof panels
Signature:	Christopher G. Tyson, P.E.
Date:	11/17/97 and 11/24/97

Laboratory:	Construction Testing Laboratories
Number:	CTL-855C
Type:	Tensile Test
Signature:	Ramesh Patel, P.E.
Date:	12/01/97

Laboratory:	Construction Testing Laboratories
Number:	CTL # 720B
Type:	Tensile Test
Signature:	Ramesh Patel, P.E.
Date:	09/03/96

Helmy A. Makar, P.E., M.S.
BNC, Product Control Unit Supervisor
NOA No. 10-1020.02
Expiration Date: 02/05/2012
Approval Date: 02/10/2011

NOTICE OF ACCEPTANCE: EVIDENCE SUBMITTED

C. CALCULATIONS

Calculation Title:	Walk-In Refrigeration Unit
Calculation Signature	William M. Farned, P.E.
Calculation Dates:	10/28/96, 04/28/97, 08/20/97 and 10/07/97

D. MATERIAL CERTIFICATIONS

- Mill Certificate for specifications on mechanical properties for 14 gauge and 20 gauge galvanized steel sheets from New Process Steel Corporation by Sherry Benson dated 09/26/97.
- Mill Certificate for the mechanical properties of Aluminum Alloys 3105/3003 from Reynolds Aluminum Supply Company by S. Douglas Hipp dated 09/22/97.

2. EVIDENCE SUBMITTED UNDER PREVIOUS APPROVAL # 00-1114.12

A. DRAWINGS

1. *Drawing No. AP-9766, prepared by Master-Bilt Products, dated April 23, 1997, sheets 1, 5, & 6 of 6, and dated August 11, 1997, sheets 2, 3, & 4 of 6, all sheets signed and sealed by William M. Farned, P.E. on January 12, 2001.*

B. TESTS

1. *None.*

C. CALCULATIONS

1. *None.*

D. MATERIAL CERTIFICATIONS

1. *None.*

E. OTHERS

1. *This Product Control Approval is a renewal of the Product Control Approval No. 96-1119.01. Manufacturer was asked to submit new drawings and show the steel sheets thickness in decimals rather than gauges. See Note #9 on sheet 1 of 6 of the approved drawings.*

3. EVIDENCE SUBMITTED UNDER PREVIOUS APPROVAL #05-1222.05

A. DRAWINGS

1. *Drawing No. AP-9766, titled " Sample Configuration ", sheets 1 through 7 of 7, prepared by Master-Bilt, dated November 15, 2005, last revision dated August 24, 2006, signed and sealed by Vipin N. Tolat, P.E. on August 28, 2006.*

Helmy A. Makar, P.E., M.S.
BNC, Product Control Unit Supervisor
NOA No. 10-1020.02
Expiration Date: 02/05/2012
Approval Date: 02/10/2011

NOTICE OF ACCEPTANCE: EVIDENCE SUBMITTED

B. TESTS

1. None.

C. CALCULATIONS

1. Design Calculations and structural analysis, prepared by Vipin N. Tolat, P.E., Consulting Engineer, 17 pages, dated October 15, 2005, signed and sealed by Vipin N. Tolat, P.E.

D. QUALITY ASSURANCE

1. By Miami-Dade County Building Code Compliance Office.

E. MATERIAL CERTIFICATIONS

1. None.

4. NEW EVIDENCE SUBMITTED

A. DRAWINGS

1. Drawing No. AP-9766, titled " Sample Configuration ", sheets 1 through 7 of 7, prepared by Master-Bilt, dated November 15, 2005, last revision dated August 24, 2006, signed and sealed by Vipin N. Tolat, P.E. on October 18, 2010.

B. TESTS

1. None.

C. CALCULATIONS

1. None.

D. QUALITY ASSURANCE

1. By Miami-Dade County Building and Neighborhood Compliance Department (BNC).

E. MATERIAL CERTIFICATIONS

1. None.

Helmy A. Makar, P.E., M.S.
BNC, Product Control Unit Supervisor
NOA No. 10-1020.02
Expiration Date: 02/05/2012
Approval Date: 02/10/2011

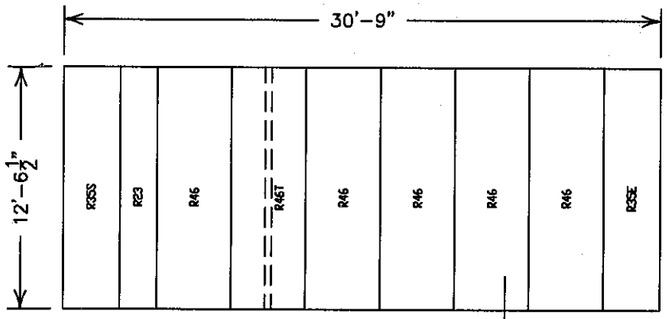

ROOF PANEL PLAN

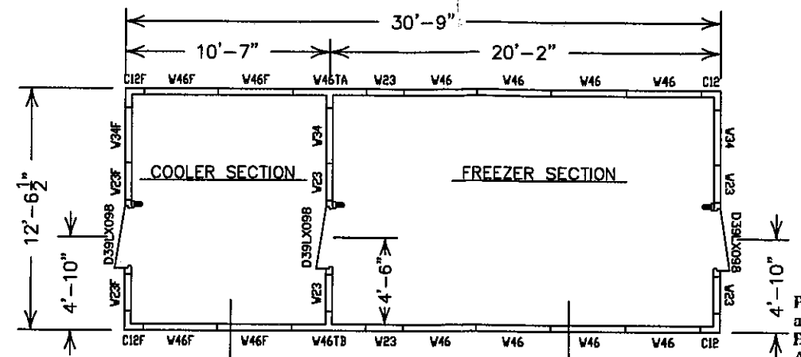

WALL PANEL PLAN

PRODUCT RENEWED
as complying with the Florida
Building Code
Acceptance No 10-1020.02
Expiration Date 02/05/2012
By
Miami Dade Product Control

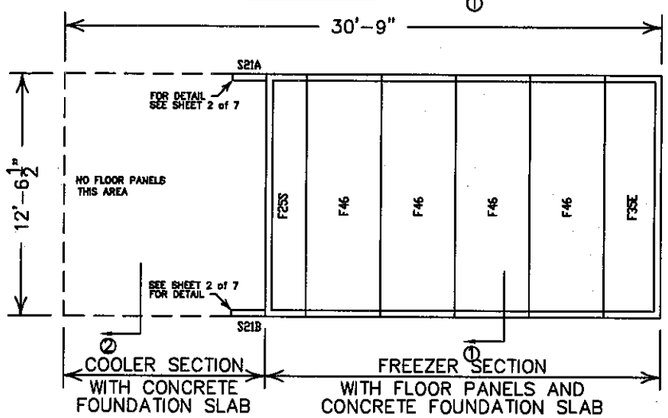

FLOOR PANEL PLAN
SCALE 1/8" = 1'-0"

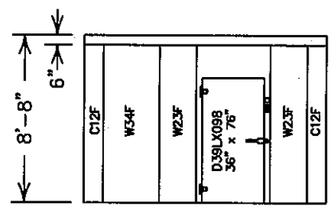

WEST WALL ELEVATION

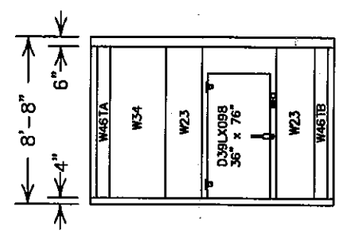

PARTITION WALL ELEVATION

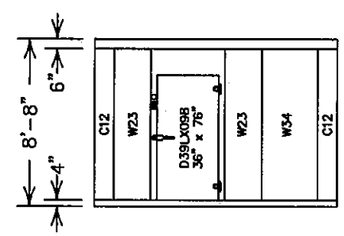

EAST WALL ELEVATION

NOTES:

1. 1.5 SAFETY FACTOR FOR UPLIFT, OVERTURN AND SLIDING IS INCLUDED IN THE LOADS LISTED.
2. DEAD LOADS OF WALLS AND ROOFS HAVE BEEN DEDUCTED FROM UPLIFT LOADING.
3. EACH EXTERIOR INSTALLATION SHALL HAVE A FOUNDATION DESIGN BY A FLORIDA PROFESSIONAL ENGINEER FOR THE FOUNDATION LOADS SHOWN IN THE FOUNDATION LOAD TABLE.
4. M OVERTURN IS DEVELOPED BY HORIZONTAL FORCE H AND VERTICAL FORCE W.
5. THESE UNITS ARE DESIGNED IN ACCORDANCE WITH THE CURRENT EDITION OF FLORIDA BUILDING CODE.
6. DESIGN IS BASED ON ON THE FOLLOWING TEST REPORTS, CTL #720B AND CRL #6320.
7. WIND FORCES ARE IN ACCORDANCE WITH ASCE 7 WITH A BASIC WIND VELOCITY OF 146 MPH AND 1.0 IMPORTANCE FACTOR.
8. WALL AND ROOF COMPOSITE SANDWICH PANELS ARE COMPRISED OF ALUMINUM OR GALVANIZED STEEL FACINGS WITH POURED URETHANE PLASTIC CORES. THICKNESS AND MATERIAL OF FACINGS SHALL BE AS SHOWN ON DRAWINGS.
9. ALUMINUM FACINGS: (ALUM SHEET, 3105 or 3003, ASTM B209, .032" X 48" COIL

ALLOY	YIELD(KSI) MIN
(CASING FLAT) MILL FINISH 3105-H25	22
(LINER) STUCCO EMBOSSED 3003-H18	25

GALVANIZED FACINGS: (STEEL SHEET, ZINC COATED, CQ, ASTM A653, COATING G90, CHEM TREAT, NO OIL, MIN SPAN, 14 or 20 GA. 48" COIL)

	YIELD(KSI) MIN
14 GA. (0.076") BASE METAL	46.0
20 GA. (0.038") BASE METAL	42.0

GALVANIZED FRAMING MEMBERS: (SHALL BE STEEL ANGLES, ZINC COATED, ASTM A653, COATING G90, WITH THE FOLLOWING THICKNESS AS SHOWN ON DWG.

	YIELD(KSI) MIN
14 GA. (0.076") BASE METAL	42.0
16 GA. (0.060") BASE METAL	42.0

10. MINIMUM DENSITY OF URETHANE PANEL CORE SHALL BE 2.2 PCF. THE ONLY FOAM TYPES TO BE USED IN THIS APPROVAL SHALL BE AS STATED IN FM TEST REPORT J.I. 2X1A0.AM DATED 03/30/94, FM TEST REPORT J.I. 0B2A6.AM DATED 08/09/96 OR FM TEST REPORT 3B6A5.AM DATED 03/31/97
11. ROOF PANEL: DEAD LOAD = 5.20 PSF, AND MAXIMUM LIVE LOAD = 30 PSF
    FLOOR PANEL: DEAD LOAD = 1.66 PSF, AND MAXIMUM LIVE LOAD = 250 PSF
    WALL PANEL: DEAD LOAD = 1.66 PSF
12. CONCRETE FOUNDATION TO DEVELOP A MINIMUM COMPRESSIVE STRENGTH OF 3000 PSI AFTER 28 DAYS. CONCRETE MIXURE AND PLACEMENT TO COMPLY WITH THE ACI BUILDING CODE, CURRENT EDITION.
13. REINFORCING STEEL SHALL BE ASTM A-615 GRADE 60. WELDED WIRE FABRIC SHALL COMPLY WITH ASTM A-185.
14. MINIMUM SOIL BEARING CAPACITY SHALL BE 2500 PSF
15. DISSIMILAR METALS IN CONTACT WITH EACH OTHER SHALL BE PROTECTED BY "KOPPERS BITUMINOUS PAINT" ACCORDING TO FLORIDA BUILDING CODE
16. ALL CONCRETE ANCHORS SHALL BE AS SPECIFIED ON THESE DRAWINGS WITH THE EMBEDMENT LENGTHS NOTED SHALL NOT INCLUDE FINISH MATERIAL.

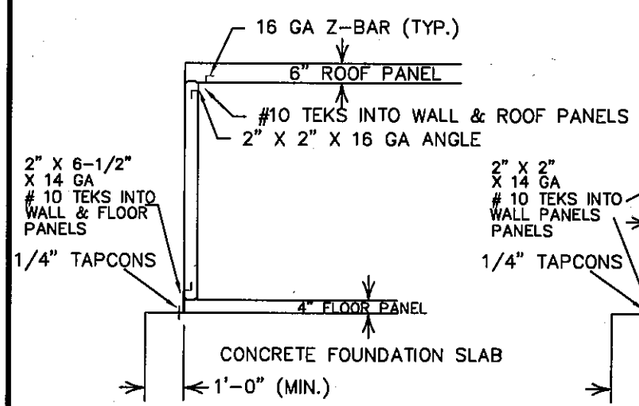

SECTION 1

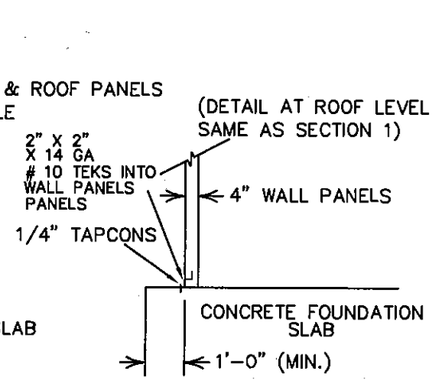

SECTION 2

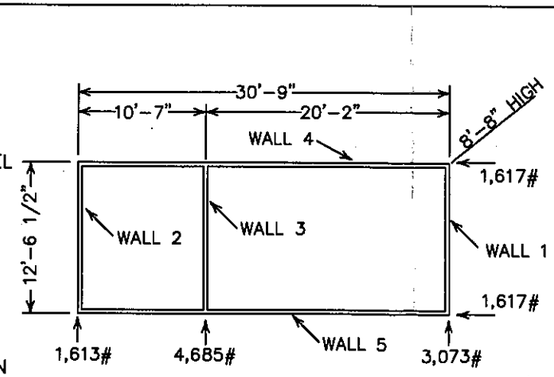

PLAN - HORIZONTAL LOADS
FOUNDATION DESIGN LOADS

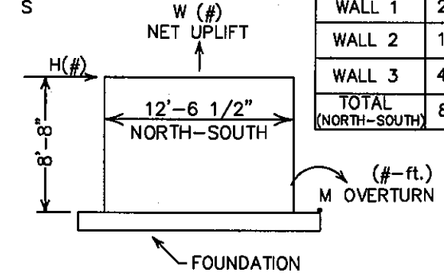

STRUCTURE	H (#)	W NET UPLIFT (#)	M OVERTURN (#-ft.)
WALL 1	2,858	1,614	36,160
WALL 2	1,500	1,614	23,787
WALL 3	4,358	2,166	53,014
TOTAL (NORTH-SOUTH)	8,716	5,394	112,961

N
DIRECTIONAL SYMBOL SHOWN FOR DRAWING ORIENTATION ONLY

VIPIN N. TOLAT, PE (CIVIL)
FL. REG. # 12847
15123 LANTERN CREEK LN.
HOUSTON, TX 77068

10/18/10

C REV	8/24/06	CP	REVISED PER V. TOLAT'S NOTES
B REV	11/11/05	CP	REVISED PER CURRENT FBC AND ASCE 7
A REV	04/23/97	BS	ADDED FOUNDATION DETAILS, NOTES 4 THRU 16 CHG. DOOR NUMBER TO MATCH TESTED DOOR.

THE ONLY FOAM TYPES TO BE USED IN THE MANUFACTURE OF PANELS TO BE AS SHOWN ON THE SUBMITTED FM TEST REPORT J.I. 2X1A0.AM DATED 03/30/94, FM TEST REPORT J.I. 0B2A6.AM DATED 08/09/96, FM TEST REPORT 3B6A5.AM DATED 03/31/97 AND/OR FM TEST REPORT 3022512 DATED 12/10/04 ARE TO BE THE ONLY FOAM TYPES TO BE USED IN THIS APPROVAL.

SPECIFICATIONS	
URETHANE FOAM: 4" WALLS, 6" ROOF	
SIZE W: 12'-6.5" L: 30'-9.0" H: 8'-8.0"	
DOOR OPNG: 36" x 76"	
INT. FIN.	R 20 GA GALV STEEL
	W 0.032 STUCCO ALUMINUM
	F 0.080 TEXTURED ALUMINUM
EXT. FIN.	R 0.032 FLAT ALUMINUM
	W 0.032 FLAT ALUMINUM
	F 0.032 FLAT ALUMINUM
ROOF LOAD = ** PSF (MAX. LL + DL)	

REV.	DATE	ECN NO.	REMARKS

MASTER-BILT Refrigeration Solutions
HWY 15 NORTH
NEW ALBANY, MISSISSIPPI 38652
a Standex company

DRAWN BY BHS/CP	CAD NO. AP-9766		
CHECKED BY	DATE 11/15/05		
APPV. BY	PAGE 1 OF 7	SCALE 3/8" = 1'-0"	

DIMENSIONS ARE IN INCHES UNLESS NOTED	TOLERANCE UNLESS NOTED +/- 0.031
CUSTOMER	BUILDING CODE COMPLIANCE OFFICE
CUST. LOC.	MIAMI, FL
TITLE	SAMPLE CONFIGURATION
DESC.	ROOF, FLOOR, WALL PANELS
	FOUNDATION LOADS
	STRUCTURAL NOTES
MODEL NO.	PROPOSED UNIT
REVISION	REV. B

WALL PANEL FLOORLESS

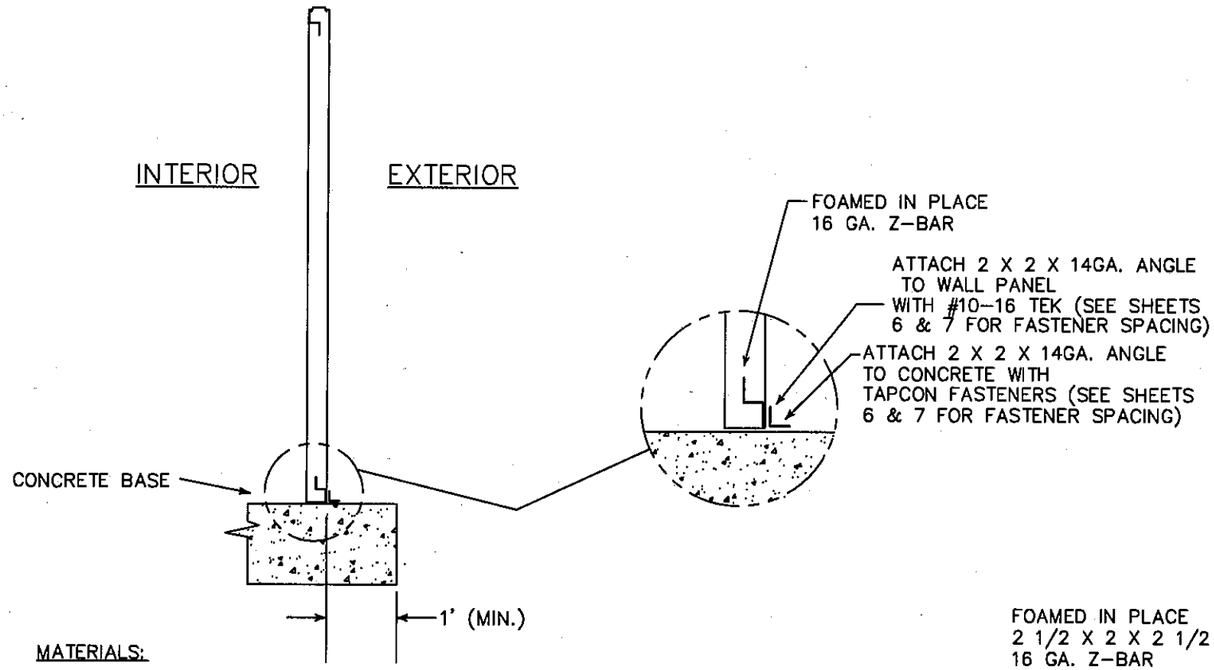

MATERIALS:
2x2x14GA ANGLE x UNIT DIMENSION
2 1/2 x 2 x 2 1/2 Z-BAR x PANEL DIMENSION

FASTENERS:
(SEE FASTENER DETAILS SHEET #6 AND #7)
#10-16 TEK SMS.
1/4" x 1 3/4" HEX WASHER-HEAD TAPCON FASTENERS.
M/B CAM-LOCK. SPACING AS DIMENSIONED

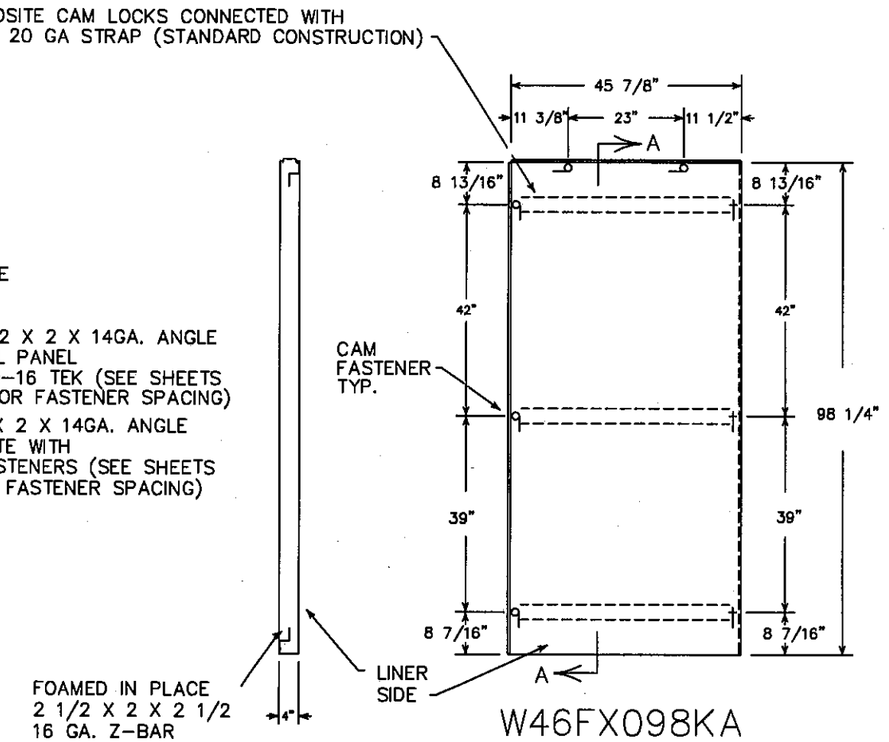

W46FX098KA
WALL PANEL ELEVATION

LINER: .032" STUCCO ALUM
CASING: .032" FLAT ALUM

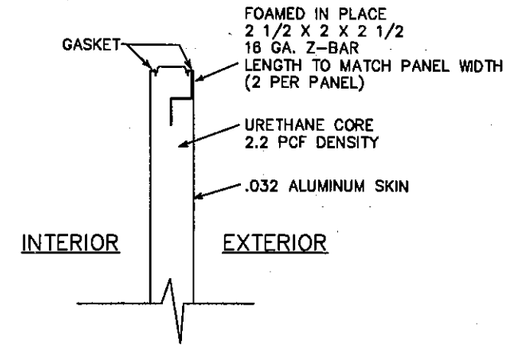

SECTION "A"
SCALE: 1" = 1'-0"

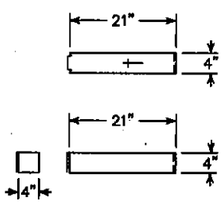

S21A--004KA
LINER: .032" STUCCO ALUM
CASING: .032" FLAT ALUM
S21A PANEL ELEVATION

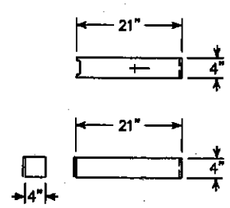

S21B--004KA
LINER: .032" STUCCO ALUM
CASING: .032" FLAT ALUM
S21B PANEL ELEVATION

NOTE: THESE PANELS FOR TRANSITION FROM FLOOR PANEL TO CONCRETE FLOOR SLAB

PRODUCT RENEWED
as complying with the Florida
Building Code
Acceptance No 10-1020.02
Expiration Date 02/05/2012
By Helena A. Alder
Miami Dade Product Control

VIPIN N. TOLAT, PE (CIVIL)
FL. REG. # 12847
15123 LANTERN CREEK LN.
HOUSTON, TX 77068

10/18/10

D REV D	8/24/06	CP	REVISED PER V. TOLAT'S NOTES
C REV C	11/15/05	CP	REVISED PER CURRENT FBC
B REV B	08/11/97	BS	ADD FOR FASTENER SPACING SEE SHT 6 OF 6
A REV A	04/23/97	BS	ADD INSIDE ANGLE AT WALL AND FLOOR ADD S21A AND S21B DETAILS

THE ONLY FOAM TYPES TO BE USED IN THE MANUFACTURE OF PANELS TO BE AS SHOWN ON THE SUBMITTED FM TEST REPORT J.I. 2X1A0.AM DATED 03/30/94, FM TEST REPORT J.I. OB2A6.AM DATED 08/09/96, FM TEST REPORT 3B6A5.AM DATED 03/31/97 AND/OR FM TEST REPORT 3022512 DATED 12/10/04 ARE TO BE THE ONLY FOAM TYPES TO BE USED IN THIS APPROVAL.

SPECIFICATIONS	
URETHANE FOAM: 4" WALLS, 6" ROOF	
SIZE W: 12'-6.5" L: 30'-9.0" H: 8'-8.0"	
DOOR OPNG: 36" x 76"	
INT. FIN.	R 20 GA GALV STEEL
	W 0.032 STUCCO ALUMINUM
	F 0.080 TEXTURED ALUMINUM
EXT. FIN.	R 0.032 FLAT ALUMINUM
	W 0.032 FLAT ALUMINUM
	F 0.032 FLAT ALUMINUM
ROOF LOAD = ** PSF (MAX. LL + DL)	

REV.	DATE	ECN NO.	REMARKS

MASTER-BILT Refrigeration Solutions
HWY 15 NORTH
NEW ALBANY, MISSISSIPPI 38652
a Standex company

DRAWN BY BHS/CP	CAD NO. AP-9766		
CHECKED BY	DATE 11/15/05		
APPV. BY	PAGE 2 OF 7	SCALE 3/8" = 1'-0"	

DIMENSIONS ARE IN INCHES UNLESS NOTED	TOLERANCE UNLESS NOTED +/- 0.031
CUSTOMER	BUILDING CODE COMPLIANCE OFFICE
CUST. LOC.	MIAMI, FL
TITLE	SAMPLE CONFIGURATION
DESC.	WALL PANEL / FLOORLESS
MODEL NO.	PROPOSED UNIT
REVISION	C

WALL PANEL WITH FLOOR

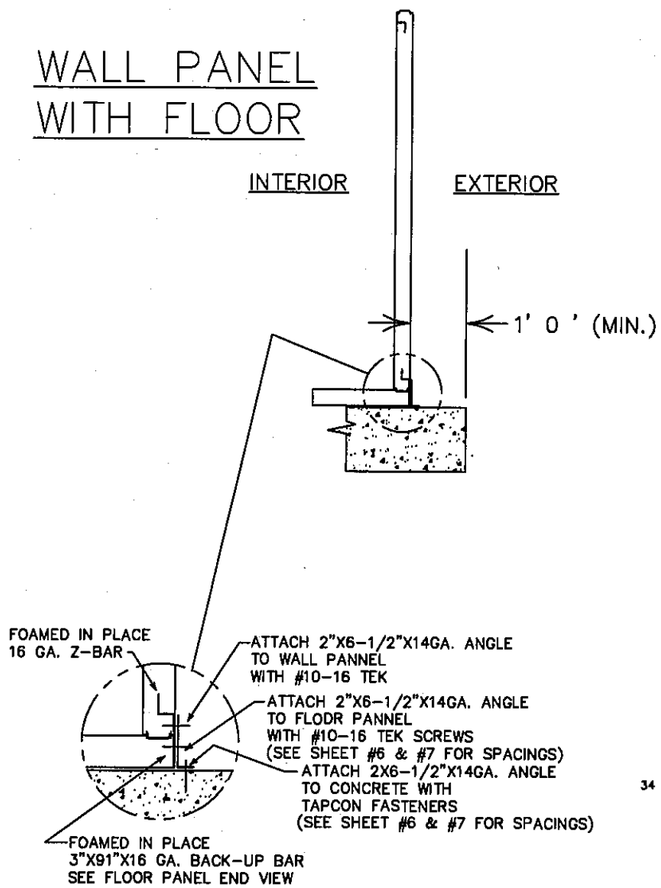

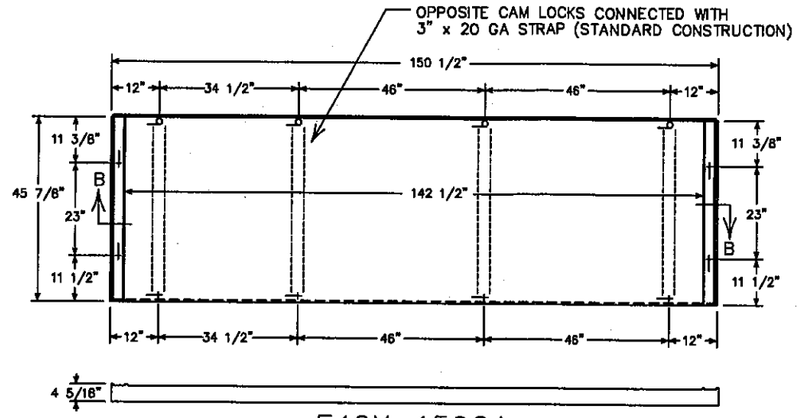

F46X-150GA
LINER: 14 GA. GALV.
CASING: .032 FLAT ALUM

TYPICAL FLOOR PANEL

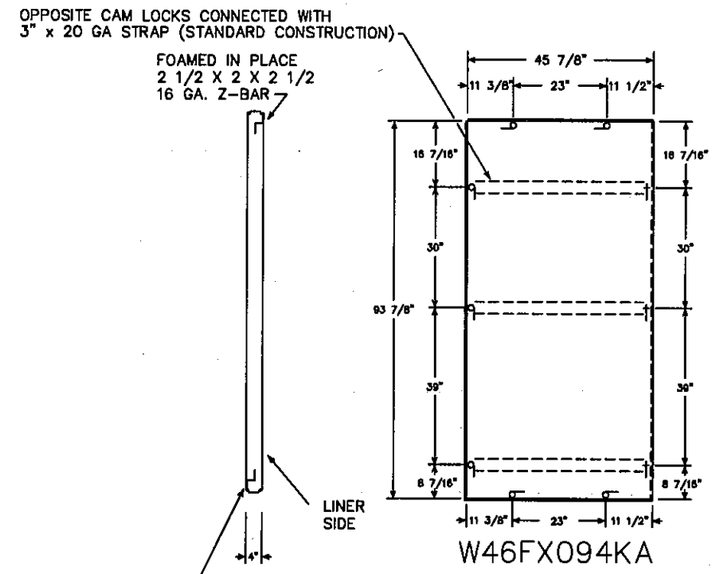

W46FX094KA
LINER: .032" STUCCO ALUM
CASING: .032" FLAT ALUM

WALL PANEL ELEVATION

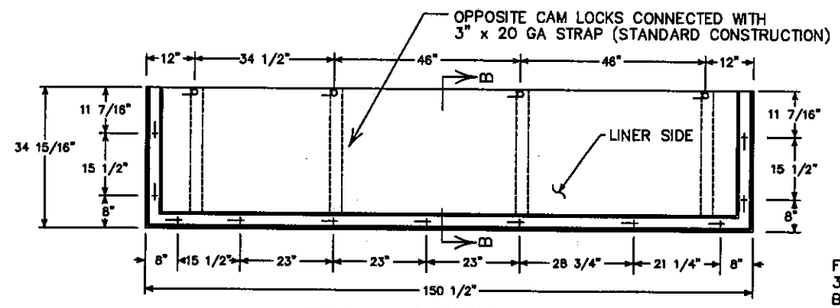

F35--150GA
LINER: 0.080 TEXTURED ALUMINUM
CASING: .032 FLAT ALUM

TYPICAL FLOOR END PANEL

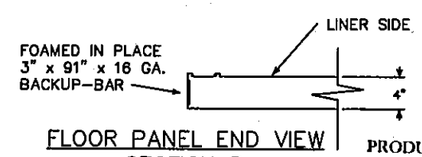

FLOOR PANEL END VIEW
SECTION B

MATERIALS:
PCS 2 1/2 x 2 x 2 1/2 Z-BAR x PANEL DIMENSION
3" x 91" x 16 GA BACK-UP BAR x PANEL DIMENSIDN
2 x 6 1/2" x 14 GA ANGLE x UNIT DIMENSION

FASTENERS:
(SEE FASTENER DETAILS SHEET #6 AND #7)
#10-16 TEK SCREWS
1/4" x 1 3/4" HEX WASHER-HEAD TAPCON FASTENERS.
M/B CAM-LOCK. SPACING AS DIMENSIONED

PRODUCT RENEWED
as complying with the Florida Building Code
Acceptance No 10-1020.02
Expiration Date 02/05/2012
By Helena A. Martin
Miami Dade Product Control

VIPIN N. TOLAT, PE (CIVIL)
FL. REG. # 12847
15123 LANTERN CREEK LN.
HOUSTON, TX 77068

10/18/10

D REV D	8/24/06	CP	REVISED PER V. TOLAT'S NOTES
C REV C	11/15/05	CP	REVISED PER CURRENT FBC
B REV B	08/11/97	BS	ALSO SHOW CAMLOCK CONNECTION ALL VIEWS
A REV A	04/23/97	BS	CHANGE TYP FLOOR STARTER TO SHOW LATCHES

THE ONLY FOAM TYPES TO BE USED IN THE MANUFACTURE OF PANELS TO BE AS SHOWN ON THE SUBMITTED FM TEST REPORT J.I. 2X1A0.AM DATED 03/30/94, FM TEST REPORT J.I. OB2A6.AM DATED 08/09/96, FM TEST REPORT 3B6A5.AM DATED 03/31/97 AND/OR FM TEST REPORT 3022512 DATED 12/10/04 ARE TO BE THE ONLY FOAM TYPES TO BE USED IN THIS APPROVAL.

SPECIFICATIONS	
URETHANE FOAM: 4" WALLS, 6" ROOF	
SIZE W:12'-6.5" L: 30'-9.0" H: 8'-8.0"	
DOOR OPNG: 36" x 76"	
INT. FIN.	R 20 GA GALV STEEL
	W 0.032 STUCCO ALUMINUM
	F 0.080 TEXTURED ALUMINUM
EXT. FIN.	R 0.032 FLAT ALUMINUM
	W 0.032 FLAT ALUMINUM
	F 0.032 FLAT ALUMINUM
ROOF LOAD = ** PSF (MAX. LL + DL)	

REV.	DATE	ECN NO.	REMARKS

MASTER-BILT Refrigeration Solutions
HWY 15 NORTH
NEW ALBANY, MISSISSIPPI 38652
a Standex company

DIMENSIONS ARE IN INCHES UNLESS NOTED	TOLERANCE UNLESS NOTED +/- 0.031		
CUSTOMER	BUILDING CODE COMPLIANCE OFFICE		
CUST. LOC.	MIAMI, FL		
TITLE	SAMPLE CONFIGURATION		
DESC.	WALL PANEL / WITH FLOOR		
DRAWN BY BHS/CP	CAD NO. AP-9766		
CHECKED BY	DATE 11/15/05		
APPV. BY	PAGE 3 OF 7	SCALE 3/8" = 1'-0"	
MODEL NO. PROPOSED UNIT			REVISION C

ROOF PANEL

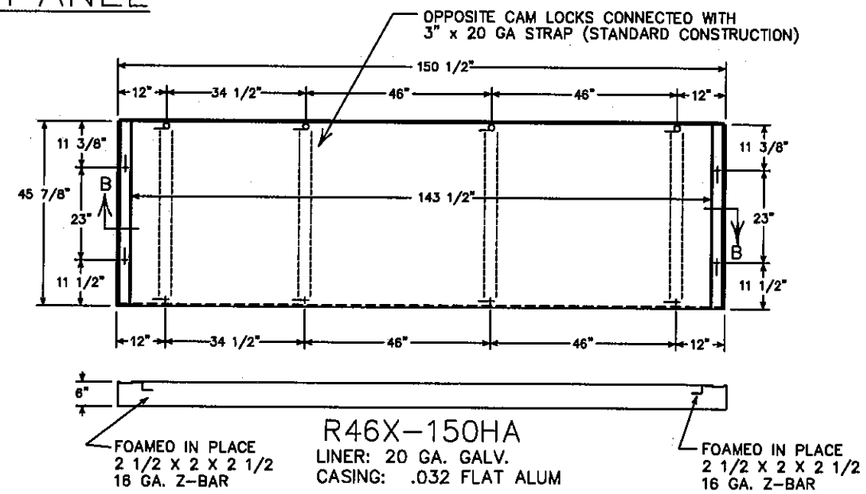

R46X-150HA
LINER: 20 GA. GALV.
CASING: .032 FLAT ALUM

TYPICAL ROOF PANEL

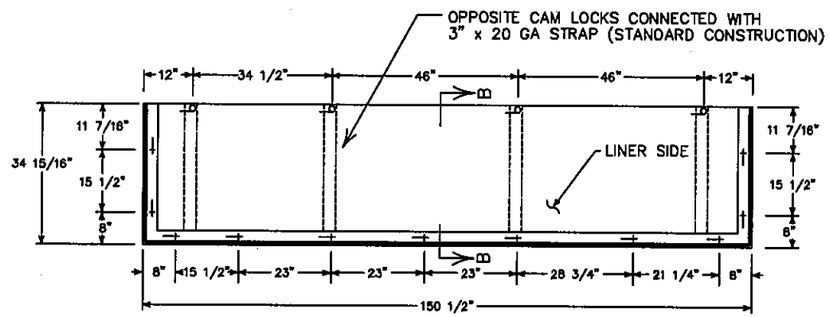

R35--150HA
LINER: 20 GA. GALV.
CASING: .032 FLAT ALUM

TYPICAL ROOF END PANEL

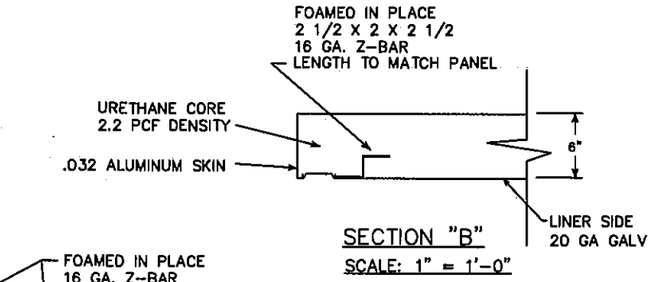

SECTION "B"
SCALE: 1" = 1'-0"

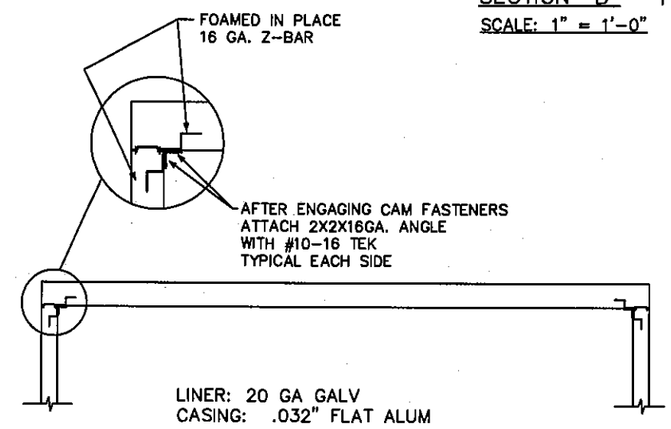

LINER: 20 GA GALV
CASING: .032" FLAT ALUM

ROOF PANEL ELEVATION

MATERIALS:
2x2x16GA ANGLE x UNIT DIMENSION
2 1/2 x 2 x 2 1/2 Z-BAR x PANEL DIMENSION

FASTENERS:
(SEE FASTENER DETAILS SHEET #6 of 7)
#10-16 TEK SMS.
1/4" x 1 3/4" HEX WASHER-HEAD TAPCON FASTENERS.
M/B CAM-LOCK. SPACING AS DIMENSIONED

PRODUCT RENEWED
as complying with the Florida
Building Code
Acceptance No 10-1020.02
Expiration Date 02/05/2012
By
Miami Dade Product Control

VIPIN N. TOLAT, PE (CIVIL)
FL. REG. # 12847
15123 LANTERN CREEK LN.
HOUSTON, TX 77068

10/18/10

D REV D	8/24/06	CP	REVISED PER V. TOLAT'S NOTES
C REV C	11/15/05	CP	REVISED PER CURRENT FBC
B REV B	08/11/97	BS	ALSO SHOW CAMLOCK CONNECTION ALL VIEWS
A REV A	04/23/97	BS	CHANGE TYP ROOF STARTER TO SHOW LATCHES

THE ONLY FOAM TYPES TO BE USED IN THE MANUFACTURE OF PANELS TO BE AS SHOWN ON THE SUBMITTED FM TEST REPORT J.I. 2X1A0.AM DATED 03/30/94, FM TEST REPORT J.I. 0B2A6.AM DATED 08/09/96, FM TEST REPORT 3B6A5.AM DATED 03/31/97 AND/OR FM TEST REPORT 3022512 DATED 12/10/04 ARE TO BE THE ONLY FOAM TYPES TO BE USED IN THIS APPROVAL.

SPECIFICATIONS	
URETHANE FOAM: 4" WALLS, 6" ROOF	
SIZE W: 12'-6.5" L: 30'-9.0" H: 8'-8.0"	
DOOR OPNG: 36" x 76"	
INT. FIN.	R 20 GA GALV STEEL
	W 0.032 STUCCO ALUMINUM
	F 0.080 TEXTURED ALUMINUM
EXT. FIN.	R 0.032 FLAT ALUMINUM
	W 0.032 FLAT ALUMINUM
	F 0.032 FLAT ALUMINUM
ROOF LOAD = ** PSF (MAX. LL + DL)	

REV.	DATE	ECN NO.	REMARKS

MASTER-BILT Refrigeration Solutions
HWY 15 NORTH
NEW ALBANY, MISSISSIPPI 38652
a Standex company

DRAWN BY BHS/CP	CAD NO. AP-9766		
CHECKED BY	DATE 11/15/05		
APPV. BY	PAGE 4 OF 7	SCALE 3/8" = 1'-0"	

DIMENSIONS ARE IN INCHES UNLESS NOTED
TOLERANCE UNLESS NOTED +/- 0.031
CUSTOMER: BUILDING CODE COMPLIANCE OFFICE
CUST. LOC.: MIAMI, FL
TITLE: SAMPLE CONFIGURATION
DESC.: ROOF PANEL
MODEL NO.: PROPOSED UNIT
REVISION: C

DOOR PANEL

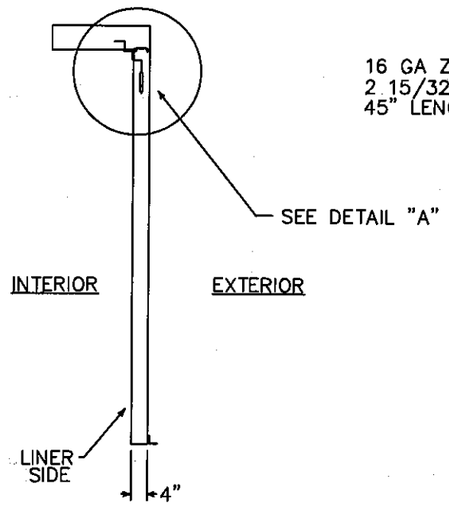

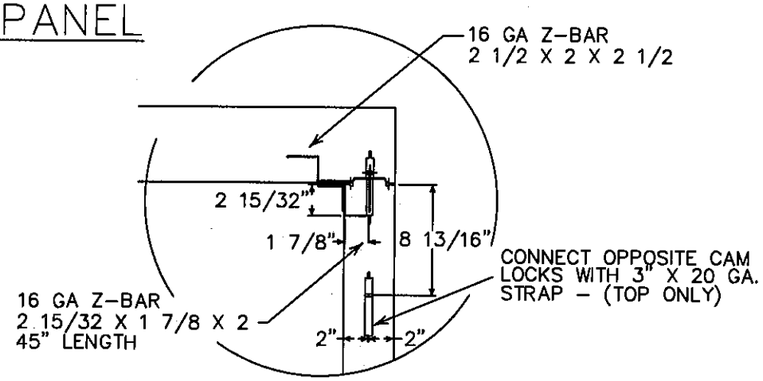

DETAIL "A"

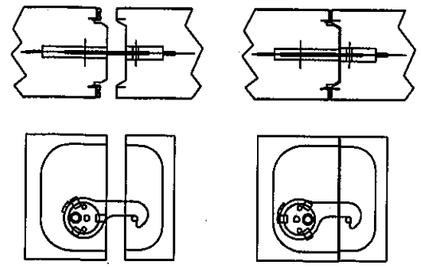

DETAIL "B"
PANEL TO PANEL CONNECTION SHOWING M/B CAM LOCK (NTS)

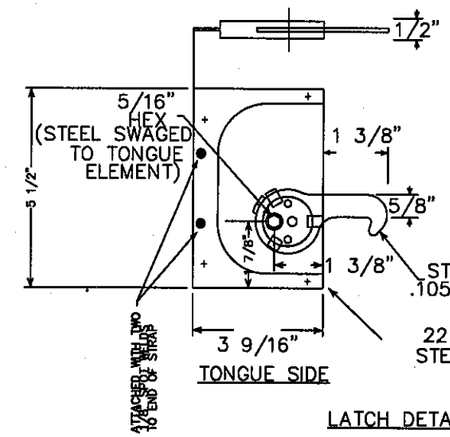

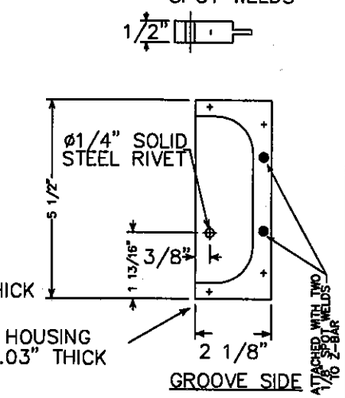

LATCH DETAILS

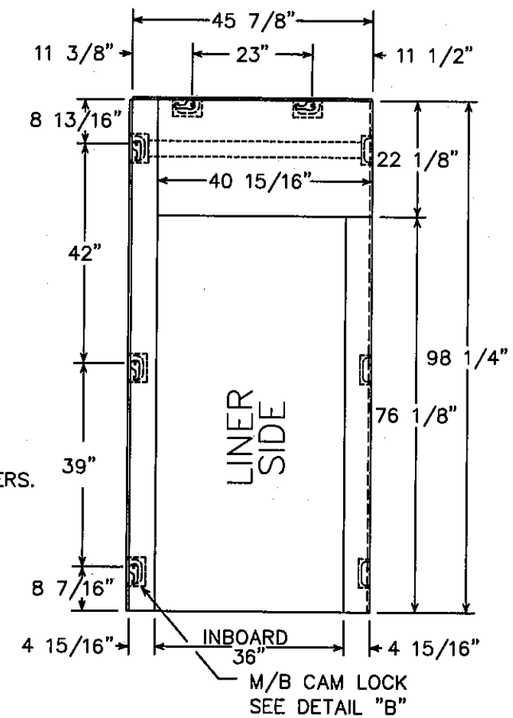

DOOR PANEL ELEVATION

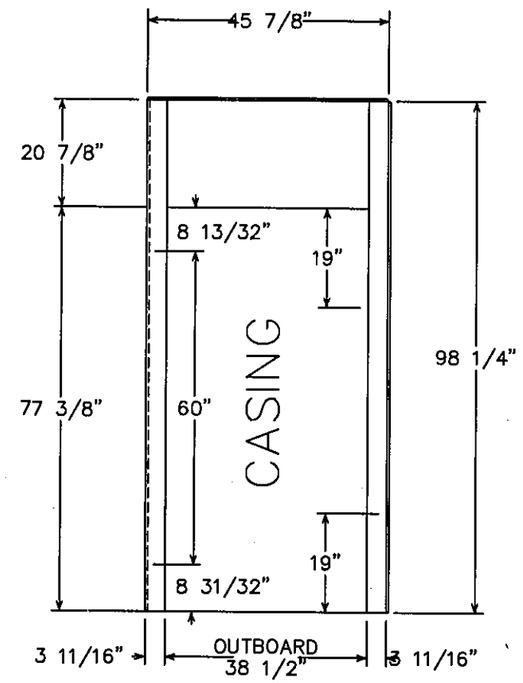

LINER: .032" STUCCO ALUM
CASING: .032" FLAT ALUM

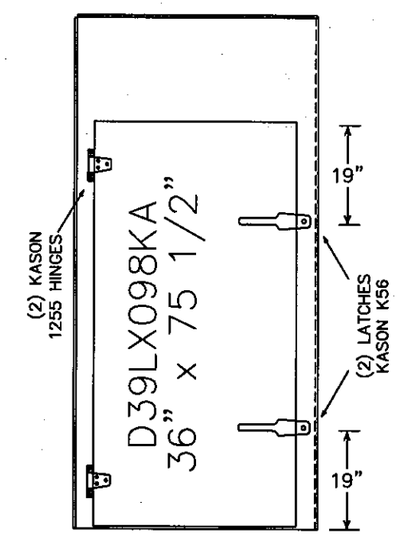

DOOR ASSEMBLY

MATERIALS:
2 x 2 x 16GA ANGLE x UNIT DIMENSION
2 1/2 x 2 x 2 1/2 Z-BAR x PANEL DIMENSION

FASTENERS:
(SEE FASTENER DETAILS SHEET #6 of 7
#10-16 TEK SMS.
1/4" x 1 3/4" HEX WASHER-HEAD TAPCON FASTENERS.
M/B CAM-LOCK. SPACING AS DIMENSIONED

PRODUCT RENEWED
as complying with the Florida Building Code
Acceptance No 10-1020.02
Expiration Date 02/05/2012
By [signature]
Miami Dade Product Control

VIPIN N. TOLAT, PE (CIVIL)
FL. REG. # 12847
15123 LANTERN CREEK LN.
HOUSTON, TX 77068

[signature] 10/18/10

© REV C	8/25/06	CP	REVISED PER V. TOLAT'S NOTES
Ⓑ REV B	11/15/05	CP	REVISED PER CURRENT FBC
Ⓐ REV A	04/23/97	BS	ADD DOOR CASING AND LATCH DETAILS

THE ONLY FOAM TYPES TO BE USED IN THE MANUFACTURE OF PANELS TO BE AS SHOWN ON THE SUBMITTED FM TEST REPORT J.I. 2X1A0.AM DATED 03/30/94, FM TEST REPORT J.I. OB2A6.AM DATED 08/09/96, FM TEST REPORT 3B6A5.AM DATED 03/31/97 AND/OR FM TEST REPORT 3022512 DATED 12/10/04 ARE TO BE THE ONLY FOAM TYPES TO BE USED IN THIS APPROVAL.

PROPRIETARY INFORMATION
South Florida Building Code Officials are authorized to distribute copies of this design at their discretion.

PROPRIETARY INFORMATION
This drawing is the property of Master-Bilt Products. It contains proprietary information and is disclosed in conjunction with the understanding it will not be reproduced or copied directly or indirectly and is not to be used in whole or in part to assist in making or to furnish any information for the making or drawings or prints of apparatus embodying features, data or information derived in any manner from this drawing without the express written consent of Master-Bilt Products.

SPECIFICATIONS	
URETHANE FOAM: 4" WALLS, 6" ROOF	
SIZE W:12'-6.5" L: 30'-9.0" H: 8'-8.0"	
DOOR OPNG: 36" x 76"	
INT. FIN.	R 20 GA GALV STEEL
	W 0.032 STUCCO ALUMINUM
	F 0.080 TEXTURED ALUMINUM
EXT. FIN.	R 0.032 FLAT ALUMINUM
	W 0.032 FLAT ALUMINUM
	F 0.032 FLAT ALUMINUM
ROOF LOAD = ** PSF (MAX. LL + DL)	

REV.	DATE	ECN NO.	REMARKS

MASTER-BILT Refrigeration Solutions
HWY 15 NORTH
NEW ALBANY, MISSISSIPPI 38652
a Standex company

DRAWN BY BHS/CP	CAD NO. AP-9766		
CHECKED BY	DATE 11/15/05		
APPV. BY	PAGE 5 OF 7	SCALE 3/8" = 1'-0"	

DIMENSIONS ARE IN INCHES UNLESS NOTED	TOLERANCE UNLESS NOTED +/- 0.031
CUSTOMER	BUILDING CODE COMPLIANCE OFFICE
CUST. LOC.	MIAMI, FL
TITLE	SAMPLE CONFIGURATION
DESC.	DOOR PANEL
MODEL NO.	PROPOSED UNIT
REVISION	B

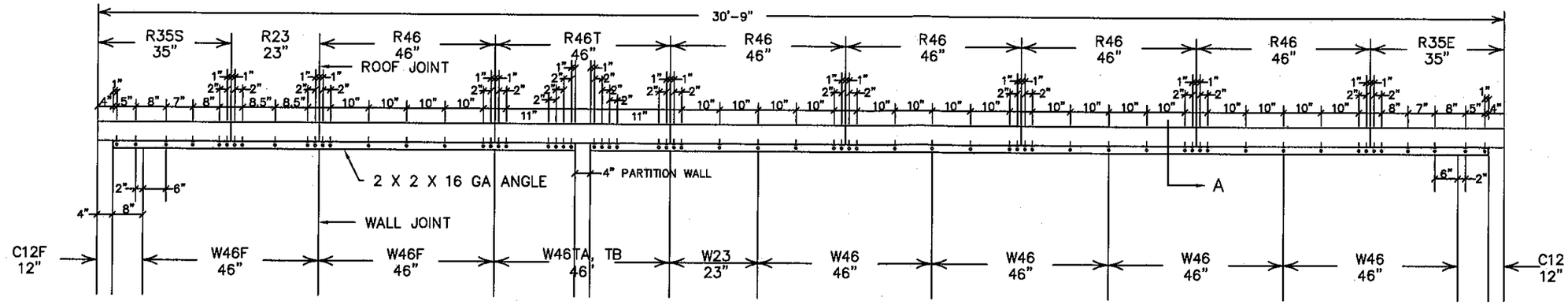

NOTE: ALL DIMENSIONS ARE IN INCHES

ELEVATION @ NORTH AND SOUTH SIDEWALLS AND ROOF PANEL FASTENER LAYOUT (NTS)

ALL FASTENERS, #10 TEKS

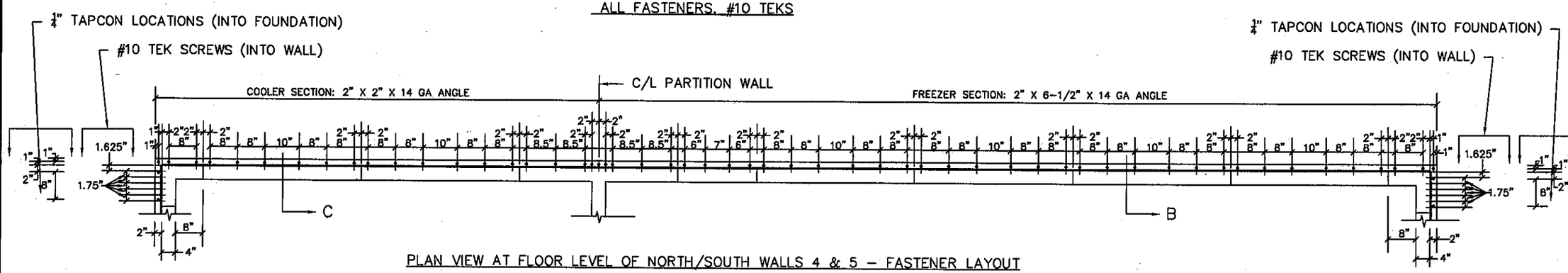

PLAN VIEW AT FLOOR LEVEL OF NORTH/SOUTH WALLS 4 & 5 – FASTENER LAYOUT

PRODUCT RENEWED
as complying with the Florida
Building Code
Acceptance No 10-1020.02
Expiration Date 02/05/2012
By
Miami Dade Product Control

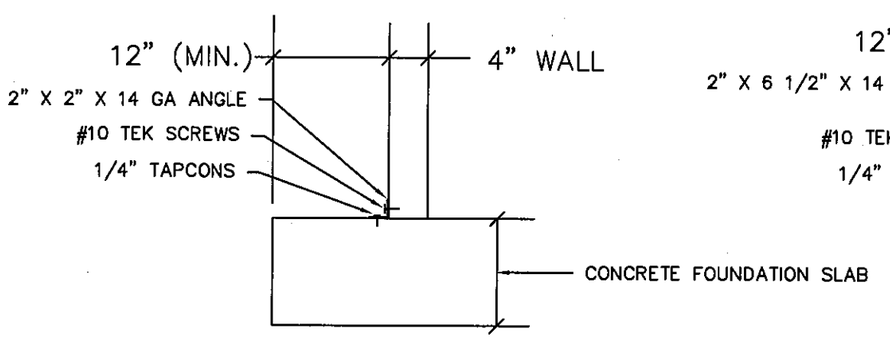

SECTION C

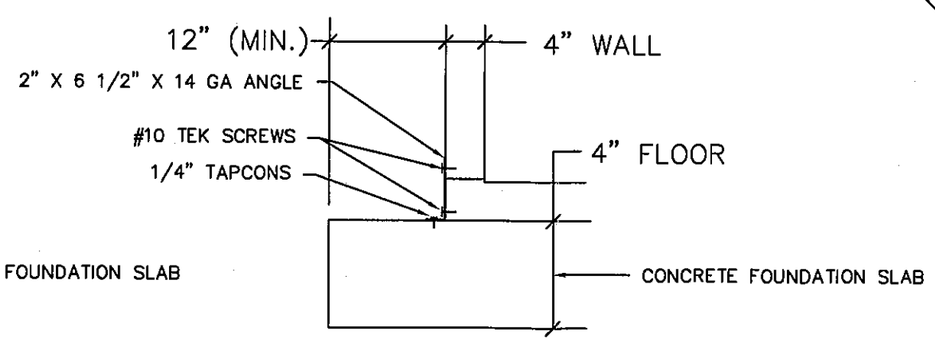

SECTION B

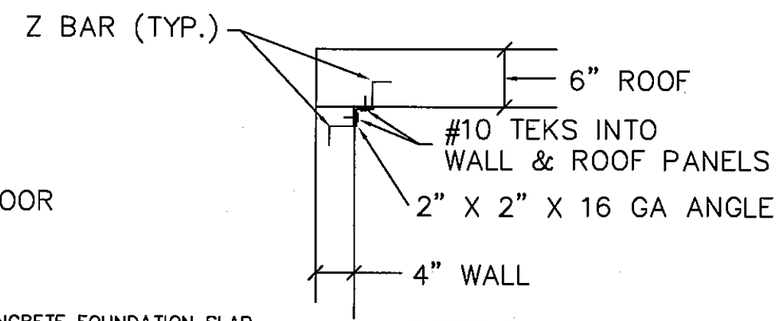

SECTION A

VIPIN N. TOLAT, PE (CIVIL)
FL. REG. # 12847
15123 LANTERN CREEK LN.
HOUSTON, TX 77068

10/18/10

Ⓐ REV A	8/24/06	CP	REVISED PER V. TOLAT'S NOTES

THE ONLY FOAM TYPES TO BE USED IN THE MANUFACTURE OF PANELS TO BE AS SHOWN ON THE SUBMITTED FM TEST REPORT J.I. 2X1A0.AM DATED 03/30/94, FM TEST REPORT J.I. OB2A6.AM DATED 08/09/96, FM TEST REPORT 3B6A5.AM DATED 03/31/97 AND/OR FM TEST REPORT 3022512 DATED 12/10/04 ARE TO BE THE ONLY FOAM TYPES TO BE USED IN THIS APPROVAL.

SPECIFICATIONS	
URETHANE FOAM: 4" WALLS, 6" ROOF	
SIZE W:12'-6.5" L: 30'-9.0" H: 8'-8.0"	
DOOR OPNG: 36" x 76"	
INT. FIN.	R 20 GA GALV STEEL
	W 0.032 STUCCO ALUMINUM
	F 0.080 TEXTURED ALUMINUM
EXT. FIN.	R 0.032 FLAT ALUMINUM
	W 0.032 FLAT ALUMINUM
	F 0.032 FLAT ALUMINUM
ROOF LOAD = ** PSF (MAX. LL + DL)	

REV.	DATE	ECN NO.	REMARKS

MASTER-BILT® Refrigeration Solutions
HWY 15 NORTH
NEW ALBANY, MISSISSIPPI 38652
a Standex company

DIMENSIONS ARE IN INCHES UNLESS NOTED		TOLERANCE UNLESS NOTED	+/- 0.031
CUSTOMER	BUILDING CODE COMPLIANCE OFFICE		
CUST. LOC.	MIAMI, FL		
TITLE	SAMPLE CONFIGURATION		
DESC.	FASTENER DETAILS, NORTH-SOUTH WALLS		
DRAWN BY BHS/CP	CAD NO. AP-9766		
CHECKED BY	DATE 11/15/05		
APPV. BY	PAGE 6 OF 7	SCALE 3/8" = 1'-0"	
MODEL NO. PROPOSED UNIT			REVISION

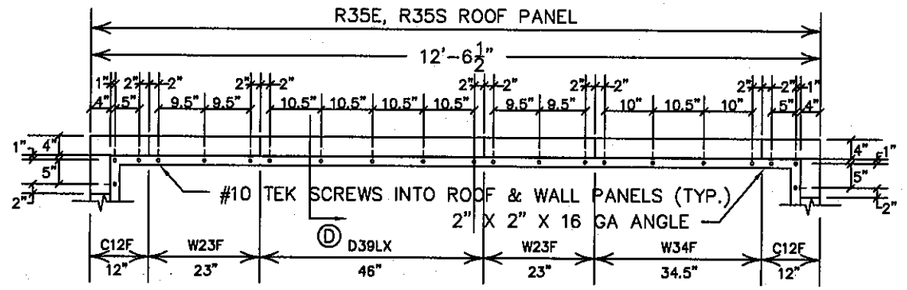

PLAN VIEW @ ROOF LEVEL
EAST & WEST END WALLS #1 & #2
FASTENER LAYOUT (ALL FASTENERS – #10 TEKS)

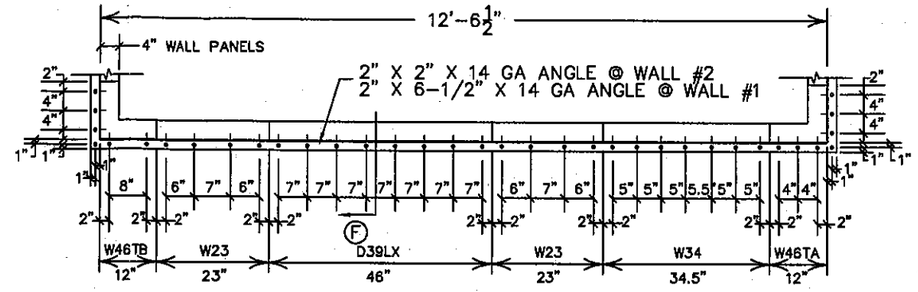

PLAN VIEW @ EAST & WEST WALLS, #1 & #2 AT FLOOR LEVEL
FASTENER LAYOUT (ALL FASTENERS – #10 TEKS)

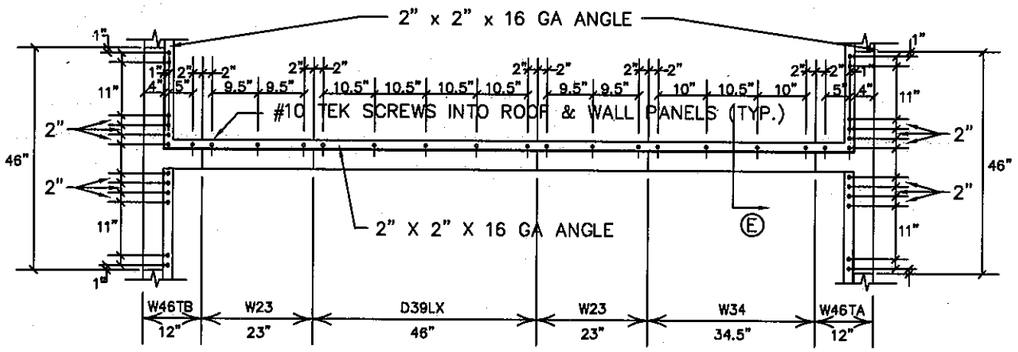

PLAN VIEW @ ROOF LEVEL, WALL #3 (PARTITION WALL)
FASTENER LAYOUT (ALL FASTENERS – #10 TEKS)

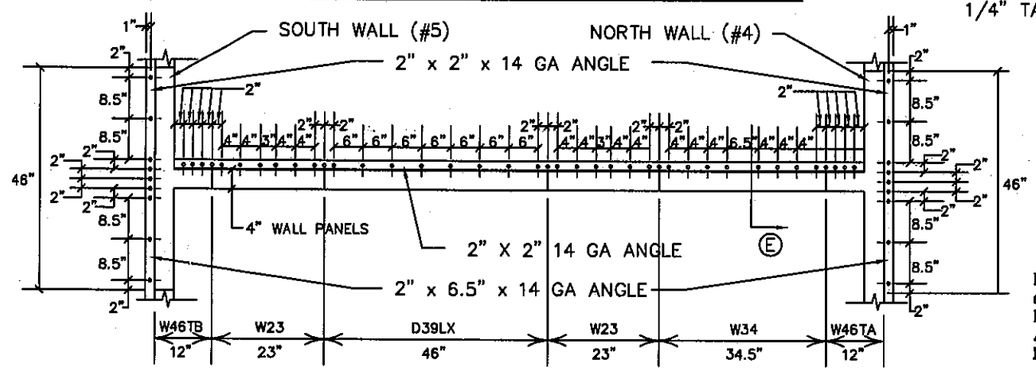

PLAN VIEW PARTITION WALL #3 AT FOOR LEVEL
FASTENER LAYOUT

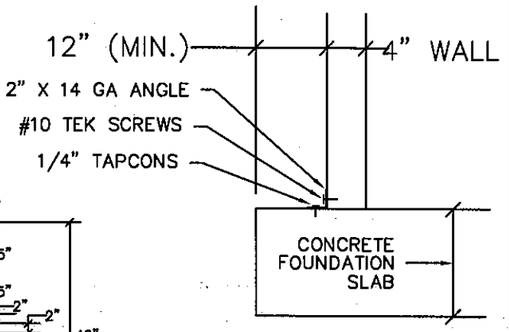

SECTION F
WALL #2

PRODUCT RENEWED
as complying with the Florida
Building Code
Acceptance No 10-1020.02
Expiration Date 02/05/2012
By
Miami Dade Product Control

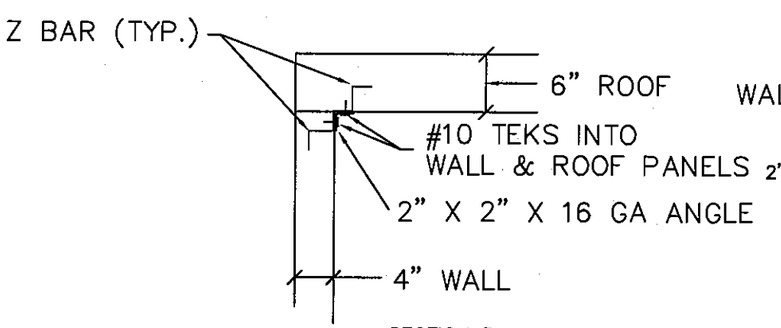

SECTION D

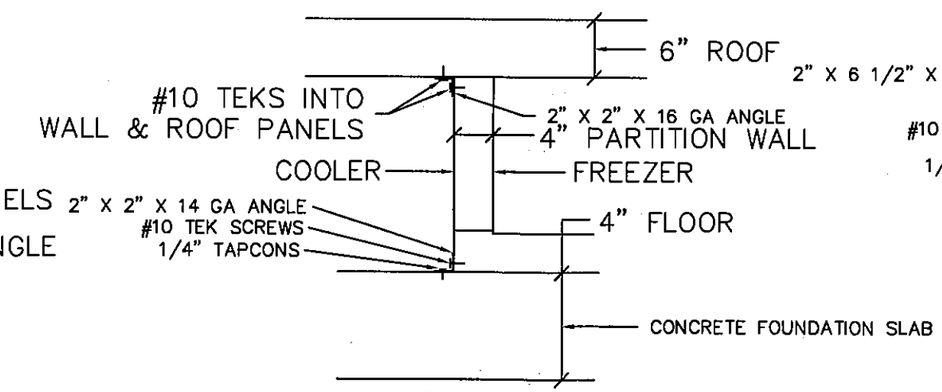

SECTION E

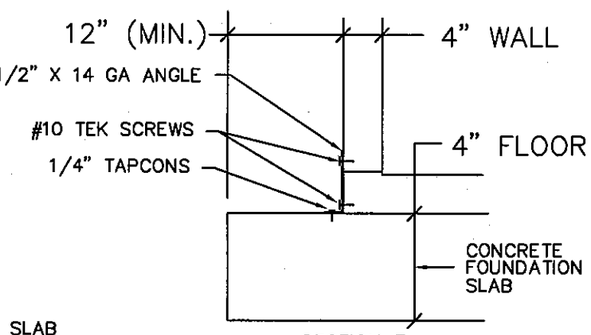

SECTION F
WALL #1

VIPIN N. TOLAT, PE (CIVIL)
FL. REG. # 12847
15123 LANTERN CREEK LN.
HOUSTON, TX 77068

10/18/10

THE ONLY FOAM TYPES TO BE USED IN THE MANUFACTURE OF PANELS TO BE AS SHOWN ON THE SUBMITTED FM TEST REPORT J.I. 2X1A0.AM DATED 03/30/94, FM TEST REPORT J.I. OB2A6.AM DATED 08/09/96, FM TEST REPORT 3B6A5.AM DATED 03/31/97 AND/OR FM TEST REPORT 3022512 OATED 12/10/04 ARE TO BE THE ONLY FOAM TYPES TO BE USED IN THIS APPROVAL.

SPECIFICATIONS	
URETHANE FOAM: 4" WALLS, 6" ROOF	
SIZE W: 12'-6.5" L: 30'-9.0" H: 8'-8.0"	
DOOR OPNG: 36" x 76"	
INT. FIN.	R 20 GA GALV STEEL
	W 0.032 STUCCO ALUMINUM
	F 0.080 TEXTURED ALUMINUM
EXT. FIN.	R 0.032 FLAT ALUMINUM
	W 0.032 FLAT ALUMINUM
	F 0.032 FLAT ALUMINUM
ROOF LOAD = ** PSF (MAX. LL + DL)	

REV.	DATE	ECN NO.	REMARKS
A	8/25/06	CP	REVISED PER V. TOLAT'S NOTES

MASTER-BILT® Refrigeration Solutions
HWY 15 NORTH
NEW ALBANY, MISSISSIPPI 38652
a Standex company

DIMENSIONS ARE IN INCHES UNLESS NOTED		TOLERANCE UNLESS NOTED	+/- 0.031
CUSTOMER	BUILDING CODE COMPLIANCE OFFICE		
CUST. LOC.	MIAMI, FL		
TITLE	SAMPLE CONFIGURATION		
DESC.	FASTENER DETAILS, EAST-WEST WALLS		
DRAWN BY BHS/CP	CAD NO. AP-9766		
CHECKED BY	DATE 11/15/05		
APPV. BY	PAGE 7 OF 7	SCALE 3/8" = 1'-0"	
MODEL NO.	PROPOSED UNIT	REVISION	