MIAMI-DADE COUNTY
BUILDING AND NEIGHBORHOOD COMPLIANCE DEPARTMENT (BNC)
BOARD AND CODE ADMINISTRATION DIVISION

MIAMI-DADE COUNTY
PRODUCT CONTROL SECTION
11805 SW 26 Street, Room 208
Miami, Florida 33175-2474
T (786) 315-2590 F (786) 315-2599
www.miamidade.gov/building/home/asp

NOTICE OF ACCEPTANCE (NOA)

M. Q. Windows
1855 Griffin Road, Suite A-271
Dania, Fl. 33004

SCOPE:

This NOA is being issued under the applicable rules and regulations governing the use of construction materials. The documentation submitted has been reviewed by Miami-Dade County Product Control Section and accepted by the Board of Rules and Appeals (BORA) to be used in Miami Dade County and other areas where allowed by the Authority Having Jurisdiction (AHJ).

This NOA shall not be valid after the expiration date stated below. The Miami-Dade County Product Control Section (In Miami Dade County) and/or the AHJ (in areas other than Miami Dade County) reserve the right to have this product or material tested for quality assurance purposes. If this product or material fails to perform in the accepted manner, the manufacturer will incur the expense of such testing and the AHJ may immediately revoke, modify, or suspend the use of such product or material within their jurisdiction. BORA reserves the right to revoke this acceptance, if it is determined by Miami-Dade County Product Control Section that this product or material fails to meet the requirements of the applicable building code.

This product is approved as described herein, and has been designed to comply with the Florida Building Code, including the High Velocity Hurricane Zone.

DESCRIPTION: JS Series Outswing Glazed Wood Windows-LMI

Limitation:

1. Raised Wood panels are limited to max. 7.81 sqft, in combination with Glass.

APPROVAL DOCUMENT: Drawing No **JS-3-Out**, titled "JS Outswing Wood Windows" Sheets 1 through 10 of 10, dated 01-10-99 and last revised on Jan 25, 2011, prepared by manufacturer, signed and sealed by Scott Wolters, P. E. , bearing the Miami-Dade County Product Control Renewal stamp with the Notice of Acceptance number and expiration date by the Miami-Dade County Product Control Division.

MISSILE IMPACT RATING: Large & Small Missile Impact Resistant

LABELING: Each unit shall bear a permanent label with M.Q. Windows, **Ste-Agathe des Monts, Quebec, Canada** and following statement: "Miami-Dade County Product Control Approved", unless otherwise noted herein.

RENEWAL of this NOA shall be considered after a renewal application has been filed and there has been no change in the applicable building code negatively affecting the performance of this product.

TERMINATION of this NOA will occur after the expiration date or if there has been a revision or change in the materials, use, and/or manufacture of the product or process. Misuse of this NOA as an endorsement of any product, for sales, advertising or any other purposes shall automatically terminate this NOA. Failure to comply with any section of this NOA shall be cause for termination and removal of NOA.

ADVERTISEMENT: The NOA number preceded by the words Miami-Dade County, Florida, and followed by the expiration date may be displayed in advertising literature. If any portion of the NOA is displayed, then it shall be done in its entirety.

INSPECTION: A copy of this entire NOA shall be provided to the user by the manufacturer or its distributors and shall be available for inspection at the job site at the request of the Building Official.

This NOA **renews NOA # 06-0208.04** and consists of this page 1 and evidence pages E-1, as well as approval document mentioned above.

The submitted documentation was reviewed by **Ishaq I. Chanda, P.E.**

MIAMI-DADE COUNTY APPROVED

2/1/11

M. Q. Windows

NOTICE OF ACCEPTANCE: EVIDENCE SUBMITTED

A. DRAWINGS

1. Manufacturer's Parts drawings and sections (transferred from file # **06-0208.04**)
2. Drawing No **JS-3-Out**, titled "JS Outswing Wood Windows" Sheets 1 through 10 of 10, dated 01-10-99 and last revised on Jan 17, 2011, prepared by manufacturer, signed and sealed by Scott Wolters, P. E.

B. TESTS

1. Test reports on 1) Air Infiltration Test, per FBC, TAS 202-94
   2) Uniform Static Air Pressure Test, Loading per FBC, TAS 202-94.
   3) Water Resistance Test, per FBC, TAS 202-94.
   4) Large Missile Impact Test per FBC, TAS 201-94

Along with the manufacturer's parts drawings and marked-up drawings of Round shaped outswing wood Windows prepared by Hurricane Test Laboratory, LLC, Test Report No **HTL-0118-0204.03** (sample MQ#1) dated 02/20/2004, signed and sealed by Vinu J. Abraham, P.E.

2. Test reports on 1) Air Infiltration Test, per FBC, TAS 202-94
   2) Uniform Static Air Pressure Test, Loading per FBC, TAS 202-94.
   3) Water Resistance Test, per FBC, TAS 202-94.
   4) Large Missile Impact Test per FBC, TAS 201-94
   5) Cyclic Wind Pressure Loading per FBC, TAS 203-94
   6) Forced Entry Test, per FBC 2411 3.2.1 and TAS 202-94

along with the manufacturer's parts drawings, installation diagram and marked-up drawings of an Inswing wood window Test Report # **HTL-0118-0702-98** & Outswing Wood Windows Test Report # **HTL-0118-0702-98**, prepared by Hurricane Test Laboratory, LLC, signed and sealed by Vinu J. Abraham, P.E. (Test reports transferred from file # **06-0208.04**)

3. Additional test reports transferred from file # **99-1228.05:**

3.1 Test Report No. **HTL-0118-1103-98(Sp# 1, 2, 3 & 7), HTL-0118-1006-98 (Sp4 & 7) HTL-0118-1218-98 (Sp#1), HTL-0118-0702-99 (Sp#1),** along with manufacturer's parts and section marked drawings of Inswing/Outswing Doors, prepared by Hurricane Testing Laboratories, dated 10/15//98 thru 07-06-99, signed and sealed by Timothy S. Marshall, P.E., per SFBC, PA 201, 202 & 203(now known as FBC, TAS 201, 202 & 203-94)

3.2 Test reports No(s) **HTL-G118-1108.06** (sample #1, 3 & 4) and **HTL- G118-1108.06** (unit #2), for inswing tilt & turn Windows, issued by Hurricane Testing Lab, both dated 08/07/2007, signed and sealed by Vinu J. Abraham, P.E.

3.3 Test Report No **HTL-0118-1218-98,** issued by Hurricane Test Laboratory, LLC, for wood fixed windows, signed & sealed by Timothy S. Marshall, P.E.

Ishaq I. Chanda

Ishaq I. Chanda, P.E.
Product Control Examiner
NOA No 10-1021.06
Expiration Date: February 08, 2016
Approval Date: February 24, 2011

NOTICE OF ACCEPTANCE: EVIDENCE SUBMITTED

C. CALCULATIONS

1. Statement letter dated 01/25/11, issued by Wolters Engineering Inc., of Succeeding Engineer adopting the another Engineer's work and engineering responsibilities and stating conformance to FBc 2007, signed and sealed by Scott Wolters, P.E.
2. Anchor verification calculations complying w/ FBC-2004, prepared by Tilteco Inc., dated 09/28/05, 03/03/06 and last revised on 03-31-2006, signed and sealed by Walter A. Tillit, Jr., P.E.(transferred from files **#06-0208.04 & #99-1228.05**).
3. Glazing complies w/ ASTME-1300-02 & -04

D. QUALITY ASSURANCE

1. Miami Dade Building and Neighborhood Compliance Department (BNC).

E. MATERIAL CERTIFICATIONS

1. Notice of Acceptance No. 06-0216.06, issued to Solutia Inc, for "Saflex III G interlayer", expiring 05/21/2011.

F. STATEMENTS

1. Statement letter dated 01-25-11, issued by Wolters Engineering Inc., of Succeeding Engineer adopting another Engineer's work, signed and sealed by Scott Wolters, P.E.
2. Stateman letter of conformance and "no financial interest", dated 01-25-11, signed and sealed by Scott Wolters, P. E.
3. Statement letter, issued by MQ windows, dated July 14, 2010 stating the product has not change and requesting renewal, signed by Sylvain Marcotte.
4. Statement letters of compliance, as part of the above test reports.
5. Distribution agreement MQ Windows, Canada and MQ Windows Inc, Dania, Florida dated Nov 30, 201, signed by Gilles Morin, president.

G. OTHER

1. This NOA **renews # 06-0208.04**, expiring February 08, 2011.
2. Test proposal 98-0073 dated August3, 1998 and revised on October 14, 1998, approved by BCCO.

Ishaq I. Chanda

Ishaq I. Chanda, P.E.
Product Control Examiner
NOA No 10-1021.06
Expiration Date: February 08, 2016
Approval Date: February 24, 2011

WINDOWS, OUTSWING
ELEVATION VIEWS
CONFIGURATIONS: x, xx
WOOD: Mahogany
VIEWED FROM THE OUTSIDE

DESIGN PRESSURE APPLYING TO THIS PAGE
Acting inward: +58 psf Acting outward: -68 psf
Note: All sizes noted are maximum sizes. Sizes smaller in width & height are permitted.
Shutters are not required.

GENERAL NOTES:

1- THIS PRODUCT IS DESIGNED TO COMPLY WITH THE PROVISIONS OF THE HIGH VELOCITY HURRICANE ZONE (HVHZ) OF THE 2007 EDITION OF THE FLORIDA BUILDING CODE WITH 2009 SUPPLEMENT.

2- THIS PRODUCT IS LARGE MISSILE IMPACT RESISTANT AND HAS BEEN TESTED IN ACCORDANCE WITH THE HIGH VELOCITY HURRICANE ZONE PROTOCOLS TAS201, 202 AND 203. NO SHUTTERS ARE REQUIRED.

3- WOOD BUCKS (BY OTHERS) AND OPENINGS MUST BE DESIGNED BY THE PROFESSIONAL OF RECORD TO PROPERLY TRANSFER WIND LOADS TO THE MAIN STRUCTURE.

4- SPECIFIED ANCHOR EMBEDMENT TO BASE MATERIAL SHALL BE BEYOND WALL FINISH OR STUCCO.

5- IN ORDER TO VERIFY THAT ANCHORS FOR THIS PRODUCT WERE NOT OVERSTRESSED AS TESTED, A 33% ALLOWABLE STRESS INCREASE **WAS NOT** USED IN THEIR ANALYSIS. HOWEVER, A LOAD DURATION FACTOR OF Cd = 1.6 WAS USED TO VERIFY THEIR SPACING IN WOOD SUBSTRATES.

HINGES TABLE 1

MAX. HINGES SPACING
1488-03 steel hinges by Jordinier Massard secured with with 8 x #7 x 1" F.H. screws

Frame Height (in.) up to	Dist from corner	total Qty	Dist o/c (max)
39 1/2"	8"	2	20 9/16"
59"	8"	3	20 9/16"
79 1/2"	8"	4	20 9/16"
99 3/8"	8"	5	20 9/16"

(#) NOTE: Numbers in circle are referred to the bill of materials on sheet 7.

GLAZING TYPE TABLE
GLASS: SINGLE, LAMINATED
3/16"(AN)-0.090" PVB interlayer Saflex IIIG by Solutia-3/16"(HS)
RAISED WOOD PANEL:
Max. DLO area: -Solid mahogany wood: Max. 7.81 sqf
NOTE: -See Glazing Details on sheet 7

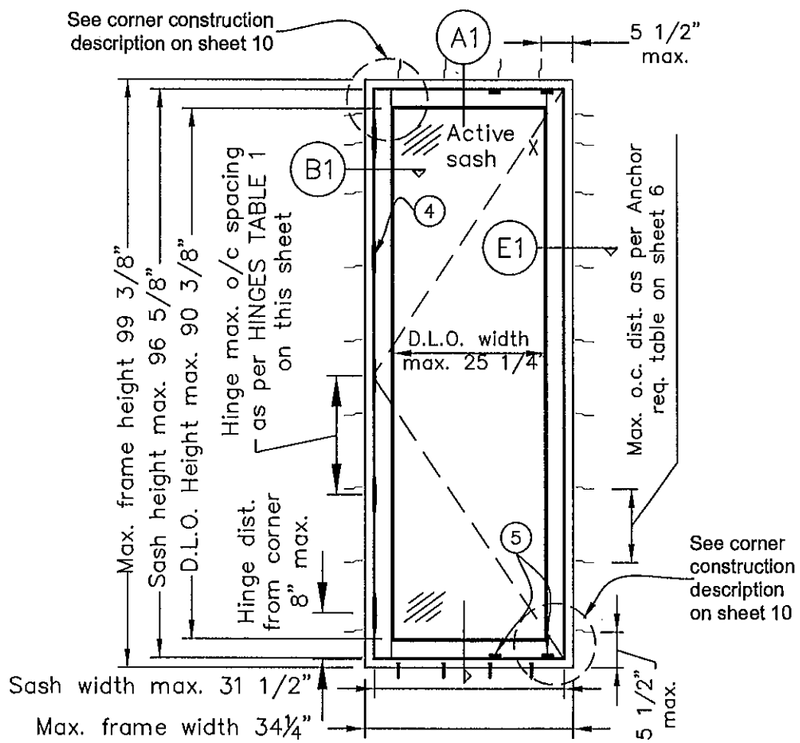

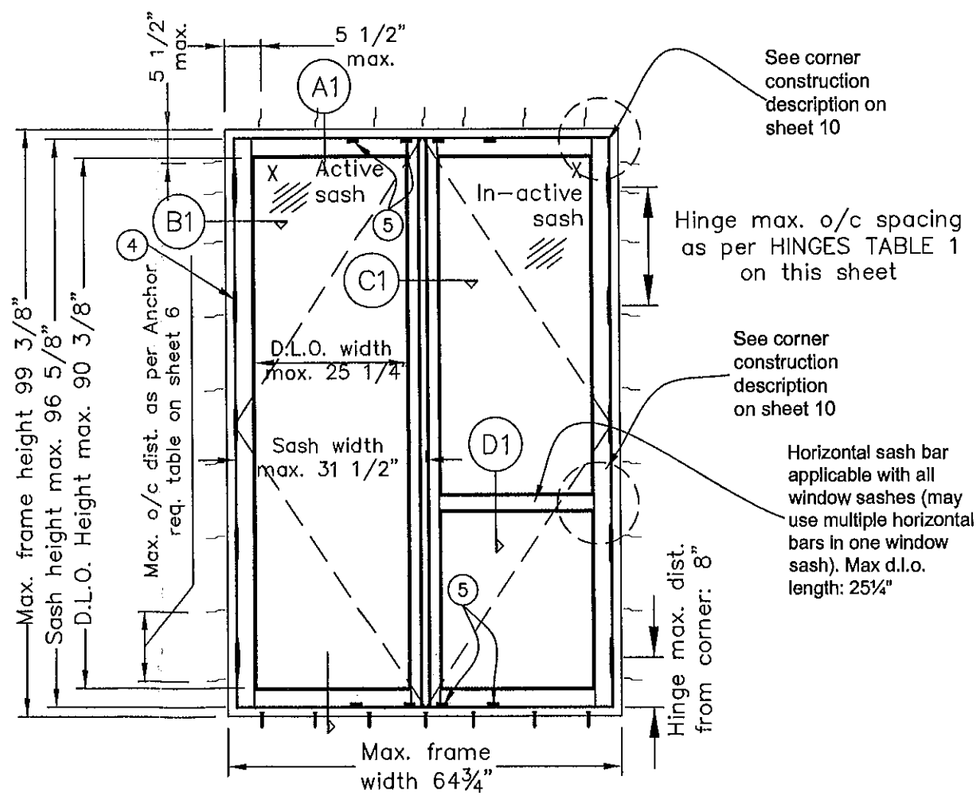

MQ WINDOWS OF EUROPE AND THE AMERICAS
1855 GRIFFIN ROAD, SUITE A-271
DANIA, FL 33004

JS SERIE OUTSWING WOOD WINDOWS MIAMI DADE COUNTY

Drawing no.: JS-3-OUT	
Scale: NONE	Drawn by: S. Marcotte
Date drawn: 01/10/99	Date revised: 01/17/11
File: JS-3-OUT	Page: 1/10

STRUCTURALLY REVIEWED BY:

SCOTT WOLTERS
FL PE# 62354

WOLTERS ENGINEERING, INC.
(COA# 27194)
1271 GRANT STREET
HOLLYWOOD, FL 33019
JAN 25 2011

PRODUCT RENEWED
as complying with the Florida Buiding Code
Acceptance No 10-1021.06
Expiration Date FEB 03, 2016
By
Miami Dade Product Control

WINDOWS, OUTSWING
ELEVATION VIEWS
CONFIGURATIONS: x, xx
WOOD: Mahogany
VIEWED FROM THE OUTSIDE

DESIGN PRESSURE APPLYING TO THIS PAGE
As indicated on elevations
Note: All sizes noted are maximum sizes. Sizes smaller in width & height are permitted.
Shutters are not required.

HINGES TABLE 2

SHAPED HEAD WINDOW
MAX. HINGES SPACING
1488-03 steel hinges by Jardinier Massard secured with with 8 x #7 x 1" F.H. screws

Frame Height (in.) up to	Dist from corner	total Qty	Dist o/c (max)
64"	8"	2	22 1/4"
86"	8"	3	22 1/4"

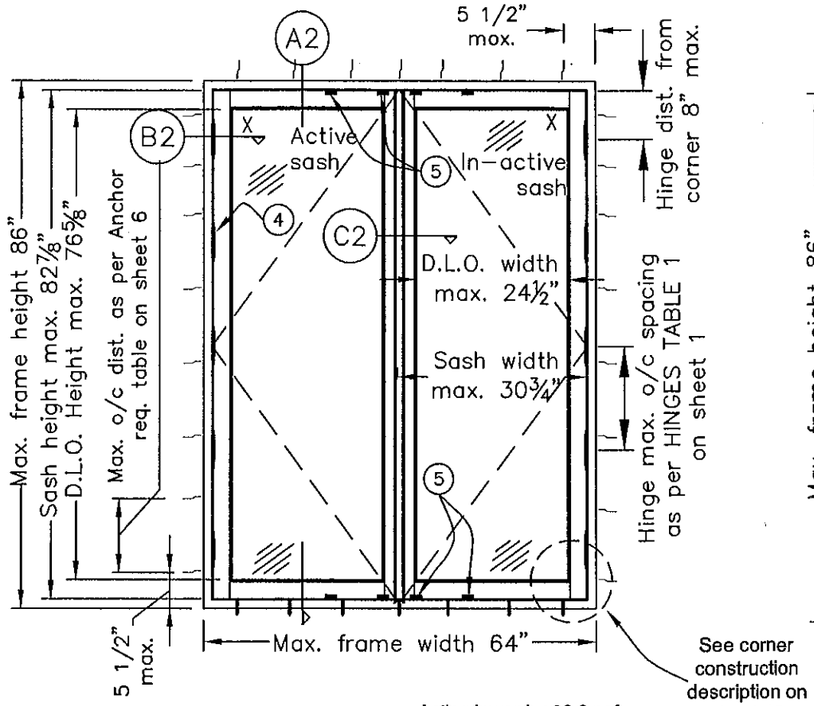

DESIGN PRESSURE RATING

Acting inward: +60.0 psf
Acting outward: -68.0 psf

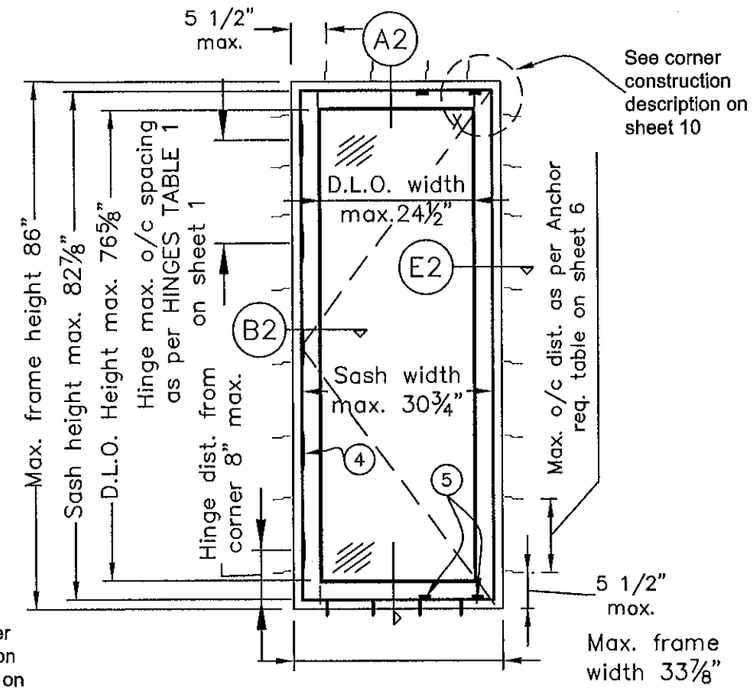

DESIGN PRESSURE RATING:

Acting inward: +58.0 psf
Acting outward: -68.0 psf

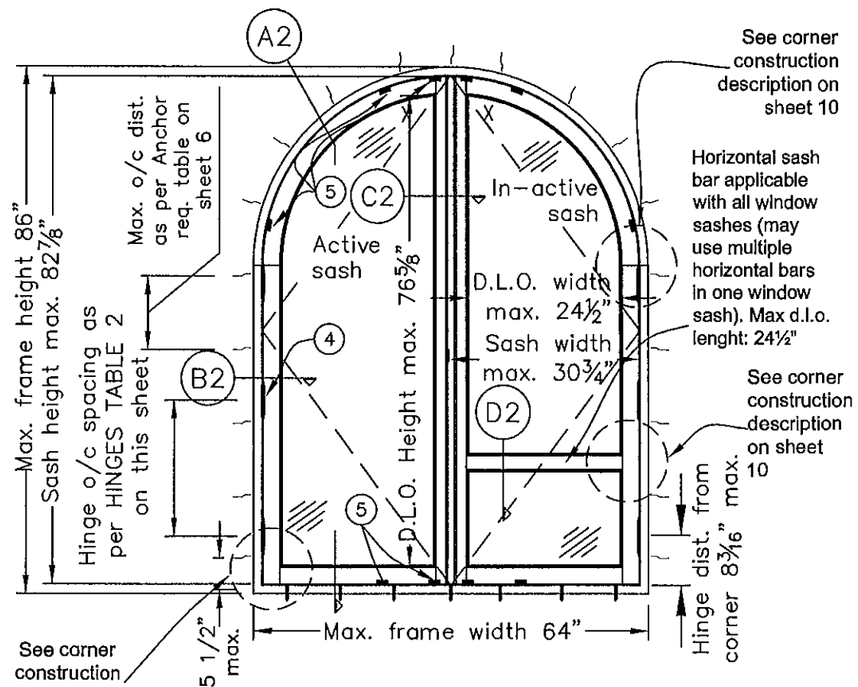

DESIGN PRESSURE RATING

Acting inward: +60.0 psf
Acting outward: -68.0 psf

APPROVED SHAPES

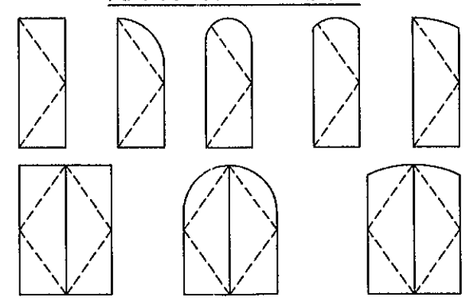

NOTES:
1. Other shapes may apply providing they are similar to those shown & have corner construction as described on sheet 10.
2. All shaped units must fit inscribed into the allowable rectangular units & be governed by the allowable pressure of the respective rectangular unit.
3. Approved shaped heads on this sheet conform to cross section A2 on sheet 4.
4. Keepers qty & location identical to shown arched unit. For single panel full arched unit, keepers at head evenly distributed.

(#) NOTE: Numbers in circle are referred to the bill of materials on sheet 7.

GLAZING TYPE TABLE
GLASS: SINGLE, LAMINATED
OPTION 1: 15/32" (O.T.) Made of 3/16"(AN)-0.090" PVB interlayer, Saflex IIIG by Solutia-3/16"(HS)
OPTION 2: 15/32" (O.T.) Made of 3/16"(HS)-0.090" PVB interlayer, Saflex IIIG by Solutia-3/16"(HS)
GLASS: DOUBLE, INSULATED
OPTION 1: 1" (O.T.) Made of: 3/16" (AN) – 0.090" PVB interlayer, Saflex IIIG by Solutia – 3/16" (HS) – 0.377" air space – 5/32" (AN).
OPTION 2: 1" (O.T.) Made of: 3/16" (HS) – 0.090" PVB interlayer, Soflex IIIG by Solutia – 3/16" (HS) – 0.377" air spoce – 5/32" (AN).
RAISED WOOD PANEL:
Max. DLO area: Solid mahogany wood: Max. 7.81 sqf
NOTE: -See Glazing Details on sheet 7

MQ WINDOWS OF EUROPE AND THE AMERICAS
1855 GRIFFIN ROAD, SUITE A-271
DANIA, FL 33004

JS SERIE OUTSWING WOOD WINDOWS MIAMI DADE COUNTY

Drawing no.: JS-3-OUT	
Scale: NONE	Drawn by: S. Marcotte
Date drawn: 01/10/99	Date revised: 01/17/11
File: JS-3-OUT	Page: 2/10

STRUCTURALLY REVIEWED BY:

SCOTT WOLTERS
FL PE# 62354
WOLTERS ENGINEERING, INC.
(COA# 27194)
1271 GRANT STREET
HOLLYWOOD, FL 33019
JAN 25 2011

PRODUCT RENEWED
as complying with the Florida Building Code
Acceptance No. 6-1021.06
Expiration Date FEB 08, 2016
By
Miami Dade Product Control

CROSS SECTION VIEWS

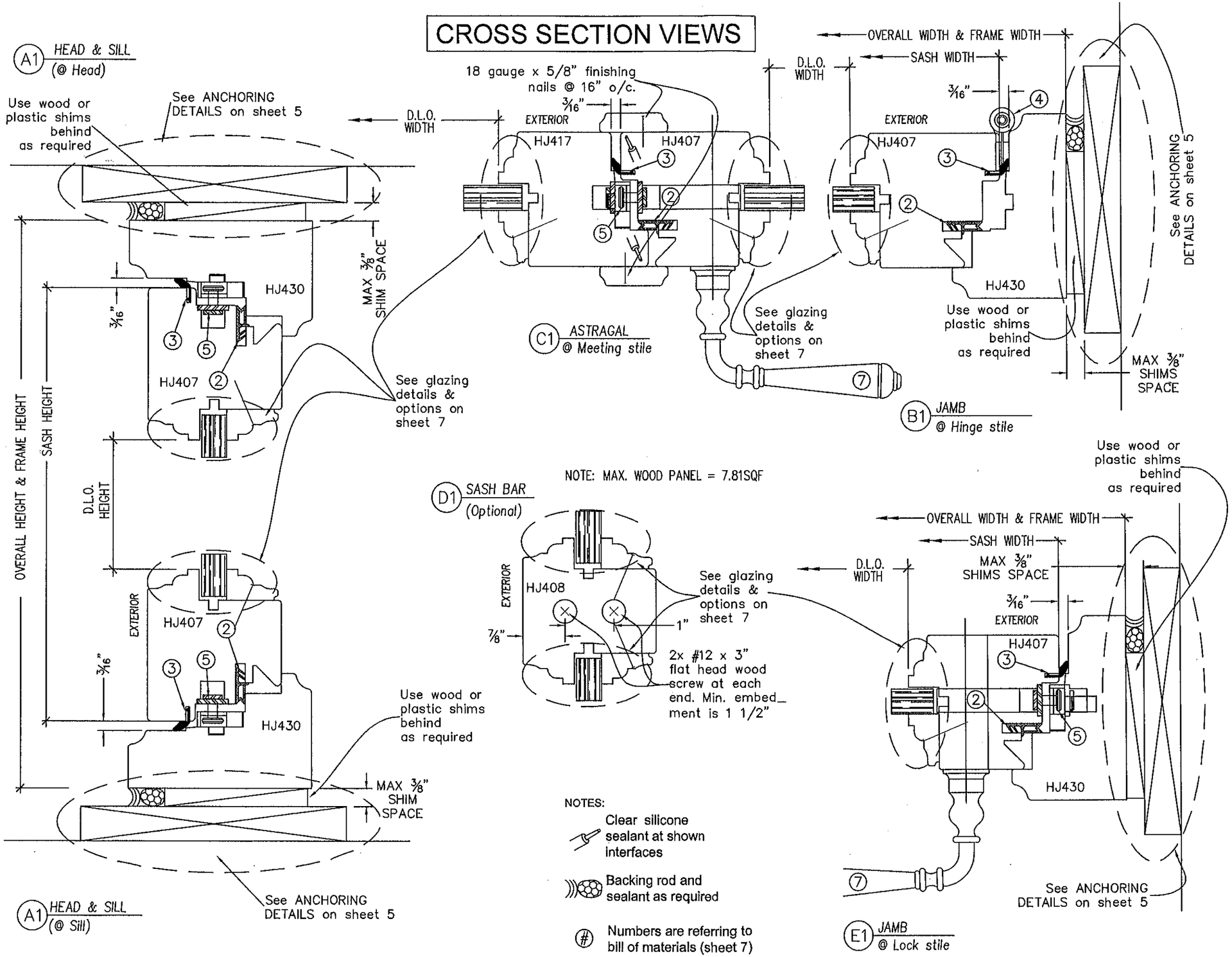

MQ WINDOWS OF EUROPE AND THE AMERICAS
1855 GRIFFIN ROAD, SUITE A-271
DANIA, FL 33004

JS SERIE OUTSWING WOOD WINDOWS MIAMI DADE COUNTY

Drawing no.: JS-3-OUT	
Scale: NONE	Drawn by: S. Marcotte
Date drawn: 01/10/99	Date revised: 01/17/11
File: JS-3-OUT	Page: 3/10

STRUCTURALLY REVIEWED BY:

SCOTT WOLTERS
FL PE# 62354

WOLTERS ENGINEERING, INC.
(COA# 27194)
1271 GRANT STREET
HOLLYWOOD, FL 33019
JAN 25 2011

PRODUCT RENEWED
as complying with the Florida Building Code
Acceptance No. 10-1021.06
Expiration Date FEB 03, 2016
By Ishaq I. Chanda
Miami Dade Product Control

CROSS SECTION VIEWS

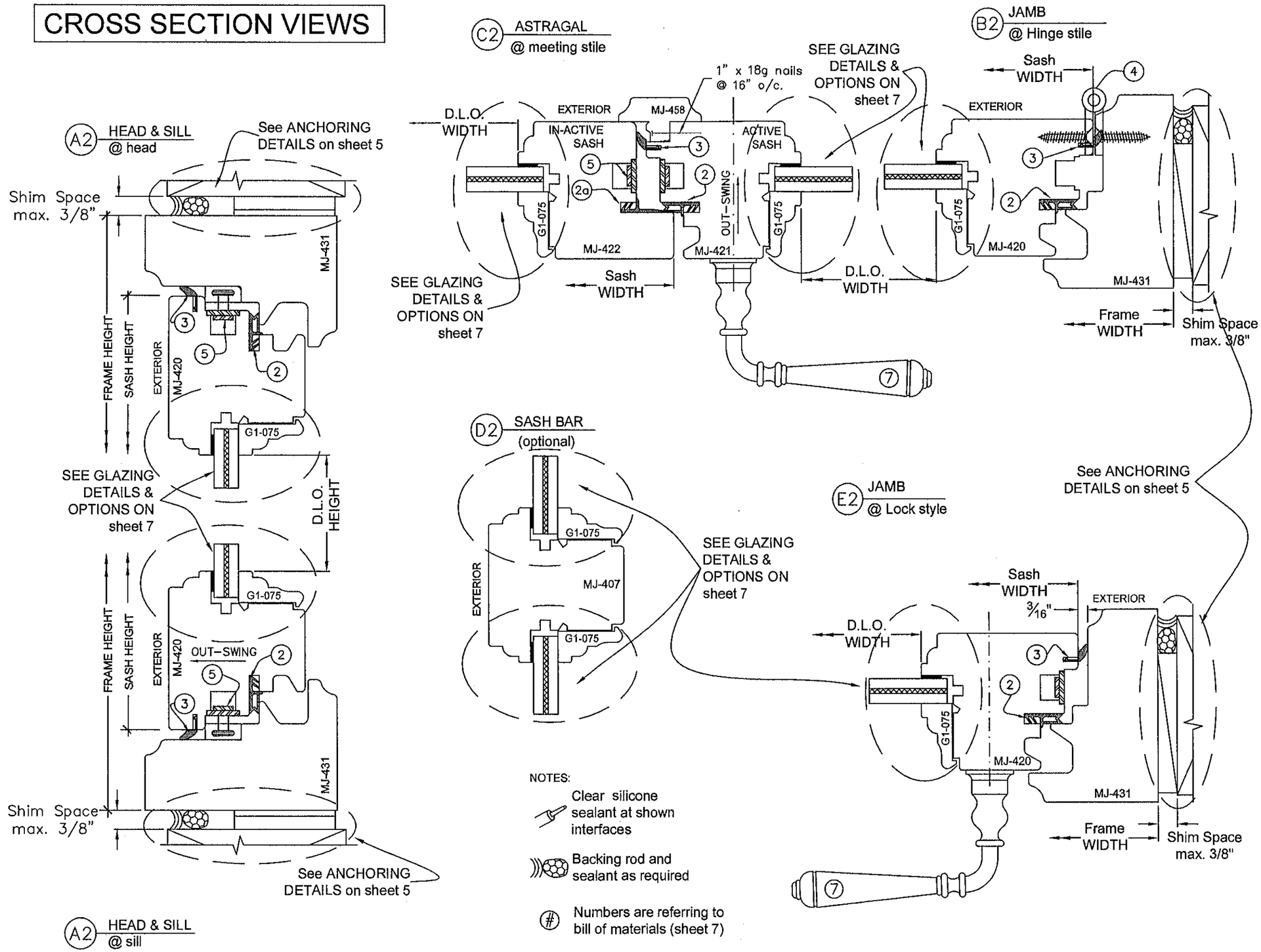

MQ WINDOWS OF EUROPE AND THE AMERICAS
1855 GRIFFIN ROAD, SUITE A-271
DANIA, FL 33004

JS SERIE OUTSWING WOOD WINDOWS MIAMI DADE COUNTY

Drawing no.: JS-3-OUT	
Scale: NONE	Drawn by: S. Marcotte
Date drawn: 01/10/99	Date revised: 05/04/06
File: JS-3-OUT	Page: 4/10

STRUCTURALLY REVIEWED BY:

SCOTT WOLTERS
FL PE# 62354

WOLTERS ENGINEERING, INC.
(COA# 27194)
1271 GRANT STREET
HOLLYWOOD, FL 33019
JAN 25 2011

PRODUCT RENEWED
as complying with the Florida Building Code
Acceptance No. 10-1021.06
Expiration Date FEB 08, 2016
By
Miami Dade Product Control

ANCHORING DETAILS VIEWS

A10 - Typical direct anchor on 2x wood buck using wood screws. Size and spacing as per ANCHOR REQUIREMENTS TABLE on sheet 6.

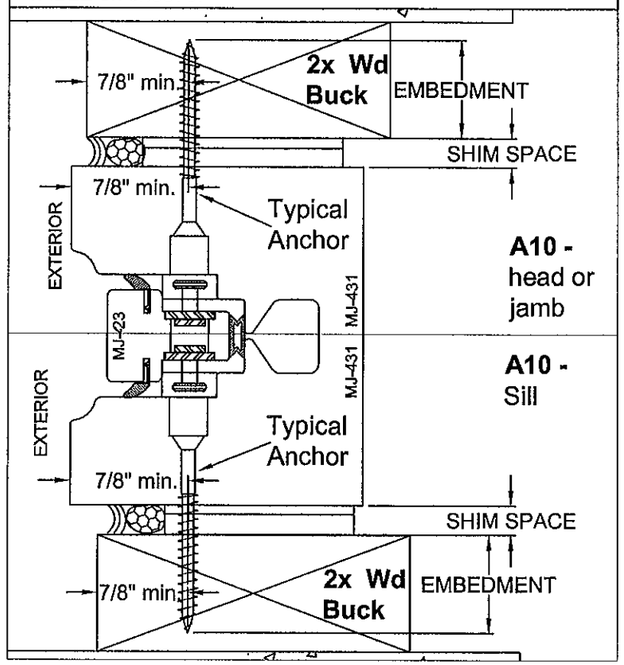

B10 - Typical anchor using Installation Bracket (8) on 2x wood buck using wood screws as per ANCHOR REQUIREMENTS TABLE on sheet 6.

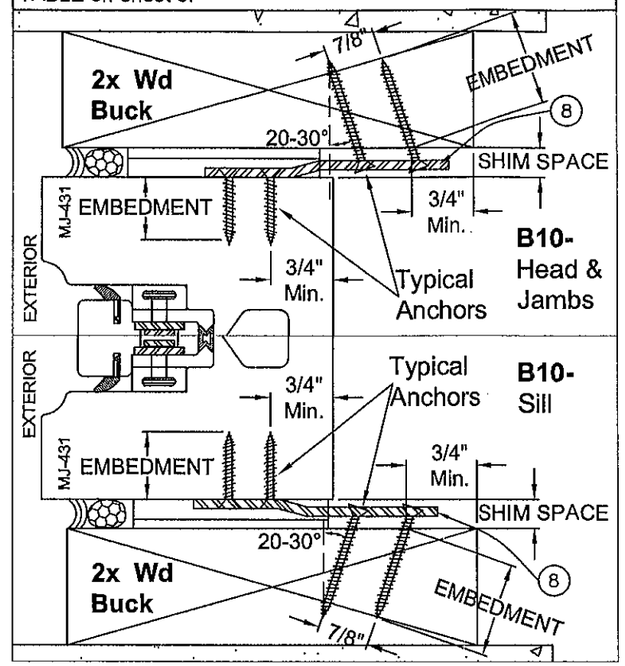

C10 - Typical anchor (@ sill only) w/ Continuous Aluminum Angle (8a) using wood screws in 2x wood buck and window frame. Size and spacing as per ANCHOR REQUIREMENTS TABLE on sheet 6.

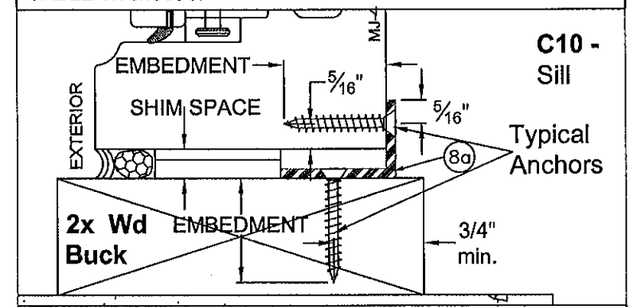

C10 - Alternate typical anchor location for the continuous aluminum Angle (8a)

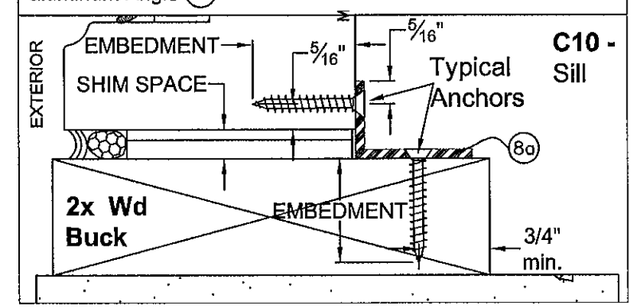

A20 - Typical direct anchor through 1x wood buck into concrete using Tapcon screws. Size and spacing as per ANCHOR REQUIREMENTS TABLE on sheet 6.

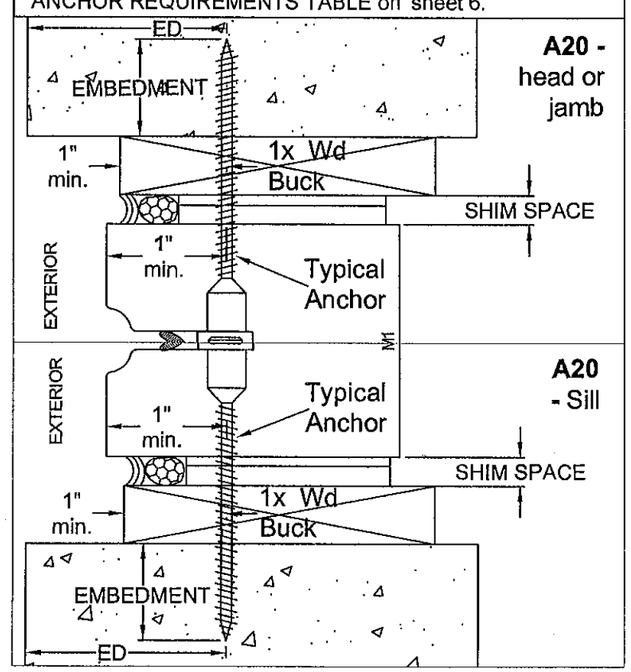

B20 - Typical anchor w/ Installation Bracket (8) using Tapcon screws through 1x wood buck into concrete as per ANCHOR REQUIREMENTS TABLE on sheet 6.

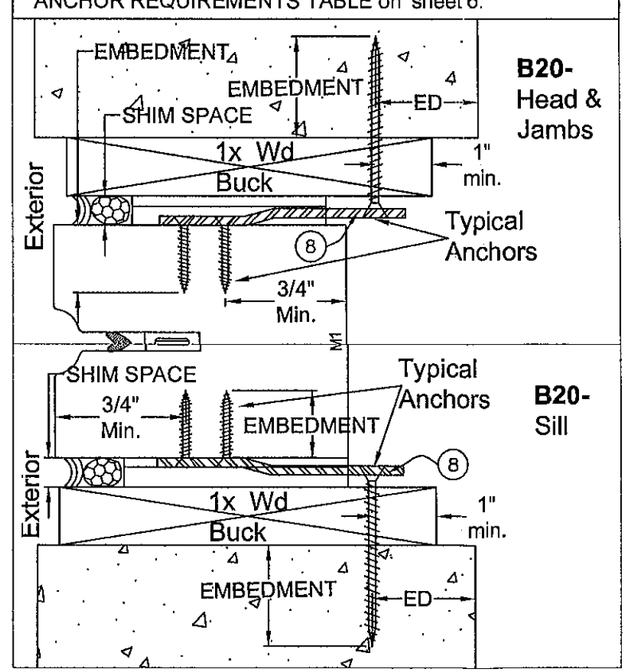

C20 - Typical anchor w/ Continuous Aluminum Angle (8a) using Tapcon screws through 1x wood buck into concrete and wood screw into window frame. Size and spacing as per ANCHOR REQUIREMENTS TABLE on sheet 6.

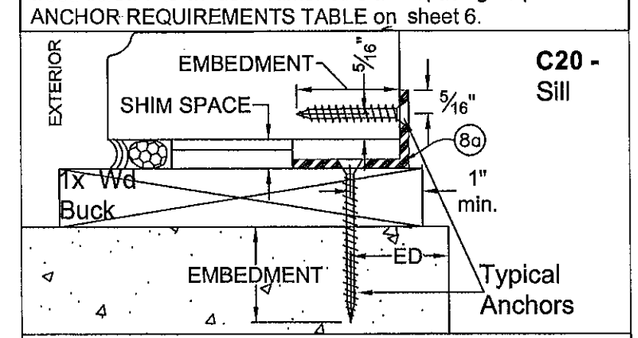

Alternate typ. anchor location for the cont. aluminum Angle (8a)

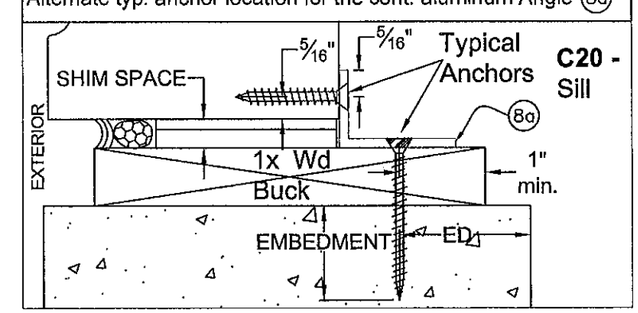

WINDOWS OF EUROPE AND THE AMERICAS

1855 GRIFFIN ROAD, SUITE A-271 DANIA, FL 33004

JS SERIE
OUTSWING
WOOD WINDOWS
MIAMI DADE COUNTY

Drawing no.: JS-3-OUT	
Scale: NONE	Drawn by: S. Marcotte
Date drawn: 01/10/99	Date revised: 05/04/06
File: JS-3-OUT	Page: 5/10

STRUCTURALLY REVIEWED BY:

SCOTT WOLTERS
FL PE# 62354

WOLTERS ENGINEERING, INC.
(COA# 27194)
1271 GRANT STREET
HOLLYWOOD, FL 33019

JAN 25 2011

PRODUCT RENEWED
as complying with the Florida
Building Code
Acceptance No 10-1021.06
Expiration Date FEB 05 2016
By Ishag I. Chang
Miami Dade Product Control

ANCHOR REQUIREMENTS TABLE

Anchoring method	Sub-strate	Inst. Ref. No.	Fasteners type, size & embedment	Spacing From corner	Spacing On center	Min. dist. from wood buck edge	Min. dist. from concr. edge (ED)	Min. dist. from unit frame edge	Min. embedment Into buck/ concrete	Min. embedment Into unit frame
Direct anchor (shear screws)	2x_ wood buck	**A10 4 sides**	Through the unit frame into the buck frame: (1) #14 x 2 3/4" wood screw.	5½"	4½"	7/8"	-----	7/8"	1 ¼"	-----
	1x_ wood buck	**A20 4 sides**	Through the buck frame into the masonry: (1) 1/4" x 2 3/4" Elco / Textron Tapcon screw.	5½"	5½"	1 "	2½"	1 "	1 ¼"	-----
PDF-FS-05/D Installation bracket	2x_ wood buck	**B10 4 sides**	To the buck frame: (2) #12 X 1 1/2" all threaded (a.T.) wood screws. Into the unit frame: (2) # 10 x 1" a.T. wood screws.	5½"	11"	3/4"	-----	3/4"	1 ¼"	7/8"
	1x_ wood buck	**B20 4 sides**	Through the buck frame into the masonry: (1) 1/4" x 2 3/4" Elco / Textron Tapcon screw. Into the unit frame: (2) #10 x 1" a.T. wood screws.	5½"	10 ½"	1 "	2½"	3/4"	1 ¼"	7/8"
Continuous aluminum angle (At sill only)	2x_ wood buck	**C10 sill**	To the window sill and to the buck frame with (1) #12 x1 1/2" a. T. wood screw.	5½"	9"	3/4"	-----	5/16"	1 ¼"	1 ¼"
	1x_ wood buck	**C20 sill**	Through the buck frame into the f'c= 3320 psi. concrete: 1/4" x 2 3/4" Elco / Textron Tapcon screw. Into the unit sill: (1) #12 x1 1/2".	5½"	10"	1 "	2½"	5/16"	1 ¼"	1 ¼"

NOTES:
-All shim spaces between window frame and wood buck max. 3/8" @ head, jambs and sill. Use std wood or plastic shims.
-Jambs anchoring identical to head anchoring shown
-Wood bucks (by others) and openings must be designed by the professional of record to properly transfer wind loads to the main structure.
-Installation brackets (8) and aluminun angles (8a) may be positioned at the interior or exterior side of the window.
-Materials, but not limited to steel & steel screws that come in contact with other dissimilar materials shall meet with section 2003.8.4 of the Florida Building Code, 2004 edition with the 2005 supplement.

Backing rod and sealant as required

(#) Numbers in circle are referring to bill of materials (sheet 7)

MQ WINDOWS OF EUROPE AND THE AMERICAS
1855 GRIFFIN ROAD, SUITE A-271 DANIA, FL 33004

JS SERIE
OUTSWING
WOOD WINDOWS
MIAMI DADE COUNTY

Drawing no.: JS-3-OUT	
Scale: NONE	Drawn by: S. Marcotte
Date drawn: 01/10/99	Date revised: 05/04/06
File: JS-3-OUT	Page: 6/10

STRUCTURALLY REVIEWED BY:

SCOTT WOLTERS
FL PE# 62354
WOLTERS ENGINEERING, INC.
(COA# 27194)
1271 GRANT STREET
HOLLYWOOD, FL 33019
JAN 25 2011

PRODUCT RENEWED
as complying with the Florida Building Code
Acceptance No 10-1021.06
Expiration Date FEB 08 2016
By Ishag I. Chaya
Miami Dade Product Control

GLAZING DETAILS

Typ. glazing w/ monolithic laminated glass

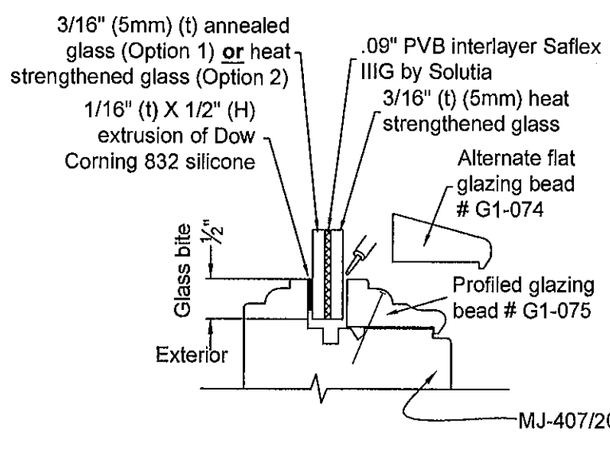

Typ. glazing w/ double insulated glass

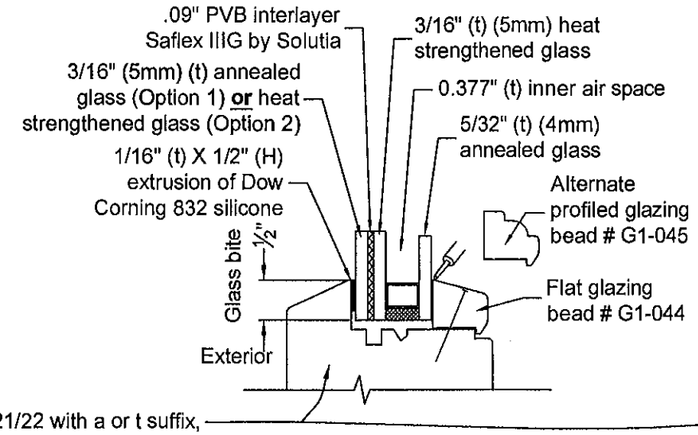

Typ. glazing w/ raised wood panel

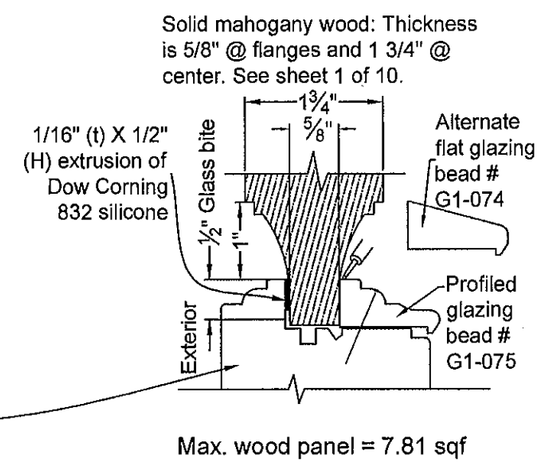

NOTE: All glazing beads fixed at the glass perimeter w/ #18 gauge x 1" long finishing nails spaced 2" from the corners and 10" o/c.

ACCESSORIES

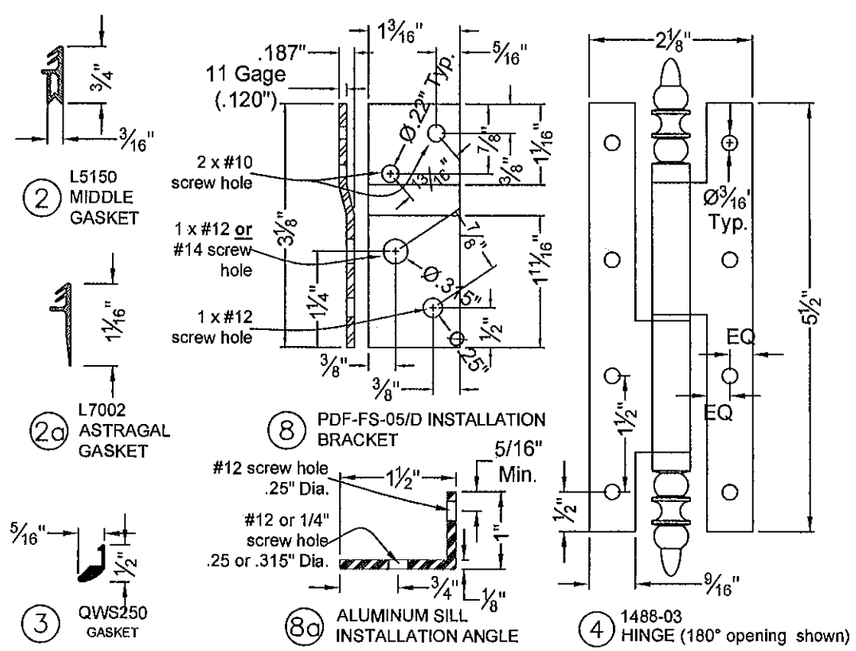

BILL OF MATERIALS

(see also related cross sections details)

Ref.	ITEM DESCRIPTION	MANUFACTURER / NOTES
2	Brügman L5150, Push-in EPDM middle gasket	Push-in gasket, in a continuous groove around the sash.
2a	Brügman L7002, Push-in EPDM In-active astragal meeting stile middle gasket	Push-in gasket in a continuous groove. Ends @ sash's head & sill glued to the L5150 gasket
3	Schlegel QWS250 Polyurethane foam gasket.	Push-in gasket, in a continuous groove around the sash. Mitre cut @ corners.
4	Jardinier Massard S.A. 1488-03 painted steel hinges	Qty, max. o/c & from corner dist. as per MAX. HINGES SPACING table on sheet 1. Fasteners: 4x #7 x 1" flat head screws on sash and frame for each hinge.
5	Ferco multi-point lock system.	Ferco G-20755 corner gear Ferco 6-26295 steel intermediate arm Ferco 6-25485 steel mechanism Ferco 6-26076 steel lever. Bronze cast alloy keeper, #833856.
7	Lock handle	As required to operate lock.
8	PDF-FS-05/D Installation bracket Gage 11 ASTM A653 SQ 33 G90 galvanized steel	For Anchor types, sizes and spacing, see ANCHOR REQUIREMENTS TABLE on sheet 6
8a	Installation Aluminum angle (Alloy 6063-T5)	Screwed to wood sill and to structure as per ANCHOR REQUIREMENTS TABLE on sheets 6

(#) REF. NUMBERS ARE RELATED TO THOSE USED ON CROSS SECTIONS DRAWINGS

MQ WINDOWS OF EUROPE AND THE AMERICAS
1855 GRIFFIN ROAD, SUITE A-271
DANIA, FL 33004

JS SERIE
OUTSWING
WOOD WINDOWS
MIAMI DADE COUNTY

Drawing no.: JS-3-OUT	
Scale: NONE	Drawn by: S. Marcotte
Date drawn: 01/10/99	Date revised: 01/17/11
File: JS-3-OUT	Page: 7/10

STRUCTURALLY REVIEWED BY:

SCOTT WOLTERS
FL PE# 62354

WOLTERS ENGINEERING, INC.
(COA# 27194)
1271 GRANT STREET
HOLLYWOOD, FL 33019

JAN 25 2011

PRODUCT RENEWED
as complying with the Florida Building Code
Acceptance No. 10-1021.06
Expiration Date FEB 03, 2016
By
Miami Dade Product Control

WOOD PROFILES

NOTES:
-These profiles apply to elevations on sheet 1 only.

-All profiles dimensions are minimum dimensions.

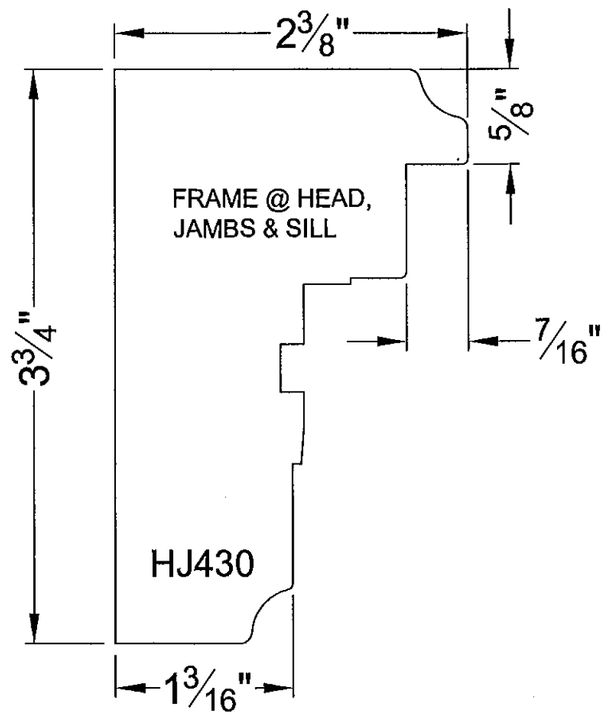

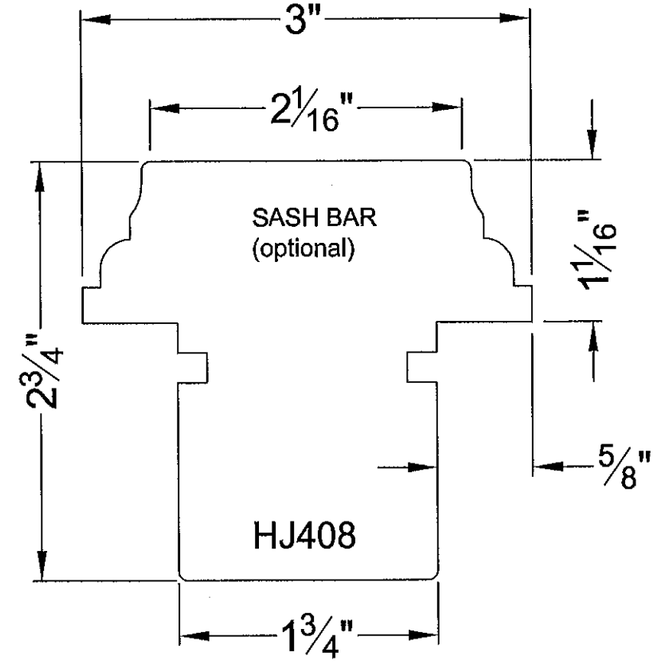

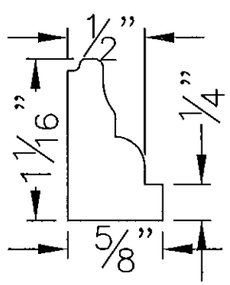

GJ064
GLAZING BEAD

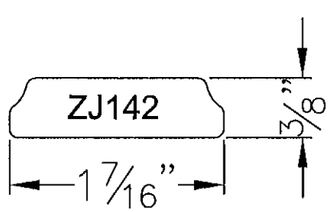

ASTRAGAL MOULDING

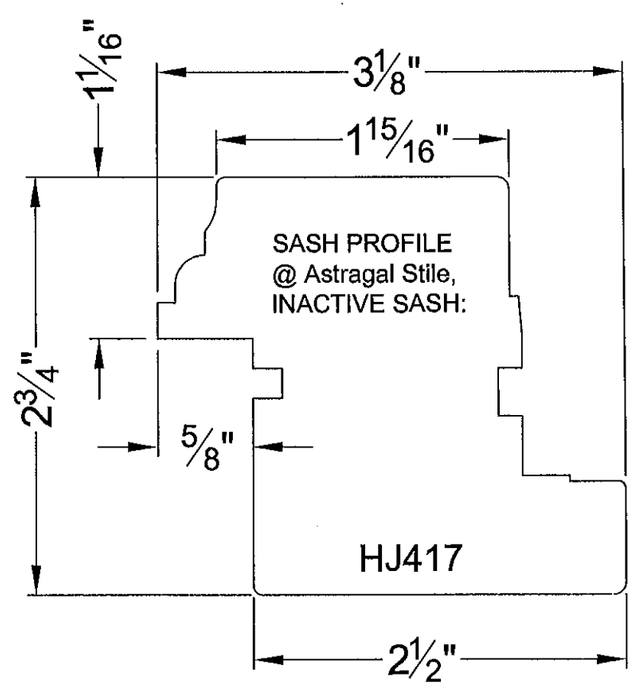

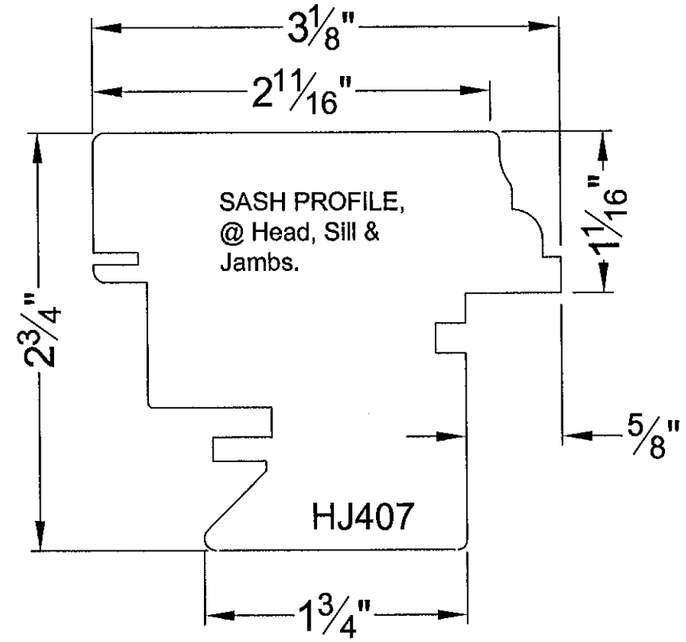

MQ WINDOWS OF EUROPE AND THE AMERICAS
1855 GRIFFIN ROAD,
SUITE A-271
DANIA, FL 33004

JS SERIE
OUTSWING
WOOD WINDOWS
MIAMI DADE COUNTY

Drawing no.: JS-3-OUT	
Scale: NONE	Drawn by: S. Marcotte
Date drawn: 01/10/99	Date revised: 05/04/06
File: JS-3-OUT	Page: 8/10

STRUCTURALLY REVIEWED BY:

SCOTT WOLTERS
FL PE# 62354

WOLTERS ENGINEERING, INC.
(COA# 27194)
1271 GRANT STREET
HOLLYWOOD, FL 33019
JAN 25 2011

PRODUCT RENEWED
as complying with the Florida
Building Code
Acceptance No. 10-1021.06
Expiration Date FEB 05 2016
By Ishaq I Chanda
Miami-Dade Product Control

WOOD PROFILES

NOTE: All profiles dimensions shown are minimum dimensions.

Alternate glazing fence details

Flat glazing fence: Part number w/ "a" suffix.

Moulded glazing fence: Part number w/ "t" suffix.

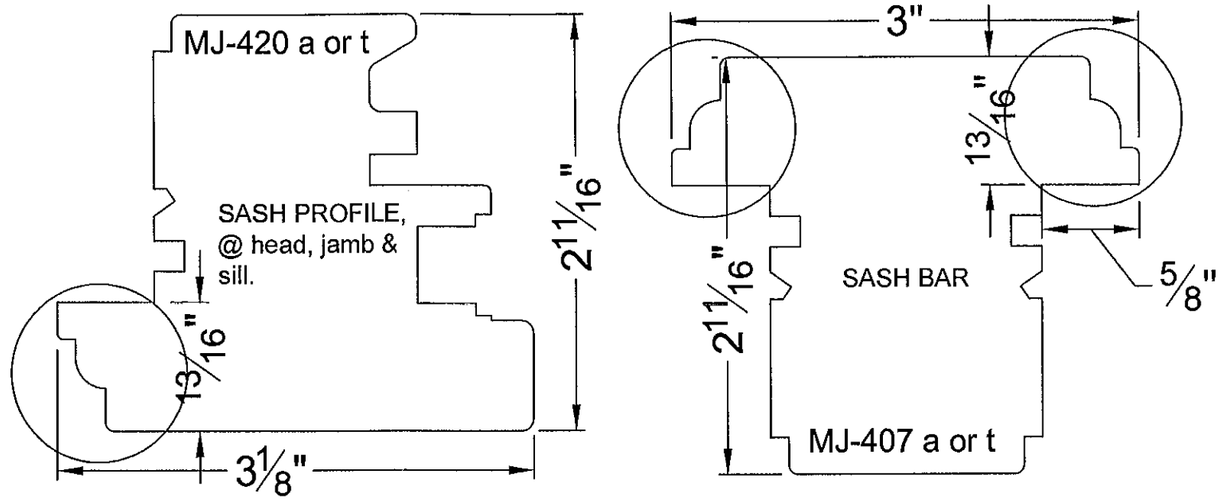

NOTE: These profiles apply to elevations on sheet 2 only

See Alternate glazing fence details on this sheet

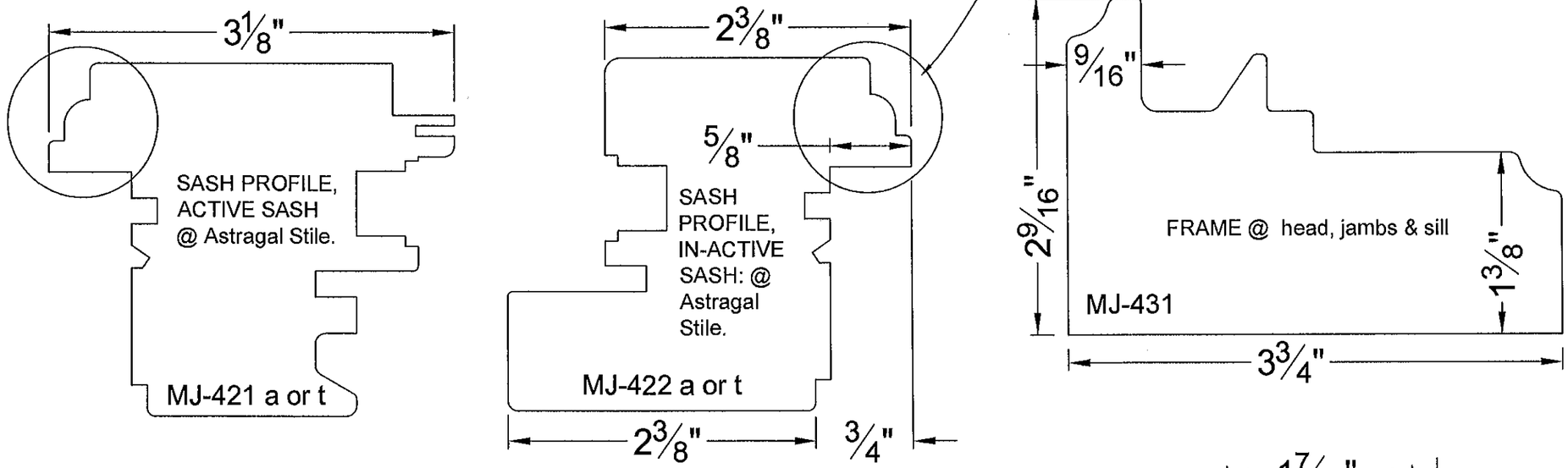

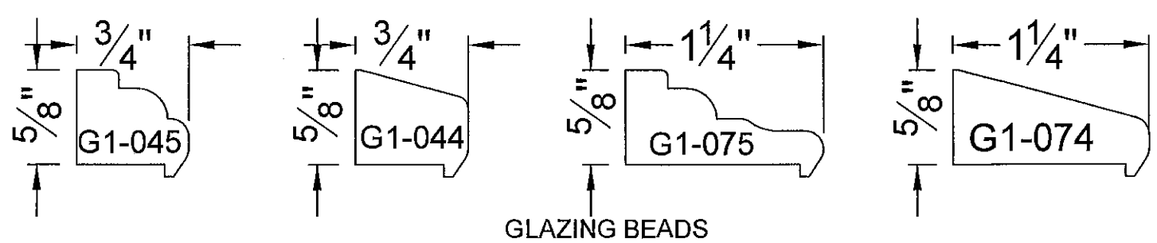

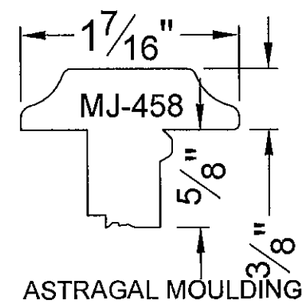

MQ WINDOWS OF EUROPE AND THE AMERICAS
1855 GRIFFIN ROAD, SUITE A-271
DANIA, FL 33004

JS SERIE
OUTSWING
WOOD WINDOWS
MIAMI DADE COUNTY

Drawing no.: JS-3-OUT	
Scale: NONE	Drawn by: S. Marcotte
Date drawn: 01/10/99	Date revised: 05/04/06
File: JS-3-OUT	Page: 9/10

STRUCTURALLY REVIEWED BY:

SCOTT WOLTERS
FL PE# 62354

WOLTERS ENGINEERING, INC.
(COA# 27194)
1271 GRANT STREET
HOLLYWOOD, FL 33019

JAN 25 2011

PRODUCT RENEWED
as complying with the Florida Building Code
Acceptance No. 10-1021.06
Expiration Date FEB 08 2016
By Ishaq I. Chowdhury
Miami-Dade Product Control

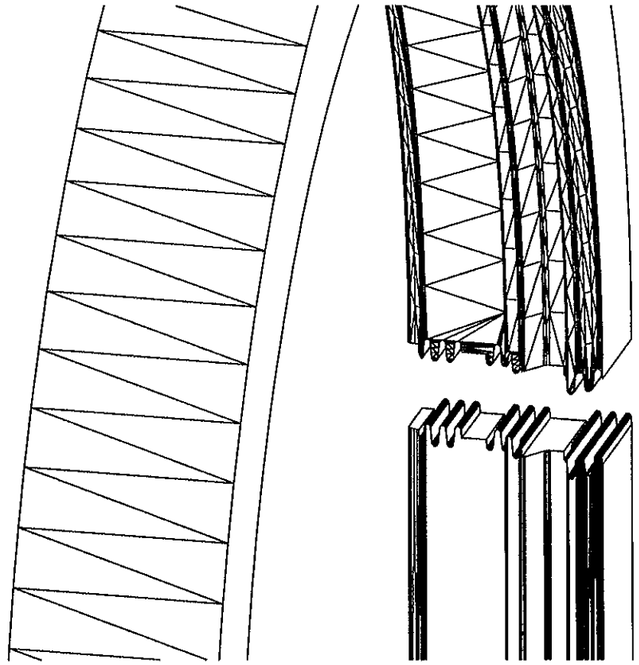

Finger Joints assembly for full arched members; Glue: Rhenocoll 3W-4B type 1 exterior glue for wood.

Sash rails to sash stiles: 4x 7/16" x 2 3/4" wood dowels, w/ 1 3/8" embedment to each profile
Glue: Rhenocoll 3W-4B type 1 exterior glue for wood.

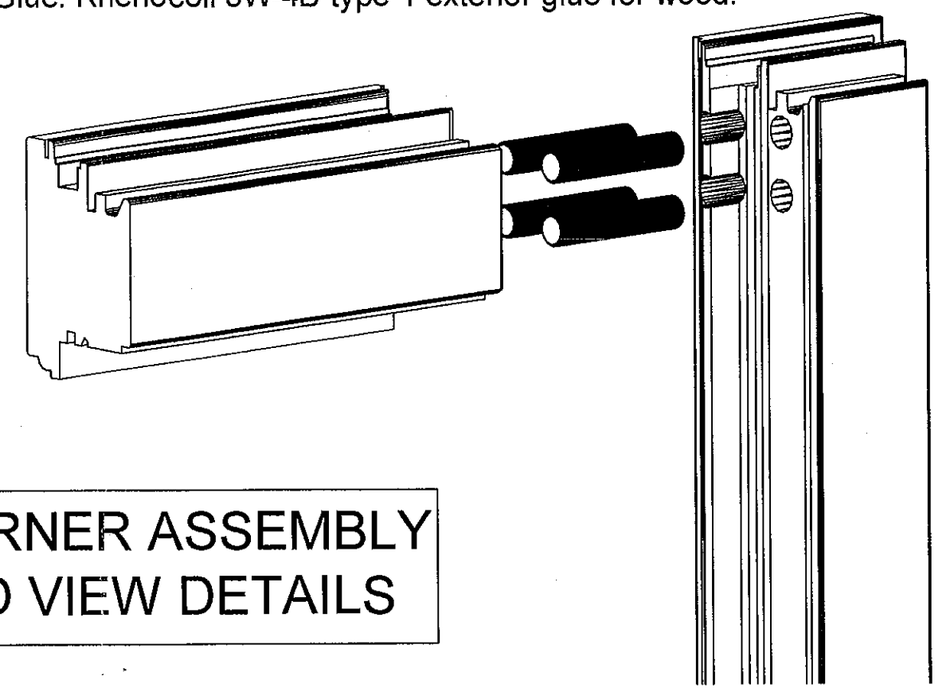

CORNER ASSEMBLY 3D VIEW DETAILS

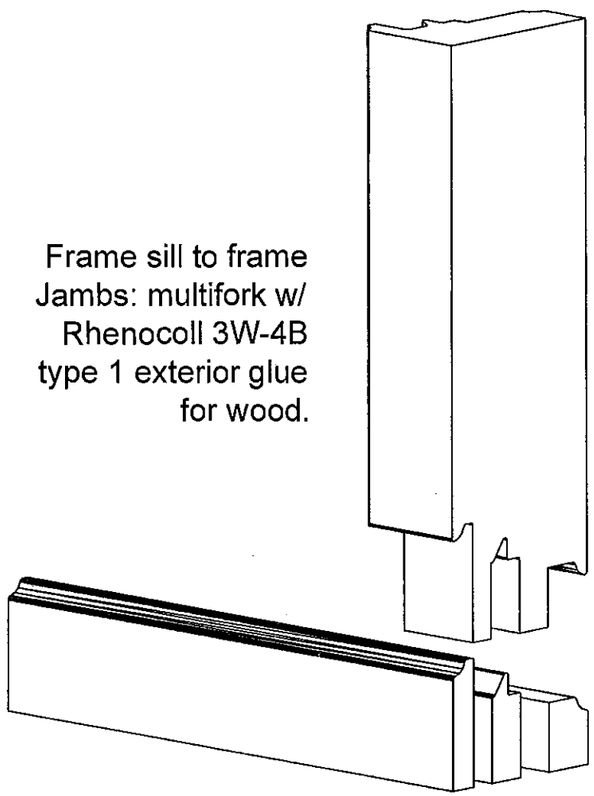

Frame sill to frame Jambs: multifork w/ Rhenocoll 3W-4B type 1 exterior glue for wood.

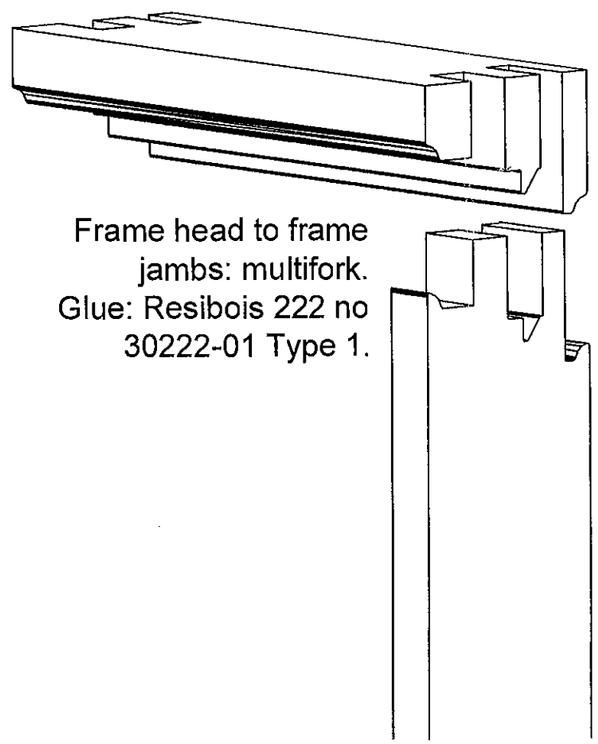

Frame head to frame jambs: multifork. Glue: Resibois 222 no 30222-01 Type 1.

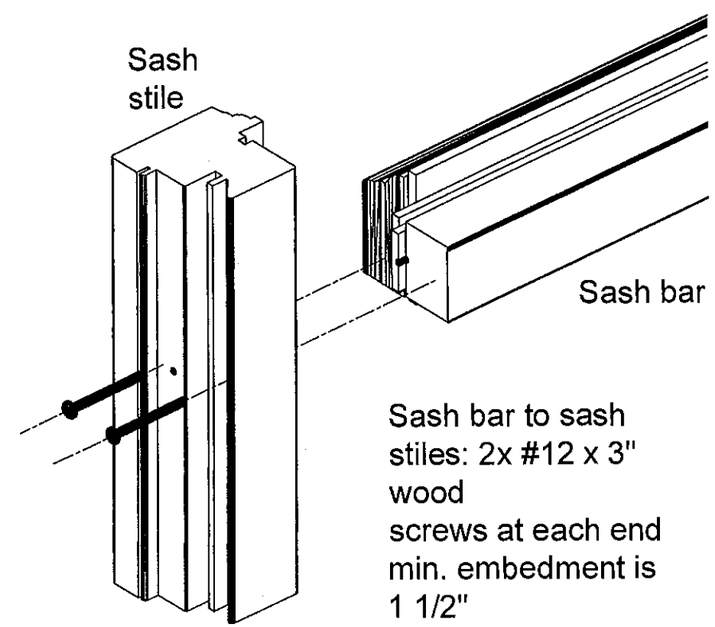

Sash bar to sash stiles: 2x #12 x 3" wood screws at each end min. embedment is 1 1/2"

MQ WINDOWS OF EUROPE AND THE AMERICAS
1855 GRIFFIN ROAD, SUITE A-271
DANIA, FL 33004

JS SERIE
OUTSWING
WOOD WINDOWS
MIAMI DADE COUNTY

Drawing no.: JS-3-OUT	
Scale: NONE	Drawn by: S. Marcotte
Date drawn: 01/10/99	Date revised: 01/17/11
File: JS-3-OUT	Page: 10/10

STRUCTURALLY REVIEWED BY:

SCOTT WOLTERS
FL PE# 62354
WOLTERS ENGINEERING, INC.
(COA# 27194)
1271 GRANT STREET
HOLLYWOOD, FL 33019
JAN 25 2011

PRODUCT RENEWED
as complying with the Florida Building Code
Acceptance No 10-1021.06
Expiration Date FEB 08, 2016
By Ishas L. Chand
Miami Dade Product Control