MIAMI-DADE COUNTY
BUILDING AND NEIGHBORHOOD COMPLIANCE DEPARTMENT (BNC)
BOARD AND CODE ADMINISTRATION DIVISION

MIAMI-DADE COUNTY
PRODUCT CONTROL SECTION
11805 SW 26 Street, Room 208
Miami, Florida 33175-2474
T (786) 315-2590 F (786) 315-2599
www.miamidade.gov/building/home/asp

NOTICE OF ACCEPTANCE (NOA)

Gensteel Doors Inc.
4950 Hickmore Street
Ville St. Laurent, Quebec, Canada H4T1K6

SCOPE:

This NOA is being issued under the applicable rules and regulations governing the use of construction materials. The documentation submitted has been reviewed by Miami-Dade County Product Control Section and accepted by the Board of Rules and Appeals (BORA) to be used in Miami Dade County and other areas where allowed by the Authority Having Jurisdiction (AHJ).

This NOA shall not be valid after the expiration date stated below. The Miami-Dade County Product Control Section (In Miami Dade County) and/or the AHJ (in areas other than Miami Dade County) reserve the right to have this product or material tested for quality assurance purposes. If this product or material fails to perform in the accepted manner, the manufacturer will incur the expense of such testing and the AHJ may immediately revoke, modify, or suspend the use of such product or material within their jurisdiction. BORA reserves the right to revoke this acceptance, if it is determined by Miami-Dade County Product Control Section that this product or material fails to meet the requirements of the applicable building code.

This product is approved as described herein, and has been designed to comply with the Florida Building Code, including the High Velocity Hurricane Zone.

DESCRIPTION: Series "GenStorm" Flush Outswing Steel Doors

APPROVAL DOCUMENT: Drawing No. **AD-09-001**, titled "Genstorm Opaque Outswing Steel Door System - LMI", sheet 1 through 8 of 8, dated 10-22-99 and last revised on Jan 04, 2011, prepared by MCY Engineering, Inc, signed and sealed by Yiping Wang, P.E., bearing the Miami-Dade County Product Control revision stamp with the Notice of Acceptance number and expiration date by the Miami-Dade County Product Control Section.

MISSILE IMPACT RATING: Large Missile Impact Resistant

Limitation: Max shim not to exceed ½" at head and ¾" at sill (high strength poured & hardened grout).

LABELING: Each unit shall bear one of the following permanent labels:

Gensteel Doors Inc.	Gensteel Doors Inc.	North American Doors Corp.
4950 Hickmore Street	2335 Industrial Park Drive	6 Industrial Blvd.
Ville St. Laurent, Quebec, Canada H4T1K6	Cornwall, Ontario, Canada K6H7M4	Plattsburgh, NY 12901-1911

and the statement: "Miami-Dade County Product Control Approved".

RENEWAL of this NOA shall be considered after a renewal application has been filed and there has been no change in the applicable building code negatively affecting the performance of this product.

TERMINATION of this NOA will occur after the expiration date or if there has been a revision or change in the materials, use, and/or manufacture of the product or process. Misuse of this NOA as an endorsement of any product, for sales, advertising or any other purposes shall automatically terminate this NOA. Failure to comply with any section of this NOA shall be cause for termination and removal of NOA.

ADVERTISEMENT: The NOA number preceded by the words Miami-Dade County, Florida, and followed by the expiration date may be displayed in advertising literature. If any portion of the NOA is displayed, then it shall be done in its entirety.

INSPECTION: A copy of this entire NOA shall be provided to the user by the manufacturer or its distributors and shall be available for inspection at the job site at the request of the Building Official.

This NOA **revises NOA # 10-0125.01** and consists of this page 1 and evidence pages E-1, as well as approval document mentioned above.

The submitted documentation was reviewed by **Ishaq I. Chanda, P.E.**

MIAMI-DADE COUNTY APPROVED

1/18/11

NOTICE OF ACCEPTANCE: EVIDENCE SUBMITTED

A. DRAWINGS (transferred from file # **10-0125.01)**

1. Manufacturer's die drawings and sections.
2. Drawing No. **AD-09-001**, titled "Genstorm Opaque Outswing Steel Door System - LMI", sheet 1 through 8 of 8, dated 10-22-99 and last revised on Jan 04, 2011, prepared by MCY Engineering, Inc, signed and sealed by Yiping Wang, P.E.

B. TESTS

1. Test reports on 1) Uniform Static Air Pressure Test, Loading per FBC, TAS 202-94
   2)Water Resistance Test, per FBC, TAS 202-94 (PMK 2005-AT)

Along with marked-up drawings and installation diagram of Genstorm Opaque Double Swinging Doors, prepared by Fenestration Testing Laboratory, Inc., Test Report No. **FTL 6346**, dated 10/14/10, signed and sealed by Jorge A. Causo, P.E.

2. Test reports on 1) Air Infiltration Test, per FBC, TAS 202-94
   2) Uniform Static Air Pressure Test, Loading per FBC, TAS 202-94
   3) Water Resistance Test, per FBC, TAS 202-94(PMK177T threshold)
   4) Large Missile Impact Test per FBC, TAS 201-94
   5) Cyclic Wind Pressure Loading per FBC, TAS 203-94
   6) Forced Entry Test, per FBC 2411 3.2.1 and TAS 202-94

Along with marked-up drawings and installation diagram of Genstorm Opaque, Glazed and Louvered Single and Double Swinging Doors, prepared by Fenestration Testing Laboratory, Inc., Test Report No. **FTL 5877**, dated 10/13/09 and **FTL 5898**, dated 09/14/09, both signed and sealed by Julio E. Gonzalez, P.E. (transferred from file # **10-0125.01)**

3. Additional Test reports per FBC TAS 201, 202 and 203-94, test report No. **ITS-3058370-DOUBLE,** dated 12/09/04 for Double Outswing Honeycomb Steel Door System, prepared by Intertek Testing Services, signed and sealed by Stephen J. Emerman, P. E. ***"Submitted under NOA # 05-0127.11"***

C. CALCULATIONS

1. Anchor verification calculations and structural analysis, complying with FBC-2007, prepared by MCY Engineering, Inc, dated 01/06/10, signed and sealed by Yiping Wang, P.E. (transferred from file # **10-0125.01)**

D. QUALITY ASSURANCE

1. Miami Dade Building and Neighborhood Compliance Department (BNC).

E. MATERIAL CERTIFICATIONS

1. Tensile Test report No. **5877(FTL08187)** Sp #A-1 dated 10/13/09 per ASTM A-370-05 for steel face sheet, prepared by Fenestration Testing laboratory, signed and sealed by Julio E. Gonzalez, P.E.

F. STATEMENTS

1. Statement letter of conformance and letter of no financial interest dated 01/18/11, prepared by MCY Engineering, Inc, signed and sealed by Yiping Wang, P.E.
2. Addendum letter dated 12/20/10 issued by FTL, signed & sealed by Jorge Causo, P.E.

G. OTHER

1. This NOA **revises** NOA # **10-0125.01**, expired on July 14, 2015.
2. Test proposals # **08-1489** and e-mail 10/04/10 approved by BCCO.
3. Distribution agreement between GenSteel Door, Canada & North American Door Corp, N.Y. dtd 10/22/10, signed by Bruno Gervasi and Antonio Gervasi, respectively.

Ishaq I. Chanda

Ishaq I. Chanda, P.E.
Product Control Examiner
NOA No 10-1021.07
Expiration Date: July 14, 2015
Approval Date: February 10, 2011

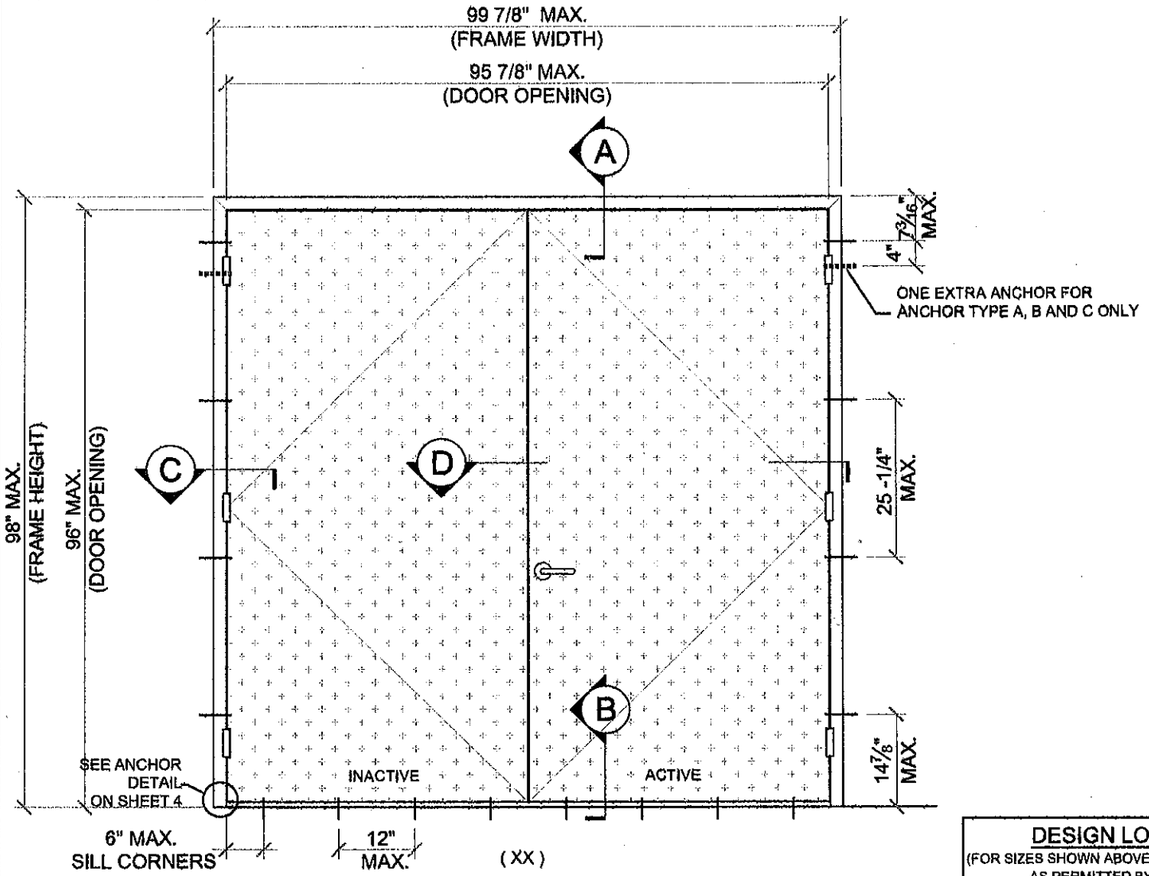

DOUBLE DOOR TYP. ELEVATION

DESIGN LOAD
(FOR SIZES SHOWN ABOVE OR SMALLER)
AS PERMITTED BY FBC
+65.0 PSF
-65.0 PSF

1

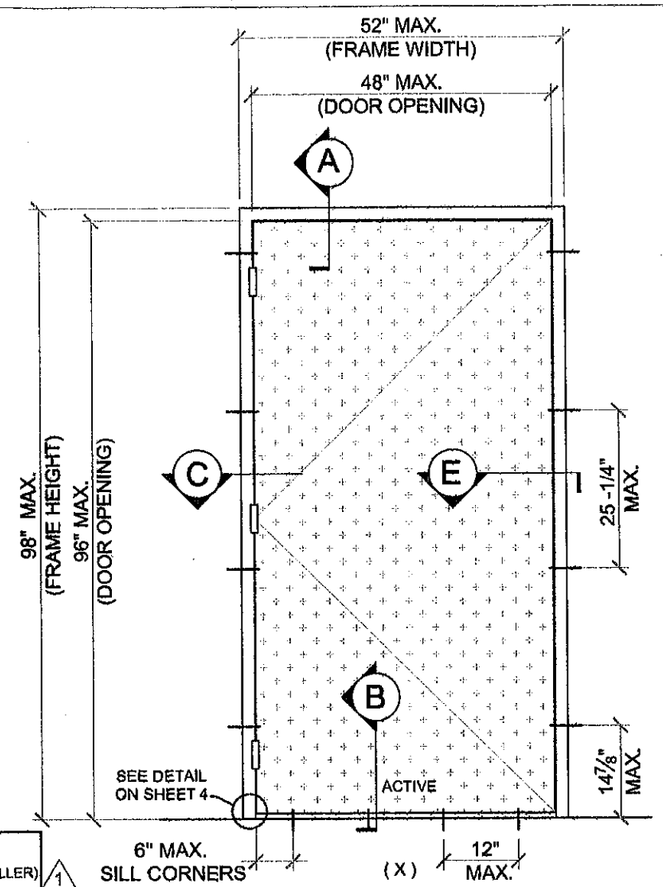

SINGLE DOOR TYP. ELEVATION

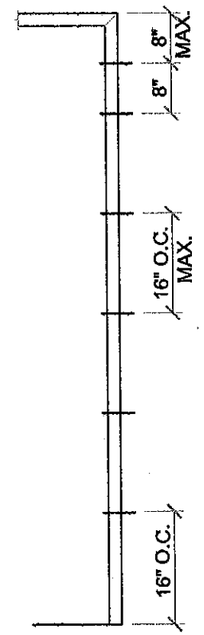

WIRE ANCHOR LAYOUT

SERIES GENSTORM OPAQUE OUTSWING STEEL DOOR (LMI)

- THIS PRODUCT HAS BEEN DESIGNED AND TESTED TO COMPLY WITH THE REQUIREMENTS OF THE FLORIDA BUILDING CODE 2007 EDITION INCLUDING HIGH VELOCITY HURRICANE ZONE (HVHZ).
- DOORS RATED FOR LARGE MISSILE IMPACT AND DO NOT REQUIRE SHUTTERS.
- DOORS APPROVED FOR INSTALLATIONS WHERE WATER INFILTRATION RESISTANCE IS OR IS NOT REQUIRED. (SINGLE ROW SELF ADHESIVE CLOSED CELL FOAM TAPE TO BE APPLIED ENTIRE PERIMETER OF FRAME).
- ANCHORS SHALL BE AS LISTED, SPACED AS SHOWN ON DETAILS. ANCHORS EMBEDMENT TO BASE MATERIAL SHALL BE BEYOND WALL DRESSING OR STUCCO.
- ANCHORING OR LOADING CONDITIONS NOT SHOWN IN THESE DETAILS ARE NOT PART OF THIS APPROVAL.
- MATERIALS INCLUDING BUT NOT LIMITED TO STEEL/METAL SCREWS THAT COME INTO CONTACT WITH OTHER DISSIMILAR MATERIALS SHALL MEET THE REQUIREMENTS.
- METAL STRUCTURES NOT BY GENSTEEL DOOR CO. MUST SUPPORT LOADS IMPOSED BY DOOR SYSTEM AND TRANSFER THEM TO THE BUILDING STRUCTURE.

- WOOD BUCKS BY OTHERS MUST BE ANCHORED PROPERLY TO TRANSFER LOADS TO THE STRUCTURE.
- A LOAD DURATION FACTOR IN ALLOWABLE STRESS IS USED IN DESIGN OF ANCHORS INTO WOOD ONLY.
- DOOR PANEL: MIN. 20 GA. STEEL MIN. Fy = 42 KSI MIN.
  DOOR FRAME: MIN. 18 GA. STEEL MIN. Fy = 42 KSI MIN
- DOOR PANEL STAINLESS OPTION: 20 GA STAINLESS STEEL DOOR PANEL MEETING MIN. Fy = 42 ksi OR BETTER MAY QUALIFY HAVING "MIL-CERTIFICATE" AS A VERIFICATION OF THE AVAILABLE MIN. YIELD STRENGTH.
- DOOR PANEL STAINLESS OPTION: 20 GA STAINLESS STEEL DOOR PANEL MEETING MIN Fy = 42 ksi OR BETTER MAY QUALIFY HAVING "MIL-CERTIFICATE" AS A VERIFICATION OF THE AVAILABLE MIN. YIELD STRENGTH.

NOTES:
EGRESS REQUIREMENTS TO BE REVIEWED BY BUILDING OFFICIAL.

OPTIONAL EMBOSSED DOOR LEAF PATTERNS:

1

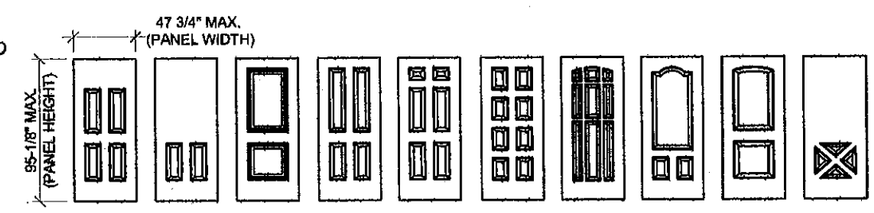

PRODUCT REVISED
as complying with the Florida Building Code
Acceptance No. 10-1021.07
Expiration Date July 14, 2015
By Ishan L. Chanda
Miami Dade Product Control

MIAMI DADE COUNTY

YIPING WANG, P.E.
FLORIDA REGISTRATION
PE #55983
C.A.N. 28677

JAN 04 2011

REVISIONS			
NO	DATE	DESCRIPTION	
1	7/10/10	BCCO COMMENTS	
2	1/4/11	BCCO COMMENTS	

MCY ENGINEERING, INC.
GLAZING CONSULTANTS
9110 SW SUNSET DRIVE. MIAMI, FL 33173
P: 305.271.0117
F: 786.573.5063
www.MCYEngineering.com MCY.Engineering@Att.net

GENSTORM OPAQUE OUTSWING STEEL DOOR SYSTEM (LMI)

genteel doors
www.genteeldoors.com
4950 Hickmore, St. Laurent, Quebec, Canada, H4T1K6
Tel: (514) 733-3562 Fax: (514) 733-1932

DATE	10-22-99
SCALE	NTS.
DRAWN	M.G
PROJECT	09-015

DRAWING NO.
AD-09-001

SHEET 1 OF 8

HEAD DETAIL (A)

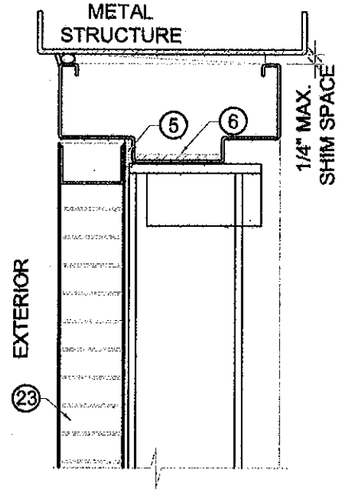

HEAD DETAIL (A)

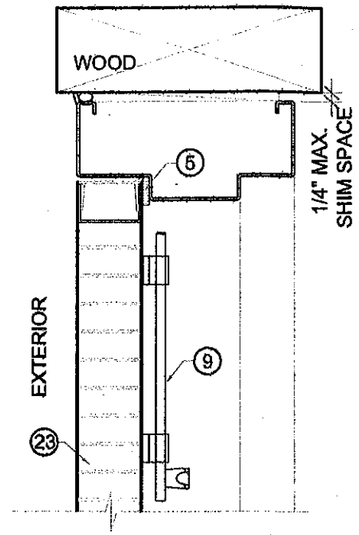

HEAD DETAIL (A)

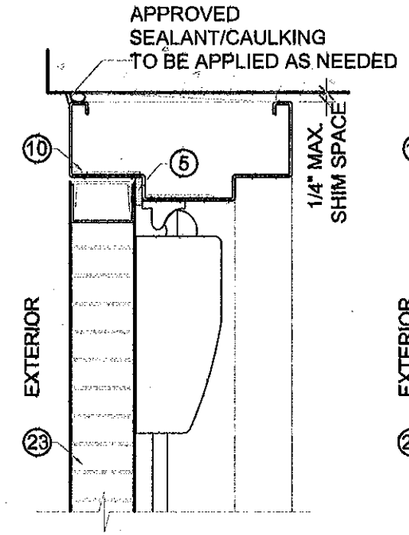

HEAD DETAIL (A)

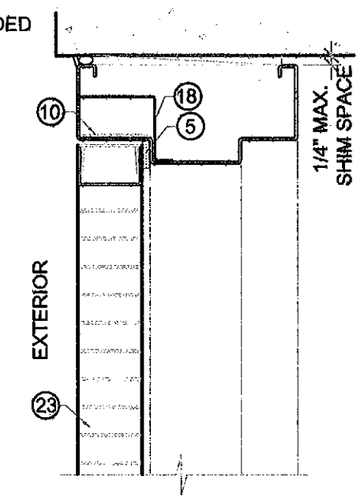

HEAD DETAIL (A)

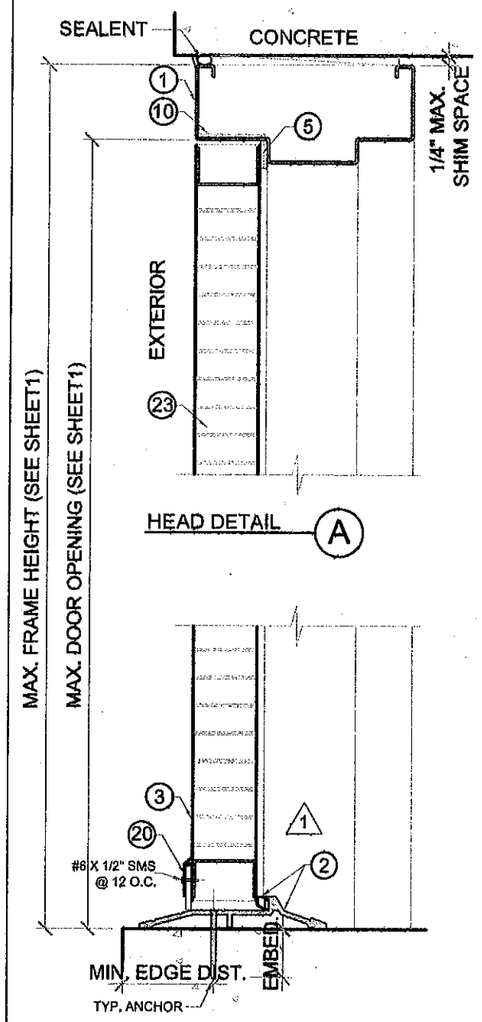

TYPICAL THRESHOLD (B)
APPR'D FOR WATER RESISTANCE

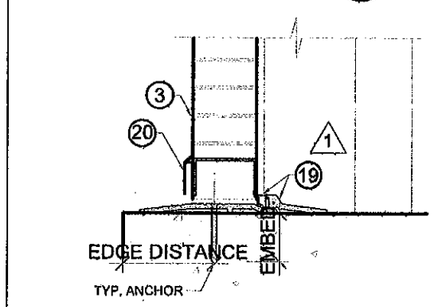

TYPICAL THRESHOLD (B1)
APPR'D FOR WATER RESISTANCE

TYPICAL ANCHORS @ JAMB:

TYPE A. 5/16" DIA. ULTRACONS BY 'ELCO' Fy=155 KSI Fu = 177 KSI
DIRECTLY INTO 2BY WOOD BUCK
DIRECTLY INTO fc'=3000 PSI CONCRETE
1-1/2" MIN. EMBED
2-1/2" MIN. EDGE DISTANCE

TYPE B. 3/8" DIA. HLC SLEEVE ANCHOR BY 'HILTI'
DIRECTLY INTO fc'=3000 PSI CONCRETE, 3" MIN. EDGE DIST.
DIRECTLY INTO fc'=2000 PSI CONCRETE BLOCK, 3-1/2" MIN. EDGE DIST.
1-1/4" MIN. EMBED

TYPE C. 3/8" DIA. SLEEVE ANCHOR BY 'WEJ-IT'
DIRECTLY INTO fc'=4000 PSI CONCRETE, 2-3/8" MIN. EMBED
DIRECTLY INTO fc'=2000 PSI CONCRETE BLOCK, 1-1/4" MIN. EMBED
3-1/2" MIN. EDGE DISTANCE

TYPE D. 3/8" DIA. POWER BOLT BY 'POWERS'
DIRECTLY INTO fc'=3000 PSI CONCRETE
2-1/2" MIN. EMBED
3" MIN. EDGE DISTANCE

TYPE E. 5/16" DIA. SMS OR MACHINE BOLTS (MIN. GRADE 2 CRS) OR STST
INTO METAL STRUCTURES (STEEL OR ALUMINUM 1/8" MIN. THICK.)
STEEL : Fy = 36 KSI MIN.
ALUMINUM : 6063-T6 MIN.
(STEEL IN CONTACT WITH ALUMINUM TO BE PLATED OR PAINTED)

TYPE G. WIRE ANCHOR (Fy = 60 ksi.) MIN. 10" LONG
0.173 DIA. STEEL WIRE ANCHORS EMBED INTO CONCRETE BLOCK

TYPICAL ANCHORS @ THRESHOLD:

TYPE F. 1/4" OR 5/16" DIA. ULTRACONS BY 'ELCO' Fy = 155 KSI Fu = 177 KSI
DIRECTLY INTO fc'=3000 PSI MIN. CONCRETE
1-1/2" MIN. EMBED
2-1/2" MIN. EDGE DISTANCE

1/4" TAPCON BY ITW Fy = 90 KSI Fu = 120 KSI
DIRECTLY INTO fc'=3000 PSI MIN. CONCRETE
1-1/2" MIN. EMBED
2-1/2" MIN. EDGE DISTANCE

SEALANT:
ALL FRAME JOINTS AND CORNERS TO BE SEALED WITH SILICONE AT PERIMETER

PRODUCT REVISED
as complying with the Florida Building Code
Acceptance No. 10-1021.07
Expiration Date July 14, 2015
By Ishay I. Chenda
Miami Dade Product Control
MIAMI DADE COUNTY

YIPING WANG, P.E.
FLORIDA REGISTRATION
PE #55983
C.A.N. 28677

JAN 04 2011

REVISIONS

NO.	DATE	DESCRIPTION
1	7/10/10	BCCO COMMENTS
2	1/4/11	BCCO COMMENTS

MCY ENGINEERING, INC.
GLAZING CONSULTANTS
9110 SW SUNSET DRIVE. MIAMI, FL 33173
P: 305.271.0117
F: 786.573.5063
www.MCYEngineering.com MCY.Engineering@att.net

GENSTORM OPAQUE OUTSWING STEEL DOOR SYSTEM (LMI)

genstel doors
www.genstelldoors.com
4950 Hickmore, St. Laurent, Quebec, Canada, H4T1K6
Tel: (514) 733-3562 Fax: (514) 733-1932

DATE	10-22-99
SCALE	NTS.
DRAWN	M.G
PROJECT	09-015

DRAWING NO.
AD-09-001

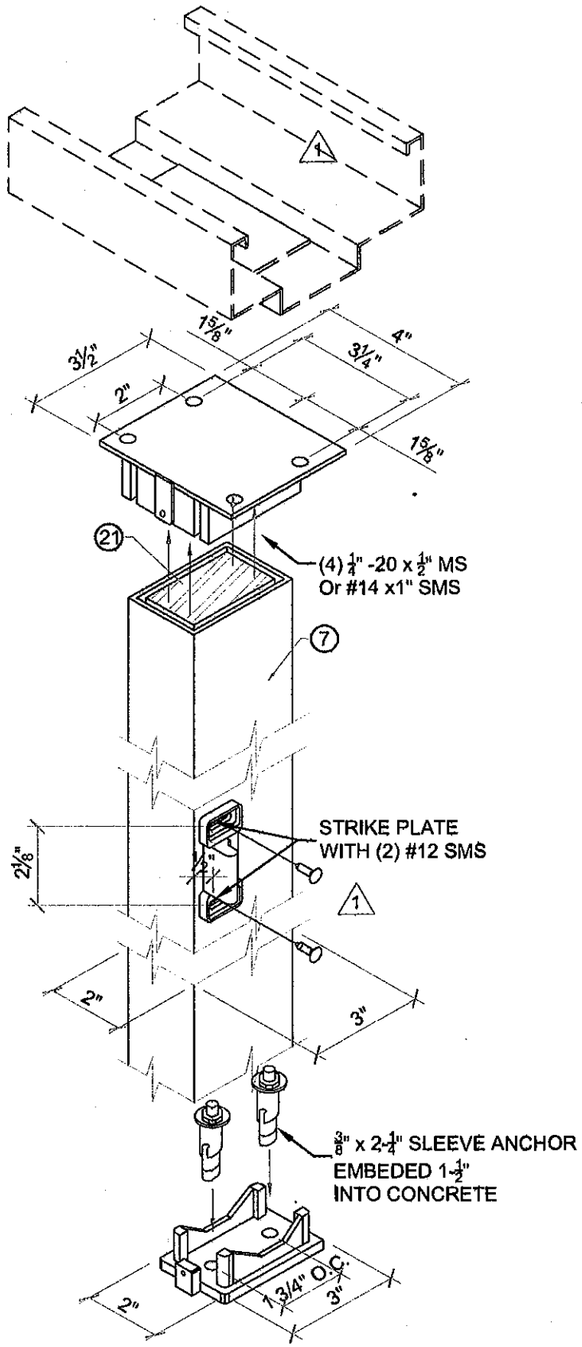

HC822
REMOVABLE MULLION
W/REINFORCEMENT

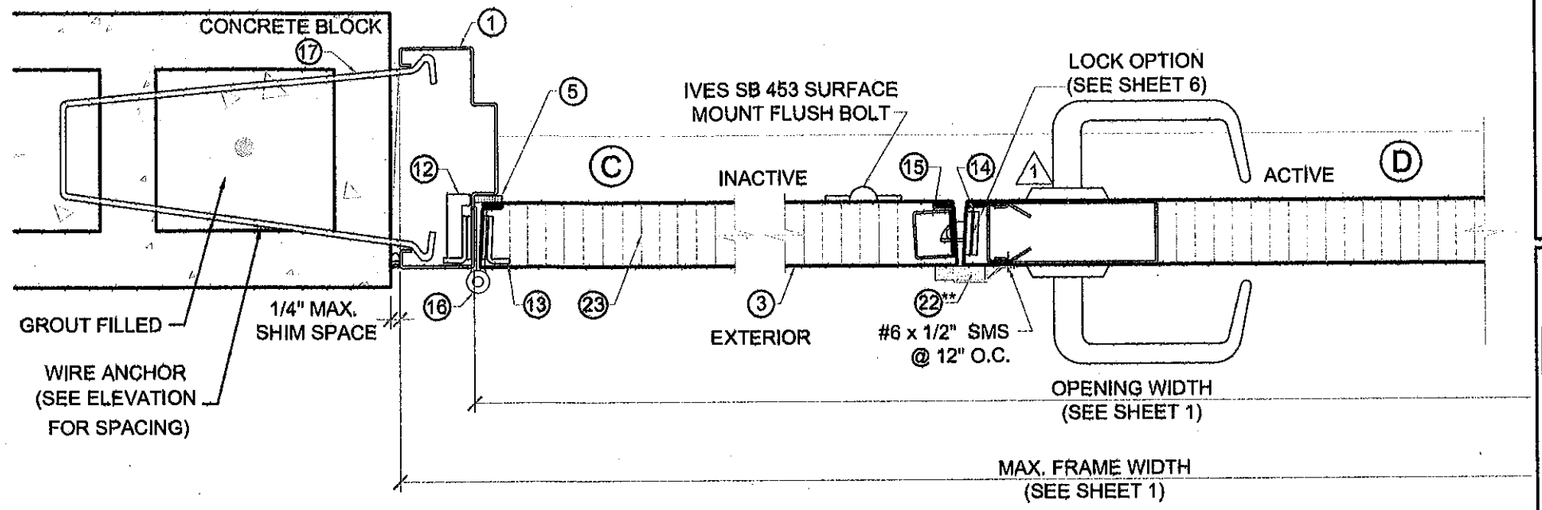

LOCK OPTION # 1
SERIES 8200 SARGENT MORTISE LOCK W/ SURFACE BOLTS (INACTIVE)

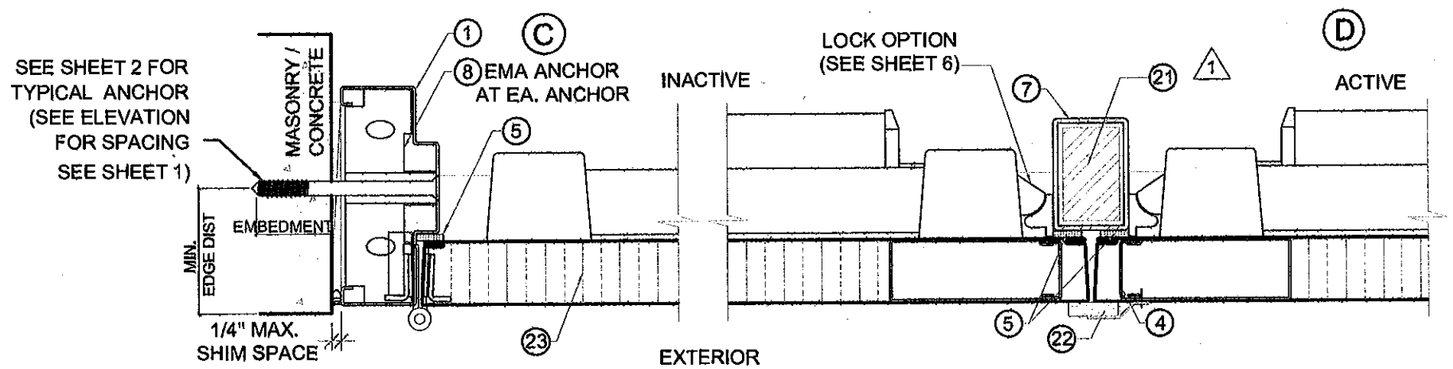

LOCK OPTION # 2
PRECISION HC2100 RIM PANIC EXIT W/ HC822 REINFORCE MULLION

** 22 PEMKO 375 ASTRAGAL W/ SPONGE
NEOPRENE NOT REQUIRED, IF WATER
INFILTRATION NOT NEEDED

PRODUCT REVISED
as supplying with the Florida
Building Code
Acceptance No. 10-1021.07
Expiration Date July 14, 2015
By Ishay I. Chaude
Miami Dade Product Control

MIAMI DADE COUNTY

YIPING WANG, P.E.
FLORIDA REGISTRATION
PE #55983
C.A.N. 28677

JAN 04 2011

REVISIONS

NO.	DATE	DESCRIPTION
1	7/10/10	BCCO COMMENTS
2	1/4/11	BCCO COMMENTS

MCY ENGINEERING, INC.
GLAZING CONSULTANTS
9110 SW SUNSET DRIVE. P: 305.271.0117
MIAMI, FL 33173 F: 786.573.5063
www.MCYEngineering.comMCY.Engineering@Att.net

GENSTORM OPAQUE OUTSWING STEEL DOOR SYSTEM (LMI)

gensteel doors
www.gensteeldoors.com
4950 Hickmore, St. Laurent, Quebec, Canada, H4T1K6
Tel: (514) 733-3562 Fax: (514) 733-1932

DATE	10-22-99
SCALE	NTS.
DRAWN	M.G
PROJECT	09-015

DRAWING NO.
AD-09-001

SHEET 3 OF 8

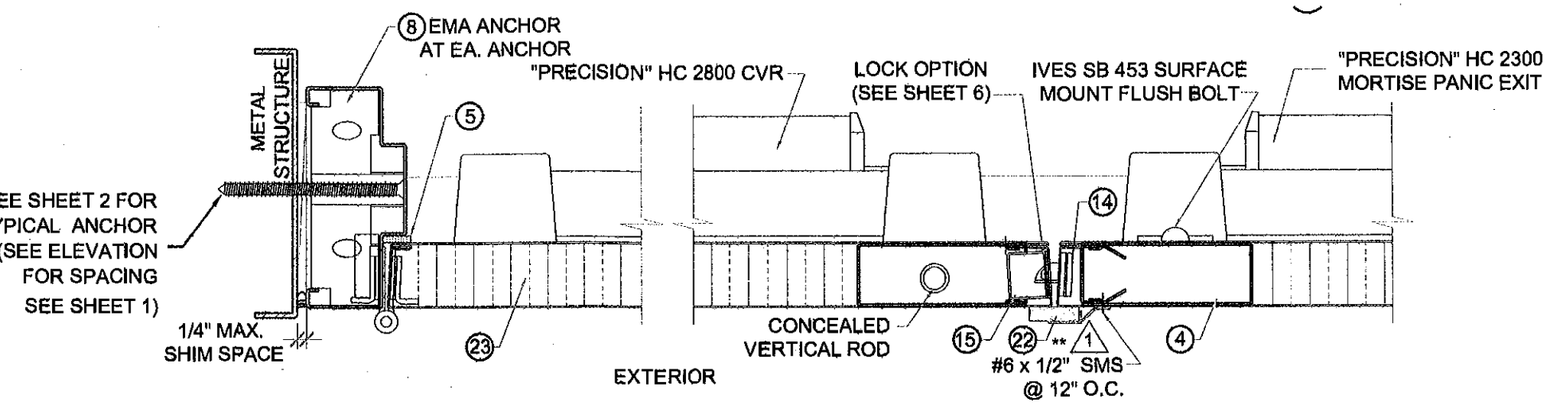

LOCK OPTION # 3

"PRECISION" HC 2800 PANIC DEVICE W/CONCEALED VERTICAL ROD(INACTIVE) / "PRECISION" HC2300 MORTISE PANIC EXIT(ACTIVE)

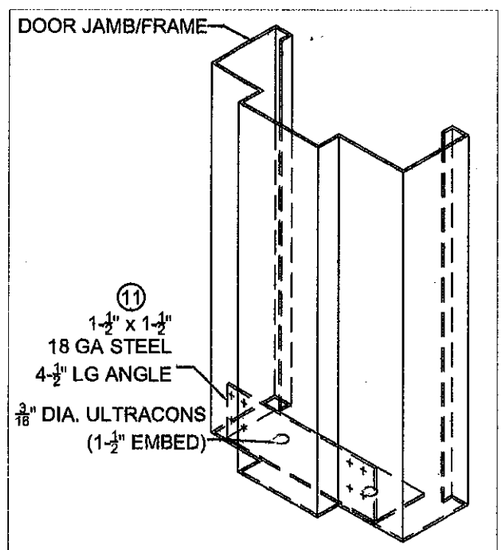

BOTTOM CORNER ANCHOR DETAIL

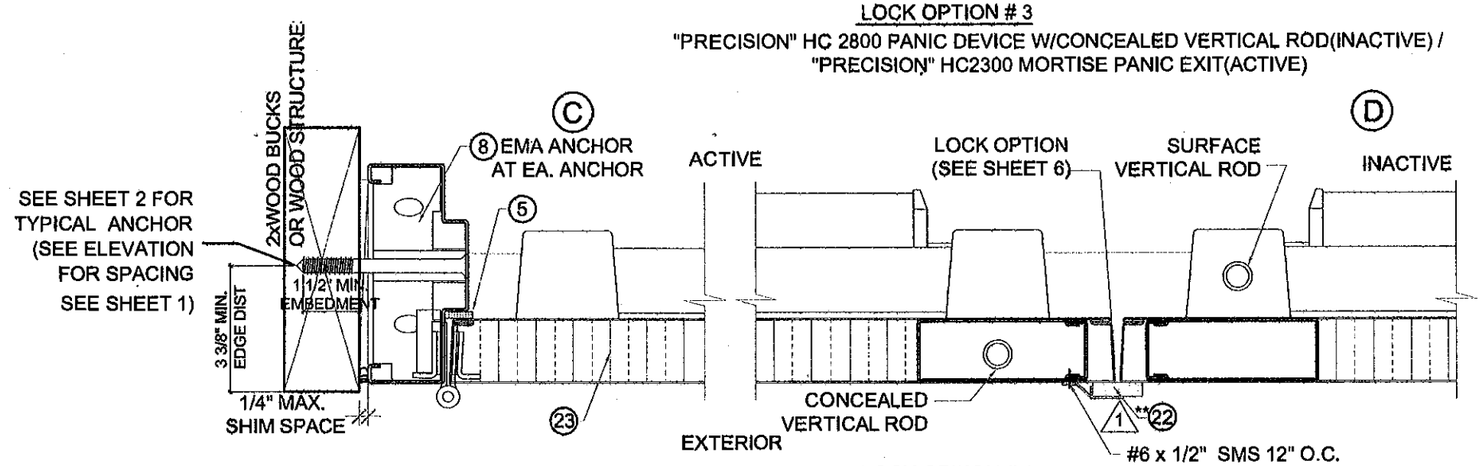

LOCK OPTION # 4

"PRECISION" HC 2800 PANIC DEVICE W/CONCEALED VERTICAL ROD / "PRECISION" HC2200 PANIC DEVICE W/ SURFACE VERTICAL ROD

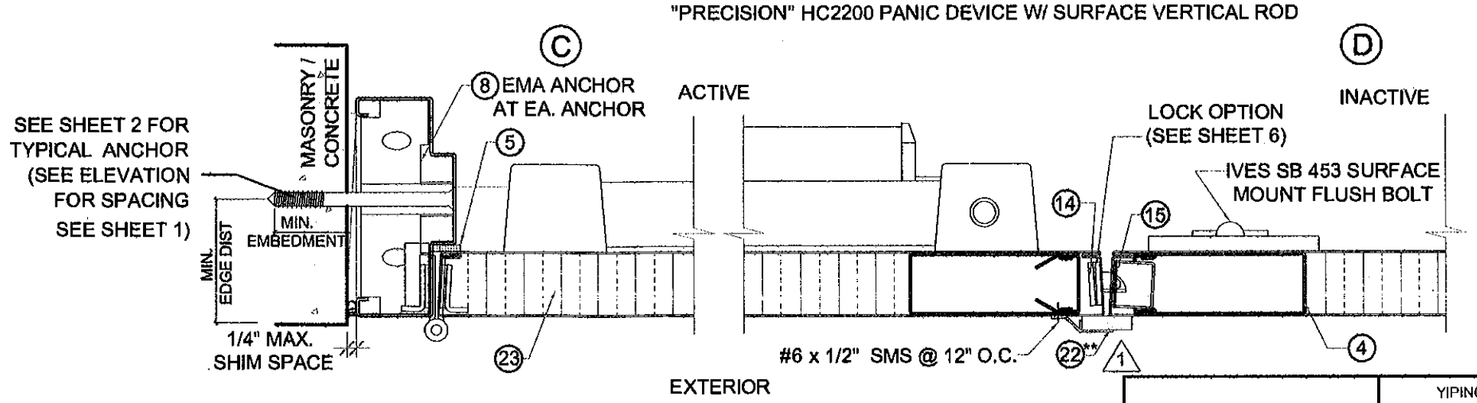

LOCK OPTION # 5

"PRECISION" HC2200 PANIC DEVICE W/ SURFACE VERTICAL ROD (ACTIVE) / "IVES" SB453 SURFACE BOLTS(INACTIVE)

** 22 PEMKO 375 ASTRAGAL W/ SPONGE NEOPRENE NOT REQUIRED, IF WATER INFILTRATION NOT NEEDED

PRODUCT REVISED
as complying with the Florida Building Code
Acceptance No. 10-1021.07
Expiration Date July 14, 2015
By Ishaq I. Chanda
Miami Dade Product Control

MIAMI DADE COUNTY

YIPING WANG, P.E.
FLORIDA REGISTRATION
PE #55983
C.A.N. 28677

JAN 04 2011

REVISIONS			
NO.	DATE	DESCRIPTION	
1	7/10/10	BCCO COMMENTS	
2	1/4/11	BCCO COMMENTS	

MCY ENGINEERING, INC.
GLAZING CONSULTANTS
9110 SW SUNSET DRIVE. MIAMI, FL 33173
P: 305.271.0117
F: 786.573.5063
www.MCYEngineering.com/MCY.Engineering@Att.net

GENSTORM OPAQUE OUTSWING STEEL DOOR SYSTEM (LMI)

gensteel doors
www.gensteeldoors.com
4950 Hickmore, St. Laurent, Quebec, Canada, H4T1K6
Tel: (514) 733-3562 Fax: (514) 733-1932

DATE	10-22-09
SCALE	NTS.
DRAWN	M.G
PROJECT	09-015

DRAWING NO.
AD-09-001

SHEET 4 OF 8

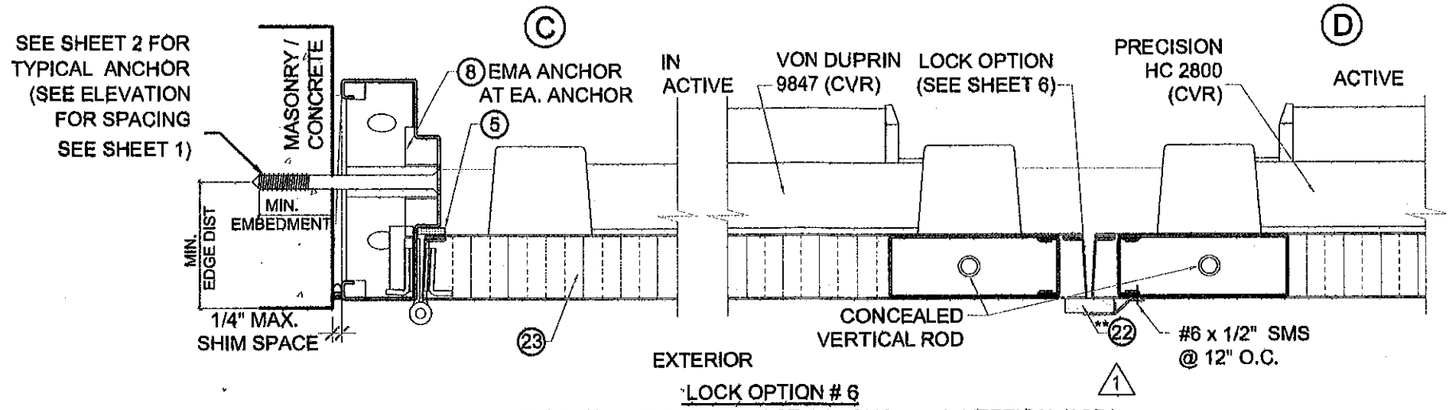

LOCK OPTION # 6
"VON DUPRIN" 9847 PANIC DEVICE W/ CONCEALED VERTICAL ROD/
"PRECISION" HC2800 PANIC DEVICE W/ CONCEALED VERTICAL ROD

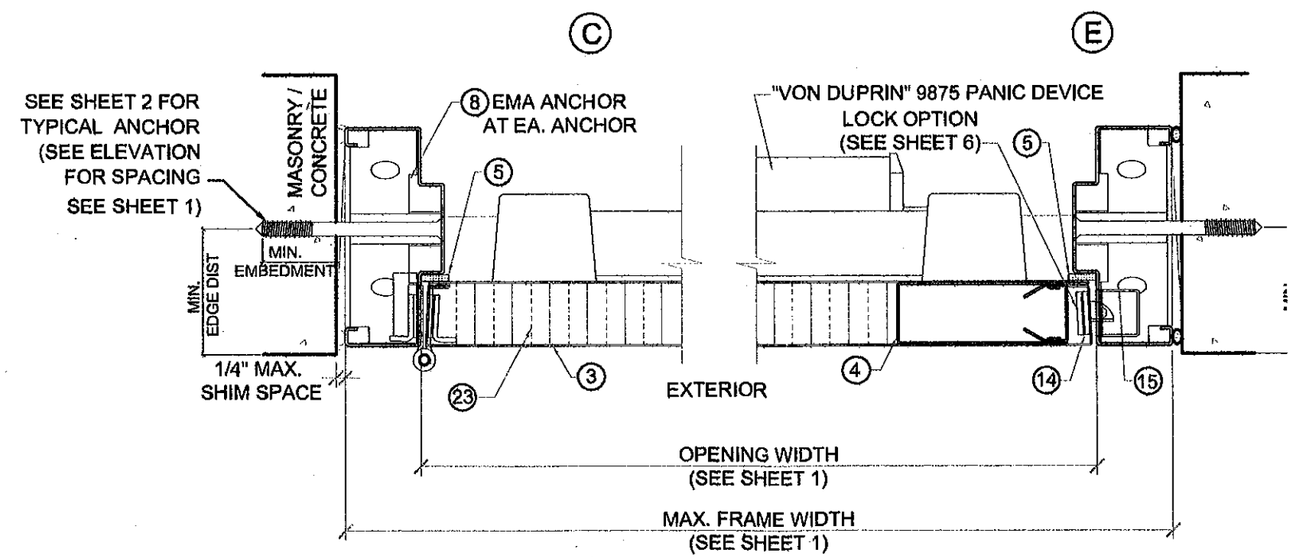

SINGLE LEAF LOCK OPTION # 7
"VON DUPRIN" 9875 MORTISE PANIC EXIT DEVICE)

** 22 PEMKO 375 ASTRAGAL W/ SPONGE NEOPRENE NOT REQUIRED, IF WATER INFILTRATION NOT NEEDED

PRODUCT REVISED
as complying with the Florida Building Code
Acceptance No. 10-1021.07
Expiration Date July 14, 2015
By Sheng I. Chang
Miami Dade Product Control

MIAMI DADE COUNTY

YIPING WANG, P.E.
FLORIDA REGISTRATION
PE #55983
C.A.N. 28677

JAN 04 2011

REVISIONS

NO.	DATE	DESCRIPTION
1	7/10/10	BCCO COMMENTS
2	1/4/11	BCCO COMMENTS

MCY ENGINEERING, INC.
GLAZING CONSULTANTS
9110 SW SUNSET DRIVE. P: 305.271.0117
MIAMI, FL 33173 F: 786.573.5063
www.MCYEngineering.com MCY.Engineering@Att.net

GENSTORM OPAQUE OUTSWING STEEL DOOR SYSTEM (LMI)

genteel doors
www.genteeldoors.com
4950 Hickmore, St. Laurent, Quebec, Canada, H4T1K6
Tel: (514) 733-3562 Fax: (514) 733-1932

DATE	10-22-99
SCALE	NTS.
DRAWN	M.G
PROJECT	09-015

DRAWING NO.
AD-09-001

SHEET 5 OF 8

LOCK OPTIONS

LOCK OPTIONS FOR DOUBLE DOORS
ACTIVE PANELS CAN APPLY TO SINGLE DOORS

HINGES: STEEL MORTISE HINGES 3 PER LEAF. LOCATED AT 9-$\frac{5}{8}$" MAX. FROM TOP OF DOOR TO CENTER LINE OF 1ST HINGE. BALANCE TO BE SPACED OUT NOT TO EXCEED 37-15/16" MAX. FROM CL TO CL OF HINGE. TO BE FASTENED BY #12-24 x $\frac{1}{2}$" FLATHEAD MACHINE SCREWS.

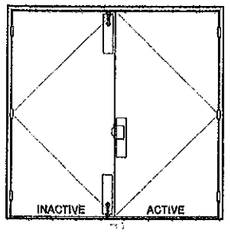

OPTION 1

ACTIVE LEAF:
"SARGENT" 8200 SURFACE MOUNT MORTISE LOCK WITH HANDLE. WITH SURFACE MOUNT METALLIC DEAD-BOLT. LOCATED 38" FROM BOTTOM WITH (2) 8-32 x $\frac{1}{4}$" FH MS

INACTIVE LEAF:
6-3/4" LONG 18 GA STRIKE BOX TO BE FASTENED BY (2)#12-24 SCREWS
"IVES" SB453 SURFACE MOUNT MANUALLY OPERATED FLUSH BOLT AT TOP AND BOTTOM. WITH (4) 1/4-20 x1-3/8" FH MS

SURFACE MOUNT METALLIC STRIKE PLATE AT FRAME HEAD TO BE FASTENED WITH (2) #10 x 1-1/4" FH SMS

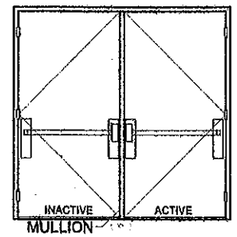

OPTION 2

(PRECISION RIM EXIT W. MULLION)

ACTIVE LEAF:
"PRECISION" HC2100 RIM EXIT PANIC DEVICE. SURFACE MOUNT LOCATED 41-3/4" FROM BOTTOM WITH BY (4) 10-20 x 1-1/4" OH MS

INACTIVE LEAF:
"PRECISION" HC2100 RIM EXIT PANIC DEVICE. SURFACE MOUNT LOCATED 41-3/4" FROM BOTTOM WITH BY (4) 1/4-20 x 1" FH MS REINFORCED

REINFORCED MULLION:
HC822 PRECISION HARDWARE REMOVABLE WITH (4) $\frac{1}{4}$" 20 x $\frac{1}{2}$" MS OR #14 x 1" SMS AT TOP. $\frac{3}{8}$" x 2-$\frac{1}{4}$" SLEEVE ANCHOR EMBEDDED 1-$\frac{1}{2}$" INTO CONCRETE AT BOTTOM.

DOOR EDGE CONSTRUCTION

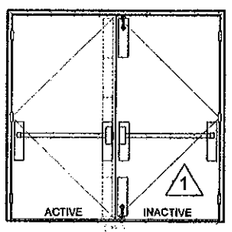

OPTION 3

ACTIVE LEAF:
"PRECISION" HC2300 MORTISE PANIC EXIT. SURFACE MOUNT MANUALLY OPERATED FLUSH BOLT AT TOP AND BOTTOM. WITH (4) 10 x 1-1/4" FH SMS

INACTIVE LEAF:
"PRECISION" HC2800 CONCEALED VERTICAL ROD TWO POINT LOCK SYSTEM WITH "PRECISION" PANIC DEVICE LOCATED 40" FROM BOTTOM WITH (4) 10-24 x 1-1/4" OH MS

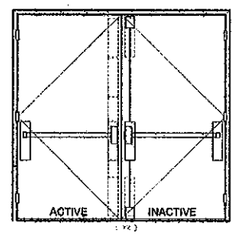

OPTION 4

ACTIVE LEAF:
"PRECISION" HC2800 CONCEALED VERTICAL ROD TWO POINT LOCK SYSTEM WITH PRECISION PANIC DEVICE WITH (4) 10-24 x 1-1/4". LOCATED 39-1/2" FROM BOTTOM

INACTIVE LEAF:
"PRECISION" HC2200 SURFACE VERTICAL ROD TWO POINT LOCK SYSTEM WITH PRECISION PANIC DEVICE WITH (4) 10-24 x 1-1/4" OH MS. LOCATED 39-1/2" FROM BOTTOM

(2)-SURFACE MOUNT METALLIC STRIKE PLATE AT HEAD TO BE FASTENED WITH (2) 1/4-20 FH MS

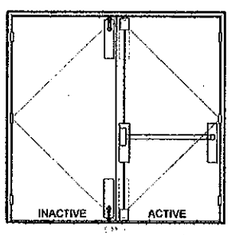

OPTION 5

ACTIVE LEAF:
"PRECISION" HC2200 SURFACE VERTICAL ROD.
(4) 10-24 x 1-1/4" OH MS. LOCATED 39-3/4" FROM BOTTOM

INACTIVE LEAF:
"IVES" SB453 SURFACE MOUNT MANUALLY OPERATED FLUSH BOLT. TO BE FASTENED WITH (4) 12 x 1-1/4" FH MS

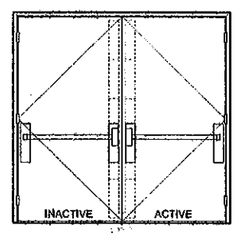

OPTION 6

ACTIVE LEAF:
"VON DUPRIN" 9847 CONCEALED VERTICAL ROD WITH PANIC DEVICE WITH (2) 8-32 x 3/8" FH MS. LOCATED 39-3/4" FROM BOTTOM

INACTIVE LEAF:
"PRECISION" HC2800 CONCEALED VERTICAL ROD. SURFACE MOUNT TWO POINT LOCK SYSTEM WITH PANIC DEVICE WITH (4) 10-24 x 1-1/4". LOCATED 39-1/2" FROM BOTTOM

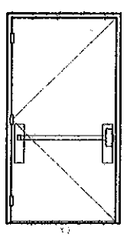

OPTION 7

SINGLE PANEL DOOR ONLY:
"VON DUPRIN" 9875 MORTISE PANIC EXIT WITH (2) 8-32 x 3/8" FH MS.
LOCATED 39-3/4" FROM BOTTOM

PRODUCT REVISED
as complying with the Florida Building Code
Acceptance No. 10-1021.07
Expiration Date July 24, 2015
By Ishaq I. Chanda
Miami Dade Product Control

MIAMI DADE COUNTY

YIPING WANG, P.E.
FLORIDA REGISTRATION
PE #55983
C.A.N. 28677

JAN 04 2011

REVISIONS

NO.	DATE	DESCRIPTION
1	7/10/10	BCCO COMMENTS
2	1/4/11	BCCO COMMENTS

MCY ENGINEERING, INC.
GLAZING CONSULTANTS
9110 SW SUNSET DRIVE. MIAMI, FL. 33173
P: 305.271.0117
F: 786.573.5063
www.MCYEngineering.com MCY.Engineering@Att.net

GENSTORM OPAQUE OUTSWING STEEL DOOR SYSTEM (LMI)

gensteel doors
www.gensteeldoors.com
4950 Hickmore, St. Laurent, Quebec, Canada, H4T1K6
Tel: (514) 733-3562 Fax: (514) 733-1932

DATE	10-22-99
SCALE	NTS.
DRAWN	M.G
PROJECT	09-015

DRAWING NO.
AD-09-001

SHEET 6 OF 8

1

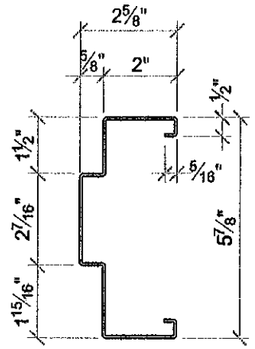

18 GA DOOR FRAME JAMB AND HEAD

6

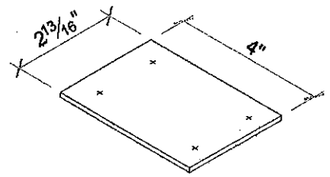

12 GA REINFORCEMENT PLATE

7

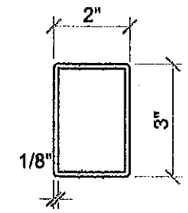

PRECISION HC822 STEEL MULLION

8

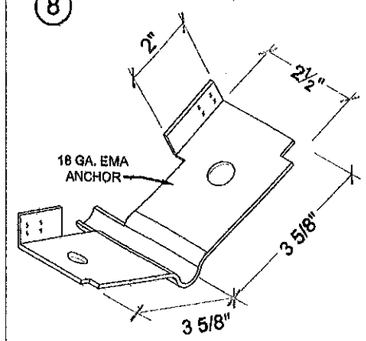

FA3010
EXISTING MASONRY ANCHOR

10

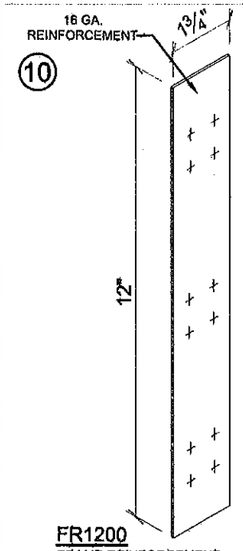

FR1200
FRAME REINFORCEMENT

19

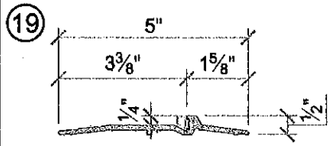

OPTIONAL THRESHOLD
PEMKO 2005AT

2

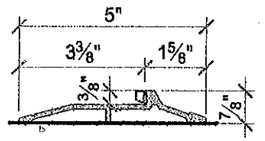

THRESHOLD

4

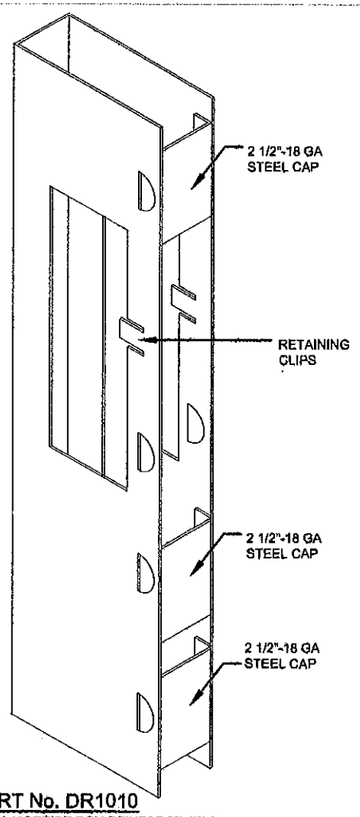

PART No. DR1010
18 GA MORTISE BOX REINFORCEMENT

11

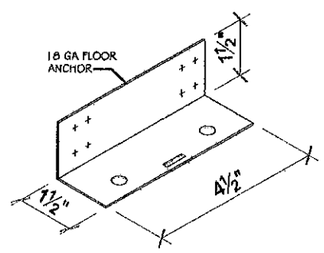

FA1040
FLOOR ANCHOR

12

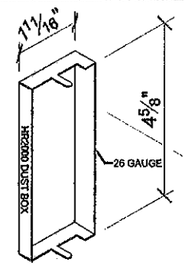

HR2000
DUST BOX

13

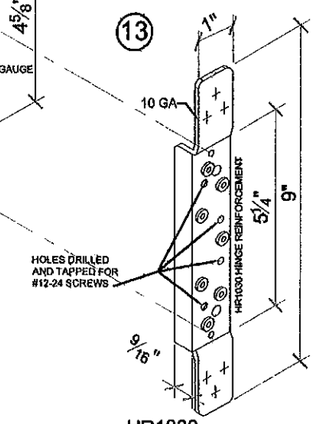

HR1030
10 GA HINGE REINFORCEMENT

14

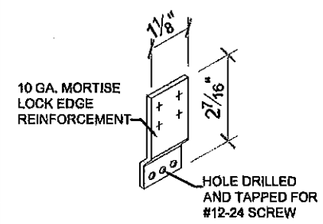

DR1700
MORTISE LOCK EDGE REINFORCEMENT

15

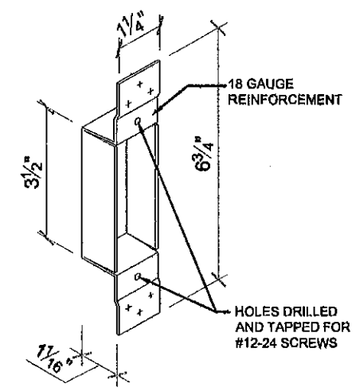

FR1100
ASA STRIKE BOX REINFORCEMENT

16

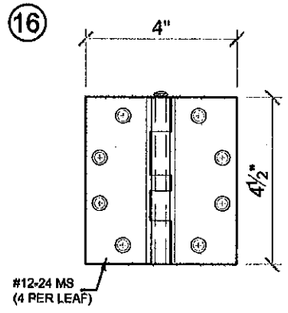

.134" THICK STEEL HINGE

17

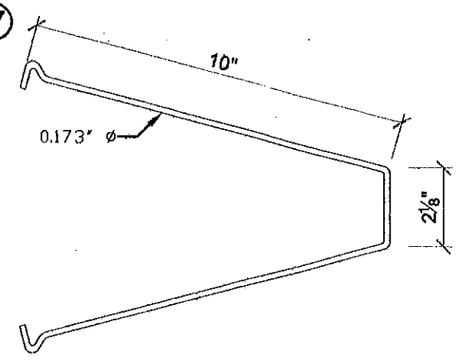

FA3030
MASONRY WIRE ANCHOR Fy = 60 ksi

21

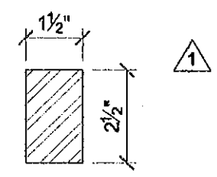

A - 36

1

PRODUCT REVIEW
In compliance with the Florida Building Code
Acceptance No. 10-1021.07
Expiration Date July 14, 2016
By: Chang J. Lavarde
Miami-Dade Product Control

MIAMI DADE COUNTY

YIPING WANG, P.E.
FLORIDA REGISTRATION
PE #55983
C.A.N. 28677

JAN 04 2011

REVISIONS

NO	DATE	DESCRIPTION
1	7/10/10	BCCO COMMENTS
2	1/4/11	BCCO COMMENTS

MCY ENGINEERING, INC.
GLAZING CONSULTANTS
9110 SW SUNSET DRIVE. P: 305.271.0117
MIAMI, FL 33173 F: 786.573.5063
www.MCYEngineering.com MCY.Engineering@Att.net

GENSTORM OPAQUE OUTSWING STEEL DOOR SYSTEM (LMI)

gensteel doors
4950 Hickmore, St. Laurent, Quebec, Canada, H4T1K6
Tel: (514) 733-3562 Fax: (514) 733-1932
www.gensteeldoors.com

DATE	10-22-99
SCALE	NTS.
DRAWN	M.Q
PROJECT	09-015

DRAWING NO.
AD-09-001

SHEET 7 OF 8

BILL OF MATERIALS

ITEM	PART No.	MATERIAL	QTY.	DESCRIPTION	MANUFACTURER/SUPPLIER/ REMARKS
1	-	STEEL OR ST/ST	AS REQD.	FRAME HEAD/JAMB (5-7/8" x 2")	18 GA. (0.048MIN.) Fy= 42KSI MIN.
2	PMK177-T	ALUM.	1	THRESHOLD WITH THERMO SEAL INSERT	PEMKO 177AT W/ THERMOSEAL(T)
3	-	STEEL OR ST/ST	AS REQD.	DOOR PANEL	20 GA. (0.036MIN) Fy= 42 KSI MIN.
4	DR1010	STEEL	AS REQD.	MORTISE BOX REINFORCEMENT	GENSTEEL
5	P 387	-	AS REQD.	PEMKO 387 CLOSED CELL SPONGE WEATHERSTRIP	PEMKO
6	-	STEEL	AS REQD.	2-3/16" x 4" 12 GA. STEEL REINFORCEMENT	GENSTEEL
7	HC822	STEEL	AS REQD.	2" X 3" X 1/8" REMOVABLE MULLION	PRECISION HARDWARE HC822 Fy = 46 ksi
8	FA3010	STEEL	AS REQD.	EXISTING MASONRY ANCHOR	GENSTEEL
9	SB453	-	AS REQD.	SURFACE BOLT	IVES SB453
10	FR1200	STEEL	AS REQD.	1-3/4" x 12" 16 GA. FRAME REINFORCEMENT	GENSTEEL
11	FA1040	STEEL	2	FLOOR ANCHOR 18 GA. (1-1/2" x 1-1/2" x 4-1/2" LG)	GENSTEEL
12	HR2000	STEEL	3 PER LEAF	HINGE DUSTBOX	GENSTEEL
13	HR1030	STEEL	3 PER LEAF	HINGE REINFORCEMENT WELDED TO FRAME	GENSTEEL
14	DR1700	STEEL	AS REQD.	MORTISE LOCK EDGE REINFORCEMENT WELDED	GENSTEEL
15	FR1100	STEEL	AS REQD.	ASA STRIKE BOX	GENSTEEL
16	179-454	STEEL	3 PER LEAF	DOREX, HAGER #179-454-15 HINGE	STANLEY
17	FA3030	STEEL	AS REQD.	MASONRY WIRE ANCHOR	.173 DIA.
18	-	STEEL	AS REQD.	20GA. DUSTBOX	GENSTEEL
19	PMK2005AT	ALUM.	1	OPTIONAL THRESHOLD WITH THERMO SEAL INSERT	PEMKO 2005AT W/ THERMOSEAL(T)
20	PEMKO 315_N	-	1 PER LEAF.	WEATHERSTRIP AT BOTTOM OF PANEL	PEMKO
21	-	STEEL	1 PER MULLION	1 1/2" x 2 1/2" FULL LENGTH STEEL BAR REINFORCEMENT	A36 PRECISION HARDWARE HC822 INSERT
22	PEMKO P375	-	AS REQD.	PEMKO 375CR ASTRAGAL WITH SPONGE NEOPRENE	PEMKO WEATHERSTRIP APPLY WHEN WATER INFILTRATION IS REQUIRED
23	HONEYCOMB	-	AS REQD.	INSIDE OF DOOR PANEL	GENSTEEL

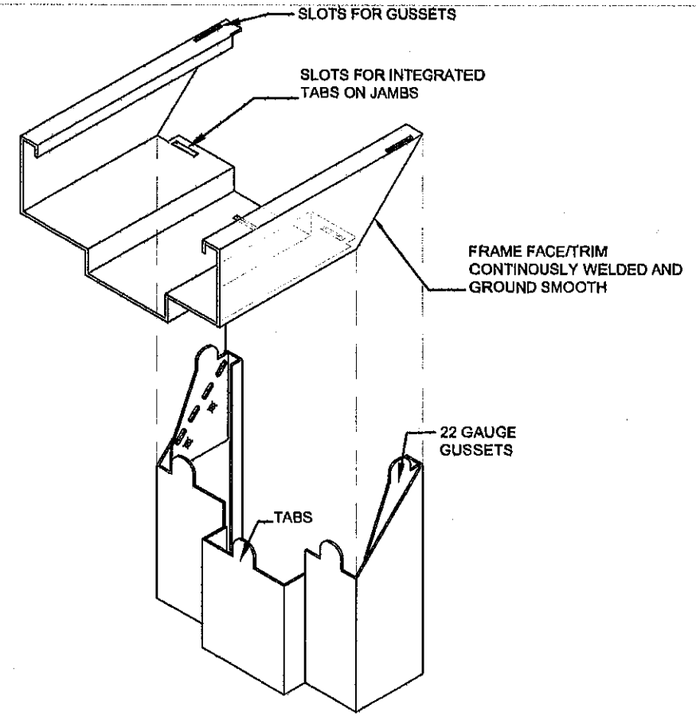

CORNER FRAME CONSTRUCTION

PRODUCT REVISED
as complying with the Florida Building Code
Acceptance No. 10-1021.07
Expiration Date July 14, 2015
By Shaq L. Charuda
Miami Dade Product Control

MIAMI DADE COUNTY

YIPING WANG, P.E.
FLORIDA REGISTRATION
PE #55983
C.A.N. 28677

JAN 04 2011

REVISIONS		
NO	DATE	DESCRIPTION
1	7/10/10	BCCO COMMENTS
2	1/4/11	BCCO COMMENTS

MCY ENGINEERING, INC.
GLAZING CONSULTANTS
9110 SW SUNSET DRIVE. P: 305.271.0117
MIAMI, FL 33173 F: 786.573.5063
www.MCYEngineering.comMCY.Engineering@Att.net

GENSTORM OPAQUE OUTSWING STEEL DOOR SYSTEM (LMI)

genteel doors
www.genteeldoors.com
4950 Hickmore, St. Laurent, Quebec, Canada, H4T1K6
Tel: (514) 733-3562 Fax: (514) 733-1932

DATE	10-22-99
SCALE	NTS.
DRAWN	M.G
PROJECT	09-015

DRAWING NO.
AD-09-001

SHEET 8 OF 8