MIAMI-DADE COUNTY
BUILDING AND NEIGHBORHOOD COMPLIANCE DEPARTMENT (BNC)
BOARD AND CODE ADMINISTRATION DIVISION

MIAMI-DADE COUNTY
PRODUCT CONTROL SECTION
11805 SW 26 Street, Room 208
Miami, Florida 33175-2474
T (786) 315-2590 F (786) 315-2599
www.miamidade.gov/building/home/asp

NOTICE OF ACCEPTANCE (NOA)

PGT Industries
1070 Technology Drive
Nokomis, FL 34275

SCOPE:

This NOA is being issued under the applicable rules and regulations governing the use of construction materials. The documentation submitted has been reviewed by Miami-Dade County Product Control Section and accepted by the Board of Rules and Appeals (BORA) to be used in Miami Dade County and other areas where allowed by the Authority Having Jurisdiction (AHJ).

This NOA shall not be valid after the expiration date stated below. The Miami-Dade County Product Control Section (In Miami-Dade County) and/or the AHJ (in areas other than Miami-Dade County) reserve the right to have this product or material tested for quality assurance purposes. If this product or material fails to perform in the accepted manner, the manufacturer will incur the expense of such testing and the AHJ may immediately revoke, modify, or suspend the use of such product or material within their jurisdiction. BORA reserves the right to revoke this acceptance, if it is determined by Miami-Dade County Product Control Section that this product or material fails to meet the requirements of the applicable building code. This product is approved as described herein, and has been designed to comply with the Florida Building Code, including the High Velocity Hurricane Zone.

DESCRIPTION: Series "SH-600" Aluminum Single Hung Window – N.I.

APPROVAL DOCUMENT: Drawing No. **4032-20**, titled "Alum. Single Hung Window, Non-Impact.", dated 09/21/05 with revision C dated 02/16/07 sheets 1 through 14 of 14, prepared by manufacturer, signed and sealed by Robert L. Clark, P.E., bearing the Miami-Dade County Product Control Renewal stamp with the Notice of Acceptance number and expiration date by the Miami-Dade County Product Control Section.

MISSILE IMPACT RATING: None

LABELING: Each unit shall bear a permanent label with the manufacturer's name or logo, city, state and following statement: "Miami-Dade County Product Control Approved", unless otherwise noted herein.

RENEWAL of this NOA shall be considered after a renewal application has been filed and there has been no change in the applicable building code negatively affecting the performance of this product.

TERMINATION of this NOA will occur after the expiration date or if there has been a revision or change in the materials, use, and/or manufacture of the product or process. Misuse of this NOA as an endorsement of any product, for sales, advertising or any other purposes shall automatically terminate this NOA. Failure to comply with any section of this NOA shall be cause for termination and removal of NOA.

ADVERTISEMENT: The NOA number preceded by the words Miami-Dade County, Florida, and followed by the expiration date may be displayed in advertising literature. If any portion of the NOA is displayed, then it shall be done in its entirety.

INSPECTION: A copy of this entire NOA shall be provided to the user by the manufacturer or its distributors and shall be available for inspection at the job site at the request of the Building Official.

This NOA **renews NOA # 06-1211.07** and consists of this page 1 and evidence pages E-1, E-2 and E-3, as well as approval document mentioned above.

The submitted documentation was reviewed by **Manuel Perez, P.E.**

MIAMI-DADE COUNTY APPROVED

NOTICE OF ACCEPTANCE: EVIDENCE SUBMITTED

A. DRAWINGS

1. Manufacturer's die drawings and sections.
2. Drawing No **4032-20**, Sheets 1 through 14 of 14, titled "Alum. Single Hung Window, Non-Impact", prepared by manufacturer, dated 9/21/05, signed and sealed by Robert L. Clark, P.E.

B. TESTS

1. Test reports on: 1) Uniform Static Air Pressure Test, Loading per FBC TAS 202-94 along with marked-up drawings and installation diagram of Proview aluminum single hung w/integral fin (3/16" temp), prepared by Fenestration Testing Laboratory, Test Report No. **FTL-4886,** dated 03/16/06, signed and sealed by Eduardo Largaespada, P.E.
   (Submitted under previous NOA #06-1211.07)
2. Test reports on: 1) Air Infiltration Test, per FBC, TAS 202-94
   2) Uniform Static Air Pressure Test, Loading per FBC TAS 202-94
   3) Water Resistance Test, per FBC, TAS 202-94
   4) Forced Entry Test, per FBC 3603.2 (b) and TAS 202-94
   along with marked-up drawings and installation diagram of aluminum single hung window w/integral fin (3/16" temp.), prepared by Fenestration Testing Laboratory, Test Report No. **FTL-4959,** dated 07/19/05, signed and sealed by Eduardo Largaespada, P.E.
   (Submitted under previous NOA#05-0928.03)
3. Test reports on: 1) Air Infiltration Test, per FBC, TAS 202-94
   2) Uniform Static Air Pressure Test, Loading per FBC TAS 202-94
   3) Water Resistance Test, per FBC, TAS 202-94
   4) Forced Entry Test, per FBC 3603.2 (b) and TAS 202-94
   along with marked-up drawings and installation diagram of aluminum single hung window (3/16" temp. & 3/16" ann.), prepared by Fenestration Testing Laboratory, Test Report No. **FTL-4655,** dated 07/08/05, signed and sealed by Eduardo Largaespada, P.E.
   (Submitted under previous NOA#05-0928.03)
4. Test reports on: 1) Uniform Static Air Pressure Test, Loading per FBC TAS 202-94
   2) Water Resistance Test, per FBC, TAS 202-94
   3) Forced Entry Test, per FBC 3603.2 (b) and TAS 202-94
   along with marked-up drawings and installation diagram of aluminum single hung window (3/16" ann. IG), prepared by Fenestration Testing Laboratory, Test Report No. **FTL-4658,** dated 07/15/05, signed and sealed by Eduardo Largaespada, P.E.
   (Submitted under previous NOA#05-0928.03)

Manuel Perez, P.E.
Product Control Examiner
NOA No. 10-1101.03
Expiration Date: January 26, 2016
Approval Date: January 27, 2011

NOTICE OF ACCEPTANCE: EVIDENCE SUBMITTED

5. Test reports on 1) Uniform Static Air Pressure Test, Loading per FBC, TAS 202-94 along with marked-up drawings and installation diagram of aluminum single hung window (1/8" ann. IG), prepared by Fenestration Testing Laboratory, Test Report No. **FTL-4657,** dated 07/08/05, signed and sealed by Eduardo Largaespada, P.E.
   (Submitted under previous NOA #05-0105.01)
6. Test reports on: 1) Air Infiltration Test, per FBC, TAS 202-94
   2) Uniform Static Air Pressure Test, Loading per FBC TAS 202-94
   3) Water Resistance Test, per FBC, TAS 202-94
   4) Forced Entry Test, per FBC 3603.2 (b) and TAS 202-94
   along with marked-up drawings and installation diagram of aluminum single hung window (1/8" temp. IG), prepared by Fenestration Testing Laboratory, Test Report No. **FTL-4656,** dated 07/07/05, signed and sealed by Eduardo Largaespada, P.E.
   (Submitted under previous NOA #05-0105.01)
7. Test reports on: 1) Air Infiltration Test, per FBC, TAS 202-94
   2) Uniform Static Air Pressure Test, Loading per FBC TAS 202-94
   3) Water Resistance Test, per FBC, TAS 202-94
   4) Forced Entry Test, per FBC 3603.2 (b) and TAS 202-94
   along with marked-up drawings and installation diagram of aluminum single hung window (1/8" ann. IG), prepared by Fenestration Testing Laboratory, Test Report No. **FTL-4654,** dated 07/07/05, signed and sealed by Eduardo Largaespada, P.E.
   (Submitted under previous NOA #05-0105.01)
8. Test reports on: 1) Air Infiltration Test, per FBC, TAS 202-94
   2) Uniform Static Air Pressure Test, Loading per FBC TAS 202-94
   3) Water Resistance Test, per FBC, TAS 202-94
   4) Forced Entry Test, per FBC 3603.2 (b) and TAS 202-94
   along with marked-up drawings and installation diagram of aluminum single hung window (3/16" temp. 3/16" ann. & 3/16" ann. IG), prepared by Fenestration Testing Laboratory, Test Report No. **FTL-4653,** dated 07/07/05, signed and sealed by Eduardo Largaespada, P.E.
   (Submitted under previous NOA #05-0105.01)

C. CALCULATIONS:

1. Anchor verification calculations and structural analysis, complying with FBC-2007, prepared by manufacturer, dated 12/05/06 and 10/15/10, signed and sealed by Robert L. Clark, P.E.
2. Glazing complies with ASTM E1300-04.

D. QUALITY ASSURANCE

1. Miami-Dade Building and Neighborhood Compliance Department (BNC).

Manuel Perez, P.E.
Product Control Examiner
NOA No. 10-1101.03
Expiration Date: January 26, 2016
Approval Date: January 27, 2011

NOTICE OF ACCEPTANCE: EVIDENCE SUBMITTED

E. MATERIAL CERTIFICATIONS

1. None.

F. STATEMENTS

1. Statement letter of conformance, dated October 15, 2010, signed and sealed by Robert L. Clark, P.E.
2. Statement letter of no financial interest, dated October 15, 2010, signed and sealed by Robert L. Clark, P.E.

G. OTHER

1. Notice of Acceptance No. **06-1211.07**, issued to PGT Industries for their Series "SH-600" Aluminum Single Hung Window – N.I.", approved on 03/23/07 and expiring on 01/26/11.

Manuel Perez, P.E.
Product Control Examiner
NOA No. 10-1101.03
Expiration Date: January 26, 2016
Approval Date: January 27, 2011

GENERAL NOTES: NON-IMPACT SINGLE HUNG FLANGED AND INTEGRAL FIN WINDOWS

1. GLAZING OPTIONS: (SEE DETAILS ON SHEET 2)
   - A. 3/16" ANNEALED GLASS
   - B. 3/16" TEMPERED GLASS
   - C. 1/4" ANNEALED GLASS
   - D. 1/4" TEMPERED GLASS
   - E. 13/16" I.G., 1/8" ANNEALED OUTBOARD, AIR SPACE, 1/8" ANNEALED INBOARD
   - F. 13/16" I.G., 1/8" TEMPERED OUTBOARD, AIR SPACE, 1/8" TEMPERED INBOARD
   - G. 13/16" I.G., 3/16" ANNEALED OUTBOARD, AIR SPACE, 3/16" ANNEALED INBOARD
   - H. 13/16" I.G., 3/16" TEMPERED OUTBOARD, AIR SPACE, 3/16" TEMPERED INBOARD
   - I. 13/16" I.G., 3/16" ANNEALED OUTBOARD, AIR SPACE, 1/8" ANNEALED INBOARD
   - J. 13/16" I.G., 3/16" TEMPERED OUTBOARD, AIR SPACE, 1/8" TEMPERED INBOARD
2. CONFIGURATIONS: "OX" (1/1, VIEW AND RADIUS TOP, ALL W/ LOW OR HIGH SILL OPTION)
3. DESIGN PRESSURES: SEE TABLES 1 THROUGH 3, SHEETS 3 THROUGH 5.
   - A. NEGATIVE DESIGN LOADS BASED ON TESTED PRESSURE AND GLASS TABLES ASTM E 1300-02.
   - B. POSITIVE DESIGN LOADS BASED ON WATER TEST PRESSURE AND GLASS TABLES ASTM E 1300-02.
   - C. DESIGN PRESSURES UNDER 40 PSF ARE NOT APPLICABLE IN MIAMI-DADE COUNTY.
4. ANCHORAGE: THE 33 1/3% STRESS INCREASE HAS NOT BEEN USED IN THE DESIGN OF THIS PRODUCT. SEE SHEETS 10 THROUGH 14 FOR ANCHORAGE DETAILS.
5. MIAMI-DADE COUNTY APPROVED SHUTTERS ARE REQUIRED IN MIAMI-DADE AND WHERE IMPACT RESISTANCE IS REQUIRED,
6. FRAME AND PANEL CORNERS SEALED WITH NARROW JOINT SEALANT OR GASKET.
7. REFERENCES: TEST REPORTS FTL-4653, FTL-4654, FTL-4655, FTL-4656, FTL-4657, FTL-4658, FTL-4886 AND FTL-4959.
   ANSI/AF&PA NDS-2001 FOR WOOD CONSTRUCTION
   ADM-2000 ALUMINUM DESIGN MANUAL
8. SERIES/MODEL DESIGNATION SH600, ALSO REFERRED TO AS SH701.
9. THIS PRODUCT HAS BEEN DESIGNED & TESTED TO COMPLY WITH THE REQUIREMENTS OF THE FLORIDA BUILDING CODE, CURRENT EDITION INCLUDING THE HIGH VELOCITY HURRICANE ZONE (HVHZ).

NOA DRAWING MAP

	SHEET
GENERAL NOTES	1
GLAZING DETAILS	2
DESIGN PRESSURES	3-5
ELEVATIONS	6
VERT. SECTIONS	7
HORIZ. SECTIONS	7
PARTS LIST	8
CORNER DETAIL	9
EXTRUSIONS	8, 9
ANCHORAGE	10 -14

PRODUCT RENEWED
as complying with the Florida Building Code
Acceptance No. 10-1101.03
Expiration Date JAN. 26, 2016
By Manuel Pere
Miami Dade Product Control Division

PRODUCT REVISED
as complying with the Florida Building Code
Acceptance No. 06-1214.07
Expiration Date 01/26/11
By
Miami Dade Product Control Division

2/27/07
Robert L. Clark, P.E.
PE #39712
Structural

Revsd By:	Date:	Revisions:	
F.K.	2/16/07	C	NO CHANGE THIS SHEET
F.K.	2/6/07	B	REPLACE 2004 WITH CURRENT ADDITION, NOTE 9
F.K.	11/27/06	A	CHANGE NOTES 3, 4 AND 7. ADD NOTE 9.
Drawn By: F.K.	Date: 7/4/05	Checked By: J.J.	Date: 9/21/05

1070 TECHNOLOGY DRIVE
NOKOMIS, FL 34275
P.O. BOX 1529
NOKOMIS, FL 34274

PGT Visibly Better

Description: GENERAL NOTES
Title: ALUM. SINGLE HUNG WINDOW, NON-IMPACT

Series/Model:	Scale:	Sheet:	Drawing No.	Rev:
SH600	NTS	1 of 14	4032-20	C

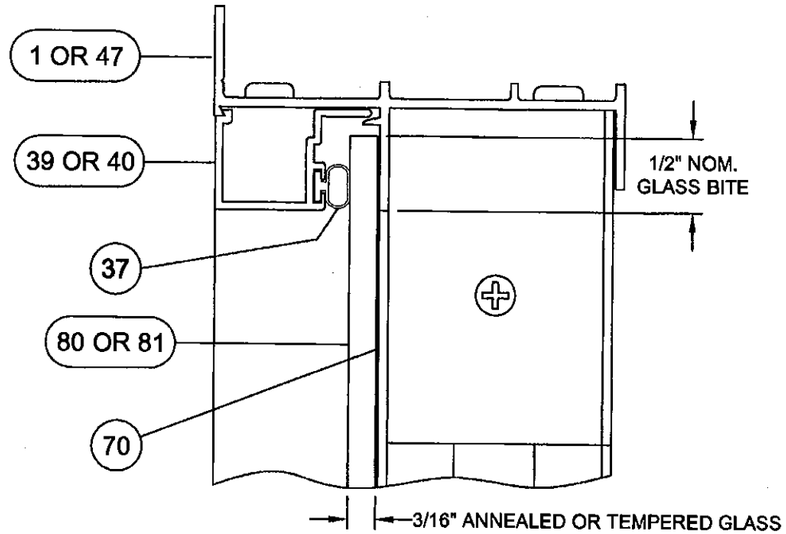

3/16" MONOLITHIC GLASS

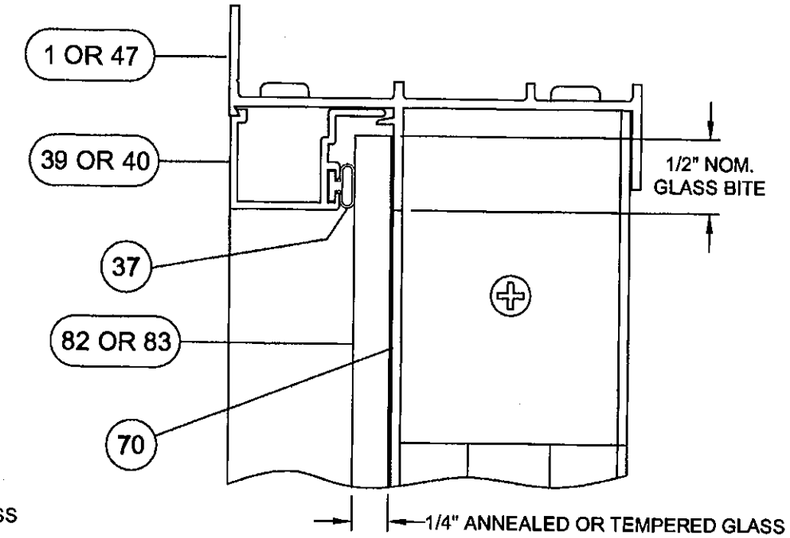

1/4" MONOLITHIC GLASS

EXTERIOR INTERIOR
(ALL SECTIONS)

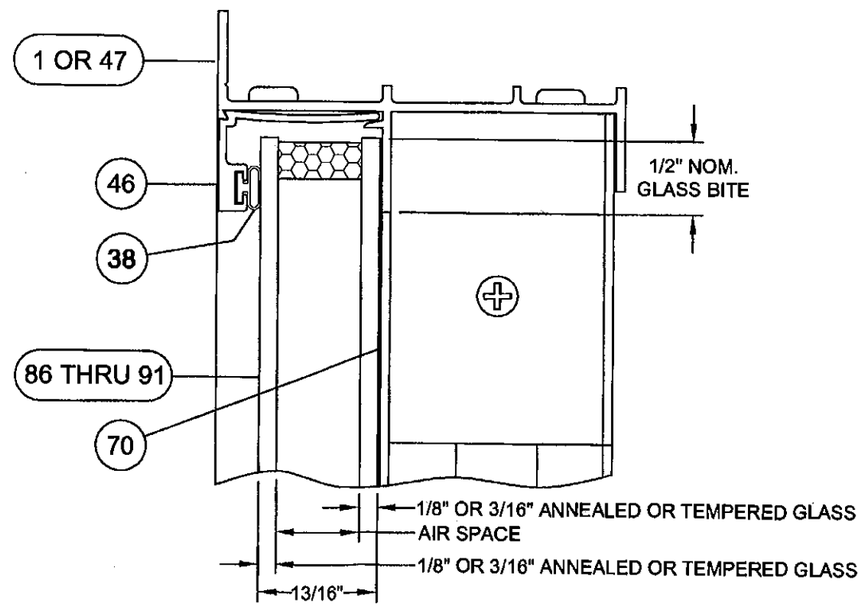

13/16" INSULATED GLASS

PRODUCT RENEWED
as complying with the Florida
Building Code
Acceptance No 10-1101.03
Expiration Date JAN. 26, 2016
By
Miami Dade Product Control
Division

PRODUCT REVISED
as complying with the Florida
Building Code
Acceptance No 06-1211.07
Expiration Date 01/26/11
By
Miami Dade Product Control
Division

Revsd By:	Date:	Revisions:	
F.K.	2/16/07	C	NO CHANGE THIS SHEET
F.K.	2/6/07	B	NO CHANGE THIS SHEET
F.K.	11/27/06	A	ADD I.F. OPTION ITEM NO.
Drawn By: F.K.	Date: 7/4/05	Checked By: J.J.	Date: 9/21/05

1070 TECHNOLOGY DRIVE
NOKOMIS, FL 34275

P.O. BOX 1529
NOKOMIS, FL 34274

PGT
Visibly Better

Description: GLAZING DETAILS

Title: ALUM. SINGLE HUNG WINDOW, NON-IMPACT

Series/Model:	Scale:	Sheet:	Drawing No.	Rev:
SH600	Full	2 of 14	4032-20	C

2/27/07

Robert L. Clark, P.E.
PE #39712
Structural

DESIGN PRESSURES BASED ON FLANGE TIP-TO-TIP DIM. (INTEGRAL FIN WINDOWS W/ SAME DLO ARE 1" SMALLER)
1/1 FLANGE OR INTEGRAL FIN WINDOWS EQUIPPED W/ HIGH SILL OPTION

TABLE 1. 6

WINDOW WIDTH	GLASS TYPE	WINDOW HEIGHT 26"		38 3/8"		44"		50 5/8"		63"		72"		74"		76"	
19 1/8"	A,C,E,I	+80.0	-120.0	+80.0	-120.0	+80.0	-120.0	+80.0	-120.0	+80.0	-94.6	+78.5	-78.5	+75.7	-75.7	+73.0	-73.0
	G	+80.0	-120.0	+80.0	-120.0	+80.0	-120.0	+80.0	-120.0	+80.0	-120.0	+80.0	-114.2	+80.0	-110.1	+80.0	-106.2
	B,D,F,H,J	+80.0	-120.0	+80.0	-120.0	+80.0	-120.0	+80.0	-120.0	+80.0	-120.0	+80.0	-120.0	+80.0	-120.0	+80.0	-119.5
24"	A,C,E,I	+80.0	-120.0	+80.0	-120.0	+80.0	-120.0	+80.0	-120.0	+80.0	-84.9	+68.9	-68.9	+66.2	-66.2	+63.6	-63.6
	G	+80.0	-120.0	+80.0	-120.0	+80.0	-120.0	+80.0	-120.0	+80.0	-120.0	+80.0	-100.3	+80.0	-96.3	+80.0	-92.6
	B,D,F,H,J	+80.0	-120.0	+80.0	-120.0	+80.0	-120.0	+80.0	-120.0	+80.0	-120.0	+80.0	-112.8	+80.0	-108.3	+80.0	-104.1
32"	A,C,E,I	+80.0	-120.0	+80.0	-120.0	+80.0	-120.0	+80.0	-120.0	+80.0	-80.0	+62.0	-62.0	+59.1	-59.1	+56.4	-56.4
	G	+80.0	-120.0	+80.0	-120.0	+80.0	-120.0	+80.0	-120.0	+80.0	-116.4	+80.0	-90.3	+80.0	-86.0	+80.0	-82.0
	B,D,F,H,J	+80.0	-120.0	+80.0	-120.0	+80.0	-120.0	+80.0	-120.0	+80.0	-120.0	+80.0	-101.5	+80.0	-96.7	+80.0	-92.3
37"	A	+80.0	-120.0	+80.0	-120.0	+80.0	-120.0	+80.0	-105.0	+80.0	-80.0	+61.3	-61.3	+58.0	-58.0	+55.0	-55.0
	B,D,F,H,J	+80.0	-120.0	+80.0	-120.0	+80.0	-120.0	+80.0	-120.0	+80.0	-120.0	+80.0	-100.3	+80.0	-94.9	+80.0	-90.1
	G	+80.0	-120.0	+80.0	-120.0	+80.0	-120.0	+80.0	-120.0	+80.0	-116.4	+80.0	-89.1	+80.0	-84.4	+80.0	-80.1
	C,E, I	+80.0	-120.0	+80.0	-120.0	+80.0	-120.0	+80.0	-115.0	+80.0	-80.0	+61.3	-61.3	+58.0	-58.0	+55.0	-55.0
40"	A	+80.0	-120.0	+80.0	-120.0	+80.0	-111.8	+80.0	-91.6	+80.0	-80.0	+61.3	-61.3	+58.0	-58.0	+55.0	-55.0
	B,D,F,H,J	+80.0	-120.0	+80.0	-120.0	+80.0	-120.0	+80.0	-120.0	+80.0	-120.0	+80.0	-100.3	+80.0	-94.9	+80.0	-90.0
	G	+80.0	-120.0	+80.0	-120.0	+80.0	-120.0	+80.0	-120.0	+80.0	-116.4	+80.0	-89.1	+80.0	-84.4	+80.0	-80.0
	C,E, I	+80.0	-120.0	+80.0	-113.0	+80.0	-107.0	+80.0	-103.0	+80.0	-80.0	+61.3	-61.3	+58.0	-58.0	+55.0	-55.0
44"	A	+80.0	-120.0	+80.0	-108.0	+80.0	-95.8	+80.0	-85.6	+76.4	-76.4	+61.3	-61.3	+58.0	-58.0	+55.0	-55.0
	B,D,F,H,J	+80.0	-120.0	+80.0	-120.0	+80.0	-120.0	+80.0	-120.0	+80.0	-120.0	+80.0	-100.3	+80.0	-94.9	+80.0	-90.0
	G	+80.0	-120.0	+80.0	-120.0	+80.0	-120.0	+80.0	-120.0	+80.0	-116.4	+80.0	-89.1	+80.0	-84.4	+80.0	-80.0
	C,E, I	+80.0	-120.0	+80.0	-104.0	+80.0	-93.8	+80.0	-89.9	+80.0	-80.0	+61.3	-61.3	+58.0	-58.0	+55.0	-55.0
48"	A	+80.0	-120.0	+80.0	-96.8	+80.0	-87.6	+78.0	-78.0	+68.3	-68.3	+61.3	-61.3	+58.0	-58.0	+55.0	-55.0
	B,D,F,H,J	+80.0	-120.0	+80.0	-120.0	+80.0	-120.0	+80.0	-120.0	+80.0	-114.9	+80.0	-100.3	+80.0	-94.9	+80.0	-90.0
	G	+80.0	-120.0	+80.0	-120.0	+80.0	-120.0	+80.0	-116.0	+80.0	-102.1	+80.0	-89.1	+80.0	-84.4	+80.0	-80.0
	C,E, I	+80.0	-120.0	+80.0	-94.8	+80.0	-83.7	+79.7	-79.7	+70.2	-70.2	+61.3	-61.3	+58.0	-58.0	+55.0	-55.0
53 1/8"	A	+80.0	-117.7	+80.0	-85.4	+77.0	-77.0	+69.6	-69.6	+59.5	-59.5	+56.4	-56.4	+55.7	-55.7	+55.0	-55.0
	B,D,F,H,J	+80.0	-120.0	+80.0	-120.0	+80.0	-120.0	+80.0	-113.9	+80.0	-99.1	+80.0	-92.3	+80.0	-91.1	+80.0	-90.0
	G	+80.0	-120.0	+80.0	-120.0	+80.0	-111.9	+80.0	-101.3	+80.0	-88.1	+80.0	-82.0	+80.0	-81.0	+80.0	-80.0
	C,E, I	+80.0	-117.7	+80.0	-85.4	+73.9	-73.9	+69.6	-69.6	+60.6	-60.6	+56.4	-56.4	+55.7	-55.7	+55.0	-55.0

GLASS TYPES:

A. 3/16" ANNEALED
B. 3/16" TEMPERED
C. 1/4" ANNEALED
D. 1/4" TEMPERED
E. 13/16" I.G., 1/8" ANNEALED, AIR SPACE, 1/8" ANNEALED
F. 13/16" I.G., 1/8" TEMPERED, AIR SPACE, 1/8" TEMPERED
G. 13/16" I.G., 3/16" ANNEALED, AIR SPACE, 3/16" ANNEALED
H. 13/16" I.G., 3/16" TEMPERED, AIR SPACE, 3/16" TEMPERED
I. 13/16" I.G., 3/16" ANNEALED, AIR SPACE, 1/8" ANNEALED
J. 13/16" I.G., 3/16" TEMPERED, AIR SPACE, 1/8" TEMPERED

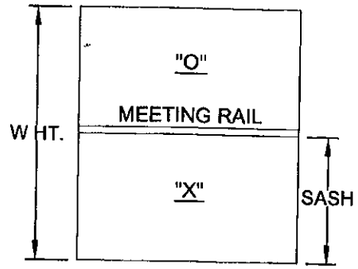

LOW SILL OPTION:
WINDOWS WITH THE LOW SILL OPTION ARE LIMITED TO A POSITIVE DESIGN PRESSURE OF +64.0 PSF OR LOWER AS SHOWN IN THE TABLE. NEGATIVE DESIGN PRESSURES ARE UNEFFECTED.

PRODUCT RENEWED
as complying with the Florida Building Code
Acceptance No. 10-1101.03
Expiration Date JAN. 26, 2016
By Manuel Cruz
Miami Dade Product Control Division

PRODUCT REVISED
as complying with the Florida Building Code
Acceptance No. 06-1211.07
Expiration Date 01/26/11
By
Miami Dade Product Control Division

2/27/07
Robert L. Clark, P.E.
PE #39712
Structural

Revsd By:	Date:	Revisions:	
F.K.	2/16/07	C	COMBINE GLASS TYPE C & ISOLATE GLASS TYPE G
F.K.	2/6/07	B	CORRECT 40" GLASS TYPE TO C, WAS C,G
F.K.	11/27/06	A	REDUCE MAX. NEG. DP TO FACILITATE ANCHORAGE. REVISE TO ASTM E 1300-02 AND ADD FIN OPTION.
Drawn By: F.K.	Date: 7/4/05	Checked By: J.J.	Date: 9/21/05

1070 TECHNOLOGY DRIVE
NOKOMIS, FL 34275
P.O. BOX 1529
NOKOMIS, FL 34274

PGT Visibly Better

Description: DESIGN PRESSURES, 1/1 WINDOWS
Title: ALUM. SINGLE HUNG WINDOW, NON-IMPACT

Series/Model:	Scale:	Sheet:	Drawing No.	Rev:
SH600	NTS	3 of 14	4032-20	C

DESIGN PRESSURES BASED ON FLANGE TIP-TO-TIP DIM. (INTEGRAL FIN WINDOWS W/ SAME DLO ARE 1" SMALLER)
STANDARD VIEW FLANGE, INTEGRAL FIN AND RADIUS TOP FLANGE WINDOWS EQUIPPED W/ HIGH SILL OPTION

TABLE 2.

WINDOW WIDTH	GLASS TYPE	WINDOW HEIGHT															
		29 3/4"		38 3/8"		44"		50 5/8"		63"		72"		74"		76"	
19 1/8"	A,C,E,G,I	+80.0	-120.0	+80.0	-120.0	+80.0	-120.0	+80.0	-120.0	+80.0	-86.4	+51.3	-51.3	+49.3	-49.3	+47.5	-47.5
	B, D, F, H, J	+80.0	-120.0	+80.0	-120.0	+80.0	-120.0	+80.0	-120.0	+80.0	-120.0	+80.0	-102.7	+80.0	-98.6	+80.0	-94.9
24"	A,C,E,G,I	+80.0	-120.0	+80.0	-120.0	+80.0	-120.0	+80.0	-120.0	+80.0	-80.6	+46.4	-46.4	+44.4	-44.4	+42.5	-42.5
	B, D, F, H, J	+80.0	-120.0	+80.0	-120.0	+80.0	-120.0	+80.0	-120.0	+80.0	-120.0	+80.0	-92.9	+80.0	-88.8	+80.0	-85.0
32"	A,C,E,G,I	+80.0	-120.0	+80.0	-120.0	+80.0	-120.0	+80.0	-120.0	+80.0	-80.0	+44.6	-44.6	+42.2	-42.2	+40.0	-40.0
	B, D, F, H, J	+80.0	-120.0	+80.0	-120.0	+80.0	-120.0	+80.0	-120.0	+80.0	-120.0	+80.0	-89.1	+80.0	-84.4	+80.0	-80.0
37"	A	+80.0	-120.0	+80.0	-119.0	+80.0	-94.5	+80.0	-93.0	+80.0	-80.0	+44.6	-44.6	+42.2	-42.2	+40.0	-40.0
	B, D, F, H, J	+80.0	-120.0	+80.0	-120.0	+80.0	-120.0	+80.0	-120.0	+80.0	-120.0	+80.0	-89.1	+80.0	-84.4	+80.0	-80.0
	C,G	+80.0	-120.0	+80.0	-120.0	+80.0	-120.0	+80.0	-115.6	+80.0	-80.0	+44.6	-44.6	+42.2	-42.2	+40.0	-40.0
	E, I	+80.0	-120.0	+80.0	-119.0	+80.0	-114.0	+80.0	-107.0	+80.0	-80.0	+44.6	-44.6	+42.2	-42.2	+40.0	-40.0
40"	A	+80.0	-120.0	+80.0	-109.0	+80.0	-90.4	+80.0	-88.6	+76.3	-76.3	+44.6	-44.6	+42.2	-42.2	+40.0	-40.0
	B, D, F, H, J	+80.0	-120.0	+80.0	-120.0	+80.0	-120.0	+80.0	-120.0	+80.0	-120.0	+80.0	-89.1	+80.0	-84.4	+80.0	-80.0
	C,G	+80.0	-120.0	+80.0	-120.0	+80.0	-111.2	+80.0	-102.8	+80.0	-80.0	+44.6	-44.6	+42.2	-42.2	+40.0	-40.0
	E, I	+80.0	-120.0	+80.0	-107.0	+80.0	-104.0	+80.0	-98.2	+80.0	-80.0	+44.6	-44.6	+42.2	-42.2	+40.0	-40.0
44"	A	+80.0	-120.0	+80.0	-92.7	+80.0	-84.5	+80.0	-82.7	+70.4	-70.4	+44.6	-44.6	+42.2	-42.2	+40.0	-40.0
	B, D, F, H, J	+80.0	-120.0	+80.0	-120.0	+80.0	-120.0	+80.0	-120.0	+80.0	-120.0	+80.0	-89.1	+80.0	-84.4	+80.0	-80.0
	C,G	+80.0	-120.0	+80.0	-107.2	+80.0	-97.6	+80.0	-89.5	+80.0	-80.0	+44.6	-44.6	+42.2	-42.2	+40.0	-40.0
	E, I	+80.0	-120.0	+80.0	-93.2	+80.0	-91.9	+80.0	-89.5	+76.3	-76.3	+44.6	-44.6	+42.2	-42.2	+40.0	-40.0
48"	A	+80.0	-117.0	+80.0	-89.2	+76.7	-76.7	+74.8	-74.8	+63.0	-63.0	+44.6	-44.6	+42.2	-42.2	+40.0	-40.0
	B, D, F, H, J	+80.0	-120.0	+80.0	-120.0	+80.0	-120.0	+80.0	-120.0	+80.0	-114.7	+80.0	-89.1	+80.0	-84.4	+80.0	-80.0
	C,G	+80.0	-117.0	+80.0	-96.0	+80.0	-87.0	+79.3	-79.3	+70.1	-70.1	+44.6	-44.6	+42.2	-42.2	+40.0	-40.0
	E, I	+80.0	-113.0	+80.0	-82.4	+80.0	-81.3	+79.3	-79.3	+70.1	-70.1	+44.6	-44.6	+42.2	-42.2	+40.0	-40.0
53 1/8"	A	+80.0	-103.8	+80.0	-84.4	+69.2	-69.2	+66.3	-66.3	+56.7	-56.7	+41.0	-41.0	+40.5	-40.5	+40.0	-40.0
	B, D, F, H, J	+80.0	-120.0	+80.0	-120.0	+80.0	-120.0	+80.0	-113.2	+80.0	-98.8	+80.0	-81.9	+80.0	-80.9	+80.0	-80.0
	C,G	+80.0	-103.8	+80.0	-84.6	+76.3	-76.3	+69.2	-69.2	+60.4	-60.4	+41.0	-41.0	+40.5	-40.5	+40.0	-40.0
	E, I	+80.0	-103.8	+72.5	-72.5	+70.6	-70.6	+69.2	-69.2	+60.4	-60.4	+41.0	-41.0	+40.5	-40.5	+40.0	-40.0

GLASS TYPES:

A. 3/16" ANNEALED
B. 3/16" TEMPERED
C. 1/4" ANNEALED
D. 1/4" TEMPERED
E. 13/16" I.G., 1/8" ANNEALED, AIR SPACE, 1/8" ANNEALED
F. 13/16" I.G., 1/8" TEMPERED, AIR SPACE, 1/8" TEMPERED
G. 13/16" I.G., 3/16" ANNEALED, AIR SPACE, 3/16" ANNEALED
H. 13/16" I.G., 3/16" TEMPERED, AIR SPACE, 3/16" TEMPERED
I. 13/16" I.G., 3/16" ANNEALED, AIR SPACE, 1/8" ANNEALED
J. 13/16" I.G., 3/16" TEMPERED, AIR SPACE, 1/8" TEMPERED

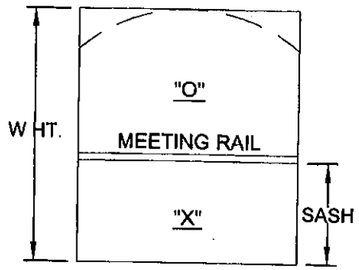

LOW SILL OPTION:
WINDOWS WITH THE LOW SILL OPTION ARE LIMITED TO A POSITIVE DESIGN PRESSURE OF +64.0 PSF OR LOWER AS SHOWN IN THE TABLE. NEGATIVE DESIGN PRESSURES ARE UNEFFECTED.

PRODUCT RENEWED
as complying with the Florida Building Code
Acceptance No. 10-1101.03
Expiration Date JAN. 26, 2016
By
Miami-Dade Product Control Division

PRODUCT REVISED
as complying with the Florida Building Code
Acceptance No. 06-124.07
Expiration Date 01/26/11
By
Miami-Dade Product Control Division

2/21/07
Robert L. Clark, P.E.
PE #39712
Structural

Revsd By:	Date:	Revisions:	
F.K.	2/16/07	C	NO CHANGE THIS SHEET
F.K.	2/6/07	B	NO CHANGE THIS SHEET
F.K.	11/27/06	A	REDUCE MAX. NEG. DP TO FACILITATE ANCHORAGE. REVISE TO ASTM E 1300-02 AND ADD FIN OPTION.
Drawn By: F.K.	Date: 7/4/05	Checked By: J.J.	Date: 9/21/05

1070 TECHNOLOGY DRIVE
NOKOMIS, FL 34275
P.O. BOX 1629
NOKOMIS, FL 34274

PGT Visibly Better

Description: DESIGN PRESSURES, STANDARD VIEW
Title: ALUM. SINGLE HUNG WINDOW, NON-IMPACT

Series/Model:	Scale:	Sheet:	Drawing No.	Rev:
SH600	NTS	4 of 14	4032-20	C

DESIGN PRESSURES BASED ON FLANGE TIP-TO-TIP DIM. (INTEGRAL FIN WINDOWS W/ SAME DLO ARE 1" SMALLER) TABLE 3.
CUSTOM VIEW FLANGE, INTEGRAL FIN AND RADUS TOP FLANGE WINDOWS W/ HIGH SILL OPTION (WINDOW HT. MINUS SASH HT.)

WINDOW WIDTH	GLASS TYPE	WINDOW HEIGHT MINUS SASH HEIGHT (76" MAX. HT. FLANGED AND 75" MAX. HT. INTEGRAL FIN)															
		17 1/8		22 11/16		28 3/16		33 3/4		39 5/16		44 13/16		50 3/8		55 15/16	
19 1/8	A,C,E,I	+80.0	-120.0	+80.0	-120.0	+80.0	-120.0	+80.0	-120.0	+80.0	-118.0	+80.0	-100.2	+80.0	-87.1	+70.8	-70.8
	B, D, F, H, J	+80.0	-120.0	+80.0	-120.0	+80.0	-120.0	+80.0	-120.0	+80.0	-120.0	+80.0	-120.0	+80.0	-120.0	+80.0	-120.0
	G	+80.0	-120.0	+80.0	-120.0	+80.0	-120.0	+80.0	-120.0	+80.0	-120.0	+80.0	-120.0	+80.0	-120.0	+80.0	-115.1
24	A,C,E,I	+80.0	-120.0	+80.0	-120.0	+80.0	-120.0	+80.0	-120.0	+80.0	-103.0	+80.0	-86.2	+74.1	-74.1	+59.5	-59.5
	B, D, F, H, J	+80.0	-120.0	+80.0	-120.0	+80.0	-120.0	+80.0	-120.0	+80.0	-120.0	+80.0	-120.0	+80.0	-120.0	+80.0	-118.7
	G	+80.0	-120.0	+80.0	-120.0	+80.0	-120.0	+80.0	-120.0	+80.0	-120.0	+80.0	-120.0	+80.0	-120.0	+80.0	-96.8
32	A,C,E,I	+80.0	-111.0	+80.0	-120.0	+80.0	-117.0	+80.0	-94.2	+80.0	-85.7	+74.3	-74.3	+62.6	-62.6	+49.1	-49.1
	B, D, F, H, J	+80.0	-111.0	+80.0	-120.0	+80.0	-120.0	+80.0	-120.0	+80.0	-120.0	+80.0	-120.0	+80.0	-113.5	+80.0	-97.9
	G	+80.0	-111.0	+80.0	-120.0	+80.0	-120.0	+80.0	-120.0	+80.0	-120.0	+80.0	-120.0	+80.0	-101.8	+79.7	-79.7
37	A,C,E,I	+80.0	-98.0	+80.0	-119.0	+80.0	-91.9	+80.0	-86.1	+80.0	-80.5	+70.9	-70.9	+58.8	-58.8	+45.2	-45.2
	B, D, F, H, J	+80.0	-98.0	+80.0	-120.0	+80.0	-120.0	+80.0	-120.0	+80.0	-120.0	+80.0	-120.0	+80.0	-105.8	+80.0	-90.3
	G	+80.0	-98.0	+80.0	-120.0	+80.0	-120.0	+80.0	-120.0	+80.0	-120.0	+80.0	-115.3	+80.0	-95.5	+73.5	-73.5
40	A	+80.0	-92.0	+80.0	-108.0	+80.0	-87.4	+80.0	-81.5	+70.8	-70.8	+69.0	-69.0	+57.3	-57.3	+43.6	-43.6
	B, D, F, H, J	+80.0	-92.0	+80.0	-120.0	+80.0	-120.0	+80.0	-120.0	+80.0	-120.0	+80.0	-120.0	+80.0	-102.7	+80.0	-87.0
	C,E,I	+80.0	-92.0	+80.0	-106.0	+80.0	-103.0	+80.0	-92.8	+70.8	-70.8	+69.9	-69.9	+57.3	-57.3	+43.6	-43.6
	G	+80.0	-92.0	+80.0	-120.0	+80.0	-120.0	+80.0	-118.6	+80.0	-115.0	+80.0	-113.7	+80.0	-93.2	+70.8	-70.8
44	A,C,E,I	+80.0	-85.0	+80.0	-92.3	+80.0	-81.3	+75.1	-75.1	+59.5	-59.5	+58.4	-58.4	+56.2	-56.2	+41.9	-41.9
	B, D, F, H, J	+80.0	-85.0	+80.0	-120.0	+80.0	-120.0	+80.0	-120.0	+80.0	-117.9	+80.0	-116.6	+80.0	-99.9	+80.0	-83.7
	C,E,I	+80.0	-85.0	+80.0	-93.1	+80.0	-91.0	+80.0	-85.1	+59.5	-59.5	+58.4	-58.4	+56.2	-56.2	+41.9	-41.9
	G	+80.0	-85.0	+80.0	-120.0	+80.0	-109.8	+80.0	-101.4	+80.0	-96.7	+80.0	-94.8	+80.0	-91.3	+68.1	-68.1
48	A	+80.0	-111.9	+80.0	-88.8	+73.3	-73.3	+67.2	-67.2	+51.4	-51.4	+49.6	-49.6	+49.0	-49.0	+40.8	-40.8
	B, D, F, H, J	+80.0	-120.0	+80.0	-120.0	+80.0	-120.0	+80.0	-120.0	+80.0	-101.2	+80.0	-98.4	+80.0	-98.0	+80.0	-81.5
	C,E,I	+80.0	-109.0	+80.0	-82.2	+80.0	-81.2	+75.0	-75.0	+51.4	-51.4	+49.6	-49.6	+49.0	-49.0	+40.8	-40.8
	G	+80.0	-120.0	+80.0	-110.2	+80.0	-96.9	+80.0	-88.6	+80.0	-83.5	+80.0	-80.6	+79.6	-79.6	+66.3	-66.3
53 1/8	A	+80.0	-99.0	+80.0	-81.8	+64.4	-64.4	+58.9	-58.9	+43.7	-43.7	+41.6	-41.6	+40.4	-40.4	+40.0	-40.0
	B, D, F, H, J	+80.0	-120.0	+80.0	-120.0	+80.0	-114.8	+80.0	-103.5	+80.0	-85.6	+80.0	-81.9	+80.0	-80.2	+80.0	-80.0
	C,E,I	+80.0	-99.0	+72.3	-72.3	+70.8	-70.8	+64.5	-64.5	+43.7	-43.7	+41.6	-41.6	+40.4	-40.4	+40.0	-40.0
	G	+80.0	-117.0	+80.0	-96.7	+80.0	-84.3	+76.3	-76.3	+71.0	-71.0	+67.6	-67.6	+65.7	-65.7	+65.0	-65.0

GLASS TYPES:

A. 3/16" ANNEALED
B. 3/16" TEMPERED
C. 1/4" ANNEALED
D. 1/4" TEMPERED
E. 13/16" I.G., 1/8" ANNEALED, AIR SPACE, 1/8" ANNEALED
F. 13/16" I.G., 1/8" TEMPERED, AIR SPACE, 1/8" TEMPERED
G. 13/16" I.G., 3/16" ANNEALED, AIR SPACE, 3/16" ANNEALED
H. 13/16" I.G., 3/16" TEMPERED, AIR SPACE, 3/16" TEMPERED
I. 13/16" I.G., 3/16" ANNEALED, AIR SPACE, 1/8" ANNEALED
J. 13/16" I.G., 3/16" TEMPERED, AIR SPACE, 1/8" TEMPERED

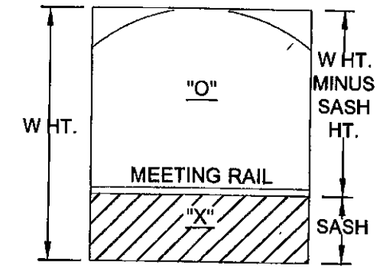

NOTES:

1. WINDOWS WITH THE LOW SILL OPTION ARE LIMITED TO A POSITIVE DESIGN PRESSURE OF +64.0 PSF OR LOWER AS SHOWN IN THE TABLE. NEGATIVE DESIGN PRESSURES ARE UNEFFECTED.
2. AVAILABLE SASH HEIGHTS FOR CUSTOM WINDOWS ARE 12 5/8" MIN. TO 38" MAX.
3. 76" MAX. FLANGE WINDOW HT. 75" MAX. FIN WINDOW HT.

PRODUCT RENEWED
as complying with the Florida Building Code
Acceptance No. 10-1101.03
Expiration Date JAN. 26, 2016
By
Miami/Dade Product Control Division

PRODUCT REVISED
as complying with the Florida Building Code
Acceptance No. 06-1211.07
Expiration Date 01/26/11
By
Miami/Dade Product Control Division

2/27/07
Robert L. Clark, P.E.
PE #39712
Structural

Revsd By:	Date:	Revisions:	
F.K.	2/16/07	C	NO CHANGE THIS SHEET
F.K.	2/6/07	B	NO CHANGE THIS SHEET
F.K.	11/27/06	A	REDUCE MAX. NEG. DP TO FACILITATE ANCHORAGE, REVISE CUSTOM FORMAT DESIGN PRESSURES AND ADD FIN.
Drawn By: F.K.	Date: 7/4/05	Checked By: J.J.	Date: 9/21/05

1070 TECHNOLOGY DRIVE
NOKOMIS, FL 34275
P.O. BOX 1529
NOKOMIS, FL 34274

PGT Visibly Better

Description: DESIGN PRESSURES, CUSTOM (W. HT. -S. HT.)
Title: ALUM. SINGLE HUNG WINDOW, NON-IMPACT

Series/Model:	Scale:	Sheet:	Drawing No.	Rev:
SH600	NTS	5 of 14	4032-20	C

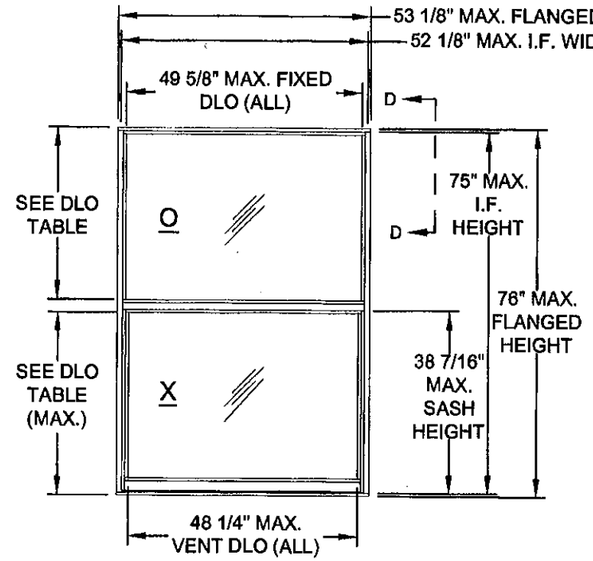

DETAIL A
1/1

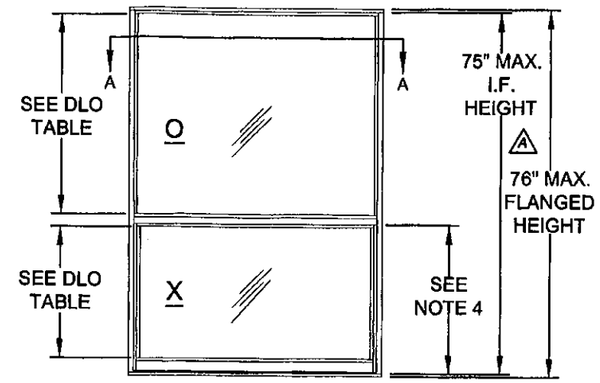

DETAIL B
VIEW (STANDARD SASH)

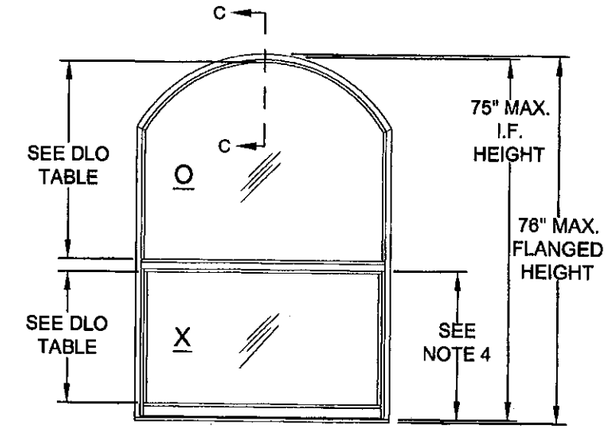

DETAIL C
RADIUS TOP (STANDARD SASH)

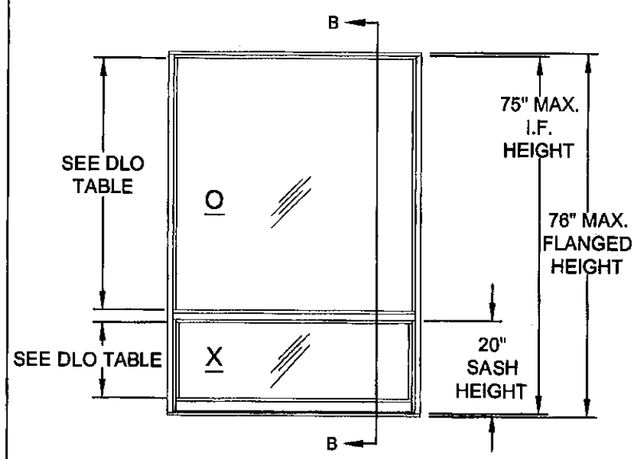

DETAIL D
VIEW (CUSTOM SASH)

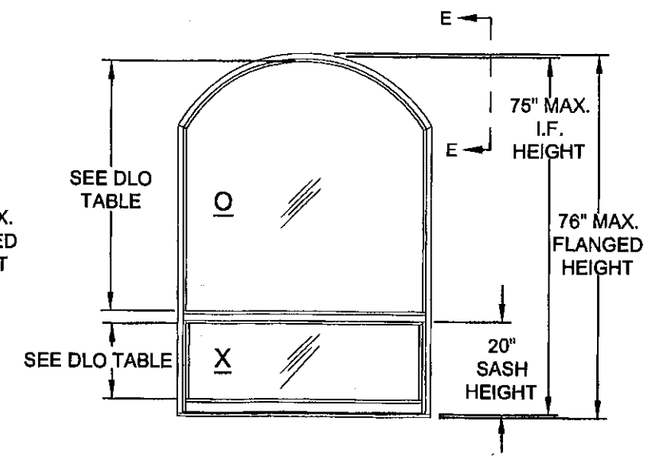

DETAIL E
RADIUS TOP (CUSTOM SASH)

VERTICAL DAYLIGHT OPENING		
FIXED LITE		
DETAIL	LOW SILL	HIGH SILL
A	34 1/2"	34 3/16"
B	41 5/8"	41 1/4"
C	41 1/4"	40 7/8"
D	52 5/8"	52 11/16"
E	52 1/4"	52 5/16"
SASH		
DETAIL	LOW SILL	HIGH SILL
A	34 1/2"	34 3/16"
B	27 7/16"	27 1/8"
C	27 7/16"	27 1/8"
D	16 3/8"	15 3/4"
E	16 3/8"	15 3/4"

TABLE 4.

PRODUCT RENEWED
as complying with the Florida Building Code
Acceptance No. 10-1101.03
Expiration Date JAN. 26, 2016
By Manuel Perez
Miami Dade Product Control Division

PRODUCT REVISED
as complying with the Florida Building Code
Acceptance No. 06-1211.07
Expiration Date 01/26/11
By
Miami Dade Product Control Division

NOTES:

1. SEE SHEET 7 FOR VERTICAL AND HORIZONTAL SECTION DETAILS.
2. SEE SHEET 9 FOR CORNER DETAIL VIEWS.
3. SEE SHEETS 10 THROUGH 14 FOR ANCHORAGE INFORMATION.
4. SASH HEIGHTS FOR STANDARD SASH WINDOWS (DETAILS B & C) ARE BASED ON A THREE OVER TWO FORMAT.

Revsd By:	Date:	Revisions:	
F.K.	2/16/07	C	NO CHANGE THIS SHEET
F.K.	2/6/07	B	NO CHANGE THIS SHEET
F.K.	11/27/06	A	ADD INTEGRAL FIN (I.F.) VERSION, CHG. NOTE 4.
Drawn By: F.K.	Date: 7/4/05	Checked By: J.J.	Date: 9/21/05

1070 TECHNOLOGY DRIVE
NOKOMIS, FL 34275

P.O. BOX 1529
NOKOMIS, FL 34274

PGT
Visibly Better

Description: ELEVATIONS

Title: ALUM. SINGLE HUNG WINDOW, NON-IMPACT

Series/Model:	Scale:	Sheet:	Drawing No.	Rev:
SH600	NTS	6 of 14	4032-20	C

2/27/07

Robert L. Clark, P.E.
PE #39712
Structural

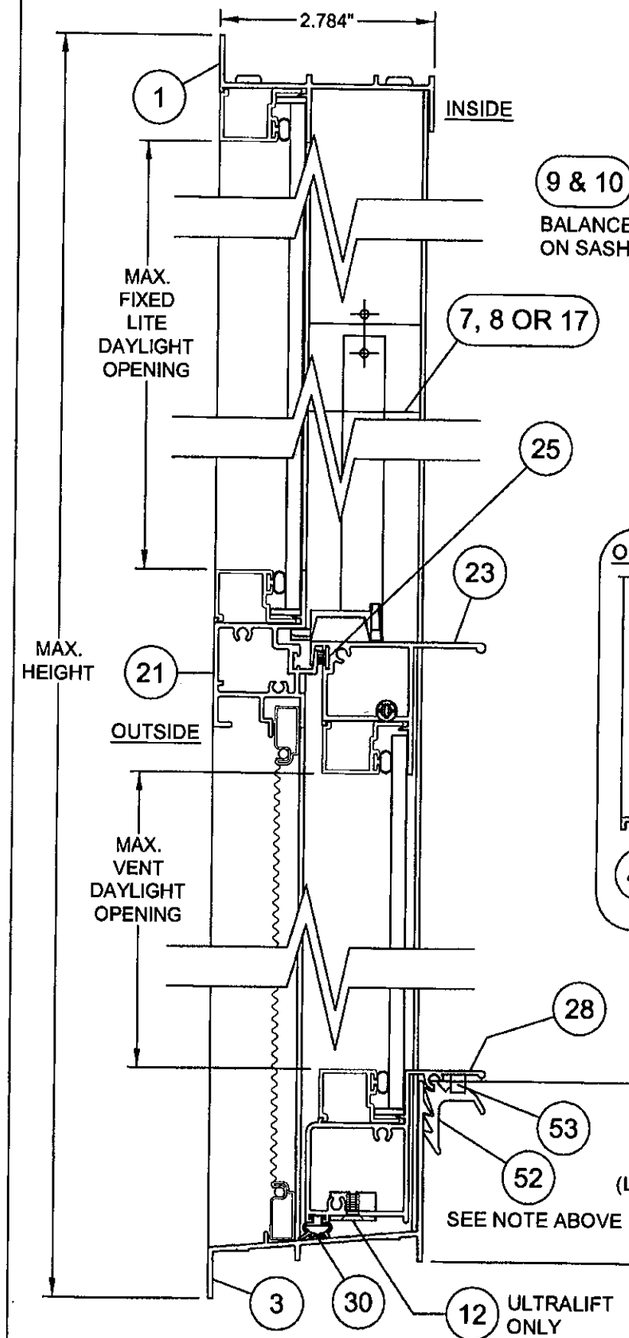

SECTION B-B
(LOW SILL SHOWN)

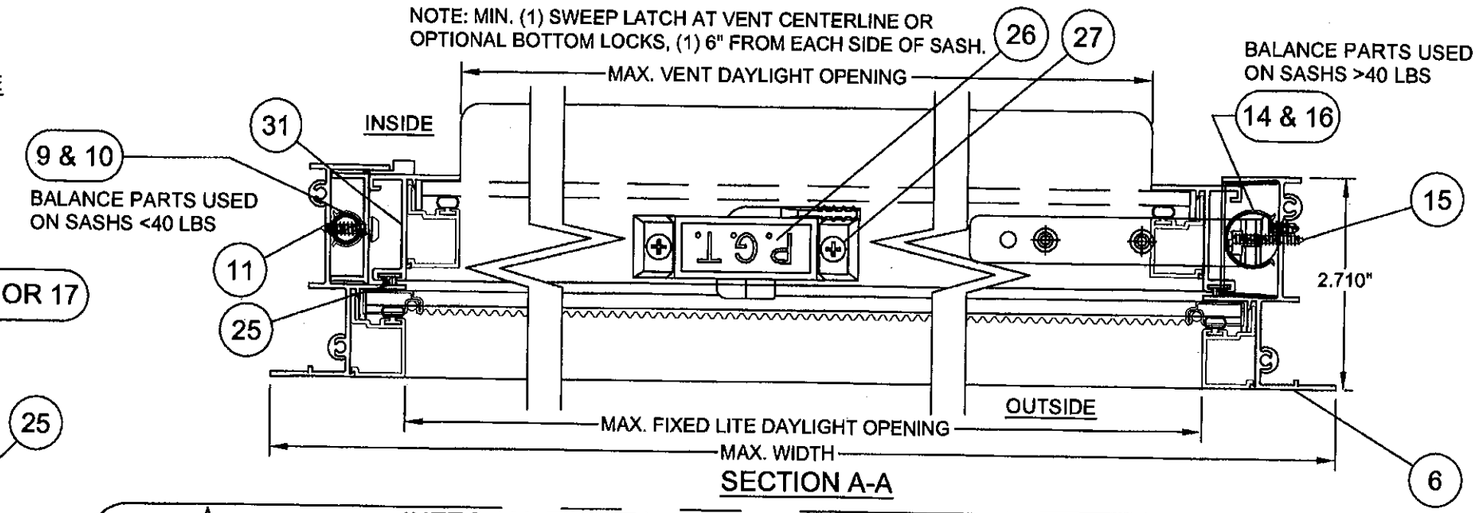

SECTION A-A

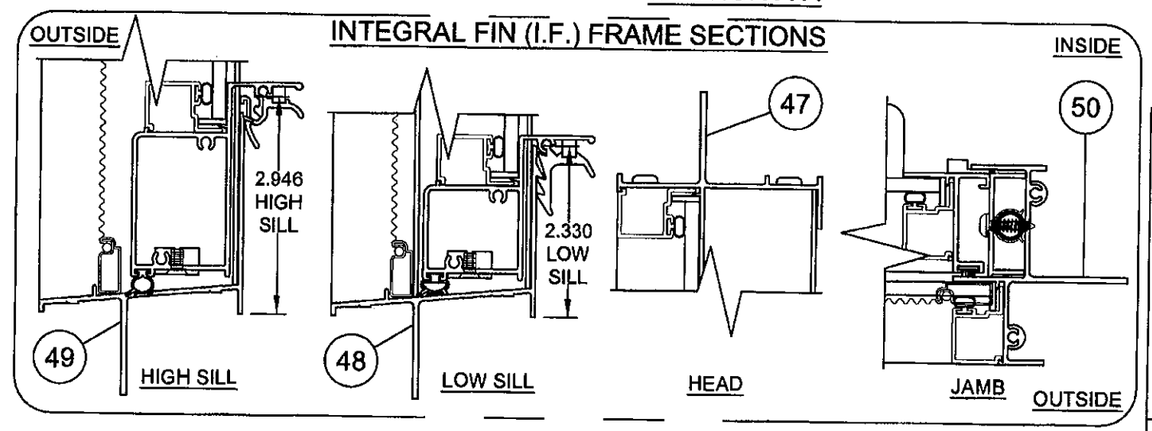

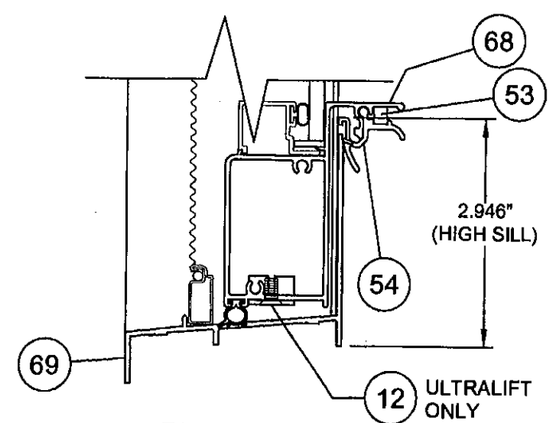

ALTERNATE HIGH SILL

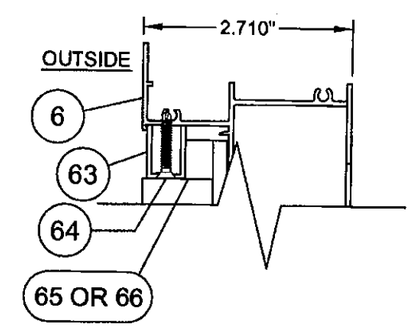

SECTION C-C
RADIUS TOP
(HEAD DETAIL - FLANGED VERSION)

PRODUCT RENEWED
as complying with the Florida Building Code
Acceptance No. D6-1211.07
Expiration Date 01/26/11
By
Miami-Dade Product Control Division

PRODUCT RENEWED
as complying with the Florida Building Code
Acceptance No. D6-1211.03
Expiration Date JAN. 26, 2016
By
Miami-Dade Product Control Division

Revised By:	Date:	Revisions:	
F.K.	2/16/07	C	NO CHANGE THIS SHEET
F.K.	2/6/07	B	NO CHANGE THIS SHEET
F.K.	11/27/06	A	ADD I.F. SECTIONS. MOVE SWEEP LATCH NOTE
Drawn By: F.K.	Date: 7/4/05	Checked By: J.J.	Date: 9/21/05

1070 TECHNOLOGY DRIVE
NOKOMIS, FL 34275

P.O. BOX 1529
NOKOMIS, FL 34274

PGT
Visibly Better

Description: SECTIONS

Title: ALUM. SINGLE HUNG WINDOW, NON-IMPACT

Series/Model:	Scale:	Sheet:	Drawing No.	Rev:
SH600	Half	7 of 14	4032-20	C

2/27/07

Robert L. Clark, P.E.
PE #39712
Structural

ITEM	DWG. #	DESCRIPTION	PGT#
1	4002A	FLANGE FRAME HEAD	612225
2	1155	#8 X 1.000 QUAD PN. SMS	781PQA
3	4003C	FLANGE FRAME SILL (LOW SILL)	612226
5	1626	ADHESIVE OPEN CELL FOAM PAD	7PAD1626
6	4004	FLANGE FRAME JAMB	612227
7	4025	SASH STOP (ALUMA-TILT)	612244
8	4025	SASH STOP (EGRESS) 1.125 LONG	612244
9	4029	CALDWELL ALUMA-TILT BALANCE, 5/8"	
10	1080	BAL. COVER, RIGID VINYL, 5/8"	6BALCVR916
11		#8 X .750 PH. PN. SMS	7834AA
12		BALANCE BOTTOM BRACKET	7BALTBKT
13	1085	SASH TOP GUIDE, 5/8" BAL.	42504
14	4029-1	CALDWELL ULTRA-LIFT BALANCE, .670"	
15		#8 X 1 PHILLIPS FLAT HEAD S. STL	78X1FPAX
16	1080-1	.670 ULTRA-LIFT BALANCE COVER	6BALCVR670
17	4053	SASH STOP (ULTRA-LIFT)	64053
18	4029-1	SASH BRACKET	7ULBRKT
19		#8-32 X 1/2" LG. PH. FH. TYPE F S. STL	7832X12FPFX
20	1086	SASH TOP GUIDE, 11/16" BAL.	42505R & L
21	4054C	FIXED MEETING RAIL	64054C
23	4006C	SASH TOP RAIL	64006
25	1235	WSTP.,.170 X .270 BACK, FIN SEAL	67S16G
26	1096	SWEEP LATCH	71096
27	1016	#8 X .625 PH. FL. SMS	7858
28	4007	SASH BOTTOM RAIL (LOW SILL)	612230
30	1226	WSTP., BULB VINYL	6TP249
31	4008	SASH SIDE RAIL	612231
34	1268	SASH FACE GUIDE	42501
37	1224	VINYL GLAZ. BEAD BULB (THICK)	6TP247W,K
38	1225	VINYL GLAZ. BEAD BULB (THIN)	6TP248K
39	4014B	GLAZING BEAD, 3/16 & 1/4. W/O GK.	64014
40	4046A	GLAZING BEAD, 3/16 & 1/4. W/ GRILL KIT	644842
46	4067	GLAZING BEAD, 13/16" I.G.	64067
47	4071A	FRAME, I.F. HEAD	64071
48	4072A	FRAME, I.F. LOW SILL	64072
49	4073A	FRAME, I.F. HIGH SILL	64073
50	4074B	FRAME, I.F. JAMB	64074
52	4009	SILL LATCH (EGRESS) (LOW SILL)	764009
53	1088	SPRING, SILL LATCH (EGRESS)	7SPRNG
54	2740	SILL LATCH (EGRESS) (HIGH SILL)	62740
55	1014	SCREEN FRAME (HOR. & VER.)	61014
56	1630	SCREEN CORNER KEY W/RINGS	71630
57	1631	SCREEN CORNER KEY W/OUT RINGS	71631
58	1073	SCREEN SPRING	7CASP
59	1624	SCREEN SPLINE - .135 DIA. FOAM	61624K
60	1635	SCREEN SPLINE - .135 DIA. HARD	61635K
61		SCREEN CLOTH	61816
63	505	GLAZING CHANNEL (.688 X .500)	6533402

ITEM	DWG. #	DESCRIPTION	PGT#
64	1161	#6 X 1.000 PH. BUGLE TEK	706X1
65		FOAM TAPE 1/4 X 1/2 - FOR 3/16	61412K
66	1208	FOAM TAPE 1/8 X 1/2 - FOR 1/4	61308K
68	4051A	SASH BOTTOM RAIL (HIGH SILL)	64051
69	5050A	FLANGE FRAME SILL (HIGH SILL)	64050
70		SILICONE, DOW 899, 995 OR EQUIV.	
80	A. GLASS, 3/16" ANNEALED		
81	B. GLASS, 3/16" TEMPERED		
82	C. GLASS, 1/4" ANNEALED		
83	D. GLASS, 1/4" TEMPERED		
86	E. GLASS, 13/16" IG; 1/8" ANNEALED, AIR SPACE, 1/8" ANNEALED		
87	F. GLASS, 13/16" IG; 1/8" TEMPERED, AIR SPACE, 1/8" TEMPERED		
88	G. GLASS, 13/16" IG; 3/16" ANNEALED, AIR SPACE, 3/16" ANNEALED		
89	H. GLASS, 13/16" IG; 3/16" TEMPERED, AIR SPACE, 3/16" TEMPERED		
90	I. GLASS, 13/16" IG; 3/16" ANNEALED, AIR SPACE, 1/8" ANNEALED		
91	J. GLASS, 13/16" IG; 3/16" TEMPERED, AIR SPACE, 1/8" TEMPERED		

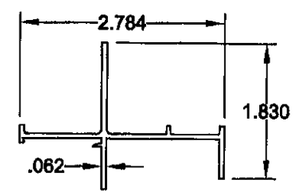

47 FRAME, I.F. HEAD
#4071A, 6063-T6

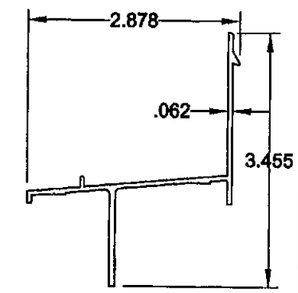

48 FRAME, I.F. LOW SILL
#4072A, 6063-T6

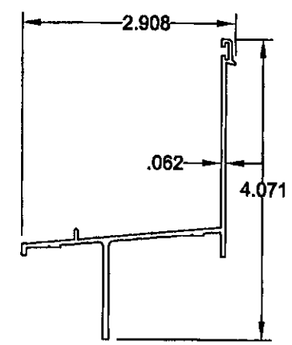

49 FRAME, I.F. HIGH SILL
#4073A, 6063-T6

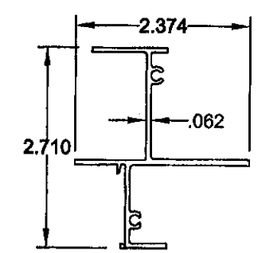

50 FRAME, I.F. JAMB
#4074B, 6063-T6

PRODUCT RENEWED
as complying with the Florida Building Code
Acceptance No. 10-1101.03
Expiration Date JAN. 26, 2016
By
Miami Dade Product Control Division

PRODUCT REVISED
as complying with the Florida Building Code
Acceptance No. 06-1211.07
Expiration Date 01/26/11
By
Miami Dade Product Control Division

2/27/07
Robert L. Clark, P.E.
PE #39712
Structural

Revised By:	Date:	Revisions:	
F.K.	2/16/07	C	NO CHANGE THIS SHEET
F.K.	2/6/07	B	NO CHANGE THIS SHEET
F.K.	11/27/06	A	ADD I.F. EXTRUSIONS, ITEMS 47-50 AND UPGRADE ITEM 21 ALLOY
Drawn By: F.K.	Date: 7/4/05	Checked By: J.J.	Date: 9/21/05

1070 TECHNOLOGY DRIVE
NOKOMIS, FL 34275

P.O. BOX 1529
NOKOMIS, FL 34274

PGT
Visibly Better

Description: PARTS LIST AND FRAME CORNER DETAILS

Title: ALUM. SINGLE HUNG WINDOW, NON-IMPACT

Series/Model:	Scale:	Sheet:	Drawing No.	Rev:
SH600	NTS	8 of 14	4032-20	C

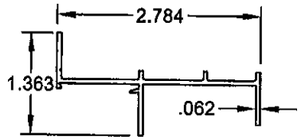

1 FLANGE FRAME HEAD
#4002A, 6063-T6

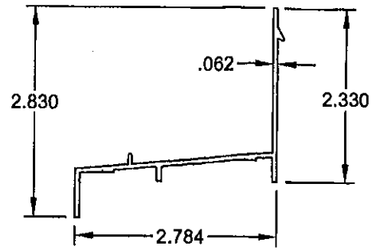

3 FLANGE FRAME SILL (LOW)
#4003C, 6063-T6

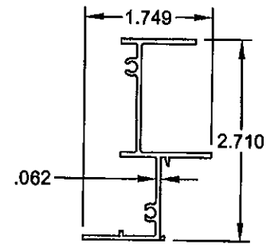

6 FLANGE FRAME JAMB
#4004, 6063-T5
(USED AS RADIUS TOP HEAD)

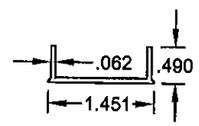

7 SASH STOP
#4025, 6063-T5

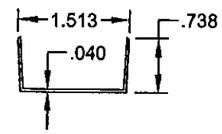

17 SASH STOP COVER
#4053, 6063-T5

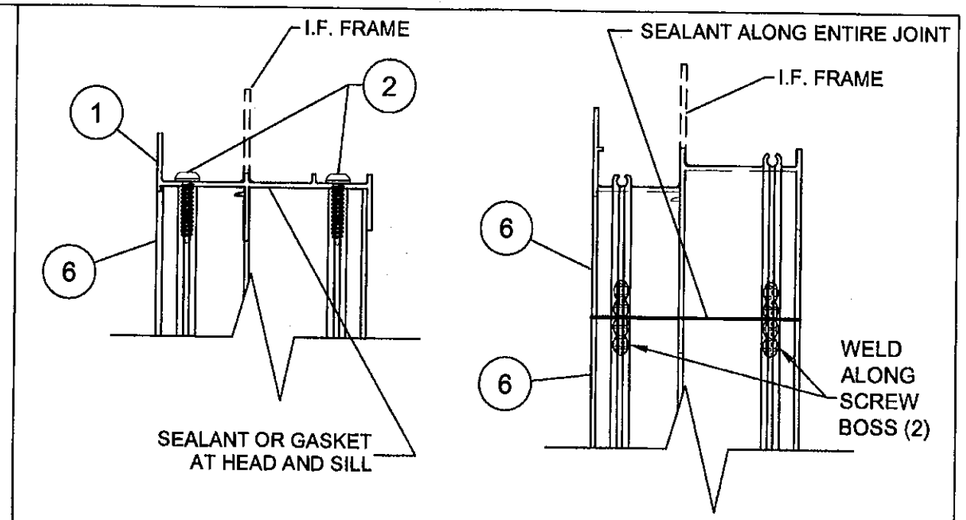

VIEW D-D
(1/1 & VIEW HEAD & SILL, RADIUS TOP SILL)

VIEW E-E
(RADIUS TOP HEAD)

FRAME CORNER CONSTRUCTION

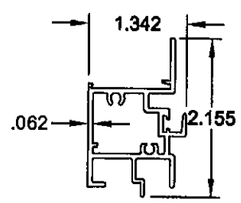

21 FIXED MEETING RAIL
#4054C, 6063HD-T6 A

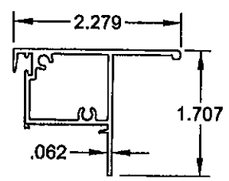

23 SASH TOP RAIL
#4006C, 6063HS-T6

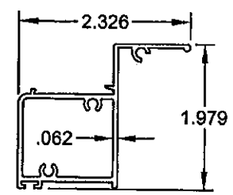

28 SASH BOTTOM RAIL (LOW)
#4007, 6063-T5

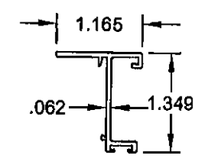

31 SASH SIDE RAIL
#4008, 6063-T5

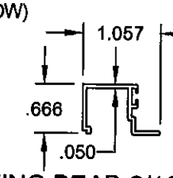

39 GLAZING BEAD 3/16" OR 1/4"
#4014B, 6063-T5

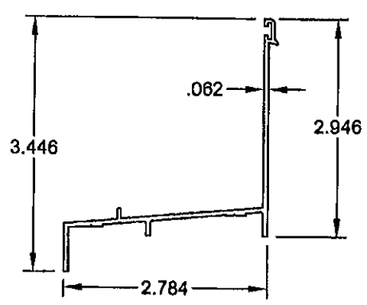

69 FLANGE FRAME SILL (HIGH)
#4050A, 6063-T6

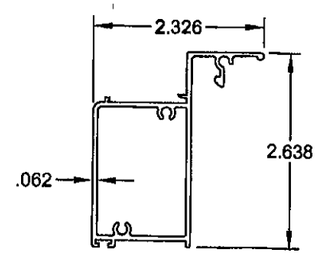

68 SASH BOTTOM RAIL (HIGH)
#4051A, 6063-T5

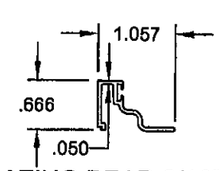

40 GLAZING BEAD 3/16" OR 1/4"
#4046A, 6063-T5
(USED W/ GRILL KIT)

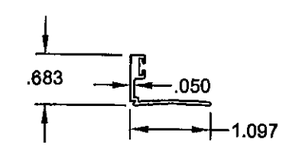

46 GLAZING BEAD 13/16" IG
#4067, 6063-T5

PRODUCT RENEWED
as complying with the Florida
Building Code
Acceptance No. 10-1101.03
Expiration Date JAN 26, 2016
By
Miami Dade Product Control
Division

PRODUCT REVISED
as complying with the Florida
Building Code
Acceptance No. 06-1211.07
Expiration Date 01/26/11
By
Miami Dade Product Control
Division

Revsd By:	Date:	Revisions:	
F.K.	2/16/07	C	NO CHANGE THIS SHEET
F.K.	2/6/07	B	NO CHANGE THIS SHEET
F.K.	11/27/06	A	UPDATE FRAME CORNER ASSEMBLY TO INCLUDE I.F. UPGRADE ITEM 21 ALLOY.
Drawn By: F.K.	Date: 7/4/05	Checked By: J.J.	Date: 9/21/05

1070 TECHNOLOGY DRIVE
NOKOMIS, FL 34275

P.O. BOX 1529
NOKOMIS, FL 34274

PGT
Visibly Better

Description: EXTRUSIONS

Title: ALUM. SINGLE HUNG WINDOW, NON-IMPACT

Series/Model:	Scale:	Sheet:	Drawing No.	Rev:
SH600	Half	9 of 14	4032-20	C

2/27/07

Robert L. Clark, P.E.
PE #39712
Structural

ANCHOR QUANTITIES FOR 1/1 FLANGED WINDOWS

TABLE 5.

WINDOW WIDTH	GLASS TYPE	WINDOW HEIGHT 28.603			34.603			40.603			46.603			52.603			58.603			64.603			76.000		
SUBSTRATE:		2,3 WOOD	2 CONC	1 CONC	2,3 WOOD	2 CONC	1 CONC	2,3 WOOD	2 CONC	1 CONC	2,3 WOOD	2 CONC	1 CONC	2,3 WOOD	2 CONC	1 CONC	2,3 WOOD	2 CONC	1 CONC	2,3 WOOD	2 CONC	1 CONC	2,3 WOOD	2 CONC	1 CONC
ANCHOR TYPE:																									
19.125	B,D,F,G, H,J	1	1	1	1	1	1	1	1	1	1	1	1	1	1	1	1	1	1	1	1	1	1	1	1
		1 2	1 2	1 2	2 2	1 2	2 2	2 2	2 2	2 2	2 3	2 2	2 2	2 3	2 2	2 3	2 3	2 2	3 3	3 3	2 2	3 3	3 4	3 3	3 3
	A,C,E,I	1	1	1	1	1	1	1	1	1	1	1	1	1	1	1	1	1	1	1	1	1	1	1	1
		1 2	1 2	1 2	2 2	1 2	2 2	2 2	2 2	2 2	2 3	2 2	2 2	2 2	2 2	2 2	2 2	2 2	2 2	2 2	2 2	2 2	2 3	2 2	2 2
24.000	B,D,F,G, H,J	1	1	1	1	1	1	1	1	1	1	1	1	1	1	1	1	1	1	1	1	1	1	1	1
		1 2	1 2	2 2	2 3	1 2	2 2	2 3	2 2	2 3	3 3	2 2	3 3	3 4	2 2	3 3	3 4	2 2	3 3	3 4	2 2	3 3	4 4	3 3	4 3
	A,C,E,I	1	1	1	1	1	1	1	1	1	1	1	1	1	1	1	1	1	1	1	1	1	1	1	1
		1 2	1 2	2 2	2 3	1 2	2 2	2 3	2 2	2 3	3 3	2 2	3 3	2 2	2 2	2 2	2 2	2 2	2 2	2 2	2 2	2 2	2 3	2 2	2 3
32.000	PSF	***119***		***119***																					
	B,D,F,G, H,J	**2**	1	**1**	2	1	2	2	1	2	2	1	2	2	1	2	2	1	2	2	1	2	2	1	2
		2 2	2 2	**2 2**	2 3	2 2	2 3	2 3	2 3	2 3	3 4	2 3	3 3	3 5	2 3	3 4	3 4	3 3	3 4	3 4	3 3	3 4	4 5	3 3	4 4
	A,C,E,I	**1**	1	**1**	1	1	1	1	1	1	1	1	1	1	1	1	1	1	1	1	1	1	1	1	1
		2 2	2 2	**2 2**	2 3	2 2	2 3	2 3	2 3	2 3	3 4	2 3	3 3	2 3	2 2	2 3	2 3	2 2	2 2	2 3	2 2	3 2	2 3	2 2	3 3
37.000	PSF	***103***		***117***	***119***																				
	B,D,F,G, H,J	**2**	1	**2**	**2**	1	2	2	1	2	2	2	2	2	2	2	2	2	2	2	1	2	2	1	2
		2 2	2 2	**2 2**	**2 3**	2 3	3 3	3 4	2 3	3 4	3 4	2 3	3 4	3 5	2 3	3 4	3 5	3 3	4 4	4 5	3 3	4 4	4 5	3 4	4 4
	A,C,E,I	**2**	1	**2**	**2**	1	2	2	1	2	2	2	2	2	1	2	2	1	1	1	1	1	1	1	1
		2 2	2 2	**2 2**	**2 3**	2 3	3 3	3 4	2 3	3 4	3 4	2 3	3 4	2 3	2 3	2 3	2 3	2 2	2 3	2 3	2 2	3 3	3 4	2 2	3 3
40.000	PSF	***95***		***108***	***120***		***119***																		
	B,D,F,G, H,J	**2**	2	**2**	**2**	2	**2**	2	2	2	2	2	2	3	2	2	2	2	2	2	2	2	2	2	2
		2 2	2 2	**2 2**	**3 3**	2 3	**3 3**	3 4	2 3	3 4	3 5	3 3	3 4	3 5	3 3	4 5	3 5	3 3	4 5	4 5	3 3	4 5	4 6	3 4	4 5
	A,C,E,I	**2**	2	**2**	**2**	2	**2**	2	2	2	2	2	2	2	2	2	2	2	2	2	2	2	2	2	2
		2 2	2 2	**2 2**	**3 3**	2 3	**3 3**	3 4	2 3	3 4	3 4	2 3	3 4	2 4	2 3	3 3	2 3	2 2	2 3	2 3	2 2	3 3	3 4	2 2	3 3
44.000	PSF	***87***		***99***	***109***		***119***																		
	B,D,F,G, H,J	**2**	2	**2**	**2**	2	**2**	3	2	2	3	2	2	3	2	3	3	2	2	3	2	2	3	2	2
		2 2	2 2	**2 2**	**3 3**	2 3	**3 3**	3 4	3 3	3 4	3 5	3 3	4 4	4 6	3 4	4 5	3 5	3 3	4 5	4 5	3 3	4 5	4 6	4 4	5 5
	A,C,E,I	**2**	2	**2**	**2**	2	**2**	2	2	2	2	2	2	2	2	2	2	2	2	2	2	2	2	2	2
		2 2	2 2	**2 2**	**2 3**	2 3	**3 3**	3 4	2 3	3 4	3 4	2 3	3 4	3 4	2 3	3 3	2 3	2 3	2 3	2 4	2 3	3 3	3 4	2 3	3 4
48.000	PSF	***79***	***119***	***90***	***100***		***113***	***114***			***119***														
	B,D,F,G, H,J	**2**	**2**	**2**	**2**	2	**2**	**3**	2	2	**3**	2	3	3	2	3	3	2	3	3	2	3	3	2	3
		2 2	**2 2**	**2 2**	**3 3**	2 3	**3 3**	**3 4**	3 3	3 4	**4 5**	3 4	4 5	4 6	3 4	4 5	4 6	3 4	4 5	4 6	3 4	4 5	5 7	4 4	5 6
	A,C,E,I	**2**	**2**	**2**	**2**	2	**2**	2	2	2	2	2	2	2	2	2	2	2	2	2	2	2	2	2	2
		2 2	**2 2**	**2 2**	**2 3**	2 3	**2 3**	3 4	2 3	3 4	3 4	2 3	3 4	3 4	2 3	3 3	2 4	2 3	3 3	2 4	2 3	3 3	3 4	2 3	3 4
53.125	PSF	***72***	***118***	***82***	***90***		***103***	***103***		***118***	***113***														
	B,D,F,G, H,J	**2**	**2**	**2**	3	2	**2**	**3**	2	**3**	**3**	2	3	3	2	3	3	2	3	3	2	3	3	2	3
		2 2	**2 2**	**2 2**	**3 3**	2 3	**3 3**	**3 4**	3 4	**3 4**	**3 5**	3 4	4 5	4 6	3 4	4 5	4 6	3 4	4 5	4 6	3 4	5 6	5 7	4 5	5 6
	A,C,E,I	**2**	**2**	**2**	**2**	2	2	2	2	2	2	2	2	2	2	2	2	2	2	2	2	2	2	2	2
		2 2	**2 2**	**2 2**	**2 3**	2 3	2 3	2 4	2 3	3 4	3 4	2 3	3 4	3 4	2 3	3 3	3 4	2 3	3 3	3 4	2 3	3 4	3 5	2 3	3 4

ANCHORAGE NOTES:

1. ANCHOR TYPES: 1 - 1/4" ELCO TAPCONS
   2 - 1/4" ELCO SS4 CRETE-FLEX
   3 - #12 SCREWS
2. ANCHOR LOCATIONS ARE BASED ON THE FOLLOWIING DIMENSIONS.
   HEAD - 18 1/2" MAX. FROM TOP CORNERS
   JAMBS - 17 1/2" MAX. FROM TOP CORNERS
   15" MAX. FROM BOTTOM CORNERS
   6" MAX. BELOW MTG. RAIL
   SILL - ANCHORS NOT REQUIRED
3. INSTALL PER THE ADJACENT TABLE ANCHOR QUANTITIES USING THE DIMENSIONAL CRITERIA OF NOTE 2.
4. DESIGN PRESSURE LIMITATIONS:
   SIZE BLOCKS OF THE ADJACENT TABLE WITH A BOLD ITALICIZED VALUE ABOVE THEM, INDICATE A MAXIMUM DESIGN PRESSURE WITH THE QUANTITY OF ANCHORS SHOWN IN BOLD, DUE TO ANCHOR SPACING LIMITATIONS. OTHERWISE, THE MAXIMUM DESIGN PRESSURE FOR THE RESPECTIVE SIZE AND GLASS TYPE IS AVAILABLE.

TABLE KEY:

(DP LIMITED)

MAX. PSF ***118***
HEAD **2**
JAMB ABOVE **2 3**
MTG. RAIL
JAMB BELOW
MTG. RAIL

(FULL DP)

HEAD 2
JAMB ABOVE 2 3
MTG. RAIL
JAMB BELOW
MTG. RAIL

PRODUCT RENEWED
as complying with the Florida Building Code
Acceptance No. 10-1101.03
Expiration Date JAN. 26, 2016
By Manuel Perez
Miami Dade Product Control Division

PRODUCT REVISED
as complying with the Florida Building Code
Acceptance No. 06-1211.07
Expiration Date 01/26/11
By
Miami Dade Product Control Division

2/27/07
Robert L. Clark, P.E.
PE #39712
Structural

Revsd By:	Date:	Revisions:	
F.K.	2/16/07	C	NO CHANGE THIS SHEET
F.K.	2/6/07	B	BOLD & ITALICIZE DP LIMITED SIZES AND MOD. NOTE 4
F.K.	11/27/06	A	REVISE ANCHORAGE TABLE AND NOTES. ADD DP MAX. WHERE ANCHOR QTY IS RESTRICTED BY SIZE.
Drawn By: F.K.	Date: 7/4/05	Checked By: J.J.	Date: 9/21/05

1070 TECHNOLOGY DRIVE
NOKOMIS, FL 34275

P.O. BOX 1529
NOKOMIS, FL 34274

PGT Visibly Better

Description: ANCHORAGE SPACING, 1/1 WINDOWS
Title: ALUM. SINGLE HUNG WINDOW, NON-IMPACT
Series/Model: SH600 | Scale: NTS | Sheet: 10 of 14 | Drawing No. 4032-20 | Rev: C

ANCHOR QUANTITIES FOR STANDARD VIEW AND RADIUS TOP FLANGED WINDOWS

TABLE 6.

WINDOW WIDTH	GLASS TYPE	WINDOW HEIGHT 29.655			37.155			44.655			52.155			59.655			67.155			74.655			76.000		
SUBSTRATE:		2,3 WOOD	2 CONC	1 CONC	2,3 WOOD	2 CONC	1 CONC	2,3 WOOD	2 CONC	1 CONC	2,3 WOOD	2 CONC	1 CONC	2,3 WOOD	2 CONC	1 CONC	2,3 WOOD	2 CONC	1 CONC	2,3 WOOD	2 CONC	1 CONC	2,3 WOOD	2 CONC	1 CONC
ANCHOR TYPE:																									
19.125	PSF	***113***		***119***																					
	B, D, F, H, J	1	1	1	1	1	1	1	1	1	1	1	1	1	1	1	1	1	1	1	1	1	1	1	1
		1 1	1 1	1 1	2 2	2 2	2 2	2 2	2 2	2 2	3 2	2 2	3 2	3 3	2 2	3 2	3 3	2 2	3 2	3 3	3 2	3 3	3 3	3 2	3 2
	A,C,E, G,I	1	1	1	1	1	1	1	1	1	1	1	1	1	1	1	1	1	1	1	1	1	1	1	1
		1 1	1 1	1 1	2 2	2 2	2 2	2 2	2 2	2 2	3 2	2 2	3 2	2 2	2 2	3 2	2 2	2 2	2 2	2 2	2 2	2 2	2 2	2 2	2 2
24.000	PSF	***90***	***119***	***103***	***119***																				
	B, D, F, H, J	1	1	1	1	1	1	1	1	1	1	1	1	1	1	1	1	1	1	1	1	1	1	1	1
		1 1	1 1	1 1	2 2	2 2	2 2	3 3	2 2	3 2	3 3	2 2	3 3	4 3	3 2	4 3	3 3	3 2	4 3	3 3	3 2	4 3	3 3	3 2	3 3
	A,C,E, G,I	1	1	1	1	1	1	1	1	1	1	1	1	1	1	1	1	1	1	1	1	1	1	1	1
		1 1	1 1	1 1	2 2	2 2	2 2	3 3	2 2	3 2	3 3	2 2	3 3	2 2	2 2	3 2	2 2	2 2	2 2	2 2	2 2	2 2	2 2	2 2	2 2
32.000	PSF	***68***	***111***	***77***	***111***		***119***																		
	B, D, F, H, J	2	1	2	2	1	2	2	1	2	2	1	2	2	1	2	2	1	2	2	1	1	2	1	1
		1 1	1 1	1 1	2 2	2 2	2 2	3 3	2 3	3 3	4 3	3 3	4 3	4 4	3 3	5 4	4 4	3 2	4 3	4 4	3 2	4 3	4 4	3 2	4 3
	A,C,E, G,I	2	1	2	2	1	2	2	1	2	2	1	2	2	1	1	1	1	1	1	1	1	1	1	1
		1 1	1 1	1 1	2 2	2 2	2 2	3 3	2 3	3 3	4 3	3 3	4 3	3 3	3 2	3 3	2 2	2 2	2 2	2 2	2 2	2 2	2 2	2 2	2 2
37.000	PSF	***59***	***96***	***67***	***96***		***109***	***119***																	
	B, D, F, H, J	2	1	2	2	2	2	2	2	2	2	2	2	3	2	2	2	1	2	2	1	2	2	1	2
		1 1	1 1	1 1	2 2	2 2	2 2	3 3	2 3	3 3	4 4	3 3	4 4	4 5	4 3	5 4	4 4	3 3	5 3	4 4	4 3	5 4	4 4	3 3	5 4
	A,C,E, G,I	2	1	2	2	2	2	2	2	2	2	2	2	2	1	2	1	1	1	1	1	1	1	1	1
		1 1	1 1	1 1	2 2	2 2	2 2	3 3	2 3	3 3	4 4	3 3	4 4	3 3	3 3	4 3	3 2	2 2	3 2	2 2	2 2	3 2	2 2	2 2	3 2
40.000	PSF	***54***	***89***	***62***	***89***		***101***	***113***		***119***															
	B, D, F, H, J	2	2	2	2	2	2	3	2	2	3	2	3	3	2	3	2	2	2	2	2	2	2	2	2
		1 1	1 1	1 1	2 2	2 2	2 2	3 3	3 3	3 3	4 4	3 3	4 4	5 5	4 3	5 4	4 4	3 3	5 4	5 5	4 3	5 4	5 4	4 3	5 4
	A,C,E, G,I	2	2	2	2	2	2	2	2	2	2	2	2	2	2	2	2	2	2	2	2	2	2	2	2
		1 1	1 1	1 1	2 2	2 2	2 2	3 3	3 3	3 3	4 4	3 3	4 3	4 3	3 3	4 3	3 3	2 2	3 2	3 3	2 2	3 2	3 3	2 2	3 2
44.000	PSF	***49***	***81***	***56***	***81***	***119***	***92***	***102***		***117***	***118***														
	B, D, F, H, J	2	2	2	3	2	2	3	2	3	3	2	3	3	2	3	3	2	2	3	2	2	2	2	2
		1 1	1 1	1 1	2 2	2 2	2 2	3 3	3 3	3 3	4 4	3 3	4 4	5 5	4 3	5 5	4 5	4 3	5 4	5 5	4 3	5 4	5 5	4 3	5 4
	A,C,E, G,I	2	2	2	2	2	2	2	2	2	2	2	2	2	2	2	2	2	2	2	2	2	2	2	2
		1 1	1 1	1 1	2 2	2 2	2 2	3 3	3 3	3 3	3 4	3 3	3 3	4 4	3 3	4 3	3 3	2 2	3 3	3 3	3 2	3 3	3 3	3 2	3 3
48.000	PSF	***45***	***74***	***51***	***74***	***119***	***84***	***94***		***107***	***109***			***114***											
	B, D, F, H, J	2	2	2	3	2	3	3	2	3	3	2	3	4	2	3	3	2	3	3	2	3	3	2	3
		1 1	1 1	1 1	2 2	2 2	2 2	3 3	3 3	3 3	4 4	4 4	4 4	5 5	4 4	5 5	5 5	4 3	5 4	5 5	4 3	5 5	5 5	4 3	5 4
	A,C,E, G,I	2	2	2	2	2	2	2	2	2	2	2	2	2	2	2	2	2	2	2	2	2	2	2	2
		1 1	1 1	1 1	2 2	2 2	2 2	3 3	3 3	3 3	3 4	3 3	3 3	3 4	3 3	4 3	3 3	2 2	3 3	3 3	3 2	3 3	3 3	3 2	3 3
53.125	PSF	***41***	***67***	***46***	***67***	***110***	***76***	***85***	***119***	***97***	***98***		***112***												
	B, D, F, H, J	3	2	2	3	2	3	4	2	3	4	3	3	4	2	3	3	2	3	3	2	3	3	2	3
		1 1	1 1	1 1	2 2	2 2	2 2	3 3	3 3	3 3	4 4	4 4	4 4	5 5	4 4	5 5	5 5	4 3	5 4	5 5	4 3	6 5	5 6	4 3	6 5
	A,C,E, G,I	2	2	2	2	2	2	2	2	2	2	2	2	2	2	2	2	2	2	2	2	2	2	2	2
		1 1	1 1	1 1	2 2	2 2	2 2	3 3	3 2	3 3	3 4	3 3	3 3	3 4	2 3	3 3	3 3	2 2	3 3	3 3	2 2	3 3	3 3	3 2	3 3

ANCHORAGE NOTES:

1. ANCHOR TYPES: 1 - 1/4" ELCO TAPCONS
   2 - 1/4" ELCO SS4 CRETE-FLEX
   3 - #12 SCREWS
2. ANCHOR LOCATIONS ARE BASED ON THE FOLLOWING DIMENSIONS:
   HEAD - 18 1/2" MAX. FROM TOP CORNERS
   JAMBS - 17 1/2" MAX. FROM TOP CORNERS
   15" MAX. FROM BOTTOM CORNERS
   6" MAX. BELOW MTG. RAIL
   SILL - ANCHORS NOT REQUIRED
3. INSTALL PER THE ADJACENT TABLE ANCHOR QUANTITIES USING THE DIMENSIONAL CRITERIA OF NOTE 2.
4. DESIGN PRESSURE LIMITATIONS:
   SIZE BLOCKS OF THE ADJACENT TABLE WITH A BOLD ITALICIZED VALUE ABOVE THEM, INDICATE A MAXIMUM DESIGN PRESSURE WITH THE QUANTITY OF ANCHORS SHOWN IN BOLD, DUE TO ANCHOR SPACING LIMITATIONS. OTHERWISE, THE MAXIMUM DESIGN PRESSURE FOR THE RESPECTIVE SIZE AND GLASS TYPE IS AVAILABLE.

TABLE KEY:

(DP LIMITED)

MAX. PSF	117
HEAD	3
JAMB ABOVE MTG. RAIL	3 3
JAMB BELOW MTG. RAIL	

(FULL DP)

HEAD	2
JAMB ABOVE MTG. RAIL	3 2
JAMB BELOW MTG. RAIL	

PRODUCT RENEWED
as complying with the Florida Building Code
Acceptance No. 10-1101.03
Expiration Date JAN. 26, 2016
By Maria Pera
Miami Dade Product Control Division

PRODUCT REVISED
as complying with the Florida Building Code
Acceptance No. 06-1211.07
Expiration Date 01/26/11
By
Miami Dade Product Control Division

Revised By:	Date:	Revisions:	
F.K.	2/16/07	C	NO CHANGE THIS SHEET
F.K.	2/6/07	B	BOLD & ITALICIZE DP LIMITED SIZES AND MOD. NOTE 4
F.K.	11/27/06	A	REVISE ANCHORAGE TABLE AND NOTES. ADD DP MAX. WHERE ANCHOR QTY IS RESTRICTED BY SIZE.
Drawn By: F.K.	Date: 7/4/05	Checked By: J.J.	Date: 9/21/05

1070 TECHNOLOGY DRIVE
NOKOMIS, FL 34275
P.O. BOX 1529
NOKOMIS, FL 34274

PGT Visibly Better

Description: ANCHORAGE SPACING, STANDARD VIEW

Title: ALUM. SINGLE HUNG WINDOW, NON-IMPACT

Series/Model:	Scale:	Sheet:	Drawing No.	Rev:
SH600	NTS	11 of 14	4032-20	C

2/27/07

Robert L. Clark, P.E.
PE #39712
Structural

ANCHOR QUANTITIES ABOVE MEETING RAIL (HEAD & JAMBS), CUSTOM FLANGED WINDOW HEIGHT MINUS SASH HEIGHT TABLE 7.

WINDOW HEIGHT MINUS SASH HEIGHT FROM TABLE 6.

SUBSTRATE:		17.125			22.668			28.211			33.754			39.296			44.839			50.382			55.925		
ANCHOR TYPE:		2,3 WOOD	2 CONC	1 CONC	2,3 WOOD	2 CONC	1 CONC	2,3 WOOD	2 CONC	1 CONC	2,3 WOOD	2 CONC	1 CONC	2,3 WOOD	2 CONC	1 CONC	2,3 WOOD	2 CONC	1 CONC	2,3 WOOD	2 CONC	1 CONC	2,3 WOOD	2 CONC	1 CONC
WINDOW WIDTH	GLASS TYPE																								
19.125	PSF	***119***		***119***																					
	B, D, F, H, J	1	1	1	1	1	1	1	1	1	1	1	1	1	1	1	1	1	1	1	1	1	1	1	1
		1	1	1	2	2	2	2	2	3	3	2	3	3	3	4	4	3	4	4	3	5	5	4	5
	G	1	1	1	1	1	1	1	1	1	1	1	1	1	1	1	1	1	1	1	1	1	1	1	1
		1	1	1	2	2	2	2	2	3	3	2	3	3	3	4	4	3	4	4	3	5	4	4	5
	A,C,E,I	1	1	1	1	1	1	1	1	1	1	1	1	1	1	1	1	1	1	1	1	1	1	1	1
		1	1	1	2	2	2	2	2	3	3	2	3	3	3	3	3	3	4	3	3	4	3	3	3
24.000	PSF	***119***		***119***			***119***																		
	B, D, F, H, J	1	1	1	1	1	1	1	1	1	1	1	1	1	1	1	1	1	1	1	1	1	1	1	1
		1	1	1	2	2	2	3	2	3	4	3	4	4	3	4	5	3	5	5	4	6	6	4	6
	G	1	1	1	1	1	1	1	1	1	1	1	1	1	1	1	1	1	1	1	1	1	1	1	1
		1	1	1	2	2	2	3	2	3	4	3	4	4	3	4	5	3	5	5	4	6	4	4	5
	A,C,E,I	1	1	1	1	1	1	1	1	1	1	1	1	1	1	1	1	1	1	1	1	1	1	1	1
		1	1	1	2	2	2	3	2	3	4	3	4	4	3	4	3	3	4	3	3	4	3	3	3
32.000	PSF	***110***		***105***	***118***		***106***	***119***		***110***			***119***												
	B, D, F, H, J	**2**	1	1	**2**	1	**2**	**2**	1	**2**	2	1	**2**	2	1	2	2	1	2	2	1	2	2	1	2
		1	1	1	**2**	2	**2**	**3**	3	**3**	4	3	**4**	5	4	5	6	4	6	6	5	7	6	5	6
	G	**2**	1	1	**2**	2	**2**	**2**	3	**2**	2	3	**2**	2	4	2	2	4	2	2	4	2	2	4	1
		1	1	1	**2**	2	**2**	**3**	3	**3**	4	3	**4**	5	4	5	6	4	6	5	4	6	5	4	5
	A,C,E,I	**2**	1	1	**2**	1	**2**	**2**	1	**2**	2	1	2	2	1	1	1	1	1	1	1	1	1	1	1
		1	1	1	**2**	2	**2**	**3**	3	**3**	3	3	3	4	3	4	4	3	4	4	3	4	3	3	3
37.000	PSF	***97***		***91***	***102***	***119***	***92***	***106***		***95***	***110***		***99***			***119***			***119***						
	B, D, F, H, J	**2**	1	**2**	**2**	**2**	**2**	**2**	2	**2**	**3**	2	**2**	3	2	**2**	3	2	**2**	2	2	2	2	1	2
		1	1	1	**2**	**2**	**2**	**3**	3	**3**	**4**	4	**4**	5	4	**5**	6	5	**6**	6	5	7	6	5	7
	G	**2**	1	**2**	**2**	**2**	**2**	**2**	2	**2**	**3**	2	**2**	3	2	**2**	3	2	2	2	2	2	2	1	2
		1	1	1	**2**	**2**	**2**	**3**	3	**3**	**4**	4	**4**	5	4	**5**	6	5	6	6	4	6	5	4	5
	A,C,E,I	**2**	1	**2**	**2**	**2**	**2**	2	1	**2**	2	1	2	2	1	2	2	1	2	2	1	1	1	1	1
		1	1	1	**2**	**2**	**2**	**3**	3	**3**	4	3	4	4	3	4	4	3	4	4	3	4	4	3	4
40.000	PSF	***91***		***84***	***94***	***119***	***85***	***98***	***119***	***88***	***102***		***91***	***105***		***94***			***115***						
	B, D, F, H, J	**2**	2	**2**	**2**	**2**	**2**	**3**	**2**	**2**	**3**	2	**3**	**3**	2	**3**	3	2	**3**	3	2	2	2	2	2
		1	1	1	**2**	**2**	**2**	**3**	**3**	**3**	**4**	4	**4**	**5**	5	**5**	6	5	**6**	6	5	7	6	5	7
	G	**2**	2	**2**	**2**	**2**	**2**	**3**	**2**	**2**	**3**	2	**3**	**3**	2	**3**	3	2	**3**	2	2	2	2	2	2
		1	1	1	**2**	**2**	**2**	**3**	**3**	**3**	**4**	4	**4**	**5**	5	**5**	6	5	**6**	6	4	6	5	4	6
	A,C,E,I	**2**	2	**2**	**2**	**2**	**2**	**2**	2	**2**	2	2	**2**	2	2	2	2	2	2	2	2	2	2	2	2
		1	1	1	**2**	**2**	**2**	**3**	**3**	**3**	**4**	3	**4**	4	3	5	4	3	5	4	3	4	4	3	4
44.000	PSF	***84***		***76***	***86***	***112***	***77***	***89***	***116***	***80***	***93***	***119***	***83***	***95***		***86***			***108***						
	B, D, F, H, J	**2**	2	**2**	**3**	**2**	**2**	**3**	**2**	**3**	**3**	**2**	**3**	**3**	2	**3**	3	2	**3**	3	2	3	3	2	2
		1	1	1	**2**	**2**	**2**	**3**	**3**	**3**	**4**	**4**	**4**	**5**	5	**5**	6	5	**6**	7	5	7	6	5	7
	G	**2**	2	**2**	**3**	**2**	**2**	**3**	**2**	**3**	**3**	2	**3**	**3**	2	**3**	3	2	**3**	3	2	2	2	2	2
		1	1	1	**2**	**2**	**2**	**3**	**3**	**3**	**4**	**4**	**4**	**5**	4	**5**	6	4	6	6	5	7	5	4	6
	A,C,E,I	**2**	2	**2**	**2**	**2**	**2**	**2**	2	**2**	**2**	2	**2**	2	2	2	2	2	2	2	2	2	2	2	2
		1	1	1	**2**	**2**	**2**	**3**	**3**	**3**	**4**	**4**	**4**	4	3	4	3	3	4	4	3	5	4	3	4
48.000	PSF	***78***	***102***	***70***	***79***	***102***	***71***	***82***	***107***	***73***	***85***	***110***	***76***	***87***		***78***	***90***		***80***			***102***			
	B, D, F, H, J	**2**	**2**	**2**	**3**	**2**	**3**	**3**	**2**	**3**	**4**	**2**	**3**	**3**	2	**3**	**3**	2	**3**	3	2	**3**	3	2	3
		1	**1**	1	**2**	**2**	**2**	**3**	**3**	**3**	**4**	**4**	**4**	**5**	5	**5**	**6**	6	**6**	7	5	**7**	7	5	7
	G	**2**	**2**	**2**	**3**	**2**	**3**	**3**	**2**	**3**	**3**	2	**3**	**3**	2	**3**	3	2	**3**	3	2	3	2	2	2
		1	**1**	1	**2**	**2**	**2**	**3**	**3**	**3**	**4**	**4**	**4**	**5**	5	**5**	6	5	**6**	6	5	6	5	4	6
	A,C,E,I	**2**	**2**	**2**	**2**	**2**	**2**	**2**	**2**	**2**	**2**	2	**2**	2	2	2	2	2	2	2	2	2	2	2	2
		1	**1**	1	**2**	**2**	**2**	**3**	**3**	**3**	**4**	3	**4**	4	3	4	4	3	4	4	3	4	4	3	4
53.125	PSF	***71***	***92***	***63***	***71***	***92***	***64***	***74***	***96***	***66***	***77***	***100***	***69***	***79***		***71***	***81***		***73***			***74***			
	B, D, F, H, J	**3**	**2**	**2**	**3**	**2**	**3**	**4**	**2**	**3**	**4**	**2**	**3**	**3**	2	**3**	**3**	2	**3**	3	2	**3**	3	2	3
		1	**1**	1	**2**	**2**	**2**	**3**	**3**	**3**	**4**	**4**	**4**	**5**	5	**5**	**6**	6	**6**	7	6	**7**	7	5	8
	G	**3**	**2**	**2**	**3**	**2**	**3**	**3**	**2**	**3**	**3**	2	**3**	**3**	2	**3**	3	2	**3**	3	2	3	3	2	3
		1	**1**	1	**2**	**2**	**2**	**3**	**3**	**3**	**4**	**4**	**4**	**5**	4	**5**	6	5	**6**	6	5	7	6	5	6
	A,C,E,I	**2**	**2**	**2**	**2**	**2**	**2**	**2**	2	**2**	2	2	**2**	2	2	2	2	2	2	2	2	2	2	2	2
		1	**1**	1	**2**	**2**	**2**	**3**	**3**	**3**	**4**	3	**4**	4	3	4	4	3	4	4	3	4	4	3	4

ANCHORAGE NOTES:

1. ANCHOR TYPES: 1 - 1/4" ELCO TAPCONS
   2 - 1/4" ELCO SS4 CRETE-FLEX
   3 - #12 SCREWS
2. ANCHOR LOCATIONS ARE BASED ON THE FOLLOWIING DIMENSIONS FOR ABOVE THE MEETING RAIL:
   HEAD - 18 1/2" MAX. FROM CORNERS
   JAMBS - 17 1/2" MAX. FROM TOP CORNERS
   11 1/2" MAX. ABOVE THE MEETING RAIL
3. INSTALL PER THE ADJACENT TABLE ANCHOR QUANTITIES FOR ABOVE THE MEETING RAIL USING THE DIMENSIONAL CRITERIA OF NOTE 2. USE THE SASH HEIGHT TABLE ON THE NEXT PAGE TO COMPLETE THE ANCHORAGE REQUIREMENTS FOR CUSTOM VIEW WINDOWS.
4. AVAILABLE SASH HEIGHTS FOR CUSTOM VIEW WINDOWS ARE 12 5/8" MIN. TO 38" MAX.
5. DESIGN PRESSURE LIMITED:
   SIZE BLOCKS OF THE ADJACENT TABLE WITH A BOLD ITALICIZED VALUE ABOVE THEM, INDICATE A MAXIMUM DESIGN PRESSURE WITH THE QUANTITY OF ANCHORS SHOWN IN BOLD, DUE TO ANCHOR SPACING LIMITATIONS. OTHERWISE, THE MAXIMUM DESIGN PRESSURE FOR THE RESPECTIVE SIZE AND GLASS TYPE IS AVAILABLE.

TABLE KEY:

(DP LIMITED)

MAX. PSF	***112***
HEAD	**2**
JAMB ABOVE MTG. RAIL	**2**

(FULL DEP)

HEAD	2
JAMB ABOVE MTG. RAIL	4

PRODUCT RENEWED
as complying with the Florida Building Code
Acceptance No. 10-1101.03
Expiration Date JAN. 26, 2016
By [signature]
Miami Dade Product Control Division

PRODUCT REVISED
as complying with the Florida Building Code
Acceptance No. 06-1211.07
Expiration Date 01/26/11
By [signature]
Miami Dade Product Control Division

7/27/07
Robert L. Clark, P.E.
PE #39712
Structural

Revsd By:	Date:	Revisions:	
F.K.	2/16/07	C	NO CHANGE THIS SHEET
F.K.	2/6/07	B	BOLD & ITALICIZE DP LIMITED SIZES AND MOD. NOTE 5
F.K.	11/27/06	A	REVISE FORMAT, ANCHORAGE TABLE AND NOTES. ADD DP MAX. WHERE ANCHOR QTY IS RESTRICTED BY SIZE.
Drawn By: F.K.	Date: 7/4/05	Checked By: J.J.	Date: 9/21/05

1070 TECHNOLOGY DRIVE
NOKOMIS, FL 34275

P.O. BOX 1529
NOKOMIS, FL 34274

PGT Visibly Better

Description: ANCHORAGE, CUSTOM VIEW ABOVE MTG. RAIL

Title: ALUM. SINGLE HUNG WINDOW, NON-IMPACT

Series/Model:	Scale:	Sheet:	Drawing No.	Rev:
SH600	NTS	12 of 14	4032-20	C

ANCHOR QUANTITIES BELOW MEETING RAIL (JAMBS), CUSTOM FLANGED WINDOWS BASED ON SASH HEIGHT

TABLE 8.

SUBSTRATE:		SASH HEIGHT																										
ANCHOR TYPE:		12.776			15.776			18.776			21.776			24.776			27.776			30.776			31.106		
WINDOW WIDTH	MAX. PSF	2,3 WOOD	2 CONC	1 CONC	2,3 WOOD	2 CONC	1 CONC	2,3 WOOD	2 CONC	1 CONC	2,3 WOOD	2 CONC	1 CONC	2,3 WOOD	2 CONC	1 CONC	2,3 WOOD	2 CONC	1 CONC	2,3 WOOD	2 CONC	1 CONC	2,3 WOOD	2 CONC	1 CONC
19.125	-120	2	1	2	2	2	2	2	2	2	2	2	2	3	2	2	3	2	3	3	2	3	3	2	3
	-110	2	1	2	2	2	2	2	2	2	2	2	2	2	2	2	3	2	2	3	2	3	3	2	3
	-95	2	1	1	2	1	2	2	2	2	2	2	2	2	2	2	2	2	2	3	2	2	3	2	2
	-80	1	1	1	2	1	2	2	1	2	2	2	2	2	2	2	2	2	2	2	2	2	2	2	2
	-65	1	1	1	1	1	1	2	1	2	2	2	2	2	2	2	2	2	2	2	2	2	2	2	2
	-50	1	1	1	1	1	1	1	1	1	2	2	2	2	2	2	2	2	2	2	2	2	2	2	2
24.000	-120	2	2	2	***NA***	2	2	3	2	2	3	2	3	3	2	3	4	2	3	4	3	4	4	3	4
	-110	2	1	2	2	2	2	3	2	2	3	2	2	3	2	3	4	2	3	4	2	3	4	2	3
	-95	2	1	2	2	2	2	2	2	2	2	2	2	3	2	2	3	2	3	3	2	3	3	2	3
	-80	2	1	1	2	1	2	2	2	2	2	2	2	2	2	2	2	2	2	3	2	2	3	2	2
	-65	1	1	1	2	1	2	2	1	2	2	2	2	2	2	2	2	2	2	2	2	2	2	2	2
	-50	1	1	1	1	1	1	2	1	1	2	2	2	2	2	2	2	2	2	2	2	2	2	2	2
32.000	-120	***NA***	2	2	***NA***	2	***NA***	3	3	3	3	3	3	4	3	4	5	3	4	5	3	4	5	3	4
	-110	2	2	2	***NA***	2	***NA***	3	2	3	3	3	3	4	3	3	4	3	4	4	3	4	4	3	4
	-95	2	2	2	***NA***	2	2	3	2	3	3	2	3	3	2	3	4	2	3	4	3	4	4	3	4
	-80	2	1	2	2	2	2	3	2	2	3	2	3	3	2	3	3	2	3	4	2	3	4	2	3
	-65	2	1	2	2	1	2	2	2	2	3	2	2	3	2	2	3	2	2	3	2	2	3	2	2
	-50	1	1	1	2	1	1	2	1	2	2	2	2	2	2	2	2	2	2	2	2	2	2	2	2
37.000	-120	***NA***	2	***NA***	***NA***	2	***NA***	***NA***	3	3	4	3	4	5	3	4	5	3	5	5	4	5	5	4	5
	-110	***NA***	2	2	***NA***	2	***NA***	3	3	3	4	3	3	4	3	4	5	3	4	5	3	5	5	3	5
	-95	2	2	2	***NA***	2	***NA***	3	2	3	3	3	3	4	3	3	4	3	4	5	3	4	5	3	4
	-80	2	1	2	***NA***	2	2	3	2	3	3	2	3	3	3	3	3	3	3	4	3	3	4	3	4
	-65	2	1	2	2	1	2	2	2	2	3	2	3	3	2	3	3	2	3	3	2	3	3	2	3
	-50	1	1	1	2	1	2	2	1	2	2	2	2	3	2	2	3	2	2	3	2	2	3	2	3
40.000	-120	***NA***	2	***NA***	***NA***	2	***NA***	***NA***	3	***NA***	4	3	4	5	3	4	5	3	5	6	4	5	6	4	5
	-110	***NA***	2	***NA***	***NA***	2	***NA***	***NA***	3	3	4	3	4	5	3	4	5	3	5	5	3	5	5	4	5
	-95	***NA***	2	2	***NA***	2	***NA***	3	2	3	4	3	3	4	3	3	4	3	4	5	3	4	5	3	5
	-80	2	2	2	***NA***	2	2	3	2	3	3	2	3	3	3	3	4	3	3	4	3	4	4	3	4
	-65	2	1	2	2	2	2	3	2	2	3	2	3	3	2	3	3	2	3	3	3	3	3	3	3
	-50	2	1	1	2	1	2	2	1	2	2	2	2	3	2	2	3	2	3	3	2	3	3	2	3
44.000	-120	***NA***	2	***NA***	***NA***	***NA***	***NA***	***NA***	3	***NA***	***NA***	3	4	5	3	5	6	4	5	6	4	6	6	4	6
	-110	***NA***	2	***NA***	***NA***	2	***NA***	***NA***	3	***NA***	4	3	4	5	3	4	6	3	5	6	4	5	6	4	5
	-95	***NA***	2	2	***NA***	2	***NA***	***NA***	3	3	4	3	4	4	3	4	5	3	4	5	3	5	5	3	5
	-80	2	2	2	***NA***	2	***NA***	3	2	3	3	3	3	4	3	3	4	3	4	5	3	4	5	3	4
	-65	2	1	2	2	2	2	3	2	3	3	2	3	3	2	3	3	3	3	4	3	3	4	3	3
	-50	2	1	2	2	1	2	2	2	2	3	2	2	3	2	3	3	2	3	3	2	3	3	2	3
48.000	-120	***NA***	2	***NA***	***NA***	***NA***	***NA***	***NA***	3	***NA***	***NA***	4	4	***NA***	4	5	6	4	6	7	4	6	7	5	6
	-110	***NA***	2	***NA***	***NA***	***NA***	***NA***	***NA***	3	***NA***	***NA***	3	4	5	4	5	6	4	5	6	4	6	6	4	6
	-95	***NA***	2	***NA***	***NA***	2	***NA***	***NA***	3	***NA***	4	3	4	4	3	4	5	3	5	6	3	5	6	4	5
	-80	2	2	2	***NA***	2	***NA***	***NA***	2	3	4	3	3	4	3	4	4	3	4	5	3	4	5	3	4
	-65	2	1	2	***NA***	2	2	3	2	3	3	2	3	3	3	3	4	3	3	4	3	3	4	3	3
	-50	2	1	2	2	1	2	2	2	2	3	2	2	3	2	3	3	2	3	3	3	3	3	3	3
53.125	-120	***NA***	2	***NA***	***NA***	***NA***	***NA***	***NA***	***NA***	***NA***	***NA***	4	***NA***	***NA***	4	5	***NA***	4	6	7	5	7	7	5	7
	-110	***NA***	2	***NA***	***NA***	***NA***	***NA***	***NA***	3	***NA***	***NA***	4	***NA***	***NA***	4	5	***NA***	4	6	7	4	6	7	4	6
	-95	***NA***	2	***NA***	***NA***	2	***NA***	***NA***	3	***NA***	***NA***	3	4	5	4	4	6	4	5	6	4	6	6	4	6
	-80	***NA***	2	2	***NA***	2	***NA***	***NA***	3	3	4	3	4	4	3	4	5	3	4	5	3	5	5	3	5
	-65	2	2	2	***NA***	2	2	3	2	3	4	2	3	4	3	3	4	3	4	4	3	4	4	3	4
	-50	2	1	2	2	2	2	3	2	2	3	2	3	3	2	3	3	2	3	3	3	3	4	3	3

ANCHORAGE NOTES:

1. ANCHOR TYPES: 1 - 1/4" ELCO TAPCONS
   2 - 1/4" ELCO SS4 CRETE-FLEX
   3 - #12 SCREWS
2. ANCHOR LOCATIONS ARE BASED ON THE FOLLOWIING DIMENSIONS FOR BELOW THE MEETING RAIL.
   JAMBS - 6" MAX. BELOW MTG. RAIL
   15" MAX. FROM BOTTOM CORNERS
   SILL - ANCHORS NOT REQUIRED
3. INSTALL PER THE ADJACENT TABLE ANCHOR QUANTITIES FOR BELOW THE MEETING RAIL USING THE DIMENSIONAL CRITERIA OF NOTE 2. USE WITH THE TABLE ON THE PRECEDING PAGE TO COMPLETE THE ANCHORAGE REQUIREMENTS FOR CUSTOM VIEW WINDOWS.
5. SASH SIZE BLOCKS OF THE ADJACENT TABLE WITH A BOLD ITALICIZED "NA" IN THEM, MEANS RESPECTIVE ANCHOR AND SUBSTRATE COMBINATION IS NOT AVAILABLE FOR THE RESPECTIVE MAX. PSF.

PRODUCT RENEWED
as complying with the Florida Building Code
Acceptance No. 10-1101.03
Expiration Date JAN. 26, 2016
By Miami Dade Product Control Division

PRODUCT REVISED
as complying with the Florida Building Code
Acceptance No. 06-1211.07
Expiration Date 01/26/11
By Miami Dade Product Control Division

TABLE KEY:

JAMB BELOW MTG. RAIL

2

2/27/07

Revised By:	Date:	Revisions:	
F.K.	2/16/07	C	NO CHANGE THIS SHEET
F.K.	2/6/07	B	BOLD & ITALICIZE "NA" FOR SELECT SIZES AND MOD. NOTE 5
F.K.	11/27/06	A	NEW SHEET. ADD SASH HEIGHT FORMAT, ANCHORAGE TABLE AND NOTES.
Drawn By: F.K.	Date: 7/4/05	Checked By: J.J.	Date: 9/21/05

1070 TECHNOLOGY DRIVE
NOKOMIS, FL 34275

P.O. BOX 1529
NOKOMIS, FL 34274

PGT Visibly Better

Description: ANCHORAGE, CUSTOM VIEW BELOW MTG. RAIL

Title: ALUM. SINGLE HUNG WINDOW, NON-IMPACT

Series/Model:	Scale:	Sheet:	Drawing No.	Rev:
SH600	NTS	13 of 14	4032-20	C

EXTERIOR INTERIOR
(ALL HEAD AND SILL DETAILS)

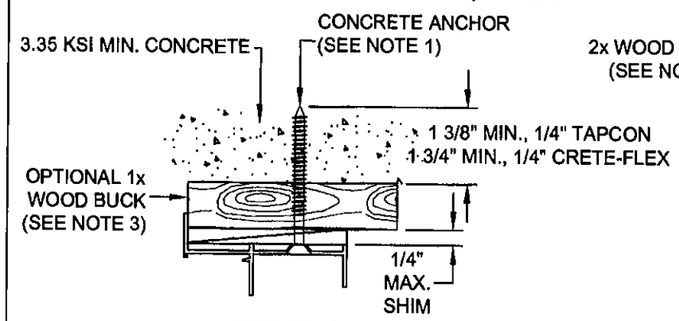

DETAIL A

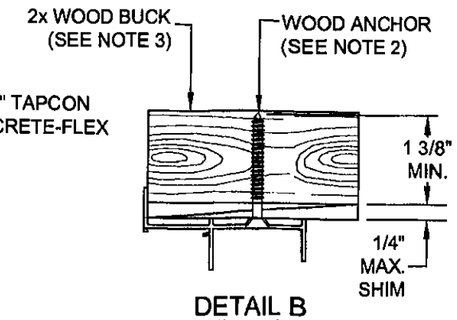

DETAIL B

TYPICAL FLANGED HEAD ANCHORAGE

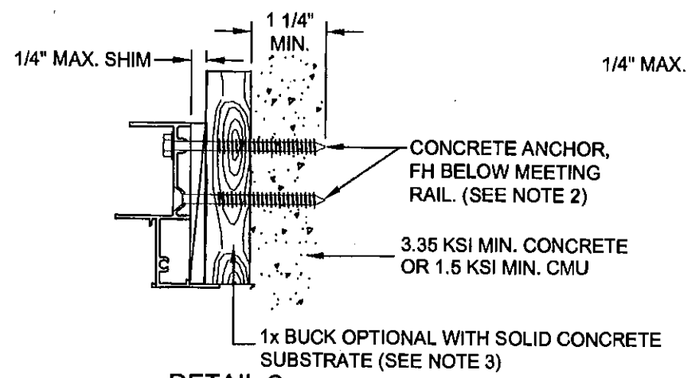

DETAIL C

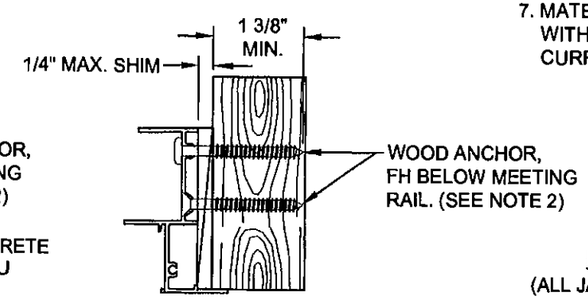

DETAIL D

INTERIOR
(ALL JAMB DETAILS)
EXTERIOR

TYPICAL FLANGED JAMB ANCHORAGE

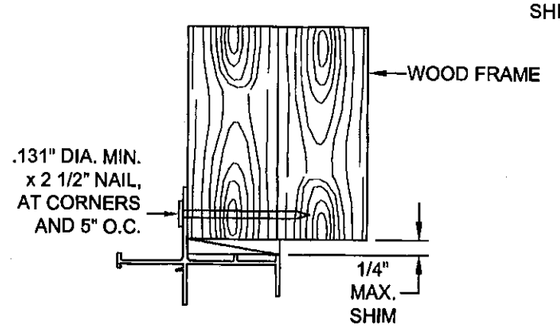

DETAIL F, (HEAD)

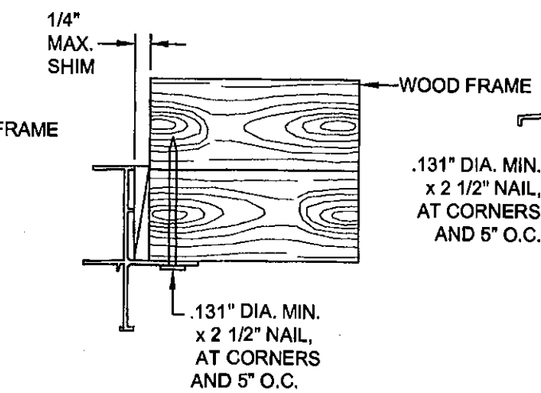

DETAIL E, (JAMB)

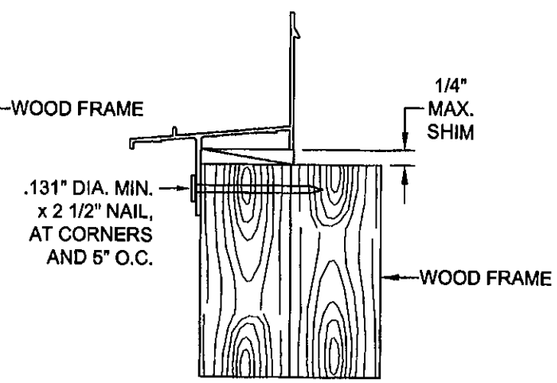

DETAIL G, (SILL)

TYPICAL INTEGRAL FIN ANCHORAGE

NOTES:

1. FOR CONCRETE APPLICATIONS IN MIAMI-DADE COUNTY, USE ONLY MIAMI-DADE COUNTY APPROVED 1/4" ELCO TAPCONS OR 1/4" SS4 CRETE-FLEX. MINIMUM DISTANCE FROM ANCHOR TO CONCRETE EDGE IS 1 3/4".
2. FOR WOOD APPLICATIONS IN MIAMI-DADE COUNTY, USE #12 STEEL SCREWS (G5) OR 1/4" SS4 CRETE-FLEX.
3. WOOD BUCKS DEPICTED IN THE SECTIONS ON THIS PAGE AS 1x ARE BUCKS WHOSE TOTAL THICKNESS IS LESS THAN 1 1/2". 1x WOOD BUCKS ARE OPTIONAL IF UNIT CAN BE INSTALLED DIRECTLY TO SOLID CONCRETE. WOOD BUCKS DEPICTED AS 2x ARE 1 1/2" THICK OR GREATER. INSTALLATION TO THE SUBSTRATE OF WOOD BUCKS TO BE ENGINEERED BY OTHERS OR AS APPROVED BY AUTHORITY HAVING JURISDICTION.
4. FOR ATTACHMENT TO ALUMINUM: THE MATERIAL SHALL BE A MINIMUM STRENGTH OF 6063-T5 AND A MINIMUM OF 1/8" THICK. THE ALUMINUM STRUCTURAL MEMBER SHALL BE OF A SIZE TO PROVIDE FULL SUPPORT TO THE WINDOW FRAME SIMILAR TO THAT SHOWN IN THESE DETAILS FOR 2x WOOD BUCKS. THE ANCHOR SHALL BE A #12 SHEET METAL SCREW WITH FULL ENGAGEMENT INTO THE ALUMINUM. IF THESE CRITERIA ARE MET, THE RESPECTIVE DESIGN PRESSURES AND ANCHORAGE SPACING FOR TAPCONS MAY BE USED.
5. ANCHORS ARE NOT REQUIRED AT THE SILL OF FLANGED UNITS.
6. FLAT HEAD ANCHORS, WHERE REQUIRED, MUST HAVE #12 TRIMFIT HEADS.
7. MATERIALS, INCLUDING BUT NOT LIMITED TO STEEL SCREWS, THAT COME INTO CONTACT WITH OTHER DISSIMILAR MATERIALS SHALL MEET THE REQUIREMENTS OF FBC, CURRENT EDITION, SECTION 2003.8.4 (SUPPLEMENT 2005).

PRODUCT RENEWED
as complying with the Florida
Building Code
Acceptance No. 10-1101.03
Expiration Date JAN. 26, 2016
By
Miami-Dade Product Control
Division

PRODUCT REVISED
as complying with the Florida
Building Code
Acceptance No. 06-1211.07
Expiration Date 01/25/11
By
Miami-Dade Product Control
Division

Revised By:	Date:	Revisions:	
F.K.	2/16/07	C	NO CHANGE THIS SHEET
F.K.	2/6/07	B	SPECIFY FBC, CURRENT EDITION, NOTE 7.
F.K.	11/27/06	A	ADD INTEGRAL FIN ANCHORAGE, UPDATE NOTES 1 & 5. ADD NOTES 6 & 7. UPDATE CONCRETE EMBEDMENT DIM.
Drawn By: F.K.	Date: 7/4/05	Checked By: J.J.	Date: 9/21/05

1070 TECHNOLOGY DRIVE
NOKOMIS, FL 34275

P.O. BOX 1529
NOKOMIS, FL 34274

PGT
Visibly Better

Description: ANCHORAGE DETAILS

Title: ALUM. SINGLE HUNG WINDOW, NON-IMPACT

Series/Model:	Scale:	Sheet:	Drawing No.	Rev:
SH600	NTS	14 of 14	4032-20	C

2/22/07