MIAMI-DADE COUNTY
BUILDING AND NEIGHBORHOOD COMPLIANCE DEPARTMENT (BNC)
BOARD AND CODE ADMINISTRATION DIVISION

MIAMI-DADE COUNTY
PRODUCT CONTROL SECTION
11805 SW 26 Street, Room 208
Miami, Florida 33175-2474
T (786) 315-2590 F (786) 315-2599
www.miamidade.gov/building/home/asp

NOTICE OF ACCEPTANCE (NOA)

Ruskin Company
3900 Dr. Greaves Road
Grandview, MO 64030

SCOPE: This NOA is being issued under the applicable rules and regulations governing the use of construction materials. The documentation submitted has been reviewed by Miami-Dade County Product Control Section and accepted by the Board of Rules and Appeals (BORA) to be used in Miami Dade County and other areas where allowed by the Authority Having Jurisdiction (AHJ).
This NOA shall not be valid after the expiration date stated below. The Miami-Dade County Product Control Section (In Miami-Dade County) and/or the AHJ (in areas other than Miami-Dade County) reserve the right to have this product or material tested for quality assurance purposes. If this product or material fails to perform in the accepted manner, the manufacturer will incur the expense of such testing and the AHJ may immediately revoke, modify, or suspend the use of such product or material within their jurisdiction. BORA reserves the right to revoke this acceptance, if it is determined by Miami-Dade County Product Control Section that this product or material fails to meet the requirements of the applicable building code. This product is approved as described herein, and has been designed to comply with the Florida Building Code, including the High Velocity Hurricane Zone.

DESCRIPTION: Model EME6625D Aluminum Louver with optional CD-50 Damper

APPROVAL DOCUMENT: Drawing No. **60-021563-00D/01D, 02B-04B, 05D-08D, 09B-27B, 28D-37D**, titled "EME6625D & CD50", sheets 1 through 38 of 38, prepared by Ruskin Company, dated 03/16/98, 11/22/96, 04/13/98, 10/15/98, 03/02/07 and 06/04/10, with last revision H, signed and sealed by Daniel J. Rau, P.E., bearing the Miami-Dade County Product Control revision stamp with the Notice of Acceptance number and expiration date by the Miami-Dade County Product Control Section.

MISSILE IMPACT RATING: Large and Small Missile Impact Resistant

LABELING: Each unit shall bear a permanent label with the manufacturer's name or logo, Geneva, AL and following statement: "Miami-Dade County Product Control Approved", unless otherwise noted herein.

RENEWAL of this NOA shall be considered after a renewal application has been filed and there has been no change in the applicable building code negatively affecting the performance of this product.

TERMINATION of this NOA will occur after the expiration date or if there has been a revision or change in the materials, use, and/or manufacture of the product or process. Misuse of this NOA as an endorsement of any product, for sales, advertising or any other purposes shall automatically terminate this NOA. Failure to comply with any section of this NOA shall be cause for termination and removal of NOA.

ADVERTISEMENT: The NOA number preceded by the words Miami-Dade County, Florida, and followed by the expiration date may be displayed in advertising literature. If any portion of the NOA is displayed, then it shall be done in its entirety.

INSPECTION: A copy of this entire NOA shall be provided to the user by the manufacturer or its distributors and shall be available for inspection at the job site at the request of the Building Official.
This NOA **revises NOA # 07-0501.13** and consists of this page 1 and evidence page E-1, as well as approval document mentioned above.
The submitted documentation was reviewed by **Carlos M. Utrera, P.E.**

MIAMI-DADE COUNTY APPROVED

2/4/11

NOA No. 10-1104.05
Expiration Date: January 28, 2012
Approval Date: Febrnary 24, 2011

NOTICE OF ACCEPTANCE: EVIDENCE SUBMITTED

A. DRAWINGS

1. Manufacturer's die drawings and sections.
2. Drawing No. **60-021563-00D/01D, 02B-04B, 05D-08D, 09B-27B, 28D-37D**, titled "EME6625D & CD50", sheets 1 through 38 of 38, prepared by Ruskin Company, dated 03/16/98, 11/22/96, 04/13/98, 10/15/98, 03/02/07 and 06/04/10, with last revision H, signed and sealed by Daniel J. Rau, P.E.

B. TESTS *"Submitted under NOA # 06-1205.08"*

1. Test report on Large Missile Impact Test, Cyclic Wind Pressure Test and Uniform Static Air Pressure Test "Aluminum Louver Assemblies with Damper", prepared by Construction Research Laboratories, Inc., Test Report No. **6496**, dated 05/13/98, signed and sealed by N.S. Balsara, P.E.
2. Test Report on Large Missile Impact Test, Cyclic Wind Pressure Test "Aluminum Louver Assembly with Damper", prepared by Construction Research Laboratories, Inc., Test Report No. **6550**, dated 12/09/98, signed and sealed by N.S. Balsara, P.E.
3. Test Report on wind and wind driven rain resistance on vertical blade louver Model EME6625D with CD50 Damper, prepared by Architectural Testing Report No. **64940.01-109-44,** dated 6/23/06, signed and sealed by Steven M. Urich, P.E.

C. CALCULATIONS

1. EME6625D alternate attachment method, prepared by Ruskin Company, dated 10/18/10, signed and sealed by Daniel J. Rau, P.E.

"Submitted under NOA # 06-1205.08"

2. Louver/Damper Blade & Mullion Calculations, dated 05/11/98, pages 1 to 7 of 7 with appendix A, prepared by R. E. Beason II, signed and sealed by E. P. Hutson Jr., P.E.
3. Louver/Damper Blade & Mullion Calculations, dated 10/20/98, pages 1 to 7 of 7, with appendix A, prepared by R. E. Beason II, signed and sealed by E. P. Hutson Jr., P.E.

D. QUALITY ASSURANCE

1. Miami-Dade Building and Neighborhood Compliance Department (BNC)

E. MATERIAL CERTIFICATIONS

1. None.

F. STATEMENTS

1. Statement letter of code conformance to 2007 FBC issued by Ruskin Company, dated 11/11/10, signed and sealed by Daniel J. Rau, P.E.
2. Statement letter of no financial interest issued by Ruskin Company, dated 11/11/10, signed and sealed by Daniel J. Rau, P.E.

2/4/11

Carlos M. Utrera, P.E.
Product Control Examiner
NOA No. 10-1104.05
Expiration Date: January 28, 2012
Approval Date: February 24, 2011

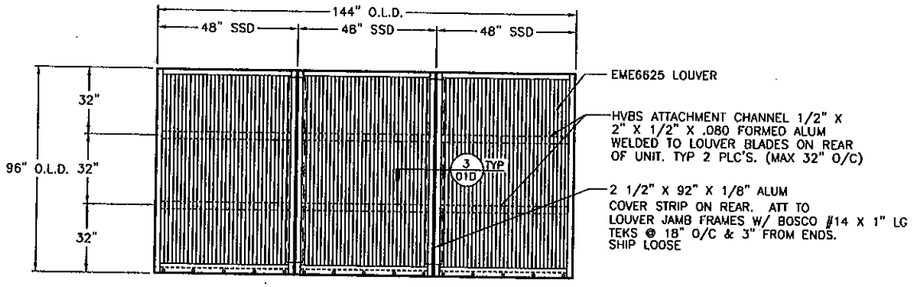

Ⓔ EME6625 LOUVER ASSEMBLY "A"
NTS
DESIGN PRESSURE RATING: +160/ −140 PSF.
FRONT VIEW
Ⓖ SEE SECTION DETAILS -06D FOR APPLICABILITY

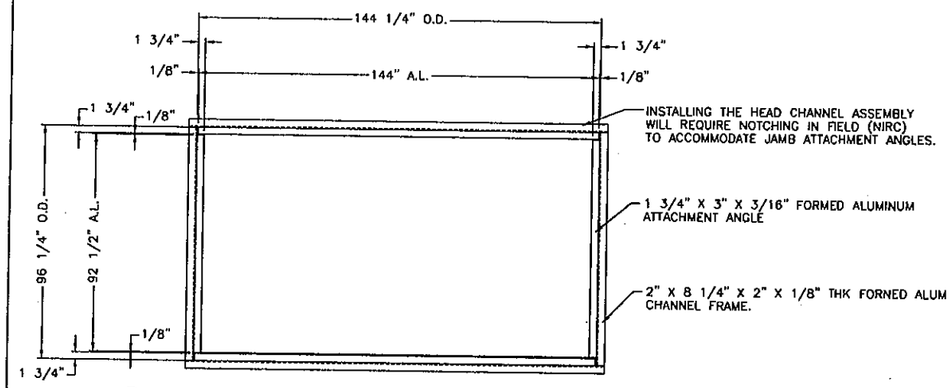

Ⓔ CHANNEL FRAME & ATT ANGLE ELEVATION
REAR VIEW

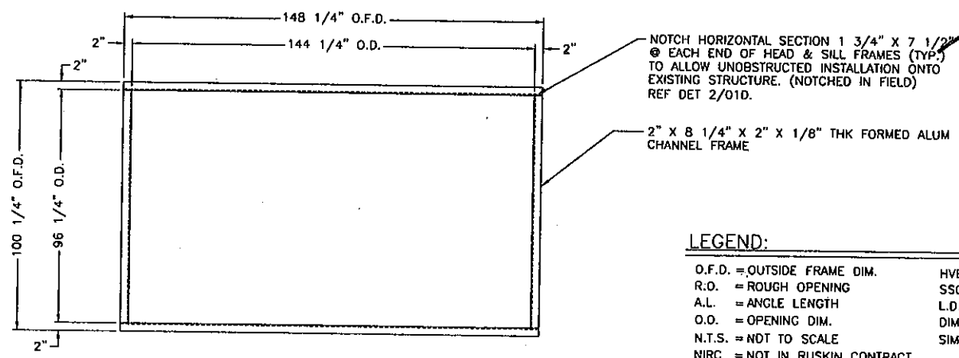

Ⓔ CHANNEL FRAME ELEVATION
FRONT VIEW

1 REAR & FRONT ELEVATIONS VIEW OF CHANNEL FRAME & ATT. ANGLE
N.T.S.

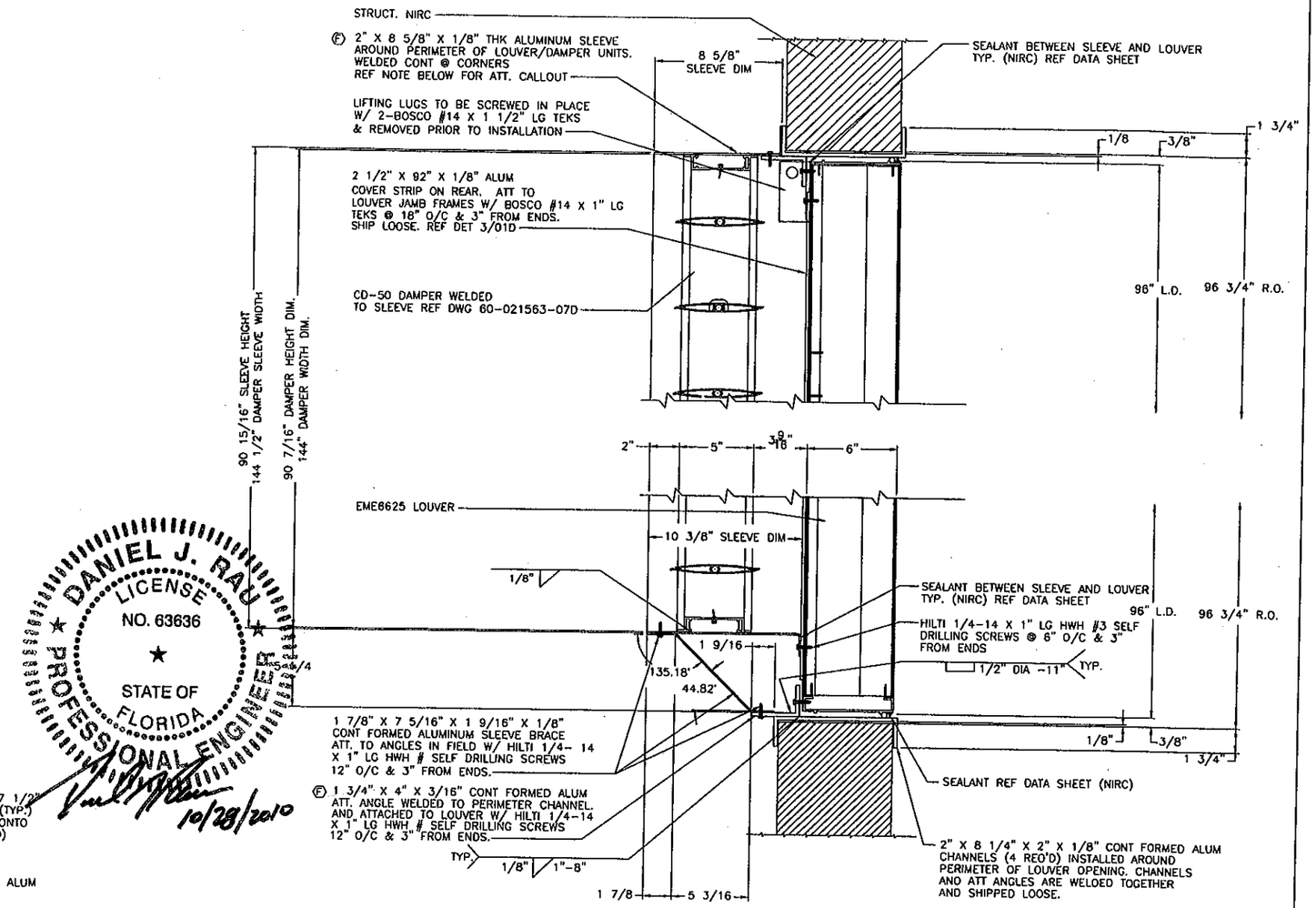

Ⓔ EME6625/CD50 SLEEVED SECTION (JAMB SIM TO HEAD)
3"=1'-0"

DANIEL J. RAU
LICENSE
NO. 63636
STATE OF FLORIDA
PROFESSIONAL ENGINEER
10/28/2010

LEGEND:

O.F.D. = OUTSIDE FRAME DIM.	HVBS = HIDDEN VERTICAL BLADE SUPPORT.
R.O. = ROUGH OPENING	SSO = SHIP SECTION DIM.
A.L. = ANGLE LENGTH	L.D. = LOUVER DIM.
O.O. = OPENING DIM.	DIM. = DIMENSION
N.T.S. = NOT TO SCALE	SIM = SIMILAR
NIRC = NOT IN RUSKIN CONTRACT	

NOTES:

- THE STRUCTURAL SUBSTRATE THAT HOLDS THE LOUVER IN PLACE, IS ASSUMED TO BE STRUCTURALLY SOUND AND STABLE TO TAKE THE LOADS DISPERSED BY THE LOUVER.
- LOUVER IS NONBEARING AND IS NOT DESIGNED TO WITHSTAND BUILDING DEADLOADS.

SHEET INDEX: Ⓗ

1. EME6625D & CD50 ASSEMBLIES AND SECTION
2. EME6625D & CD50 ASSEMBLIES AND SECTION
3. EME6625D MOISTURE BLADE
4. EME6625D HEAD FRAME
5. EME6325D SILL FRAME
6. EME6625D & CD50 ASSEMBLIES AND SECTIONS
7. EME6625D & CD50 FASTENER LOADS
8. CD50 ASSEMBLY WITH INTERNAL HAND QUAD
9. CD50 STANDARD DAMPER ASSEMBLY
10. CD50 TOP AND BOTTOM FRAME
11. CD50 SIDE FRAME
12. CD50 BLADE
13. ALUM FRAME CORNER CLIP
14. CONTROL DAMPER BLADE SEAL
15. BEARING AXLE .370LG W/ .120" FLANGE
16. F-SIDE LINKAGE CRANK ARM ASSEMBLY
17. CONCEALED LINKAGE PLATE
18. 7/16" HEX AXLE
19. 7/16" HEX IDLER AXLE
20. JAMB SEAL
21. LINKAGE TIE BAR
22. CONCEALED LINKAGE OVER-TRAVEL STOP
23. CRANK PIN
24. HAND QUAD CO50 DAMPER
25. AIRFOIL BLADE BRACKET
26. HAND QUAD ARM
27. U-BOLT
28. HAND QUADRANT PLATE
29. EME6625D ASSEMBLIES AND SECTIONS
30. EME6625D TEST LOUVERS - ROUND SHAPES
31. EME6625D TEST LOUVERS - ROUND SHAPES
32. EME6625D ASSEMBLY SECTION & DETAILS - CLIP ANGLE INSTALLATION
33. EME6625D TEST LOUVER - CLIP ANGLE INSTALLATION DETAILS

FOR OFFICE USE ONLY

PRODUCT REVISED
as complying with the Florida Building Code
Acceptance No 10-1104.05
Expiration Date 01/28/2012
By
Miami Dade Product Control

FOR FASTENER LOADS REF DWG. 60-021563-06D

SHEET 1 OF 38

CHANGE LETTER	REVISION DESCRIPTION	DWN. BY:	CHK'D. BY:	APPV'D. BY:	APPV'D. BY:	DATE
Ⓗ	ENGR. OF RECORD & SHEET NUMBER	VMA				
Ⓖ	ADDED SHEET NUMBER	DLC	DJR	DJR		5/23/7
Ⓕ	REVISE TITLE, SLEEVE AND MOUNTING ANGLE	RFM				10-17-06
Ⓔ	DADE CO. COMMENTS	GSL	VMA			10/15/98
Ⓓ	DADE CO. COMMENTS	RM	VMA			7-31-98
Ⓒ	ADDED NOTES	GSL	VMA			5/7/98
Ⓑ	ADDED ENGINEERING DATA & REV'D DETAILS	GSL	VMA			5/1/98
Ⓐ	REMOVED ENGINEERING DATA	JAL	VMA			4/17/98

ENGINEER OF RECORD: DANIEL J. RAU Ⓗ
ENGINEERING DISCIPLINE: CIVIL ENGINEER
REGISTRATION NUMBER: STATE OF FLORIDA #0063636
DWN. BY: GSL DATE: 3-13-98 | CHK. BY: VMA DATE: 3-16-98 | APPV'D. BY: DATE: | APPV'D. BY: DATE:
LOUVER DAMPER ASSY
DADE CTY. FLORIDA

RUSKIN Mfg 3900 DR. Greaves RD Grandview, MO 64030
PROPRIETARY INFORMATION
TITLE: EME6625D & CD50 ASSEMBLIES & SECTIONS
PLOT SCALE: NONE
DWG. CERTIFIED BY: DATE:
DWG. NO. 60-021563-00D

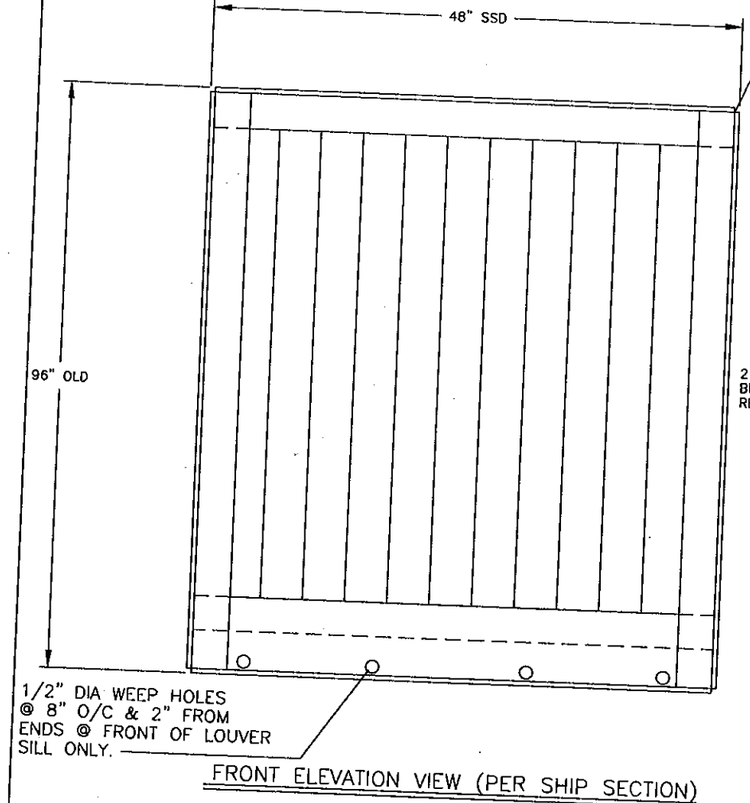

FRONT ELEVATION VIEW (PER SHIP SECTION)

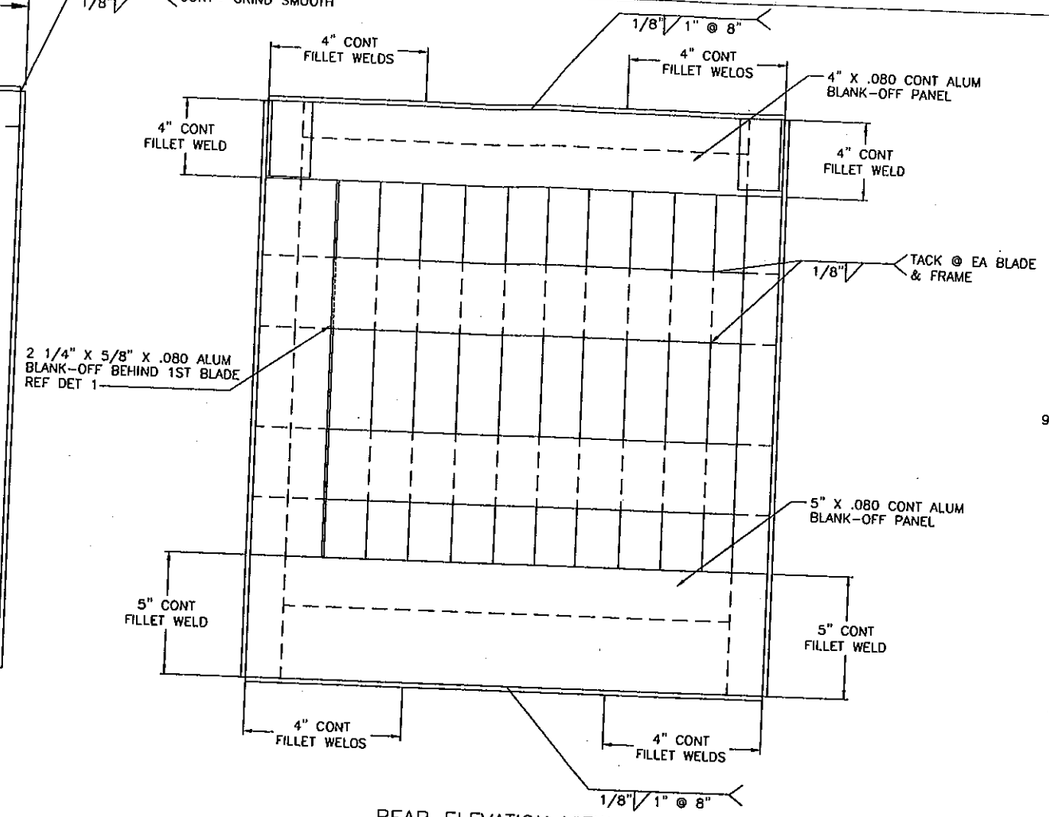

REAR ELEVATION VIEW

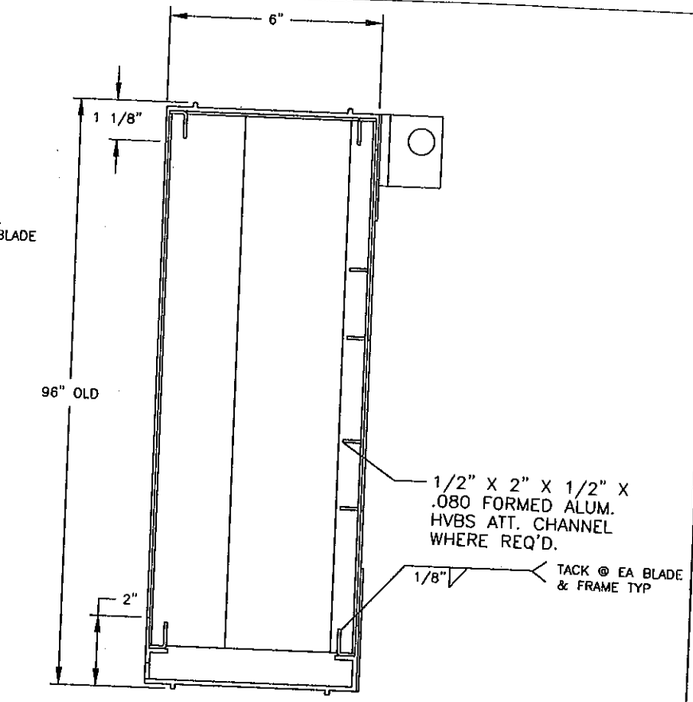

EME6625 SECTION

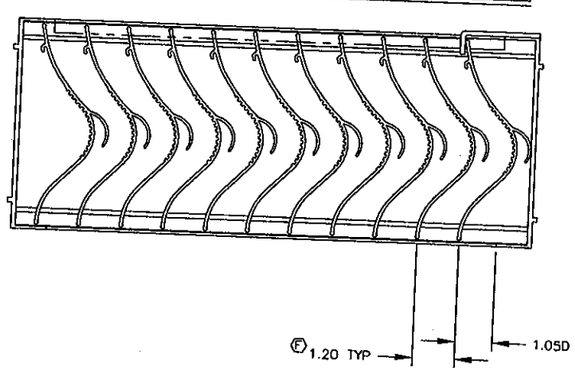

SECTION PLANVIEW

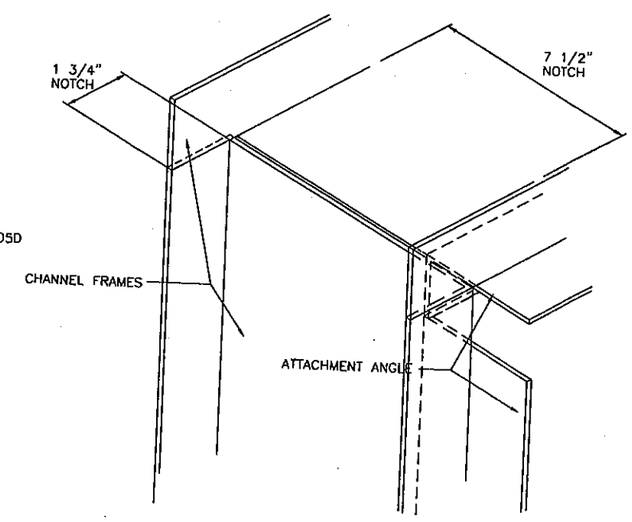

2 ISOMETRIC NOTCHING DETAIL
N.T.S.

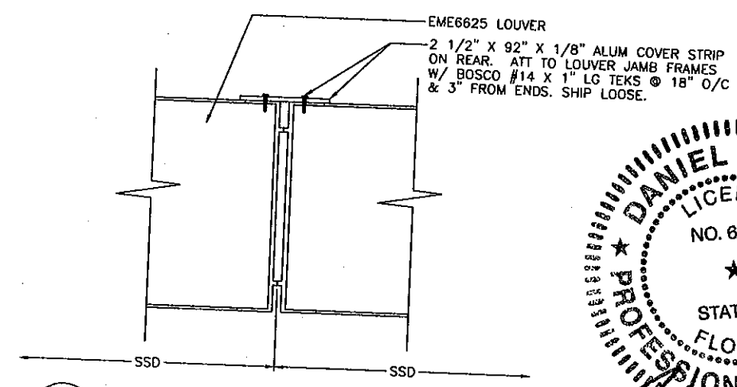

Ⓓ 3 MULLION SPLICE DETAIL
N.T.S.

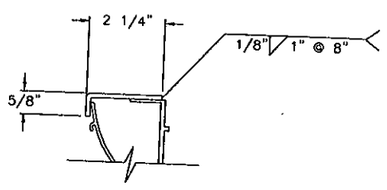

1 1ST BLADE JAMB BLANKOFF DETAIL
N.T.S.
MAT'L: .080 CONT FORMED ALUMINUM

DANIEL J. RAU
LICENSE NO. 63636
STATE OF FLORIDA
PROFESSIONAL ENGINEER
10/28/2010

SHEET 2 OF 38

FOR OFFICE USE ONLY

PRODUCT REVISED
as complying with the Florida Building Code
Acceptance No 10-1104.05
Expiration Date 01/28/2012
By
Miami Dade Product Control

CHANGE LETTER	REVISION DESCRIPTION	DWN. BY:	CHK'D. BY:	APP'D. BY:	APP'D. BY:	DATE
Ⓗ	ENGINEER OF RECORD AND SHEET NUMBER	VMA				
Ⓖ	ADDED SHEET NUMBER	DLC	DJR	DJR		5/23/7
Ⓕ	REVISED BLADE SPACING PER RETEST	DJR	VMA			7/11/06
Ⓓ	DADE CO. COMMENTS	RM	VMA			7-31-98
Ⓒ	REV'D DETAILS & ELEV.	GSL	VMA			5-7-98
Ⓑ	REV'D DETAILS & ADDED DETAILS 2 & 3	GSL	VMA			5-1-98
Ⓐ	REMOVED ENGINEERING DATA	JAL	VMA			4-17-98

ENGINEER OF RECORD: DANIEL J. RAU Ⓗ
ENGINEERING DISCIPLINE: CIVIL ENGINEER
REGISTRATION NUMBER: STATE OF FLORIDA #0063636

DWN. BY:	CHK. BY:	APP'D. BY:	APP'D. BY:
GSL	VMA		
DATE: 3-13-98	DATE: 3-16-98	DATE:	DATE:

LOUVER DAMPER ASSY
DADE CTY. FLORIDA

RUSKIN Mfg 3900 DR. Greaves RD Grandview, MO 64030
PROPRIETARY INFORMATION

PLOT SCALE: NONE
DWG. CERTIFIED BY: DATE:

TITLE: EME6625D & CD50 ASSEMBLIES & SECTIONS

DWG. NO. 60-021563-01D

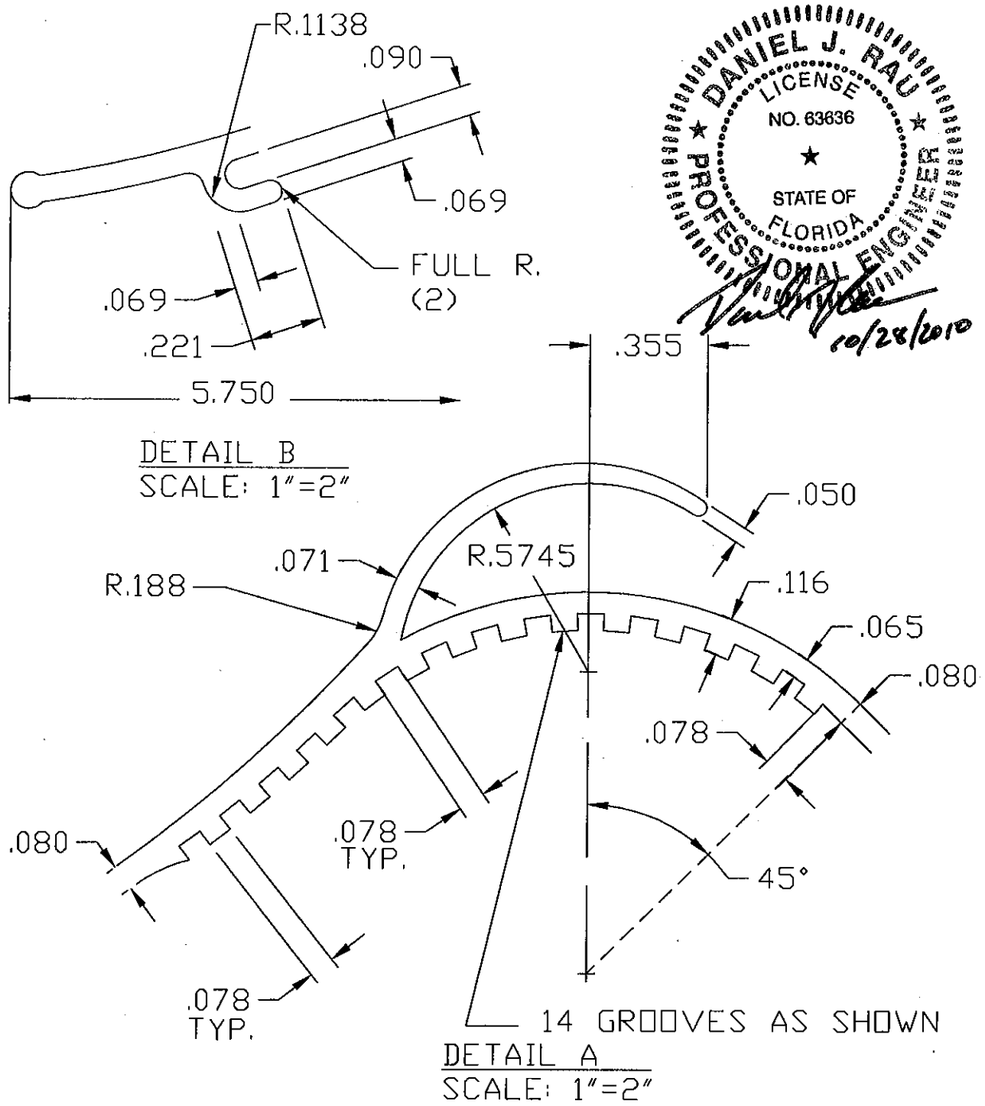

DANIEL J. RAU
LICENSE
NO. 63636
STATE OF
FLORIDA
PROFESSIONAL ENGINEER
10/28/2010

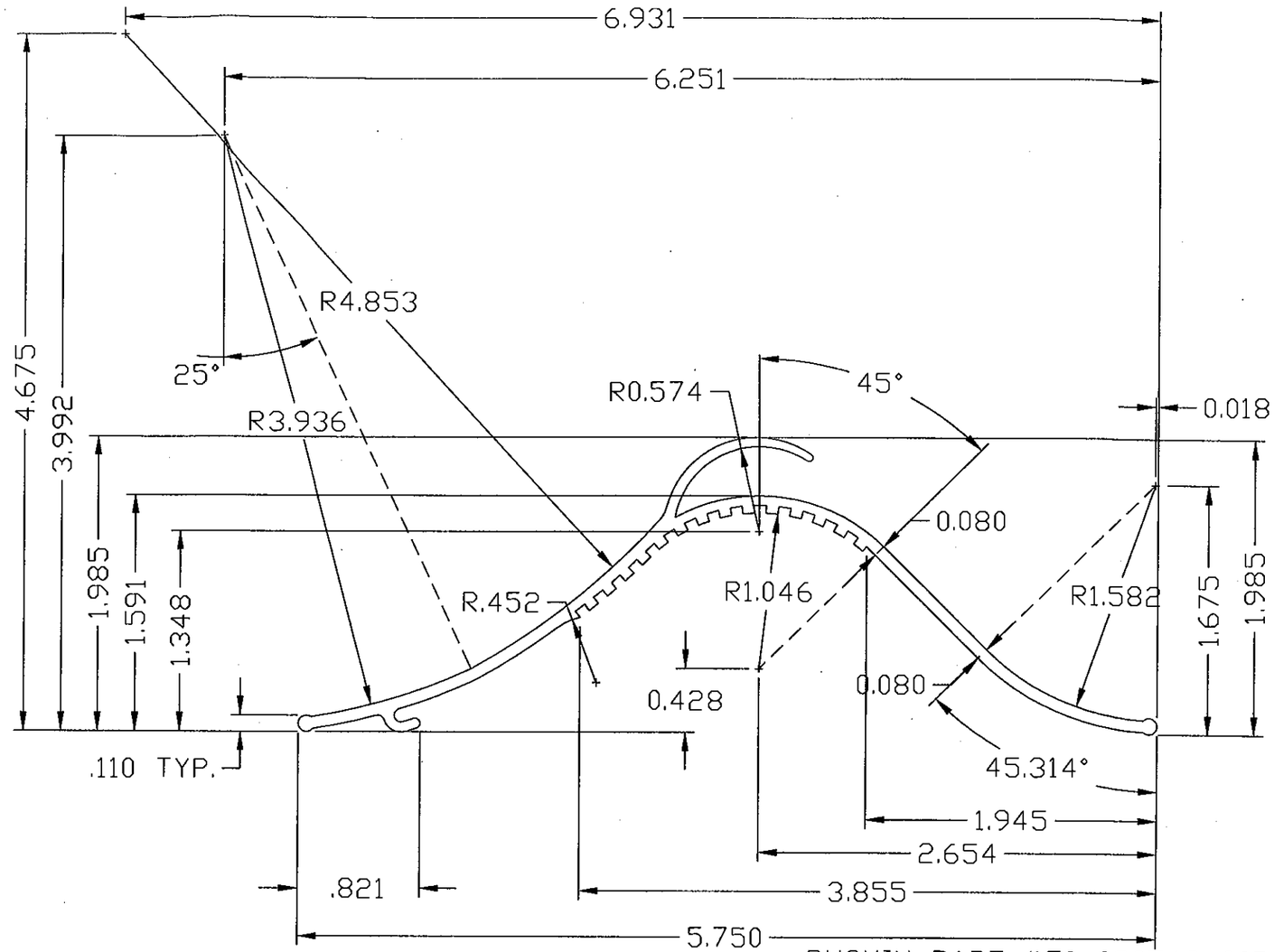

AREA= .673
PERIMETER= 17.839
WT. PER. FT.= .792

RUSKIN PART #70-020748-00B

SHEET 3 OF 38

NOTES:
1. ALUMINUM ASSOCIATION TOLLERANCES APPLY UNLESS OTHERWISE SPECIFIED.
2. 0.010" RADIUS AT ALL CORNERS UNLESS OTHERWISE SPECIFIED.
3. ALL DIMENSIONS ARE GIVEN IN INCHES.
4. INVENTORY NUMBER. 10790

CHANGE LETTER	REVISION DESCRIPTION	DWN. BY:	CHK'D. BY:	APPV'D. BY:	APPV'D. BY:	DATE
(H)	ENGINEER OF RECORD AND SHEET NUMBER	VMA				
(G)	ADDED SHEET NUMBER	DLC	DJR	DJR		5/23/7
(A)	REMOVED ENGINEERING DATA	JAL				

FOR OFFICE USE ONLY

PRODUCT REVISED
as complying with the Florida Building Code
Acceptance No 10-1104.05
Expiration Date 01/28/2012
By
Miami Dade Product Control

ENGINEER OF RECORD: DANIEL J. RAU (H)	DWN. BY: JKS	CHK. BY:	APPV'D. BY:	APPV'D. BY:
	DATE: 3-13-98	DATE:	DATE:	DATE:
ENGINEERING DISCIPLINE: CIVIL ENGINEER	MATERIAL: 6063T5 EXTRUDED ALUMINUM. NOM. WALL THICKNESS = .080			
REGISTRATION NUMBER: STATE OF FLORIDA #0063636				

RUSKIN Mfg 3900 DR. Greaves RD. Grandview, MO 64030
PROPRIETARY INFORMATION

PLOT SCALE: 1"=1"

DWG. CERTIFIED
BY:
DATE:

TITLE: EME6625D MOISTURE BLADE

DWG. NO. 60-021563-02B

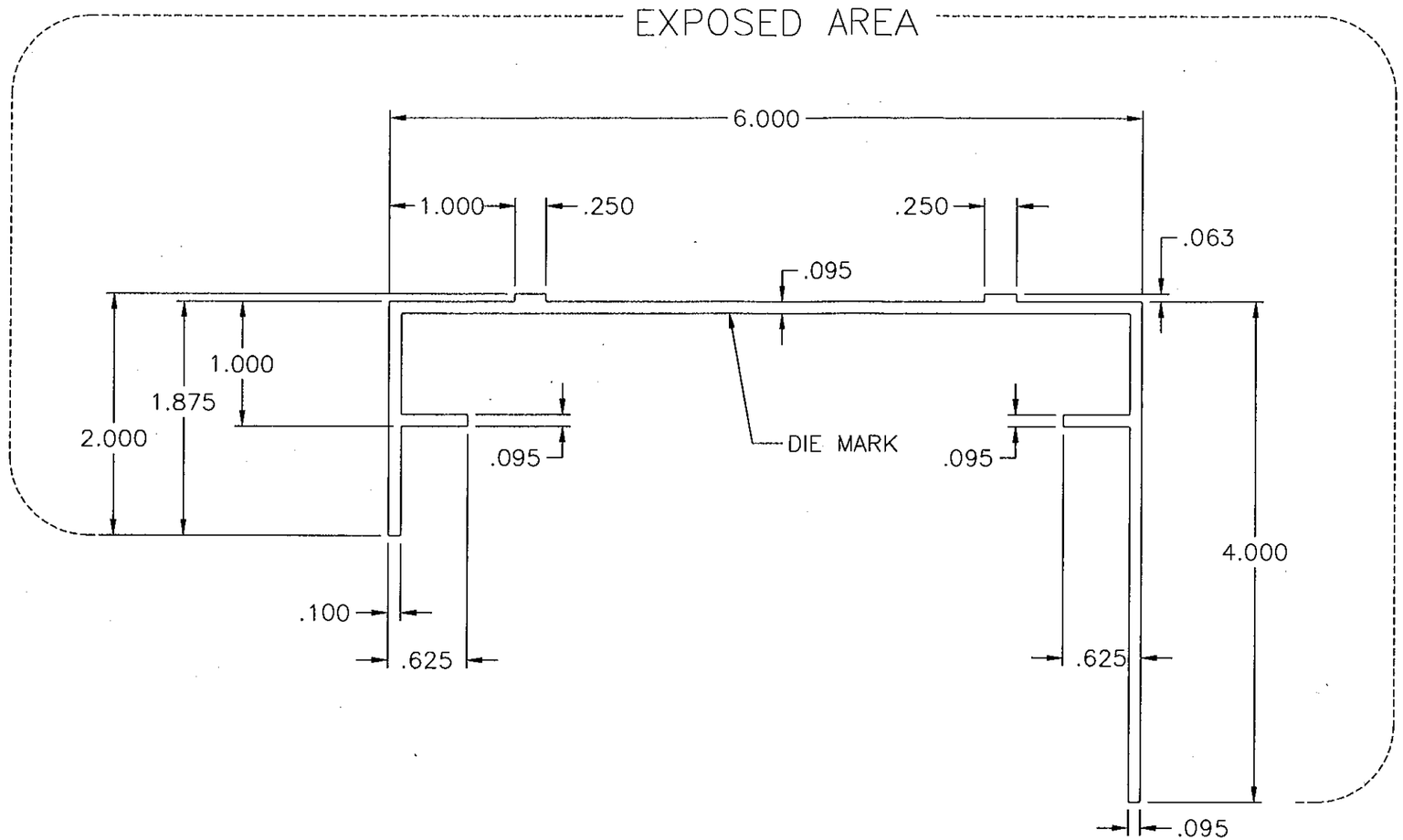

DANIEL J. RAU
LICENSE
NO. 63636
STATE OF
FLORIDA
PROFESSIONAL ENGINEER
10/28/2010

FOR OFFICE USE ONLY

PRODUCT REVISED
as complying with the Florida Building Code
Acceptance No 10-1109.05
Expiration Date 01/28/2012
By
Miami Dade Product Control

AREA= 1.250 SQ. IN.
PERIMETER= 26.12 IN.
EST. WEIGHT= 1.470 LBS/FT.

NOTES:

1. ALUMINUM ASSOCIATION TOLERANCES APPLY UNLESS OTHERWISE SPECIFIED.
2. 0.010" RADIUS AT ALL CORNERS UNLESS OTHERWISE SPECIFIED.
3. ALL DIMENSIONS ARE GIVEN IN INCHES.
4. INVENTORY NUMBER= 10820.

ENGINEER OF RECORD: DANIEL J. RAU			
ENGINEERING DISCIPLINE: CIVIL ENGINEER			
REGISTRATION NUMBER: STATE OF FLORIDA #0063636			
DWN. BY: JKS	CHK. BY: VMA	APPV'D. BY: G.L.	APPV'D. BY:
DATE: 11/20/96	DATE: 11/22/96	DATE: 11/22/96	DATE:
MATERIAL: 6063T6 EXTRUDED ALUMINUM NOM WALL THICKNESS = .095"			

SHEET 4 OF 38

RUSKIN PART #70-021995-00B

CHANGE LETTER	REVISION DESCRIPTION	DWN. BY:	CHK'D. BY:	APPV'D. BY:	APPV'D. BY:	DATE

RUSKIN Mfg. Grandview, MO PROPRIETARY INFORMATION	PLOT SCALE NONE	DWG. CERTIFIED BY: DATE:
TITLE EME6625D LOUVER HEAD FRAME	DWG. NO. 60-021563-03B	

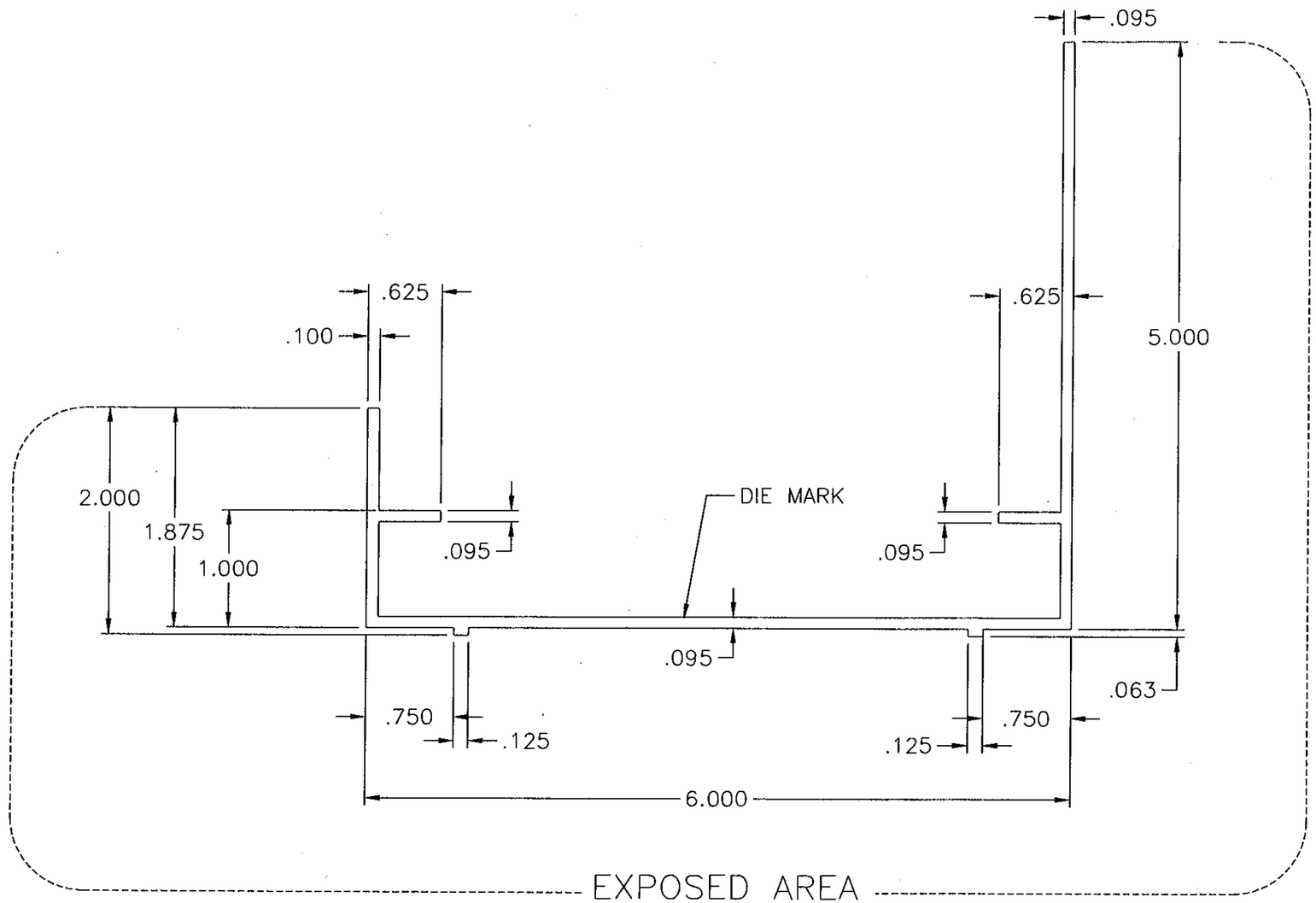

DANIEL J. RAU
LICENSE
NO. 63636
STATE OF
FLORIDA
PROFESSIONAL ENGINEER
10/28/2010

FOR OFFICE USE ONLY

PRODUCT REVISED
as complying with the Florida Building Code
Acceptance No 10-1104.05
Expiration Date 01/28/2012
By
Miami Dade Product Control

AREA= 1.318 SQ. IN.
PERIMETER= 27.948 IN.
EST. WEIGHT= 1.550 LBS/FT.

NOTES:

1. ALUMINUM ASSOCIATION TOLERANCES APPLY UNLESS OTHERWISE SPECIFIED.
2. 0.010" RADIUS AT ALL CORNERS UNLESS OTHERWISE SPECIFIED.
3. ALL DIMENSIONS ARE GIVEN IN INCHES.
4. INVENTORY NUMBER= 10820.

ENGINEER OF RECORD: DANIEL J. RAU			
ENGINEERING DISCIPLINE: CIVIL ENGINEER			
REGISTRATION NUMBER: STATE OF FLORIDA #0063636			
DWN. BY: JKS	CHK. BY: VMA	APPV'D. BY: G.L.	APPV'D. BY:
DATE: 11/20/96	DATE: 11/22/96	DATE: 11/22/96	DATE:

MATERIAL: 6063T6 EXTRUDED ALUMINUM NOM WALL THICKNESS = .095"

SHEET 5 OF 38

RUSKIN PART #70-020749-00B

CHANGE LETTER	REVISION DESCRIPTION	DWN. BY:	CHK'D. BY:	APPV'D. BY:	APPV'D. BY:	DATE

RUSKIN Mfg. Grandview, MO
PROPRIETARY INFORMATION

PLOT SCALE: NONE

DWG. CERTIFIED
BY:
DATE:

TITLE: EME6625D LOUVER SILL FRAME

DWG. NO. 60-021563-04B

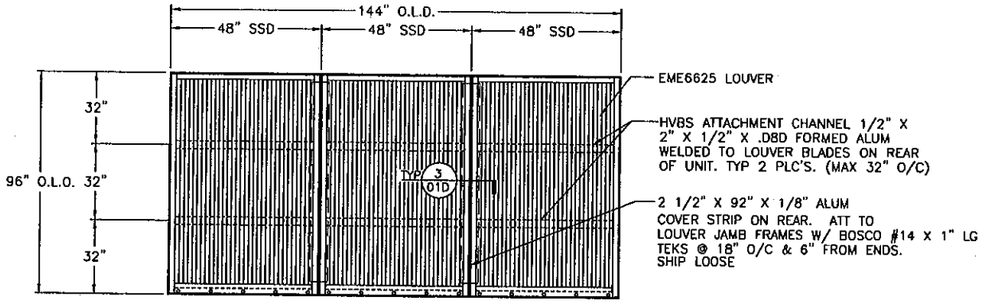

(E)(D) EME6625 LOUVER ASSEMBLY "B"
NTS
DESIGN PRESSURE RATING: +160/ -140 PSF
FRONT VIEW
(G) SEE SECTION DETAILS FOR APPLICABILITY

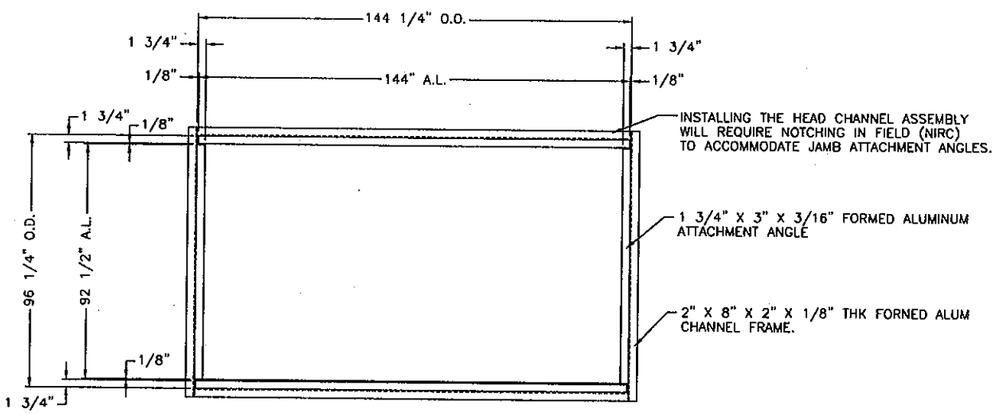

CHANNEL FRAME & ATT ANGLE ELEVATION
REAR VIEW

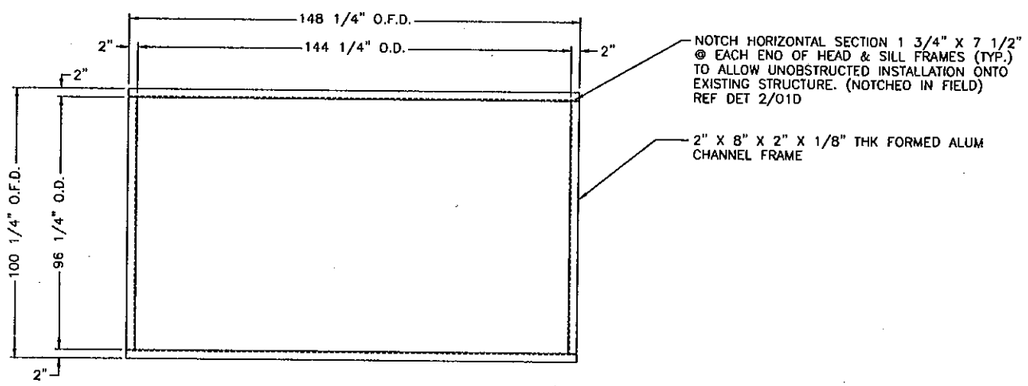

CHANNEL FRAME ELEVATION
FRONT VIEW

(1) REAR & FRONT ELEVATIONS VIEW OF CHANNEL FRAME & ATT. ANGLE
N.T.S.

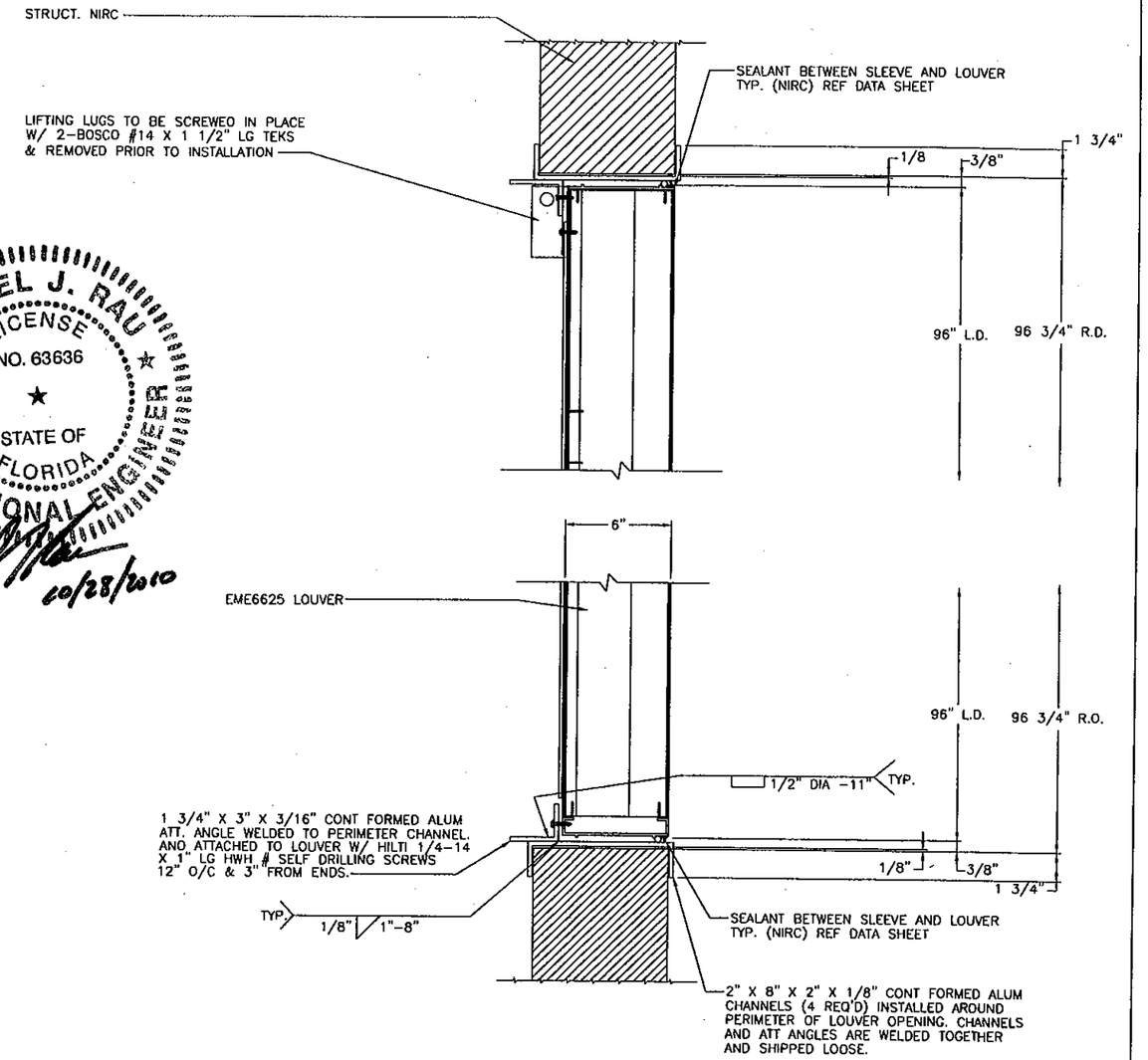

(D) EME6625/CD50 SLEEVED SECTION (JAMB SIM TO HEAD)
3"=1'-0"

DANIEL J. RAU
LICENSE
NO. 63636
STATE OF FLORIDA
PROFESSIONAL ENGINEER
10/28/2010

FOR FASTENER LOADS REF. DWG. 6D-021563-06D

SHEET 6 OF 38

LEGEND:

O.F.D.	= OUTSIDE FRAME DIM.	SSD	= SHIP SECTION DIM.
R.O.	= ROUGH OPENING	L.O.	= LOUVER DIM.
A.L.	= ANGLE LENGTH	DIM.	= DIMENSION
O.D.	= OPENING DIM.	SIM	= SIMILAR
N.T.S.	= NOT TO SCALE		

NOTES:

- THE STRUCTURAL SUBSTRATE THAT HOLDS THE LOUVER IN PLACE, IS ASSUMED TO BE STRUCTURALLY SOUND AND STABLE TO TAKE THE LOADS DISPERSED BY THE LOUVER.
- LOUVER IS NONBEARING AND IS NOT DESIGNED TO WITHSTAND BUILDING DEADLOADS.

FOR OFFICE USE ONLY

PRODUCT REVISED
as complying with the Florida Building Code
Acceptance No 10-1104.05
Expiration Date 01/28/2012
By
Miami Dade Product Control

CHANGE LETTER	REVISION DESCRIPTION	DWN. BY:	CHK'D. BY:	APPV'D. BY:	APPV'D. BY:	DATE
(H)	ENGINEER OF RECORD AND SHEET NUMBER	VMA				
(G)	ADDED SHEET NUMBER	DLC	DJR	DJR		5/23/7
(E)	DADE CO. COMMENTS	RM	VMA			10/15/98
(D)	DADE CO. COMMENTS	RM	VMA			7-31-98
(C)	REV'D DETAILS & ELEVATIONS ADDED NOTES	GSL	VMA			5-7-98
(B)	REV'D DETAILS & ELEVATIONS	GSL	VMA			5-1-98
(A)	REMOVED ENGINEERING DATA	JAL	VMA			4-17-98

ENGINEER OF RECORD: DANIEL J. RAU (H)
ENGINEERING DISCIPLINE: CIVIL ENGINEER
REGISTRATION NUMBER: STATE OF FLORIDA #0063636

DWN. BY:	CHK. BY:	APPV'D. BY:	APPV'D. BY:
GSL	VMA		
DATE: 5-13-98	DATE: 5-16-98	DATE:	DATE:

LOUVER DAMPER ASSY
DADE CTY. FLORIDA

RUSKIN Mfg 3900 DR. Greaves RD. Grandview, MO 64030
PROPRIETARY INFORMATION

TITLE: EME66250 & CO50 ASSEMBLIES & SECTIONS

PLOT SCALE: NONE

DWG. CERTIFIED BY:
DATE:

DWG. NO. 60-021563-05D

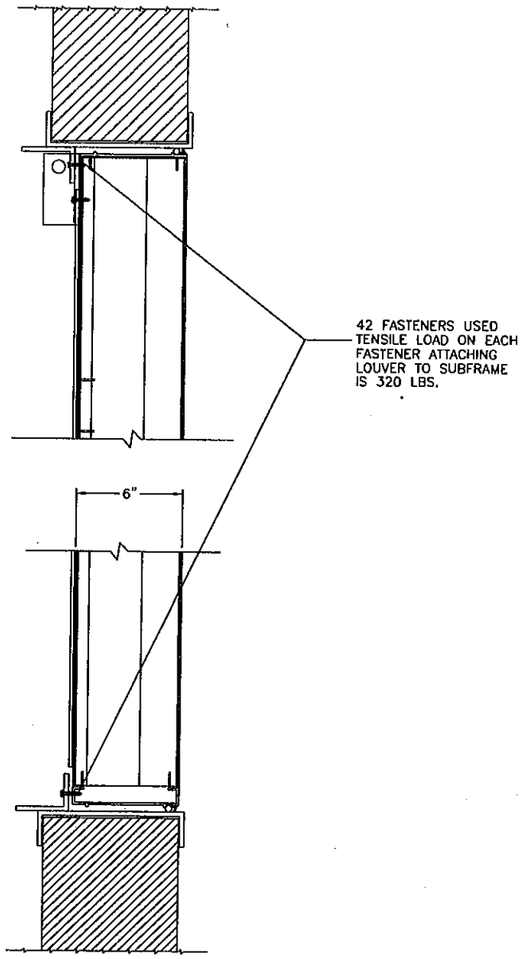

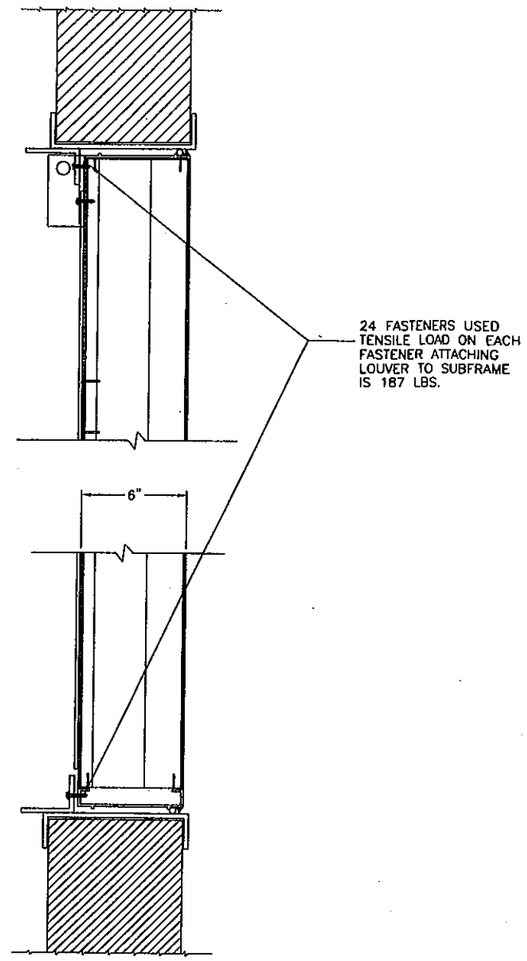

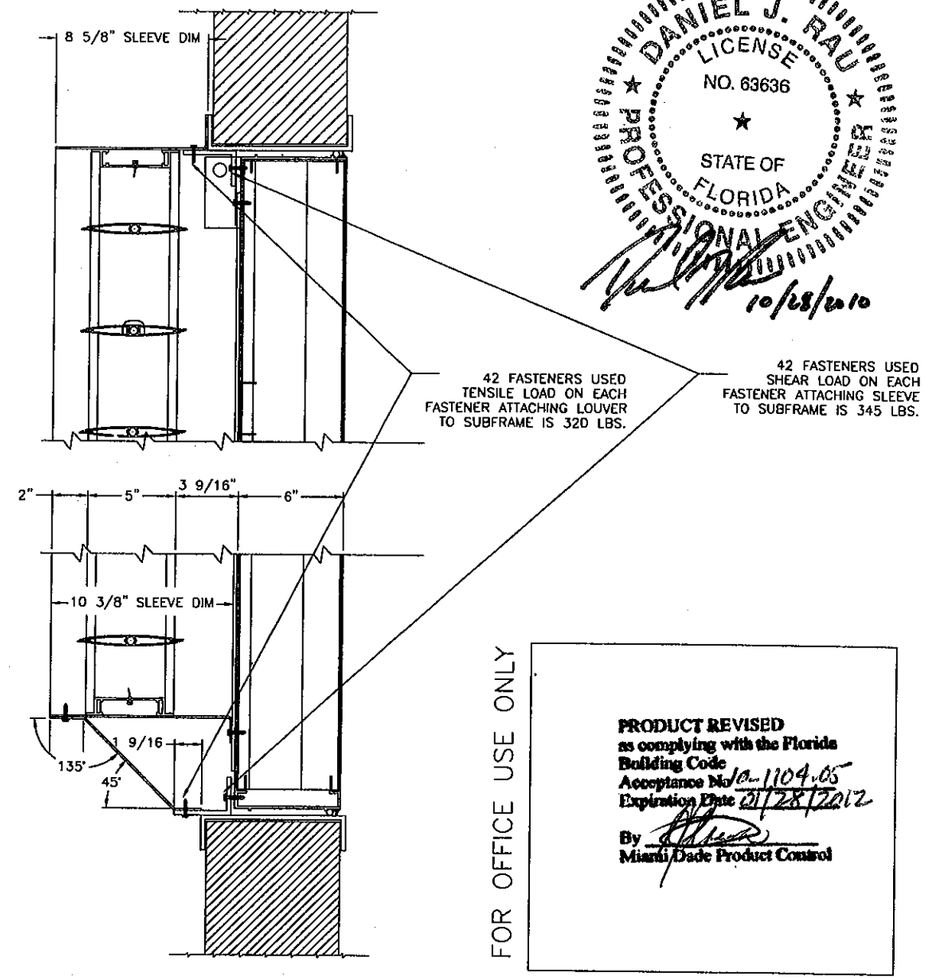

DANIEL J. RAU
LICENSE NO. 63636
STATE OF FLORIDA
PROFESSIONAL ENGINEER
10/28/2010

FOR OFFICE USE ONLY

PRODUCT REVISED
as complying with the Florida Building Code
Acceptance No 10-1104.05
Expiration Date 01/28/2012
By _____
Miami-Dade Product Control

(F)(E) LOUVER ONLY ASSEMBLIES "B" (+160/ −140 PSF)
N.T.S.

(G) The EME6625D louver can be installed in locations where space behind the louver is not designed to drain or accept water if ductwork is attached to the rear of the louver. The ductwork must be designed to manage the 7.68 oz. of water penetration allowed during the TAS−100(A) Wind Driven Rain Test. This application is Rated For Water.
If no ductwork is to be installed to the louver, the louver must be installed in locations where the area behind is designed to drain or accept water. This application is Not Rated For Water.

(F)(E) LOUVER ONLY ASSEMBLIES "C" (+160/ −140 PSF)
N.T.S.

(G) The EME6625D louver can be installed in locations where space behind the louver is not designed to drain or accept water if ductwork is attached to the rear of the louver. The ductwork must be designed to manage the 7.68 oz. of water penetration allowed during the TAS−100(A) Wind Driven Rain Test. This application is Rated For Water.
If no ductwork is to be installed to the louver, the louver must be installed in locations where the area behind is designed to drain or accept water. This application is Not Rated For Water.

(F)(E) LOUVER/DAMPER ASS'Y "A" (+160/ −140PSF)
N.T.S.

CAN BE INSTALLED IN LOCATIONS WHERE SPACE BEHIND LOUVER IS NOT DESIGNED TO ACCEPT WATER.
MEETS WATER REQUIREMENTS

ULTIMATE PULL OUT VALUES FOR 1/4−14 SELF−TAPPING FASTENERS IN 1/8" ALUMINUM IS 825 LBS.(SAFETY FACTOR OF 3.) ALLOWABLE SHEAR LOAD IS 405 LBS., SEE HILTI PRODUCT TECHNICAL GUIDE 8/'96, P136.

(F) THE EME6625 AND THE EME6625 WITH CD50 DAMPER, FURNISHED BY RUSKIN MANUFACTURING, CONFORM TO THE CURRENT FLORIDA BUILDING CODE INCLUSIVE OF CHAPTER 16.

SHEET 7 OF 38

CHANGE LETTER	REVISION DESCRIPTION	DWN. BY:	CHK'D. BY:	APP'V'D. BY:	APP'V'D. BY:	DATE
(H)	ENGINEER OF RECORD AND SHEET NUMBER	VMA				
(G)	ADDED SHEET NUMBER REV'D APPLICATION INFO	DLC	DJR	DJR		5/23/7
(F)	REV'D PER DADE COUNTY COMMENTS	DJR	VMA			7/11/06
(E)	REV'D DETAILS	GSL	VMA			10-15-98
(B)	REV'D DETAILS & ADDED ENG DATA	GSL	VMA			5-1-98
(A)	REMOVED ENGINEERING DATA	JAL	VMA			4-17-98

ENGINEER OF RECORD: DANIEL J. RAU (H)
ENGINEERING DISCIPLINE: CIVIL ENGINEER
REGISTRATION NUMBER: STATE OF FLORIDA #0063636

DWN. BY:	CHK. BY:	APP'V'D. BY:	APP'V'D. BY:
GSL	VMA		
DATE: 3-13-98	DATE: 3-16-98	DATE:	DATE:

RUSKIN Mfg 3900 DR. Greaves RD Grandview, MO 64030
PROPRIETARY INFORMATION

TITLE: LOUVER DAMPER ASSY DADE CTY. FLORIDA

TITLE: EME6625D & CD50 FASTENER LOADS

PLOT SCALE: NONE

DWG. CERTIFIED BY: _____ DATE: _____

DWG. NO. 60-021563-06D

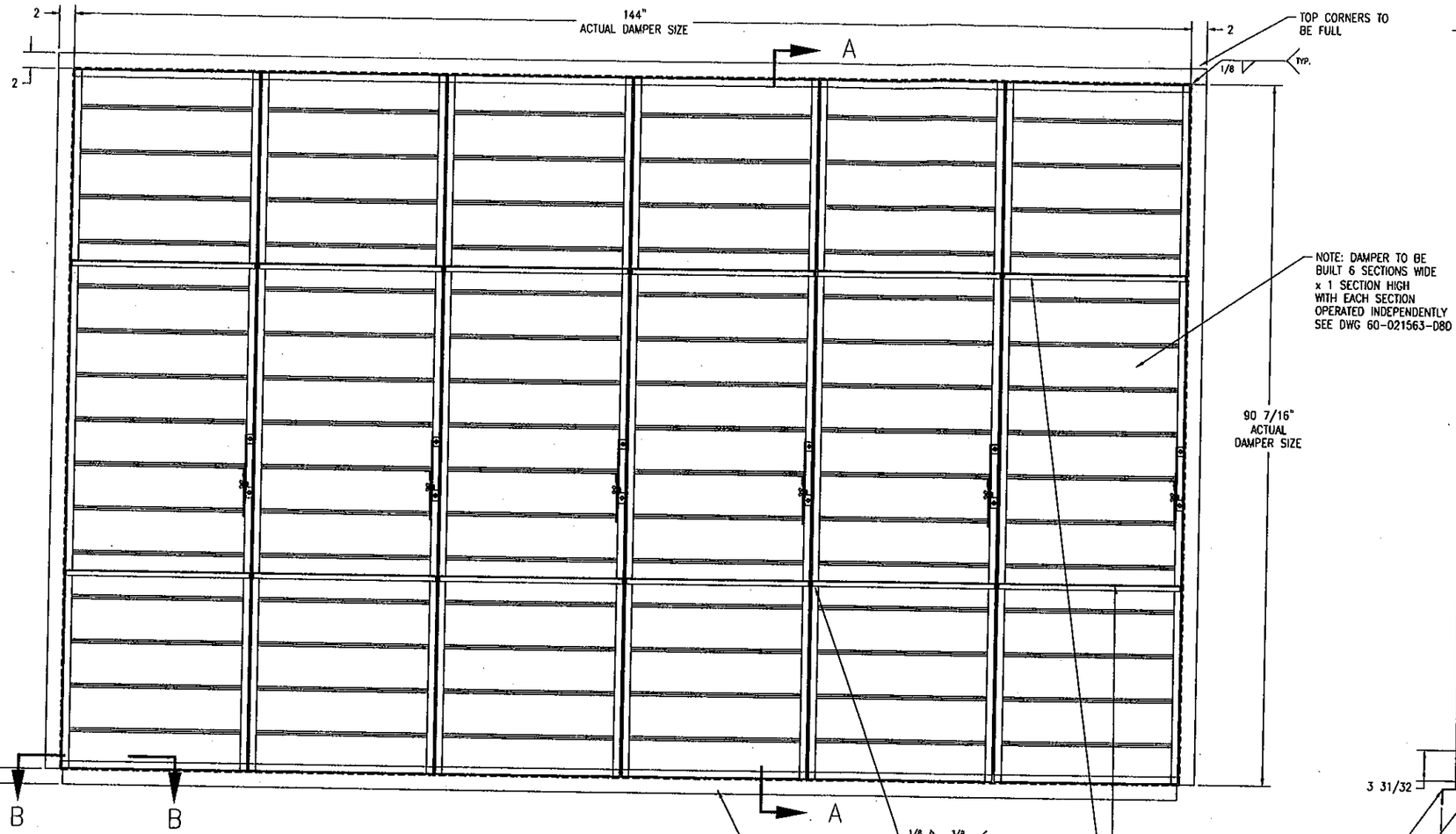

FRONT VIEW

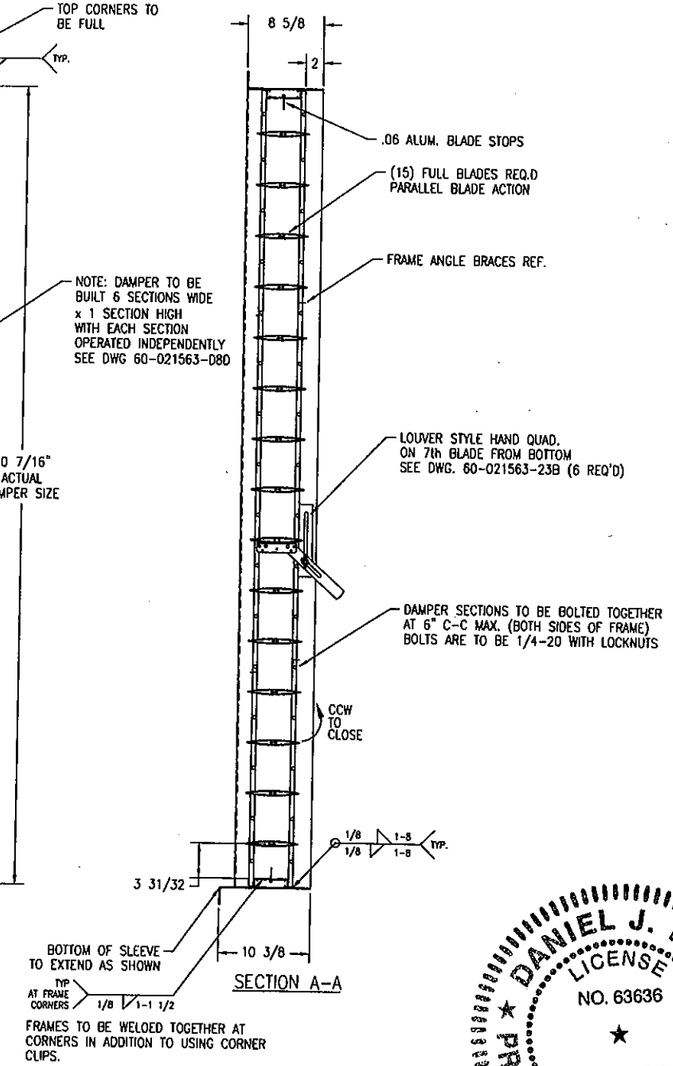

SECTION A-A

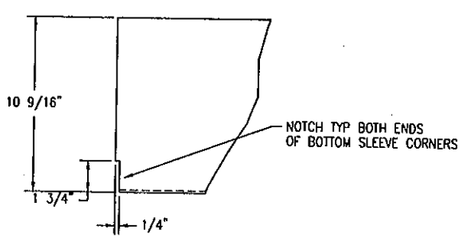

SECTION B-B

FOR OFFICE USE ONLY

PRODUCT REVISED
as complying with the Florida Building Code
Acceptance No 10-1104.05
Expiration Date 01/28/2012
By
Miami Dade Product Control

DANIEL J. RAU
LICENSE
NO. 63636
STATE OF FLORIDA
PROFESSIONAL ENGINEER
10/28/2010

SHEET 8 OF 38

UNLESS OTHERWISE SPECIFIED USE STANDARD ENGINEERING TOLERANCES

H	ENGINEER OF RECORD AND SHEET NUMBER	DLC				
G	ADDED SHEET NUMBER	DLC	DJR	DJR		5/23/7
B	REMOVED ENGINEERING DATA	JAL	VMA			5-1-98
A	REMOVED ENGINEERING DATA	JAL	VMA			4-17-98
CHANGE LETTER	REVISION DESCRIPTION	DWN. BY:	CHK'D. BY:	APP'D. BY:	APP'D. BY:	DATE

ENGINEER OF RECORD: DANIEL J. RAU (H)
ENGINEERING DISCIPLINE: CIVIL ENGINEER
REGISTRATION NUMBER: STATE OF FLORIDA #0063636

DWN. BY:	CHK. BY:	APPV'D. BY:	APPV'D. BY:
DDM	JSB	DVC	
DATE: 4/2/98	DATE: 4/13/98	DATE: 4/13/97	DATE:

LOUVER DAMPER ASSEMBLY
DADE COUNTY, FLORIDA

RUSKIN Mfg. Grandview, MO
PROPRIETARY INFORMATION

TITLE: CD-50 ASSEMBLY WITH INTERNAL HAND QUAD.

PLOT SCALE: NONE
DWG. CERTIFIED BY: DATE:
DWG. NO. 60-021563-07D

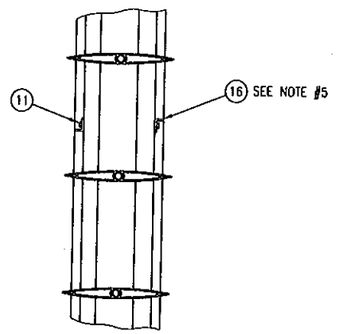

FRAME BRACE DETAIL
UNITS OVER 48" "B" DIM.

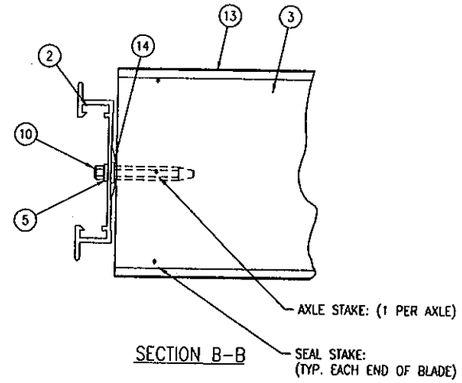

SECTION B-B

ITEM	DWG. NO.	DESCRIPTION
1	60-021563-09B	FRAME: TOP & BOTTOM
2	60-021563-10B	FRAME: SIDE
3	60-021563-11B	BLADE:
4	60-021563-12B	CORNER CLIP:
5	60-021563-14B	BEARING: SYNTHETIC
6	60-021563-20B	TIEBAR: 1/2" WIDE x 12 GA. GALV.
7		TRUARC RING: (PLTD.) E-25
8	60-021563-15B	"F" LINKAGE ASSEMBLY:
9	60-021563-21B	OVERTRAVEL STOP: 16 GA. GALV.
10	60-021563-18B	IDLER AXLE: (PLTD)
11		TEK SCREW: #10 x 3/4" LG. (PLTD)
12		TRUARC RING: (PLTD.) E-50
13	60-021563-13B	BLADE SEAL: SANTOPRENE
14	60-021563-19B	JAMB SEAL: STN. STL.
15		TRAVEL STOP: 1 1/4"X 1"X 3/4"X .06 ALUM.
16	Ⓓ	FRAME BRACE: 3/4" x 3/4" x 1/8" thk. ALUM. ANGLE
17		
18		
18		
20		
21		
22		
23		
24		
25		

DANIEL J. RAU
LICENSE
NO. 63636
STATE OF
FLORIDA
PROFESSIONAL ENGINEER
10/28/2010

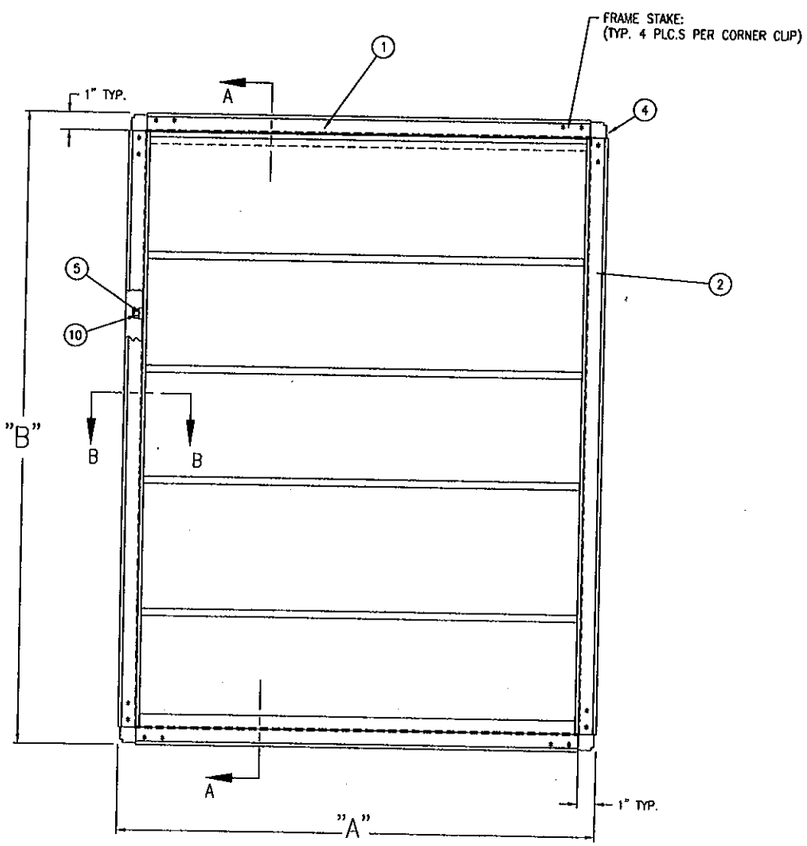

FACE VIEW
SHOWN CLOSED

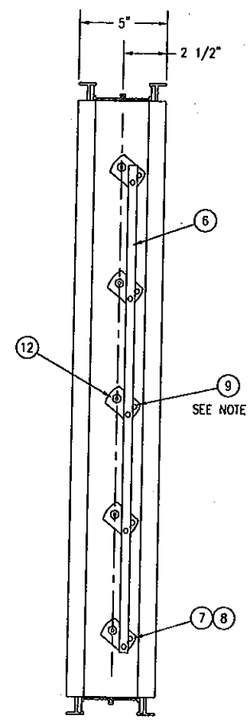

RIGHT SIDE VIEW
PARALLEL BLADE
SHOWN CLOSED

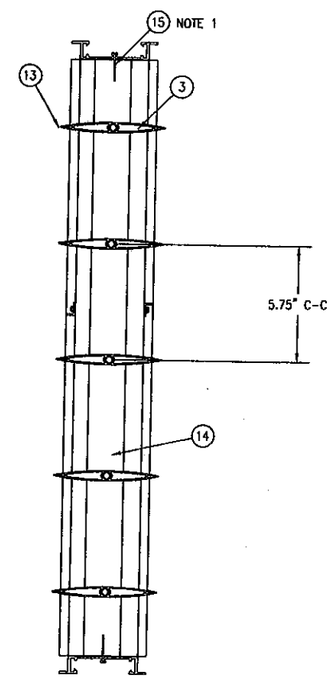

SECTION A-A
SHOWN OPEN

NOTES:

1. TRAVEL STOP (ITEM 15) TO BE CENTERED ALONG BLADE LENGTH WITH 1" LEG ATTACHED TO FRAME BY 1/16" WELDS, # 10 TEK SCREWS OR 3/16" RIVETS. 1 1/4" LEG TO BE 1/16" AWAY FROM BLADE IN FULLY CLOSED POSITION.
2. BLADE LENGTH TO BE 9/32" LESS THAN INSIDE FRAME DIM.
3. FRAMES TO BE CAULKED AT CORNERS.
4. ONE OVER TRAVEL STOP (ITEM 9) REQUIRED ON P.B. DAMPERS ONLY.
5. FRAME BRACE (ITEM #16) IS REQUIRED ON ALL UNITS ABOVE 48" 'B' DIMENSION, LOCATED APPROXIMATELY CENTER OF DAMPER FRONT AND BACK SIDES.

FOR OFFICE USE ONLY

PRODUCT REVISED
as complying with the Florida Building Code
Acceptance No 10-1104.05
Expiration Date 01/28/2012
By _____
Miami-Dade Product Control

SHEET 9 OF 38

CHANGE LETTER	REVISION DESCRIPTION	DWN. BY:	CHK'D. BY:	APPV'D. BY:	APPV'D. BY:	DATE
Ⓗ	ENGINEER OF RECORD AND SHEET NUMBER	VMA				
Ⓖ	ADDED SHEET NUMBER	DLC	DJR	DJR		5/23/7
Ⓓ	DADE CO. COMMENTS	RM	VMA			7-31-98
Ⓑ	ADDED ENGINEERING DATA	GSL	VMA			5-1-98
Ⓐ	REMOVED ENGINEERING DATA	JAL	VMA			4-17-98

ENGINEER OF RECORD: DANIEL J. RAU Ⓗ
ENGINEERING DISCIPLINE: CIVIL ENGINEER
REGISTRATION NUMBER: STATE OF FLORIDA #0063636

DWN. BY:	CHK. BY:	APPV'D. BY:	APPV'D. BY:
DDM	JSB	DVC	
DATE: 4/2/98	DATE: 4/13/98	DATE: 4/13/98	DATE:

DADE COUNTY, FLORIDA

AUSKIN Mfg. Grandview, MO
PROPRIETARY INFORMATION

PLOT SCALE: NONE
DWG. CERTIFIED BY: ____ DATE: ____

TITLE: CD-50 STANDARD DAMPER ASSEMBLY

DWG. NO. 60-021563-08D

UNLESS OTHERWISE SPECIFIED USE STANDARD ENGINEERING TOLERANCES

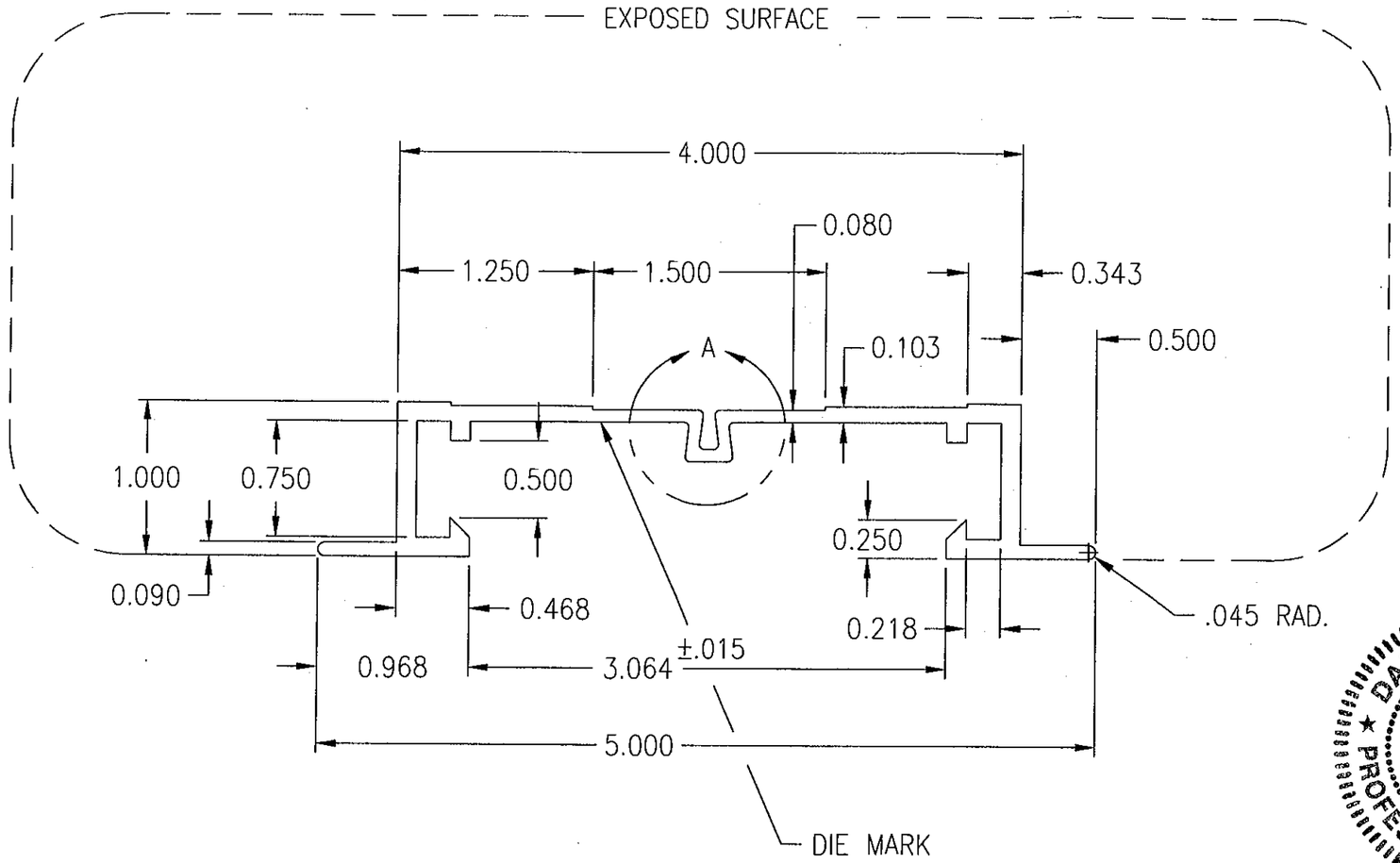

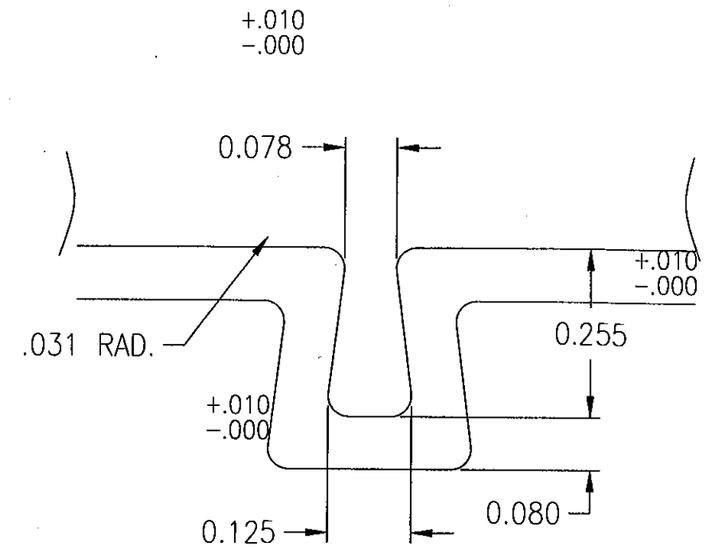

DETAIL A

NOTES:

1. ALUMINUM ASSOC. TOLERANCES APPLY UNLESS NOTED OTHERWISE
2. MAX. RISE AT CORNERS OF 4" WEB TO BE NO GREATER THAN .020

DANIEL J. RAU
LICENSE
NO. 63636
STATE OF
FLORIDA
PROFESSIONAL ENGINEER
10/29/2010

FOR OFFICE USE ONLY

PRODUCT REVISED
as complying with the Florida
Building Code
Acceptance No 10-1104.05
Expiration Date 01/28/2012
By
Miami Dade Product Control

SHEET 10 OF 38

CHANGE LETTER	REVISION DESCRIPTION	DWN. BY:	CHK'D. BY:	APPV'D. BY:	APPV'D. BY:	DATE
H	ENGINEER OF RECORD AND SHEET NUMBER	VMA				
G	ADDED SHEET NUMBER	DLC	DJR	DJR		5/23/7
A	REMOVED ENGINEERING DATA	JAL				

ENGINEER OF RECORD: DANIEL J. RAU (H)			
ENGINEERING DISCIPLINE: CIVIL ENGINEER			
REGISTRATION NUMBER: STATE OF FLORIDA #0063636			
DWN. BY: DDM	CHK. BY: JSB	APPV'D. BY: DVC	APPV'D. BY:
DATE: 4/2/98	DATE: 4/6/98	DATE: 4/13/98	DATE:

MAT'L. 6063-T52 EXTRUDED ALUMINUM
TYP. WALL THK. .125 UNLESS NOTED

RUSKIN Mfg.
air handling specialties
3900 DR. GREAVES RD. GRANDVIEW MO 64030

PLOT SCALE: NONE

DWG. CERTIFIED
BY:
DATE:

TITLE: CD-50 TOP AND BOTTOM FRAME

DWG. NO. 60-021563-09B

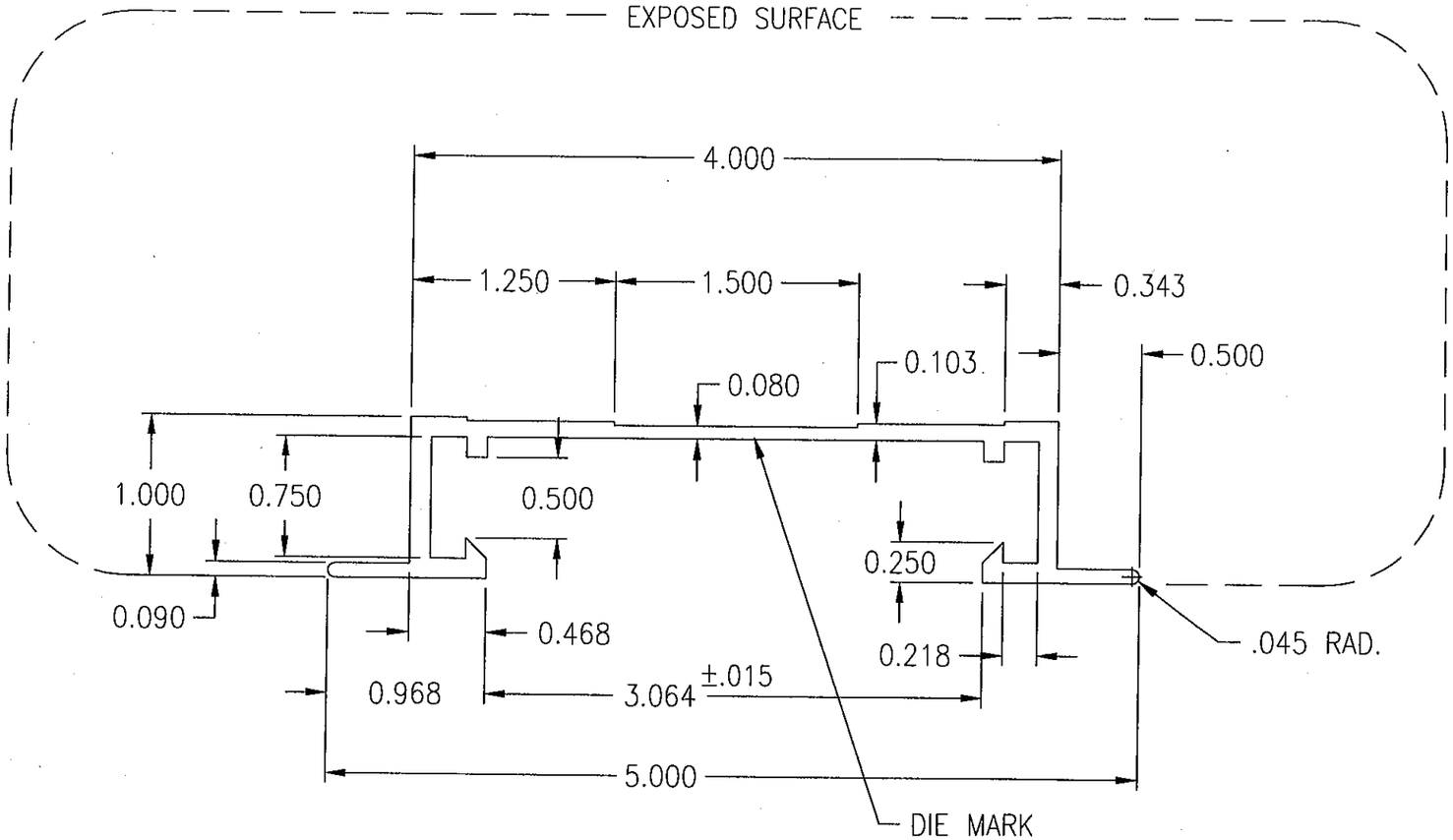

NOTES:

1. ALUMINUM ASSOC. TOLERANCES APPLY UNLESS NOTED OTHERWISE
2. MAX. RISE AT CORNERS OF 4" WEB TO BE NO GREATER THAN .020

DANIEL J. RAU
LICENSE NO. 63636
STATE OF FLORIDA
PROFESSIONAL ENGINEER
10/28/2010

FOR OFFICE USE ONLY

PRODUCT REVISED
as complying with the Florida Building Code
Acceptance No 10-1104.05
Expiration Date 01/28/2012
By
Miami Dade Product Control

SHEET 11 OF 38

H	ENGINEER OF RECORD AND SHEET NUMBER	VMA				
G	ADDED SHEET NUMBER	DLC	DJR	DJR		5/23/7
A	REMOVED ENGINEERING DATA	JAL				
CHANGE LETTER	REVISION DESCRIPTION	DWN. BY:	CHK'D. BY:	APPV'D. BY:	APPV'D. BY:	DATE

ENGINEER OF RECORD: DANIEL J. RAU (H)

ENGINEERING DISCIPLINE: CIVIL ENGINEER

REGISTRATION NUMBER: STATE OF FLORIDA #0063636

DWN. BY:	CHK. BY:	APPV'D. BY:	APPV'D. BY:
DDM	JSB	DVC	
DATE: 4/2/98	DATE: 4/6/98	DATE: 4/13/98	DATE:

MAT'L. 6063-T52 EXTRUDED ALUMINUM
TYP. WALL THK. .125 UNLESS NOTED

RUSKIN Mfg.
air handling specialties
3900 DR. GREAVES RD. GRANDVIEW MO 64030

TITLE: CD-50 SIDE FRAME

PLOT SCALE: NONE

DWG. CERTIFIED
BY:
DATE:

DWG. NO. 60-021563-10B

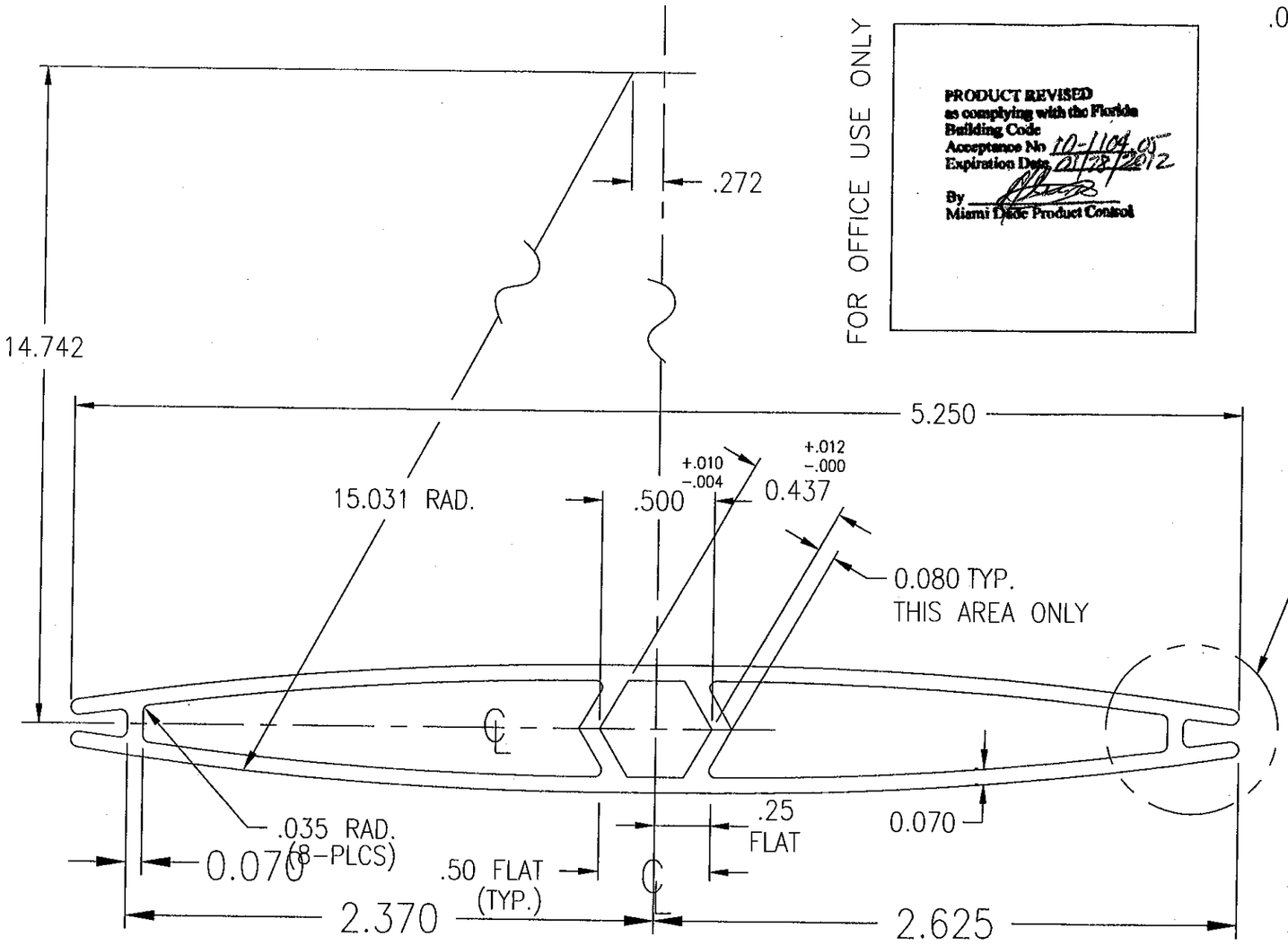

SCALE: 1.5X

FOR OFFICE USE ONLY

PRODUCT REVISED
as complying with the Florida
Building Code
Acceptance No 10-1104.05
Expiration Date 01/28/2012
By
Miami Dade Product Control

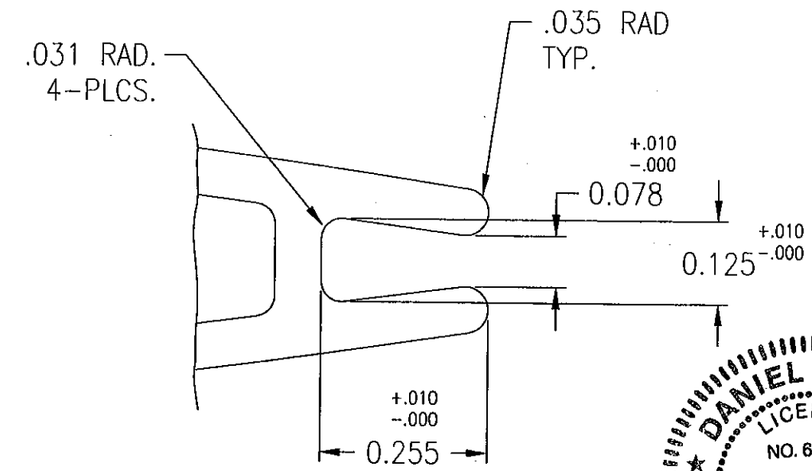

DETAIL A
SCALE: 4X

DANIEL J. RAU
LICENSE
NO. 63636
STATE OF
FLORIDA
PROFESSIONAL ENGINEER
10/28/2010

SEE DETAIL A

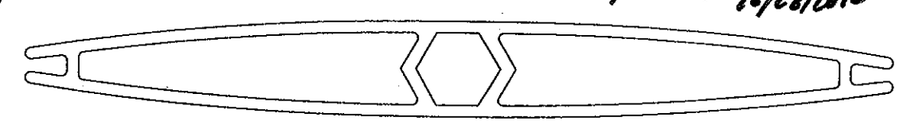

ACTUAL SIZE

SHEET 12 OF 38

NOTE:
1. USE STANDARD ALUMINUM ASSOCIATION TOLERANCES WILL APPLY UNLESS OTHERWISE SPECIFED.

TOLERANCES:
UNLESS OTHERWISE SPECIFIED
DIMENSIONS:
WITH 2 DECIMAL PLACES. ±.020
WITH 3 DECIMAL PLACES, ±.010
FRACTION DIMENSIONS AS MARKED.

ENGINEER OF RECORD: DANIEL J. RAU (H)						
ENGINEERING DISCIPLINE: CIVIL ENGINEER						
REGISTRATION NUMBER: STATE OF FLORIDA #0063636						
DWN. BY: DDM	CHK. BY: JSB	APPV'D. BY: DVC	APPV'D. BY:			
DATE: 4/2/98	DATE: 4/6/98	DATE: 4/13/98	DATE:			
MAT'L. 6063-T5 EXTRUDED ALUMINUM						

CHANGE LETTER	REVISION DESCRIPTION	DWN. BY:	CHK'D. BY:	APPV'D. BY:	APPV'D. BY:	DATE
(H)	ENGINEER OF RECORD AND SHEET NUMBER	VMA				
(G)	ADDED SHEET NUMBER	DLC	DJR	DJR		5/23/7
(A)	REMOVED ENGINEERING DATA	JAL				

RUSKIN Mfg. Grandview, MO
PROPRIETARY INFORMATION

PLOT SCALE: NONE

DWG. CERTIFIED
BY:
DATE:

TITLE: CD-50 BLADE

DWG. NO. 60-021563-11B

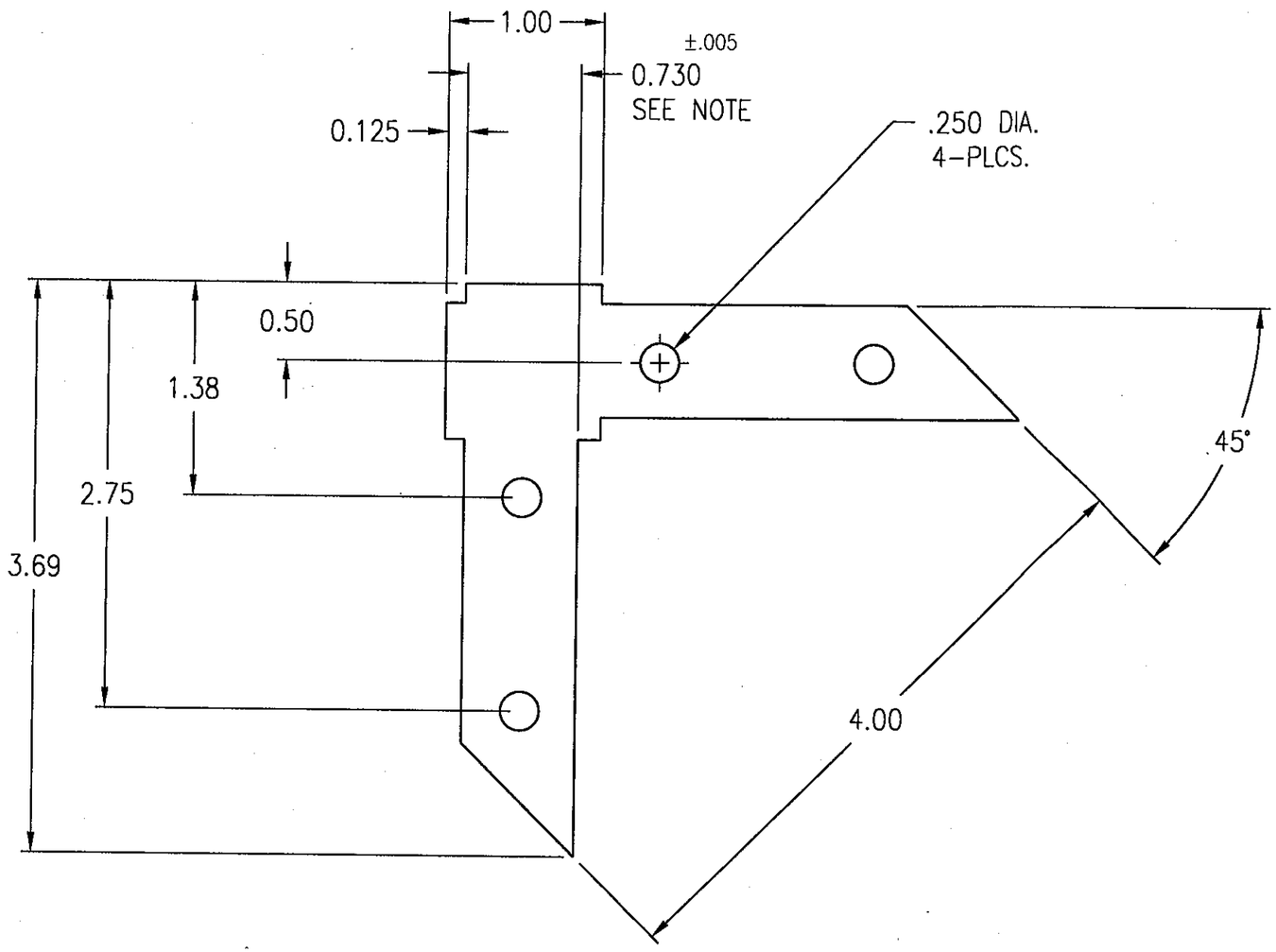

FOR OFFICE USE ONLY

PRODUCT REVISED
as complying with the Florida Building Code
Acceptance No. 10-1104.05
Expiration Date 01/28/2012
By
Miami-Dade Product Control

DANIEL J. RAU
LICENSE
NO. 63636
STATE OF
FLORIDA
PROFESSIONAL ENGINEER
10/28/2010

NOTE:
1. .730 DIMENSION IS CRITICAL.

SHEET 13 OF 38

H	ENGINEER OF RECORD AND SHEET NUMBER	VMA				
G	ADDED SHEET NUMBER	DLC	DJR	DJR		5/23/7
A	REMOVED ENGINEERING DATA	JAL				
CHANGE LETTER	REVISION DESCRIPTION	DWN. BY:	CHK'D. BY:	APPV'D. BY:	APPV'D. BY:	DATE

ENGINEER OF RECORD: DANIEL J. RAU (H)

ENGINEERING DISCIPLINE: CIVIL ENGINEER

REGISTRATION NUMBER: STATE OF FLORIDA #0063636

DWN. BY:	CHK. BY:	APPV'D. BY:	APPV'D. BY:
DDM	JSB	DVC	
DATE: 4/2/98	DATE: 4/6/98	DATE: 4/13/98	DATE:

MAT'L. .208 THK. ALUMINUM
6063-T52

RUSKIN Mfg. Grandview, MO
PROPRIETARY INFORMATION

PLOT SCALE: NONE

DWG. CERTIFIED
BY:
DATE:

TITLE: ALUM. FRAME CORNER CLIP

DWG. NO. 60-021563-12B

TOLERANCES:
UNLESS OTHERWISE SPECIFIED
DIMENSIONS:
WITH 2 DECIMAL PLACES. ±.020
WITH 3 DECIMAL PLACES, ±.010
FRACTION DIMENSIONS AS MARKED.

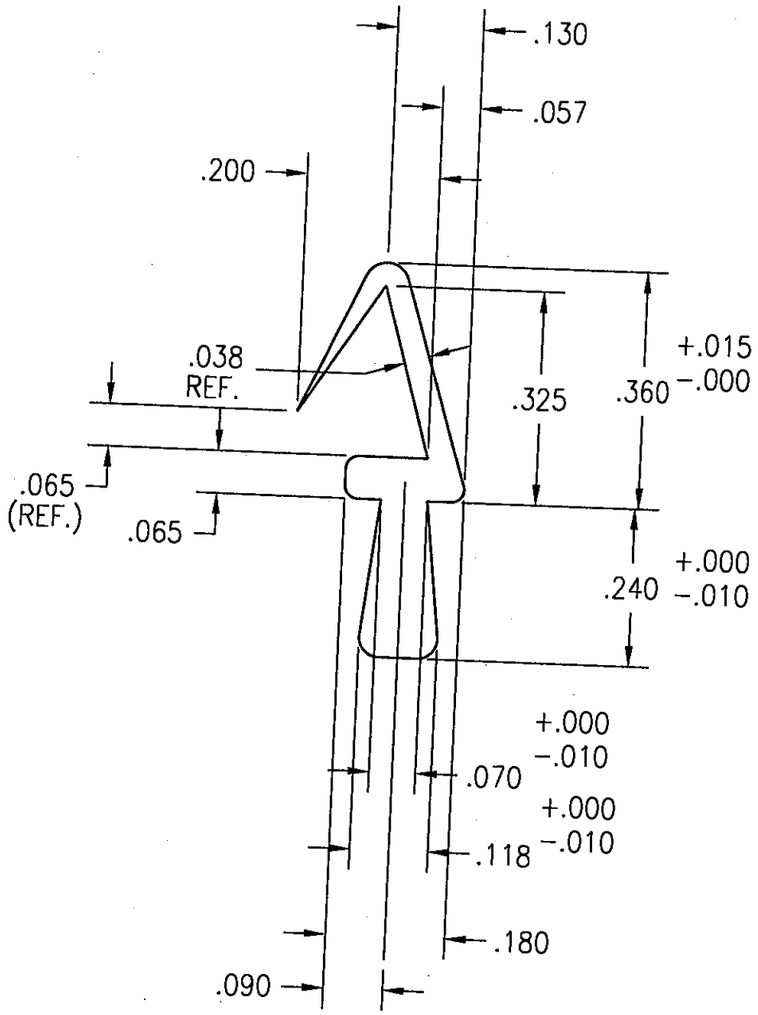

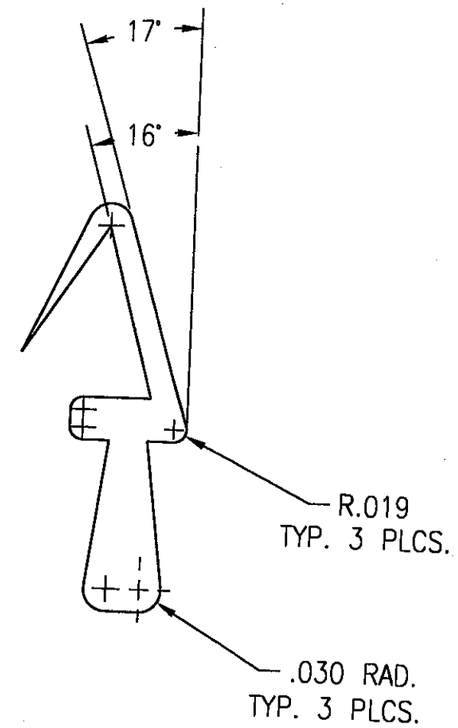

4 x SIZE

ACTUAL SIZE

DANIEL J. RAU
LICENSE
NO. 63636
STATE OF
FLORIDA
PROFESSIONAL ENGINEER
10/28/2010

FOR OFFICE USE ONLY

PRODUCT REVISED
as complying with the Florida
Building Code
Acceptance No 10-1104.05
Expiration Date 01/28/2012
By
Miami Dade Product Control

SHEET 14 OF 38

NOTE: 1. BLADE SEAL IS TO BE USED ON: CD-40, 403, 50 AND 504 DAMPERS.

TOLERANCES:
UNLESS OTHERWISE SPECIFIED
DIMENSIONS:
WITH 2 DECIMAL PLACES, ±.020
WITH 3 DECIMAL PLACES, ±.010
FRACTION DIMENSIONS AS MARKED.

ENGINEER OF RECORD			
DANIEL J. RAU (H)			
ENGINEERING DISCIPLINE			
CIVIL ENGINEER			
REGISTRATION NUMBER			
STATE OF FLORIDA #0063636			
DWN. BY: DDM	CHK. BY: JSB	APPV'D. BY: DVC	APPV'D. BY:
DATE: 4/2/98	DATE: 4/6/98	DATE: 4/13/98	DATE:

MATERIAL: SANTOPRENE (65 DURO)
REED MATERIAL XSA65-591

CHANGE LETTER	REVISION DESCRIPTION	DWN. BY:	CHK'D. BY:	APPV'D. BY:	APPV'D. BY:	DATE
(H)	ENGINEER OF RECORD AND SHEET NUMBER	VMA				
(G)	ADDED SHEET NUMBER	DLC	DJR	DJR		5/23/7
(A)	REMOVED ENGINEERING DATA	JAL				

RUSKIN Mfg. Grandview, MO
PROPRIETARY INFORMATION

PLOT SCALE: NONE

DWG. CERTIFIED
BY:
DATE:

TITLE: CONTROL DAMPER BLADE SEAL

DWG. NO. 60-021563-13B

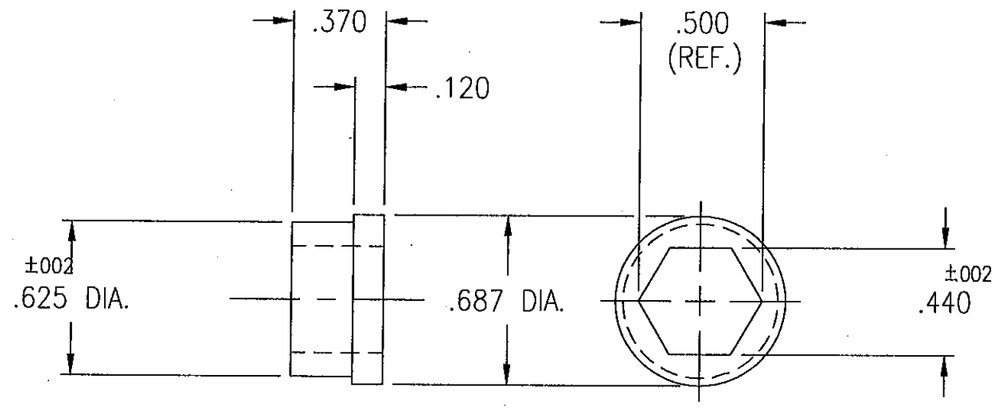

DANIEL J. RAU
LICENSE
NO. 63636
STATE OF
FLORIDA
PROFESSIONAL ENGINEER
10/28/2010

FOR OFFICE USE ONLY

PRODUCT REVISED
as complying with the Florida
Building Code
Acceptance No 10-1104.05
Expiration Date 01/28/2012
By
Miami Dade Product Control

SHEET 15 OF 38

H	ENGINEER OF RECORD AND SHEET NUMBER	VMA				
G	ADDED SHEET NUMBER	DLC	DJR	DJR		5/23/7
A	REMOVED ENGINEERING DATA	JAL				
CHANGE LETTER	REVISION DESCRIPTION	DWN. BY:	CHK'D. BY:	APPV'D. BY:	APPV'D. BY:	DATE

ENGINEER OF RECORD
DANIEL J. RAU (H)

ENGINEERING DISCIPLINE
CIVIL ENGINEER

REGISTRATION NUMBER
STATE OF FLORIDA #0063636

DWN. BY:	CHK. BY:	APPV'D BY:	APPV'D. BY:
DDM	JSB	DVC	
DATE: 4/2/98	DATE: 4/6/98	DATE: 4/13/98	DATE:

MAT'L. LEXAN GE141

RUSKIN Mfg. *Grandview, MO*
PROPRIETARY INFORMATION

PLOT SCALE
NONE

DWG. CERTIFIED
BY:
DATE:

TITLE
BEARING, AXLE
.370 LG W/.120 FLANGE

DWG. NO.
60-021563-14B

TOLERANCES:
UNLESS OTHERWISE SPECIFIED
DIMENSIONS:
WITH 2 DECIMAL PLACES. ±.020
WITH 3 DECIMAL PLACES, ±.010
FRACTION DIMENSIONS AS MARKED.

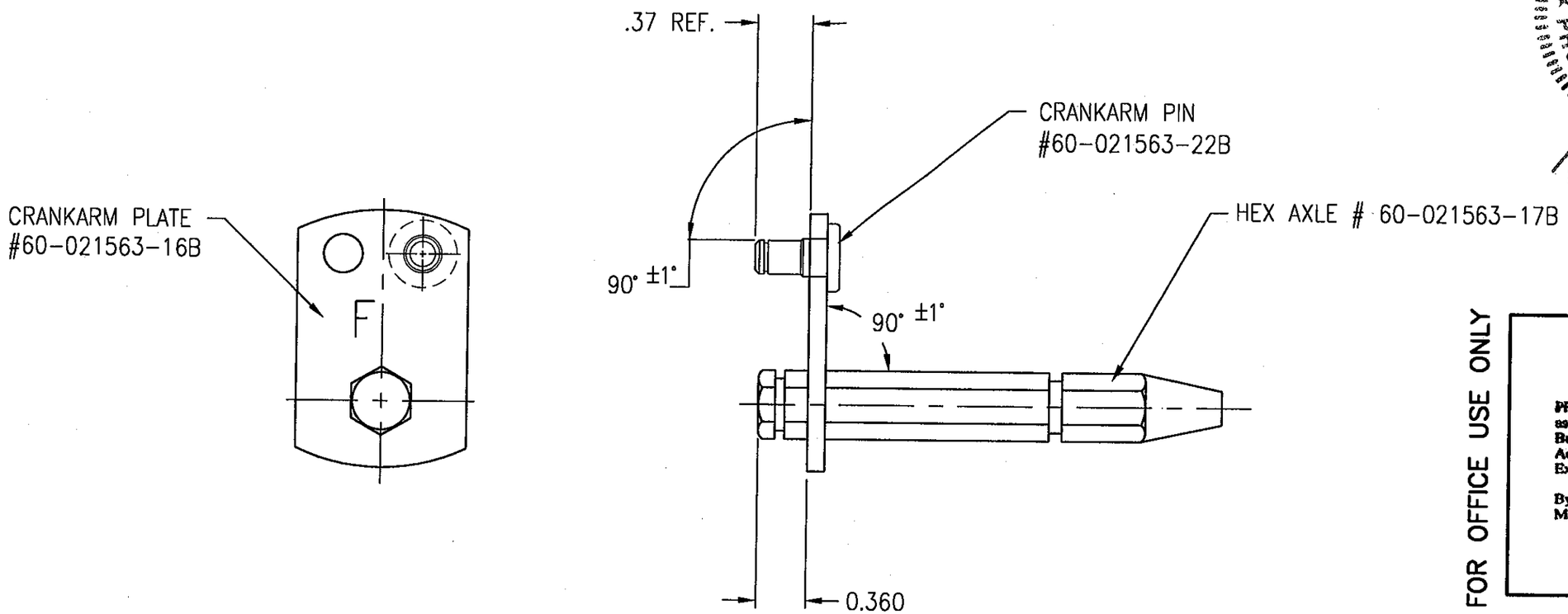

DANIEL J. RAU
LICENSE
NO. 63636
STATE OF
FLORIDA
PROFESSIONAL ENGINEER
10/28/2010

FOR OFFICE USE ONLY

PRODUCT REVISED
as complying with the Florida
Building Code
Acceptance No 10-1104.05
Expiration Date 01/28/2012
By
Miami Dade Product Control

SHEET 16 OF 38

NOTE:

1. "F" INDICATES PIN IS IN RIGHT HAND HOLE.

TOLERANCES:
UNLESS OTHERWISE SPECIFIED
DIMENSIONS:
WITH 2 DECIMAL PLACES. ±.020
WITH 3 DECIMAL PLACES, ±.010
FRACTION DIMENSIONS AS MARKED.

ENGINEER OF RECORD
DANIEL J. RAU (H)

ENGINEERING DISCIPLINE
CIVIL ENGINEER

REGISTRATION NUMBER
STATE OF FLORIDA #0063636

DWN. BY:	CHK. BY:	APPV'D BY:	APPV'D. BY:
DDM	JSB	DVC	
DATE: 4/2/98	DATE: 4/6/98	DATE: 4/13/98	DATE:

· PLTD. STL.

CHANGE LETTER	REVISION DESCRIPTION	DWN. BY:	CHK'D. BY:	APPV'D. BY:	APPV'D. BY:	DATE
(H)	ENGINEER OF RECORD AND SHEET NUMBER	VMA				
(G)	ADDED SHEET NUMBER	DLC	DJR	DJR		5/23/7
(A)	REMOVED ENGINEERING DATA	JAL				

RUSKIN Mfg. Grandview, MO
PROPRIETARY INFORMATION

PLOT SCALE
NONE

DWG. CERTIFIED
BY:
DATE:

TITLE
"F" SIDE LINKAGE
CRANK-ARM ASSY

DWG. NO.
60-021563-15B

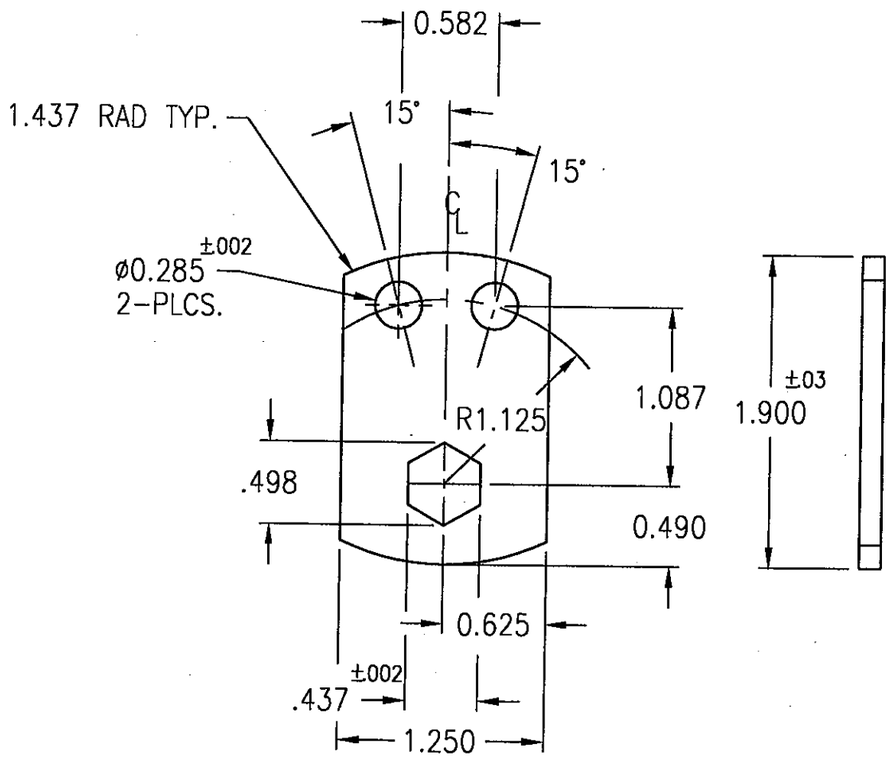

NOTE: HEX ROTATION ALIGNMENT
± 1/2° WITH PLATE EDGE.

DANIEL J. RAU
LICENSE
NO. 63636
STATE OF
FLORIDA
PROFESSIONAL ENGINEER
10/29/2012

FOR OFFICE USE ONLY

PRODUCT REVISED
as complying with the Florida
Building Code
Acceptance No 12-1109.05
Expiration Date 01/28/2012
By
Miami Dade Product Control

SHEET 17 OF 38

TOLERANCES:
UNLESS OTHERWISE SPECIFIED
DIMENSIONS:
WITH 2 DECIMAL PLACES, ±.020
WITH 3 DECIMAL PLACES, ±.010
FRACTION DIMENSIONS AS MARKED.

ENGINEER OF RECORD DANIEL J. RAU (H)						
ENGINEERING DISCIPLINE CIVIL ENGINEER						
REGISTRATION NUMBER STATE OF FLORIDA #0063636						
DWN. BY: DDM	CHK. BY: JSB	APPV'D BY: DVC	APPV'D. BY:			
DATE: 4/2/98	DATE: 4/6/98	DATE: 4/13/98	DATE:			

CHANGE LETTER	REVISION DESCRIPTION	DWN. BY:	CHK'D. BY:	APPV'D. BY:	APPV'D. BY:	DATE
(H)	ENGINEER OF RECORD AND SHEET NUMBER	VMA				
(G)	ADDED SHEET NUMBER	DLC	DJR	DJR		5/23/7
(A)	REMOVED ENGINEERING DATA	JAL				

RUSKIN Mfg. Grandview, MO
PROPRIETARY INFORMATION

PLOT SCALE: NONE

DWG. CERTIFIED
BY:
DATE:

10 GA. GALV.

TITLE
CONCEALED
LINKAGE
PLATE

DWG. NO.
60-021563-16B

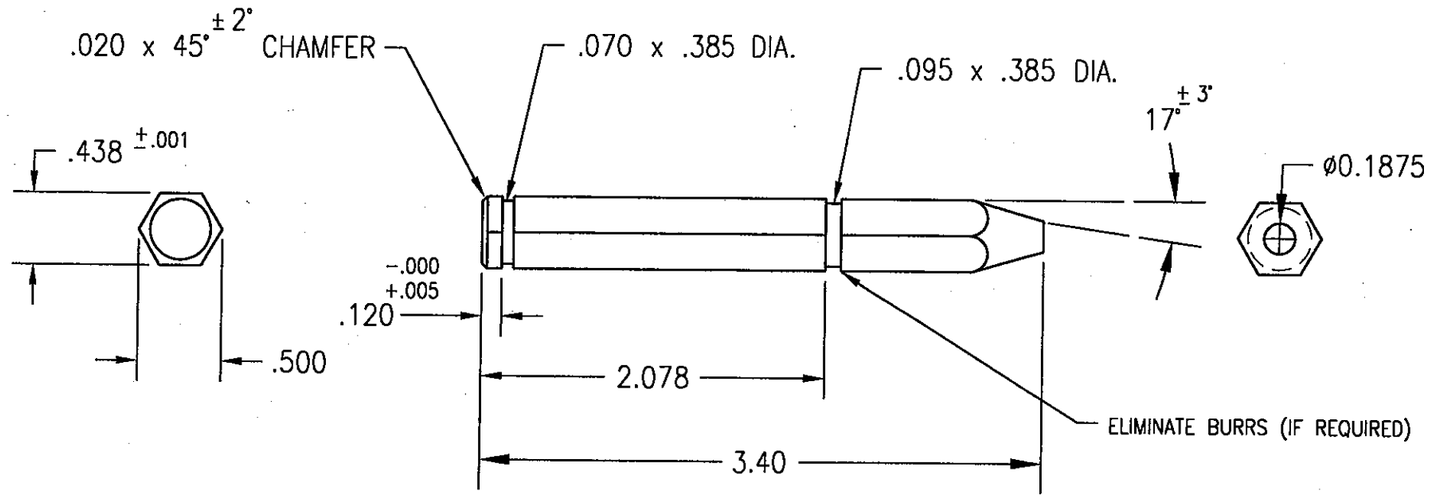

DANIEL J. RAU
LICENSE NO. 63636
STATE OF FLORIDA
PROFESSIONAL ENGINEER
10/28/2010

FOR OFFICE USE ONLY

PRODUCT REVISED
as complying with the Florida Building Code
Acceptance No 10-1104.05
Expiration Date 01/28/2012
By
Miami Dade Product Control

SHEET 18 OF 38

TOLERANCES:
UNLESS OTHERWISE SPECIFIED
DIMENSIONS:
WITH 2 DECIMAL PLACES. ±.020
WITH 3 DECIMAL PLACES. ±.010
FRACTION DIMENSIONS AS MARKED.

H	ENGINEER OF RECORD AND SHEET NUMBER	VMA				
G	ADDED SHEET NUMBER	DLC	DJR	DJR		5/23/7
A	REMOVED ENGINEERING DATA	JAL				
CHANGE LETTER	REVISION DESCRIPTION	DWN. BY:	CHK'D. BY:	APPV'D. BY:	APPV'D. BY:	DATE

ENGINEER OF RECORD: DANIEL J. RAU (H)
ENGINEERING DISCIPLINE: CIVIL ENGINEER
REGISTRATION NUMBER: STATE OF FLORIDA #0063636

DWN. BY:	CHK. BY:	APPV'D. BY:	APPV'D. BY:
DDM	JSB	DVC	
DATE: 4/2/98	DATE: 4/6/98	DATE: 4/13/98	DATE:

7/16" HEX STL. ZINC PLTD

RUSKIN Mfg. Grandview, MO
PROPRIETARY INFORMATION

PLOT SCALE: NONE

DWG. CERTIFIED
BY:
DATE:

TITLE: 7/6" HEX AXLE

DWG. NO. 60-021563-17B

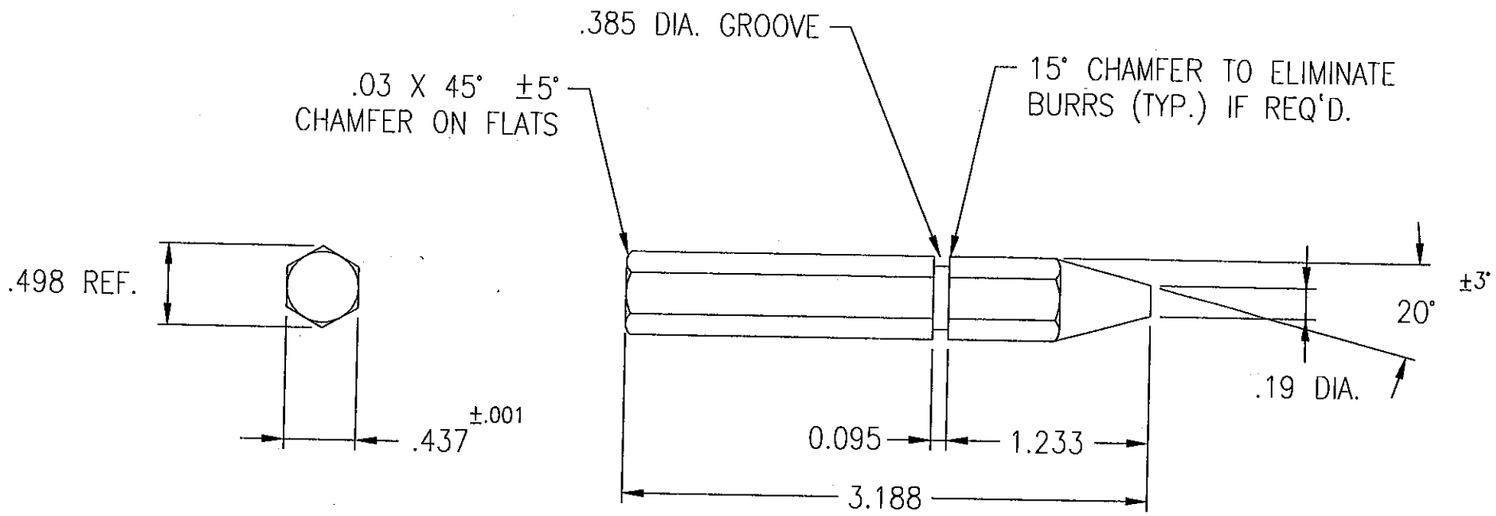

DANIEL J. RAU
LICENSE
NO. 63636
STATE OF
FLORIDA
PROFESSIONAL ENGINEER
10/28/2010

FOR OFFICE USE ONLY

PRODUCT REVISED
as complying with the Florida
Building Code
Acceptance No 10-1104.05
Expiration Date 01/28/2012
By
Miami Dade Product Control

SHEET 19 OF 38

TOLERANCES:
UNLESS OTHERWISE SPECIFIED
DIMENSIONS:
WITH 2 DECIMAL PLACES. ±.020
WITH 3 DECIMAL PLACES, ±.010
FRACTION DIMENSIONS AS MARKED.

H	ENGINEER OF RECORD AND SHEET NUMBER	VMA				
G	ADDED SHEET NUMBER	DLC	DJR	DJR		5/23/7
A	REMOVED ENGINEERING DATA	JAL				
CHANGE LETTER	REVISION DESCRIPTION	DWN. BY:	CHK'D. BY:	APPV'D. BY:	APPV'D. BY:	DATE

ENGINEER OF RECORD: DANIEL J. RAU (H)

ENGINEERING DISCIPLINE: CIVIL ENGINEER

REGISTRATION NUMBER: STATE OF FLORIDA #0063636

DWN. BY:	CHK. BY:	APPV'D. BY:	APPV'D. BY:
DDM	JBS	DVC	
DATE: 4/2/98	DATE: 4/6/98	DATE: 4/13/98	DATE:

RUSKIN Mfg. Grandview, MO
PROPRIETARY INFORMATION

PLOT SCALE: NONE

DWG. CERTIFIED
BY:
DATE:

7/16" HEX STL. ZINC PLTD

TITLE: 7/16" HEX IDLER AXLE

DWG. NO. 60-021563-18B

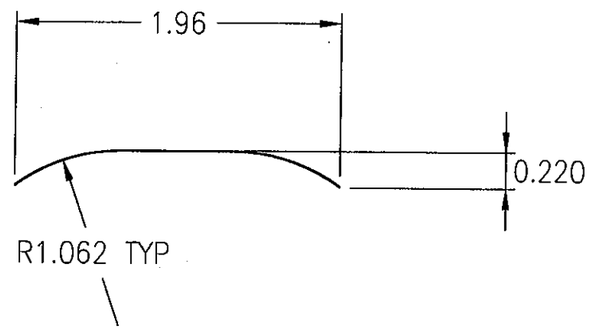

DANIEL J. RAU
LICENSE
NO. 63636
STATE OF
FLORIDA
PROFESSIONAL ENGINEER
10/28/2010

FOR OFFICE USE ONLY

PRODUCT REVISED
as complying with the Florida
Building Code
Acceptance No 10-1109.05
Expiration Date 11/28/2012
By
Miami Dade Product Control

SHEET 20 OF 38

H	ENGINEER OF RECORD AND SHEET NUMBER	VMA				
G	ADDED SHEET NUMBER	DLC	DJR	DJR		5/23/7
A	REMOVED ENGINEERINR DATA	JAL				
CHANGE LETTER	REVISION DESCRIPTION	DWN. BY:	CHK'D. BY:	APPV'D. BY:	APPV'D. BY:	DATE

ENGINEER OF RECORD
DANIEL J. RAU (H)

ENGINEERING DISCIPLINE
CIVIL ENGINEER

REGISTRATION NUMBER
STATE OF FLORIDA #0063636

DWN. BY: DDM	CHK. BY: JSB	APPV'D. BY: DVC	APPV'D. BY:
DATE: 4/2/97	DATE: 4/6/98	DATE: 4/13/98	DATE:

MAT'L. .007" THK. TYPE
301 STN. STL. SPRING

TOLERANCES:
UNLESS OTHERWISE SPECIFIED
DIMENSIONS:
WITH 2 DECIMAL PLACES. ±.020
WITH 3 DECIMAL PLACES, ±.010
FRACTION DIMENSIONS AS MARKED.

RUSKIN Mfg. Grandview, MO
PROPRIETARY INFORMATION

TITLE
JAMB SEAL

PLOT SCALE
NONE

DWG. CERTIFIED
BY:
DATE:

DWG. NO.
60-021563-19B

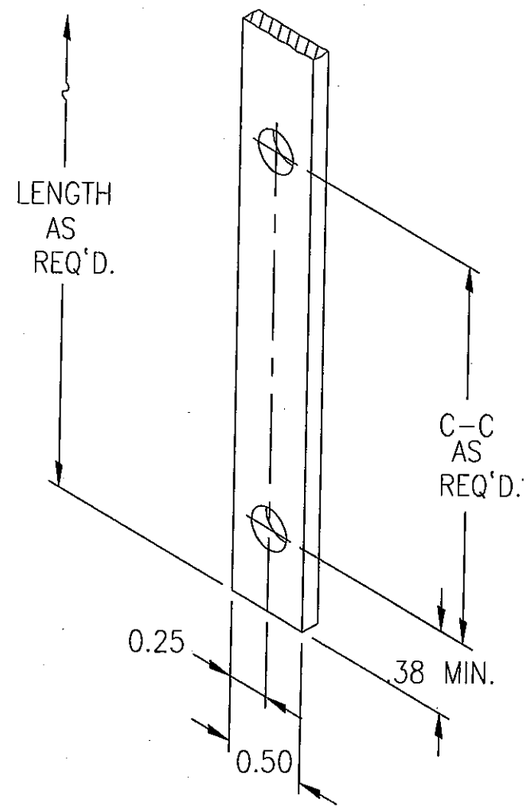

DANIEL J. RAU
LICENSE
NO. 63636
STATE OF
FLORIDA
PROFESSIONAL ENGINEER
10/18/2012

FOR OFFICE USE ONLY

PRODUCT REVISED
as complying with the Florida
Building Code
Acceptance No 10-1104.05
Expiration Date 01/28/2012
By
Miami Dade Product Control

SHEET 21 OF 38

TOLERANCES:
UNLESS OTHERWISE SPECIFIED
DIMENSIONS:
WITH 2 DECIMAL PLACES. ±.020
WITH 3 DECIMAL PLACES, ±.010
FRACTION DIMENSIONS AS MARKED.

H	ENGINEER OF RECORD AND SHEET NUMBER	VMA				
G	ADDED SHEET NUMBER	DLC	DJR	DJR		5/23/7
A	REMOVED ENGINEERING DATA	JAL				
CHANGE LETTER	REVISION DESCRIPTION	DWN. BY:	CHK'D. BY:	APPV'D. BY:	APPV'D. BY:	DATE

ENGINEER OF RECORD
DANIEL J. RAU (H)

ENGINEERING DISCIPLINE
CIVIL ENGINEER

REGISTRATION NUMBER
STATE OF FLORIDA #0063636

DWN. BY:	CHK. BY:	APPV'D. BY:	APPV'D. BY:
DDM	JSB	DVC	
DATE: 4/2/98	DATE: 4/6/98	DATE: 4/13/98	DATE:

MATL:12 GA GALV.

RUSKIN Mfg. Grandview, MO
PROPRIETARY INFORMATION

TITLE
LINKAGE TIEBAR

PLOT SCALE
NONE

DWG. CERTIFIED
BY:
DATE:

DWG. NO.
60-021563-20B

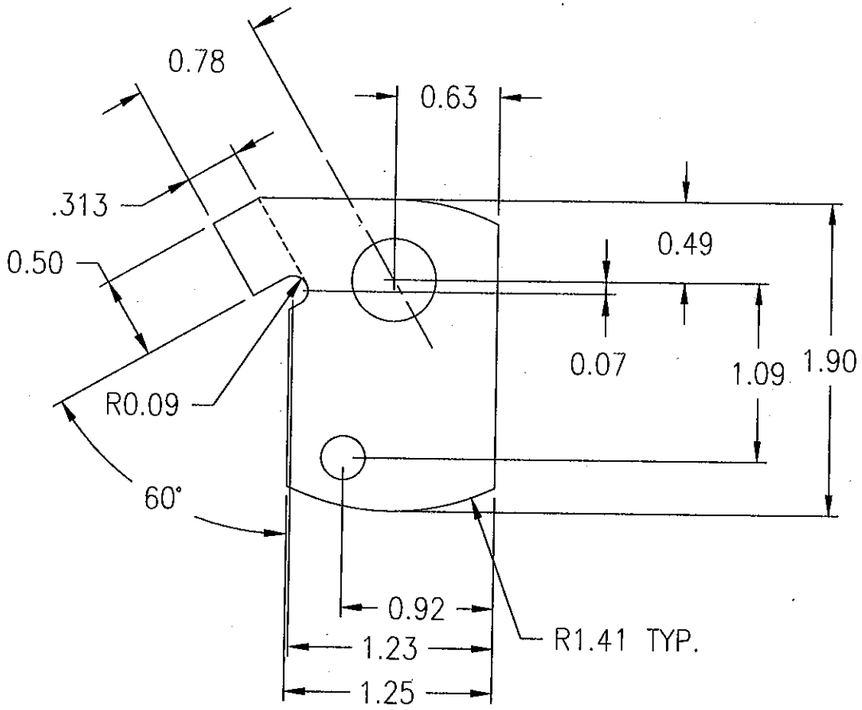

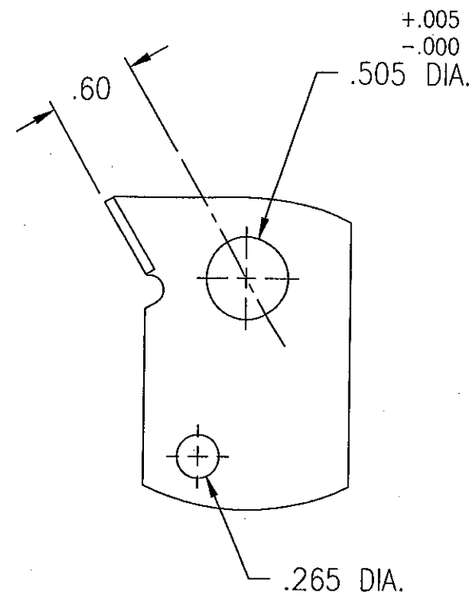

FORMED PART

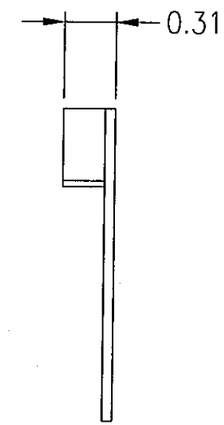

DANIEL J. RAU
LICENSE
NO. 63636
STATE OF
FLORIDA
PROFESSIONAL ENGINEER
10/28/2010

FOR OFFICE USE ONLY

PRODUCT REVISED
as complying with the Florida
Building Code
Acceptance No 10-1104.05
Expiration Date 01/28/2012
By
Miami-Dade Product Control

SHEET 22 OF 38

TOLERANCES:
UNLESS OTHERWISE SPECIFIED
DIMENSIONS:
WITH 2 DECIMAL PLACES. ±.020
WITH 3 DECIMAL PLACES, ±.010
FRACTION DIMENSIONS AS MARKED.

ENGINEER OF RECORD: DANIEL J. RAU (H)						
ENGINEERING DISCIPLINE: CIVIL ENGINEER						
REGISTRATION NUMBER: STATE OF FLORIDA #0063636						
DWN. BY: DDM	CHK. BY: JSB	APPV'D. BY: DVC	APPV'D. BY:			
DATE: 4/2/98	DATE: 4/6/98	DATE: 4/13/98	DATE:			
MAT'L. 16 GA. GALV.						

CHANGE LETTER	REVISION DESCRIPTION	DWN. BY:	CHK'D. BY:	APPV'D. BY:	APPV'D. BY:	DATE
(H)	ENGINEER OF RECORD AND SHEET NUMBER	VMA				
(G)	ADDED SHEET NUMBER	DLC	DJR	DJR		5/23/7
(A)	REMOVED ENGINEERING DATA	JAL				

RUSKIN Mfg. Grandview, MO
PROPRIETARY INFORMATION

PLOT SCALE: NONE

DWG. CERTIFIED
BY:
DATE:

TITLE: CONCEALED LINKAGE OVER-TRAVEL STOP

DWG. NO. 60-021563-21B

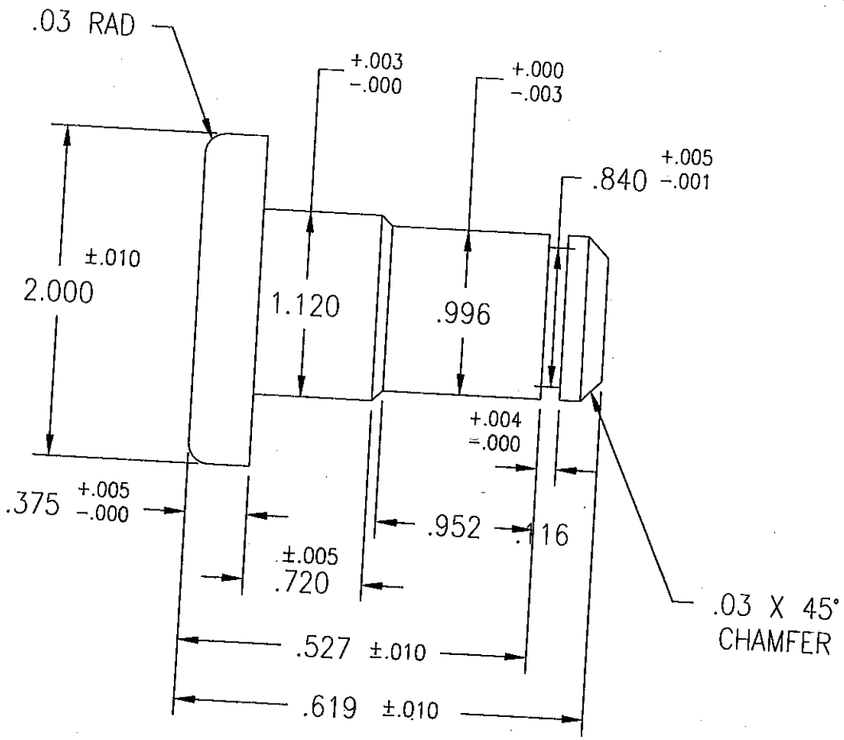

PIN FOR 10 GA. THK
LINKAGE ARM

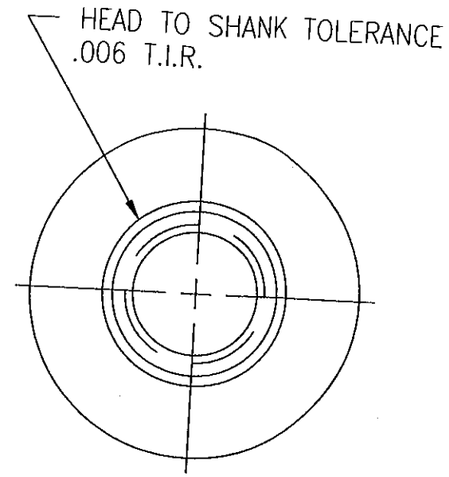

TYPICAL
END VIEW

DANIEL J. RAU
LICENSE
NO. 63636
STATE OF
FLORIDA
PROFESSIONAL ENGINEER
10/28/2010

FOR OFFICE USE ONLY

PRODUCT REVISED
as complying with the Florida
Building Code
Acceptance No 10-1109.05
Expiration Date 01/28/2012
By
Miami-Dade Product Control

SHEET 23 OF 38

TOLERANCES:
UNLESS OTHERWISE SPECIFIED
DIMENSIONS:
WITH 2 DECIMAL PLACES, ±.020
WITH 3 DECIMAL PLACES, ±.010
FRACTION DIMENSIONS AS MARKED.

ENGINEER OF RECORD DANIEL J. RAU (H)				
ENGINEERING DISCIPLINE CIVIL ENGINEER				
REGISTRATION NUMBER STATE OF FLORIDA #0063636				
DWN. BY: DDM	CHK. BY: JSB	APPV'D. BY: DVC	APPV'D. BY:	
DATE: 4/2/98	DATE: 4/6/98	DATE: 4/13/98	DATE:	
MATERIAL: 305 SS				

CHANGE LETTER	REVISION DESCRIPTION	DWN. BY:	CHK'D. BY:	APPV'D. BY:	APPV'D. BY:	DATE
(H)	ENGINEER OF RECORD AND SHEET NUMBER	VMA				
(G)	ADDED SHEET NUMBER	DLC	DJR	DJR		5/23/7
(A)	REMOVED ENGINEERING DATA	JAL				

RUSKIN Mfg. Grandview, MO
PROPRIETARY INFORMATION

TITLE
CRANK PIN

PLOT SCALE
NONE

DWG. CERTIFIED
BY:
DATE:

DWG. NO.
60-021563-22B

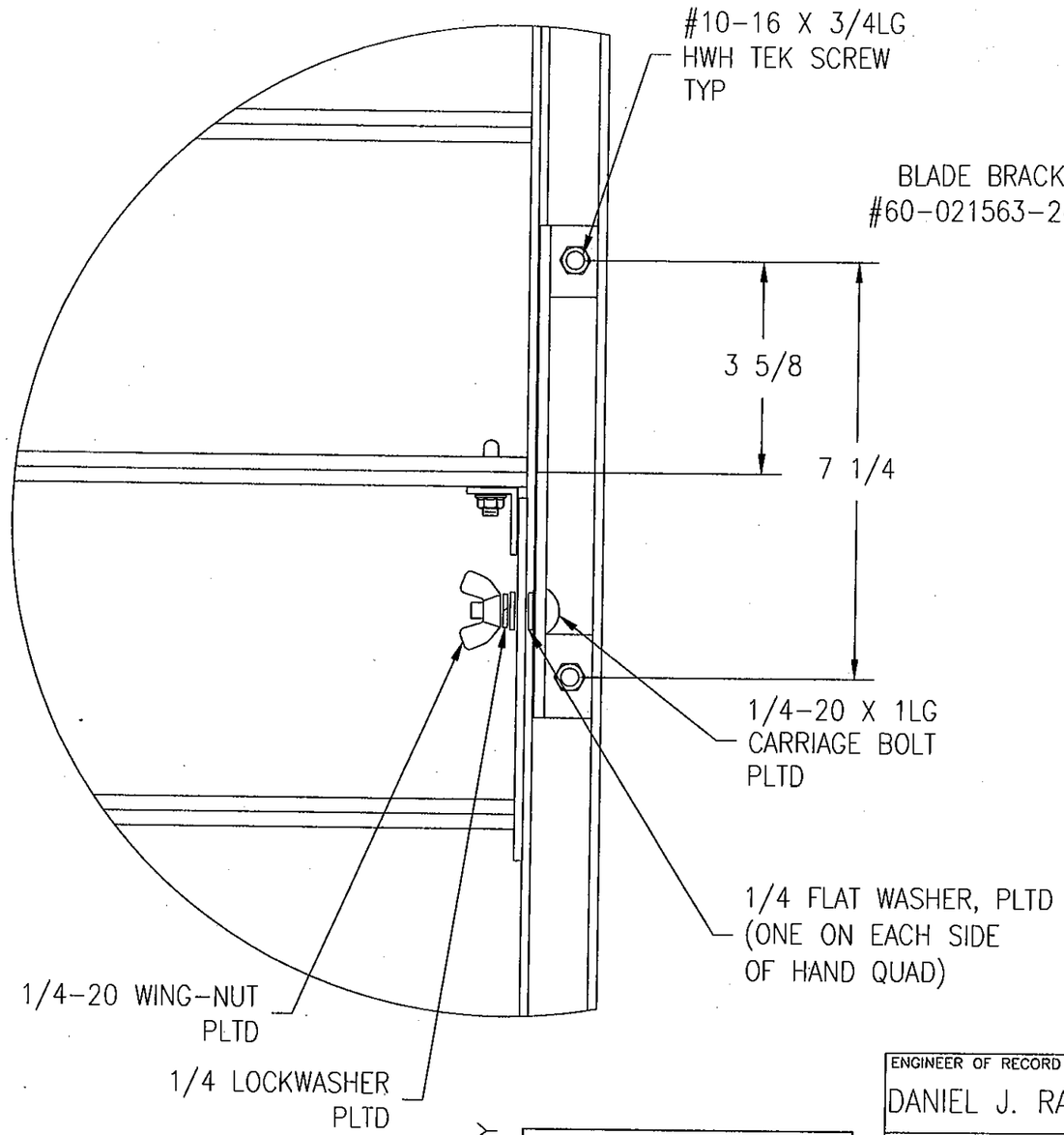

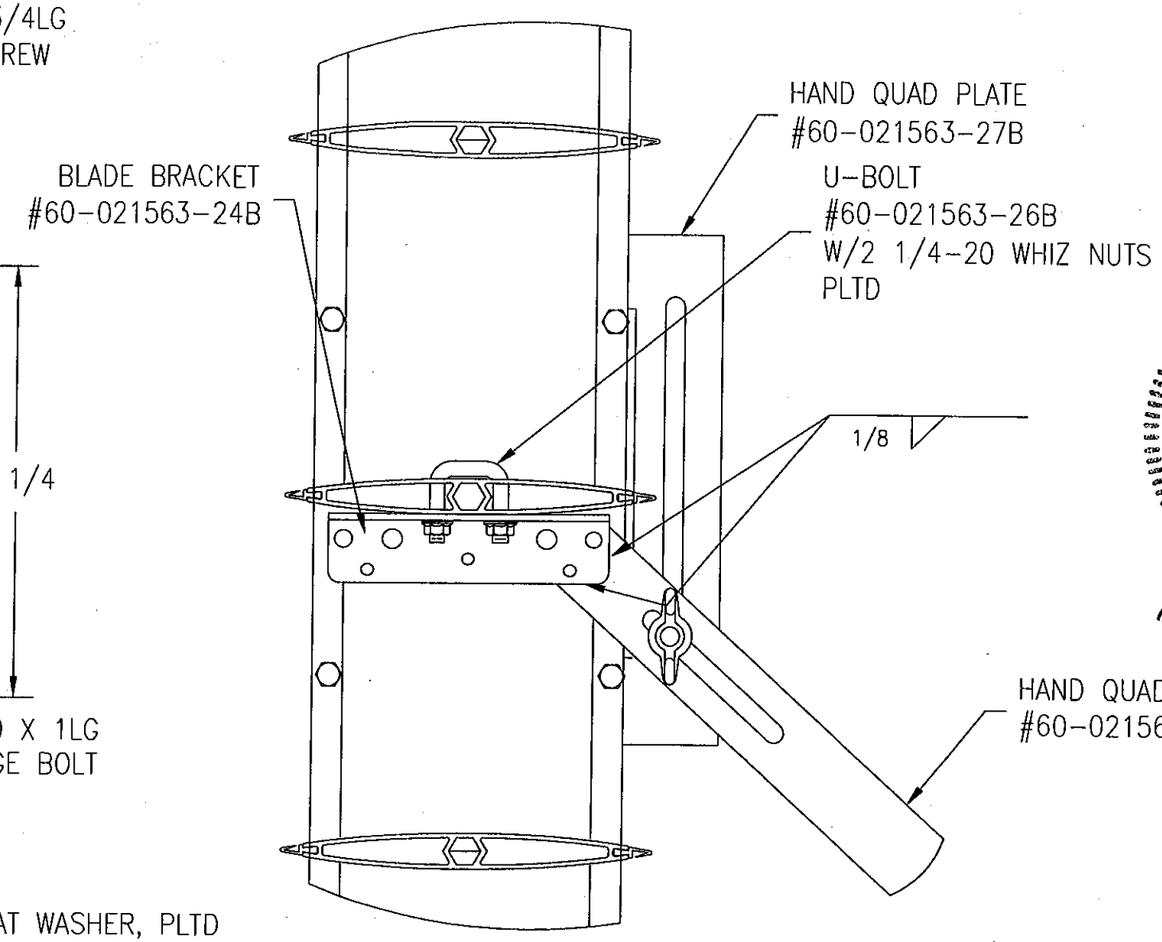

DANIEL J. RAU
LICENSE
NO. 63636
STATE OF
FLORIDA
PROFESSIONAL ENGINEER
10/28/2010

SHEET 24 OF 38

FOR OFFICE USE ONLY

PRODUCT REVISED
as complying with the Florida
Building Code
Acceptance No 10-1104.05
Expiration Date 01/28/2012
By
Miami Dade Product Control

H	ENGINEER OF RECORD AND SHEET NUMBER	VMA				
G	ADDED SHEET NUMBER	DLC	DJR	DJR		5/23/7
A	REMOVED ENGINEERS DATA	JAL	VMA			4-17-98
CHANGE LETTER	REVISION DESCRIPTION	DWN. BY:	CHK'D. BY:	APPV'D. BY:	APPV'D. BY:	DATE

ENGINEER OF RECORD
DANIEL J. RAU (H)

ENGINEERING DISCIPLINE
CIVIL ENGINEER

REGISTRATION NUMBER
STATE OF FLORIDA #0063636

DWN. BY:	CHK. BY:	APPV'D. BY:	APPV'D. BY:
DDM	JSB	DVC	
DATE: 4/2/98	DATE: 4/6/98	DATE: 4/13/98	DATE:

RUSKIN Mfg. Grandview, MO
PROPRIETARY INFORMATION

PLOT SCALE
NONE

DWG. CERTIFIED
BY:
DATE:

TITLE
HAND QUAD
CD-50 DAMPER

DWG. NO.
60-021563-23B

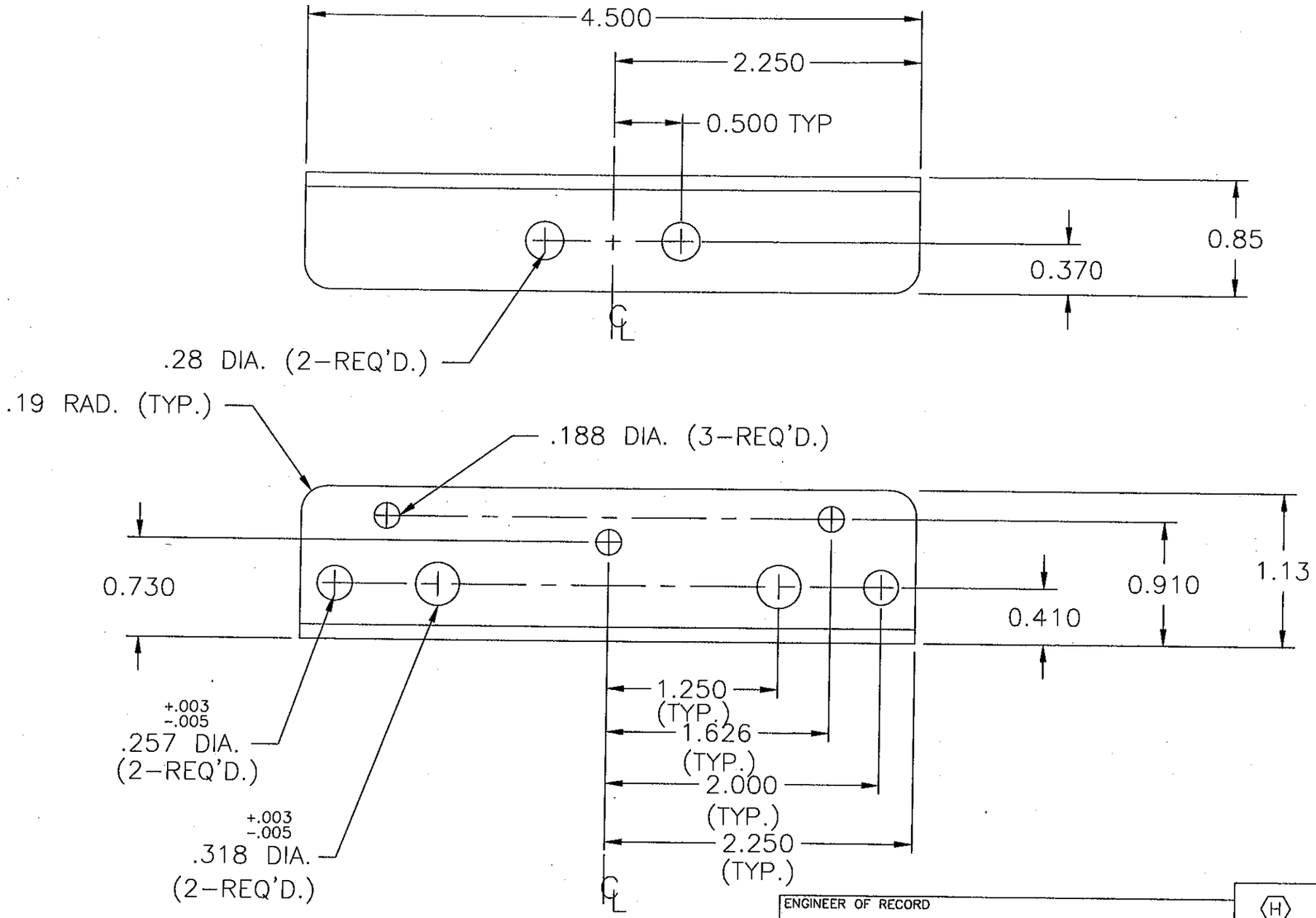

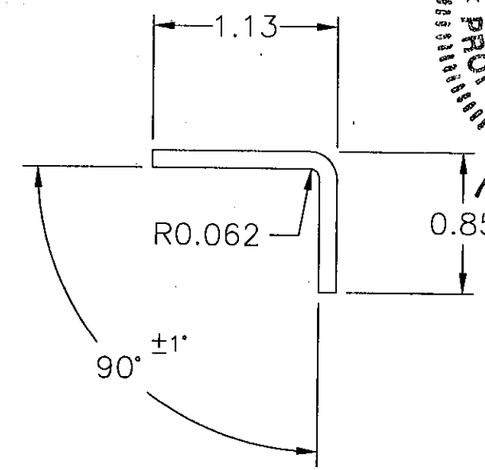

DANIEL J. RAU
LICENSE NO. 63636
STATE OF FLORIDA
PROFESSIONAL ENGINEER
10/28/2010

FOR OFFICE USE ONLY

PRODUCT REVISED
as complying with the Florida Building Code
Acceptance No 10-1109.05
Expiration Date 01/28/2012
By
Miami Dade Product Control

SHEET 25 OF 38

TOLERANCES:
UNLESS OTHERWISE SPECIFIED
DIMENSIONS:
WITH 2 DECIMAL PLACES. ±.020
WITH 3 DECIMAL PLACES, ±.010
FRACTION DIMENSIONS AS MARKED.

ENGINEER OF RECORD
DANIEL J. RAU (H)

ENGINEERING DISCIPLINE
CIVIL ENGINEER

REGISTRATION NUMBER
STATE OF FLORIDA #0063636

DWN. BY:	CHK. BY:	APPV'D. BY:	APPV'D. BY:
DDM	JSB	DVC	
DATE: 4/2/98	DATE: 4/6/98	DATE: 4/13/98	DATE:

MATL: 12 GA. GALV.

CHANGE LETTER	REVISION DESCRIPTION	DWN. BY:	CHK'D. BY:	APPV'D. BY:	APPV'D. BY:	DATE
(H)	ENGINEER OF RECORD AND SHEET NUMBER	VMA				
(G)	ADDED SHEET NUMBER	DLC	DJR	DJR		5/23/7
(A)	REMOVED ENGINEERS DATA	JAL				

RUSKIN Mfg. Grandview, MO
PROPRIETARY INFORMATION

PLOT SCALE
NONE

DWG. CERTIFIED
BY:
DATE:

TITLE
AIRFOIL BLADE BRKT

DWG. NO.
60-021563-24B

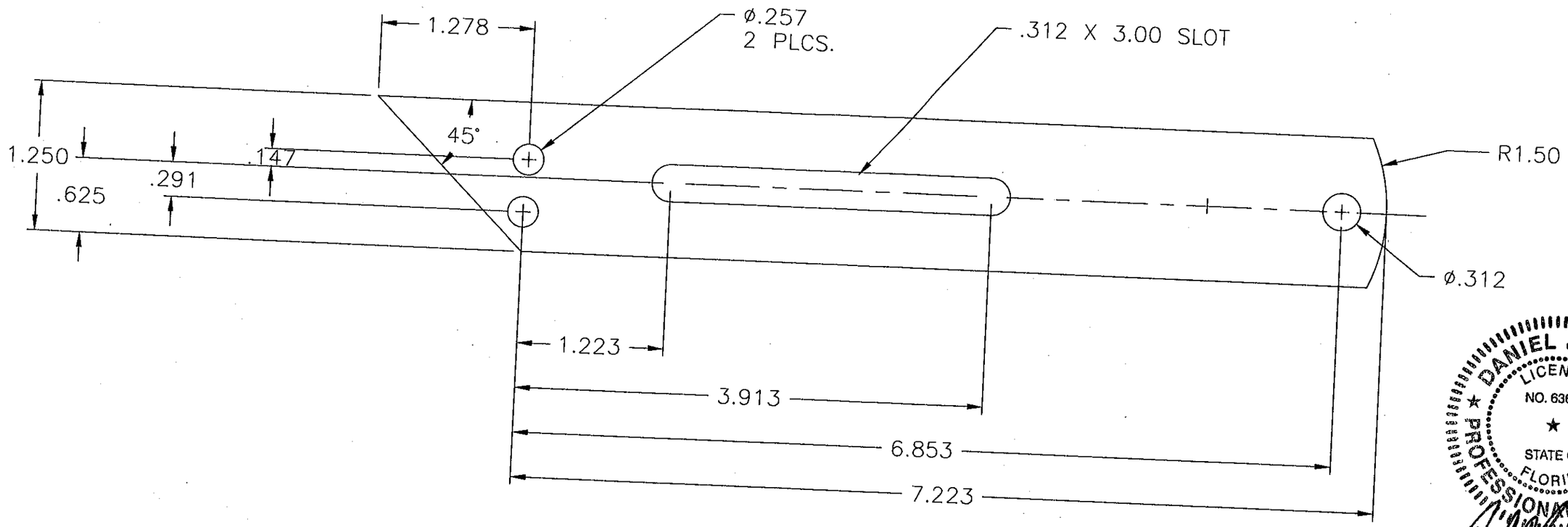

DANIEL J. RAU
LICENSE
NO. 63636
STATE OF
FLORIDA
PROFESSIONAL ENGINEER
10/28/2010

SHEET 26 OF 38

FOR OFFICE USE ONLY

PRODUCT REVISED
as complying with the Florida
Building Code
Acceptance No 10-1104.05
Expiration Date 01/28/2012
By
Miami/Dade Product Control

H	ENGINEER OF RECORD AND SHEET NUMBER	VMA				
G	ADDED SHEET NUMBER	DLC	DJR	DJR		5/23/7
A	REMOVED ENGINEERS DATA	JAL				
CHANGE LETTER	REVISION DESCRIPTION	DWN. BY:	CHK'D. BY:	APPV'D. BY:	APPV'D. BY:	DATE

ENGINEER OF RECORD: DANIEL J. RAU (H)

ENGINEERING DISCIPLINE: CIVIL ENGINEER

REGISTRATION NUMBER: STATE OF FLORIDA #0063636

DWN. BY:	CHK. BY:	APPV'D. BY:	APPV'D. BY:
DDM	JSB	DVC	
DATE: 4/2/98	DATE: 4/6/98	DATE: 4/13/98	DATE:

10 GA GALV STL

RUSKIN Mfg. Grandview, MO

PROPRIETARY INFORMATION

PLOT SCALE: NONE

DWG. CERTIFIED BY: DATE:

TITLE: HAND QUAD ARM

DWG. NO. 60-021563-25B

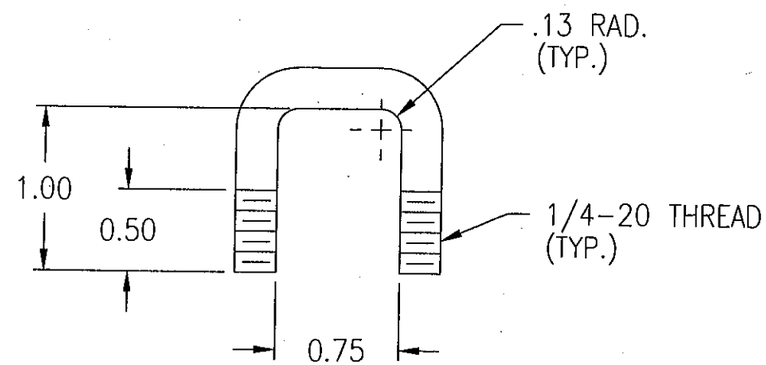

DANIEL J. RAU
LICENSE
NO. 63636
STATE OF
FLORIDA
PROFESSIONAL ENGINEER
10/28/2010

FOR OFFICE USE ONLY

PRODUCT REVISED
as complying with the Florida
Building Code
Acceptance No 10-1104.05
Expiration Date 01/28/2012
By
Miami/Dade Product Control

SHEET 27 OF 38

TOLERANCES:
UNLESS OTHERWISE SPECIFIED
DIMENSIONS:
WITH 2 DECIMAL PLACES. ±.020
WITH 3 DECIMAL PLACES, ±.010
FRACTION DIMENSIONS AS MARKED.

H	ENGINEER OF RECORD AND SHEET NUMBER	VMA				
G	ADDED SHEET NUMBER	DLC	DJR	DJR		5/23/7
A	REMOVED ENGINEERS DATA	JAL				
CHANGE LETTER	REVISION DESCRIPTION	DWN. BY:	CHK'D. BY:	APPV'D. BY:	APPV'D. BY:	DATE

ENGINEER OF RECORD
DANIEL J. RAU (H)

ENGINEERING DISCIPLINE
CIVIL ENGINEER

REGISTRATION NUMBER
STATE OF FLORIDA #0063636

DWN. BY: DDM	CHK. BY: JSB	APPV'D. BY: DVC	APPV'D. BY:
DATE: 4/2/98	DATE: 4/6/98	DATE: 4/13/98	DATE:

1/4" DIA. PLTD. STL.

RUSKIN Mfg. Grandview, MO
PROPRIETARY INFORMATION

PLOT SCALE
NONE

DWG. CERTIFIED
BY:
DATE:

TITLE
U-BOLT

DWG. NO.
60-021563-26B

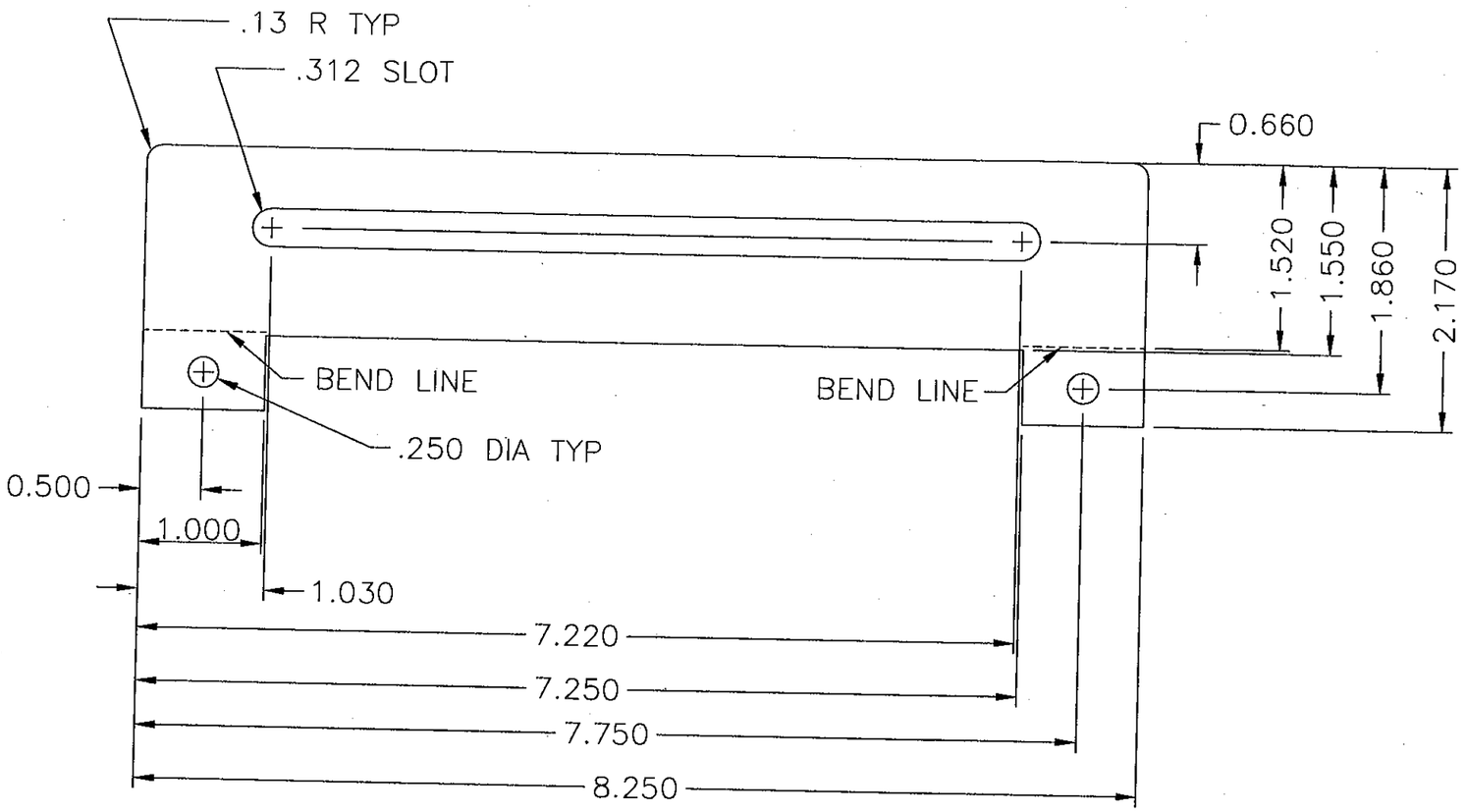

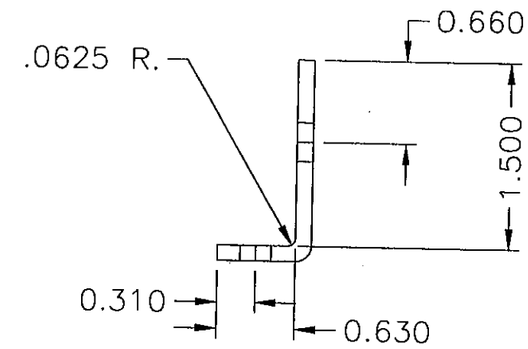

FORMED PART

DANIEL J. RAU
LICENSE
NO. 63636
STATE OF
FLORIDA
PROFESSIONAL ENGINEER
10/28/2010

FOR OFFICE USE ONLY

PRODUCT REVISED
as complying with the Florida
Building Code
Acceptance No 10-1104.05
Expiration Date 01/28/2012
By
Miami Dade Product Control

SHEET 28 OF 38

H	ENGINEER OF RECORD AND SHEET NUMBER	VMA				
G	ADDED SHEET NUMBER	DLC	DJR	DJR		5/23/7
A	REMOVED ENGINEERS DATA	JAL				
CHANGE LETTER	REVISION DESCRIPTION	DWN. BY:	CHK'D. BY:	APPV'D. BY:	APPV'D. BY:	DATE

ENGINEER OF RECORD
DANIEL J. RAU (H)

ENGINEERING DISCIPLINE
CIVIL ENGINEER

REGISTRATION NUMBER
STATE OF FLORIDA #0063636

DWN. BY: DDM	CHK. BY: JSB	APPV'D. BY: DVC	APPV'D. BY:
DATE: 4/2/98	DATE: 4/6/98	DATE: 4/13/98	DATE:

MAT'L 12 GA GALV. STEEL

RUSKIN Mfg. Grandview, MO
PROPRIETARY INFORMATION

TITLE
HAND QUADRANT PLATE

PLOT SCALE
3/4=1

DWG. CERTIFIED
BY:
DATE:

DWG. NO.
60-021563-27B

TOLERANCES:
UNLESS OTHERWISE SPECIFIED
DIMENSIONS:
WITH 2 DECIMAL PLACES, ±.020
WITH 3 DECIMAL PLACES, ±.010
FRACTION DIMENSIONS AS MARKED.

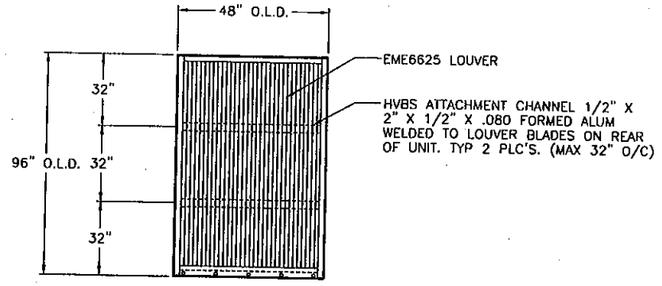

EME6625 LOUVER ASSEMBLY "C"

NTS DESIGN PRESSURE RATING +160/ −140 PSF FRONT VIEW

© SEE SECTION DETAILS -06D FOR APPLICABILITY

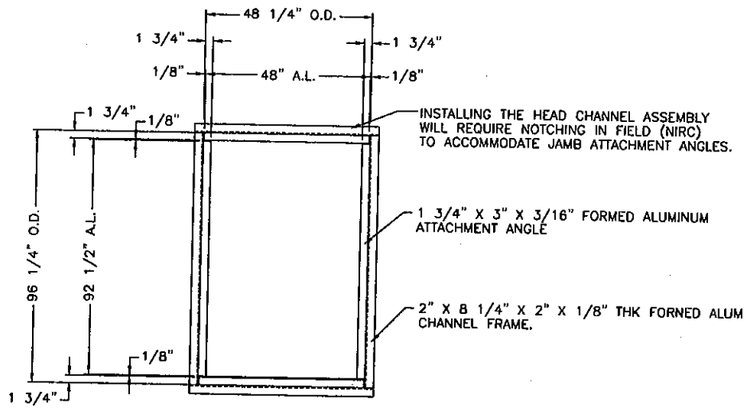

CHANNEL FRAME & ATT ANGLE ELEVATION

REAR VIEW

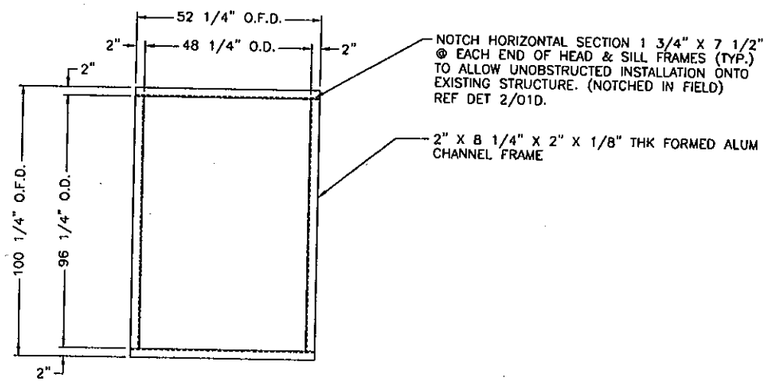

CHANNEL FRAME ELEVATION

FRONT VIEW

(1) REAR & FRONT ELEVATION VIEW OF CHANNEL FRAME & ATT. ANGLE

N.T.S.

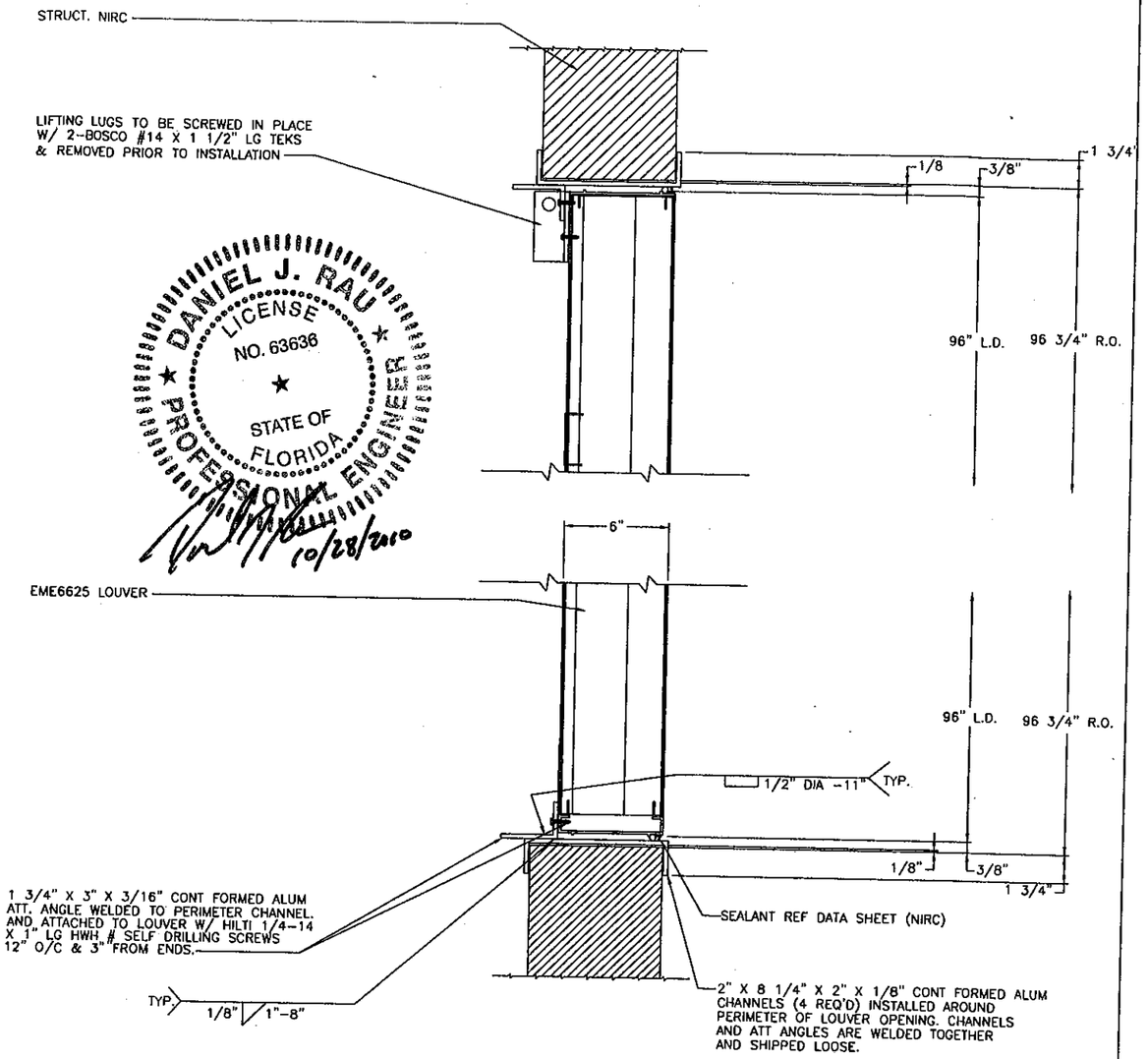

DANIEL J. RAU LICENSE NO. 63636 STATE OF FLORIDA PROFESSIONAL ENGINEER 10/28/2010

EME6625 SECTION (JAMB SIM TO HEAD)

3"=1'-0"

FOR FASTENER LOADS REF DWG. 60-021617-06D.

LEGEND:

O.F.D. = OUTSIDE FRAME DIM.
R.O. = ROUGH OPENING
A.L. = ANGLE LENGTH
O.D. = OPENING DIM.
N.T.S. = NOT TO SCALE
NIRC = NOT IN RUSKIN CONTRACT
HVBS = HIDDEN VERTICAL BLADE SUPPORT.
SSD = SHIP SECTION DIM.
L.D. = LOUVER DIM.
DIM. = DIMENSION
SIM = SIMILAR

NOTES:

- THE STRUCTURAL SUBSTRATE THAT HOLDS THE LOUVER IN PLACE, IS ASSUMED TO BE STRUCTURALLY SOUND AND STABLE TO TAKE THE LOADS DISPERSED BY THE LOUVER.
- LOUVER IS NONBEARING AND IS NOT DESIGNED TO WITHSTAND BUILDING DEADLOADS.

FOR OFFICE USE ONLY

PRODUCT REVISED
as complying with the Florida Building Code
Acceptance No 10-1104.05
Expiration Date 01/28/2012
By
Miami Dade Product Control

SHEET 29 OF 38

ENGINEER OF RECORD: DANIEL J. RAU (H)	(H)	ENGINEER OF RECORD AND SHEET NUMBER	VMA			
ENGINEERING DISCIPLINE: CIVIL ENGINEER	(O)	ADDED SHEET NUMBER	DLC	DJR	DJR	5/23/7
REGISTRATION NUMBER: STATE OF FLORIDA #0063636	CHANGE LETTER	REVISION DESCRIPTION	DWN. BY:	CHK'D. BY:	APPV'D. BY:	APPV'D. BY:	DATE
DWN. BY: GSL DATE: 10-13-98 / CHK. BY: VMA DATE: 10-15-98 / APPV'D. BY: DATE: / APPV'D. BY: DATE:	RUSKIN Mfg 3900 Dr. Greaves Rd Grandview, MO 64030 PROPRIETARY INFORMATION	PLOT SCALE: NONE	DWG. CERTIFIED BY: DATE:			
LOUVER DAMPER ASSY DADE CTY. FLORIDA	TITLE: EME6625D LOUVER ASSEMBLIES & SECTIONS	DWG. NO. 60-021563-28D				

FRAME	
6063-T5 extruded aluminum with .125 nominal wall thickness.	X
Flange frame is same material and thickness as above.	
BLADES	
6063-T5 extruded aluminum with .091 nominal wall thickness. (Blades are mounted vertically)	X
SCREEN	
5/8" x .040" expanded flattened aluminum bird screen.	
1/2" mesh x .063" aluminum bird screen.	X
18-16 mesh al. insect screen.	
No Screen	
FINISH	
Mill.	X
Kynar (opt).	
Baked enamel (modified fluoropolymer, 50% Kynar, opt).	
Color anodize (opt).	
Clear anodize (opt).	
Color: Ref. Note 15	X
INSTALLATION CHANNELS	
Install. channel 1/8" formed alum. Installation angles, 3/16" formed alum.	X
ACCESSORIES (opt)	
Clip angles.	
Blankoff panel.	

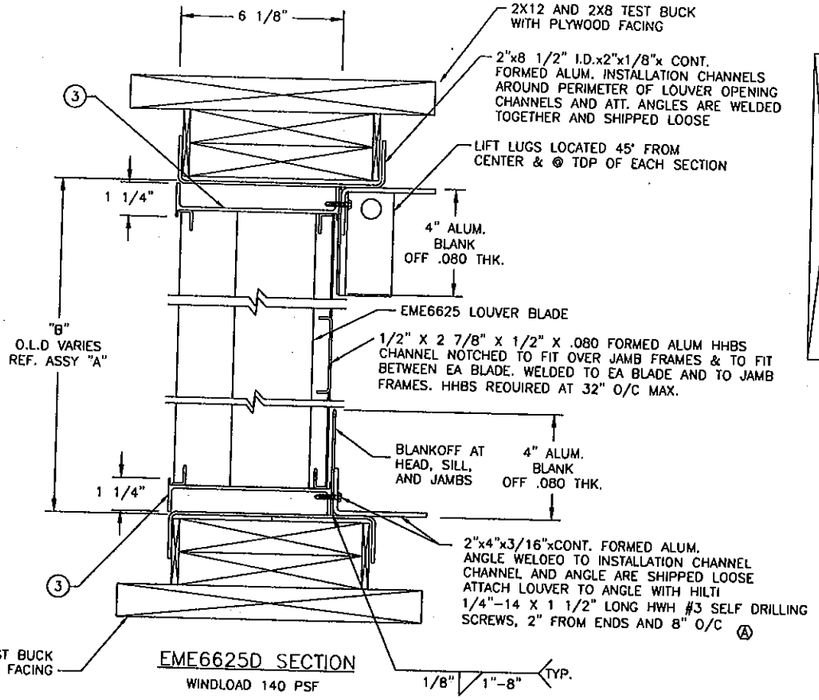

EME6625D SECTION
WINDLOAD 140 PSF

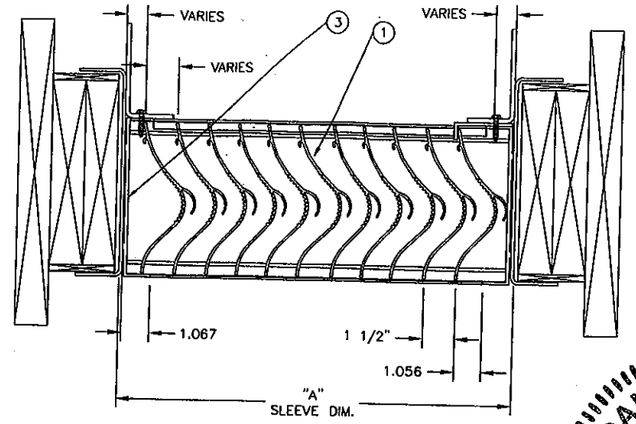

EME6625D PLANVIEW

PART LIST		
ITEM	DESCRIPTION	MATERIAL
1	BLADE	6063-T5
2	JAMB FRAME	6063-T5
3	HEAD FRAME	6063-T5
4	SILL FRAME	6063-T5

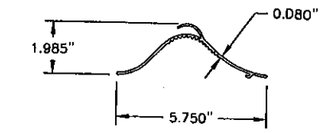

1 BLADE DETAIL
N.T.S.
REF: 70-020748-00B

2 JAMB FRAME DETAIL
N.T.S.
REF: 70-020750-00B

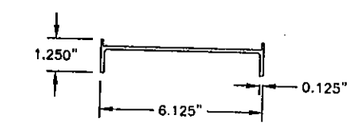

3 HEAD FRAME DETAIL
N.T.S.
REF: 70-020750-00B

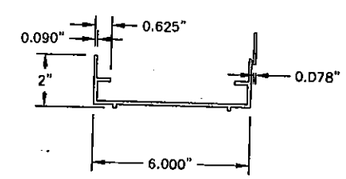

4 SILL FRAME DETAIL
N.T.S.
REF: 70-020749-00B

DANIEL J. RAU
LICENSE
NO. 63636
STATE OF
FLORIDA
PROFESSIONAL ENGINEER
10/28/2010

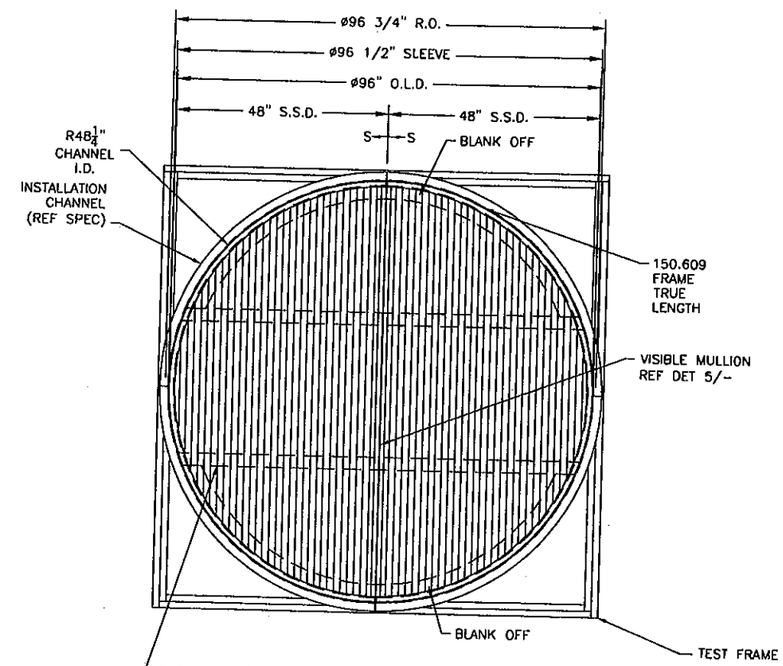

1/2" X 2 7/8" X 1/2" X .080 FORMED ALUM HHBS CHANNEL NOTCHED TO FIT OVER JAMB FRAMES & TO FIT BETWEEN EA BLADE. WELDED TO EA BLADE AND TO JAMB FRAMES. HHBS REQUIRED AT 32" O/C MAX.

ASSEMBLY "D" FRONT VIEW
N.T.S.
QTY: 3 REQUIRED W/ 2 SHIP SECTIONS EACH
INSTALLATION CHANNEL SHIPPED LOOSE IN 4 PIECES

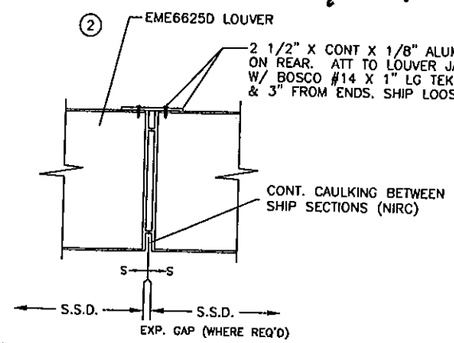

5 MULLION SPLICE DETAIL
N.T.S.
DESIGN PRESSURE RATING: +160/ -140 PSF.

TESTS PERFORMED
TAS-201 LARGE MISSLE IMPACT
TAS-202 UNFORM STATIC AIR PRESSURE TEST
TAS-203 CYCLIC WIND PRESSURE TEST
DESIGN PRESSURE RATING +160 PSF POS., -140 PSF NEG.

PRODUCT REVISED
as complying with the Florida Building Code
Acceptance No 10-1104.05
Expiration Date 11/28/2012
By
Miami Dade Product Control
FOR CONSTRUCTION

SHEET 30 OF 38

CHANGE LETTER	REVISION DESCRIPTION	DRN. BY:	CHK'D. BY:	APPV'D. BY:	APPV'D. BY:	DATE
H	ADDED SHEET NUMBER REVISED TITLE	VMA				
G	ADDED SHEET NUMBER	DLC	DJR	DJR		5/23/7
A	REVISED FASTENER SPACING	DWG	DJR	DJR		4/12/07

ENGINEER OF RECORD: DANIEL J. RAU
ENGINEERING DISCIPLINE: CIVIL ENGINEER
REGISTRATION NUMBER: STATE OF FLORIDA #0063636

DRN. BY: DLC	CHK. BY: DJR	APPV'D. BY: DJR	APPV'D. BY:
DATE: 10/2/6	DATE: 3/2/07	DATE: 3/2/07	DATE:

RUSKIN / SWARTWOUT — 3900 DR. CREAVES RD GRANDVIEW, MO 64030 — PROPRIETARY INFORMATION

PLOT SCALE: NONE
DWG. CERTIFIED BY: DATE:

TITLE: EME6625D TEST LOUVERS ROUND SHAPES

DWG. NO. 60-021563-29D

6063-T5 extruded aluminum with .125 nominal wall thickness.	X
Flange frame is same material and thickness as above.	
BLADES	
6063-T5 extruded aluminum with .091 nominal wall thickness. (Blades are mounted vertically)	X
SCREEN	
5/8" x .040" expanded flattened aluminum bird screen.	
1/2" mesh x .063" aluminum bird screen.	X
18-16 mesh al. insect screen.	
No Screen	
FINISH	
Mill.	X
Kynar (opt).	
Baked enamel (modified fluoropolymer, 50% Kynar, opt).	
Color anodize (opt).	
Clear anodize (opt).	
Color: Ref. Note 15	X
INSTALLATION CHANNELS	
Install. channel 1/8" formed alum. Installation angles, 3/16" formed alum.	X
ACCESSORIES (opt)	
Clip angles.	
Blankoff panel.	

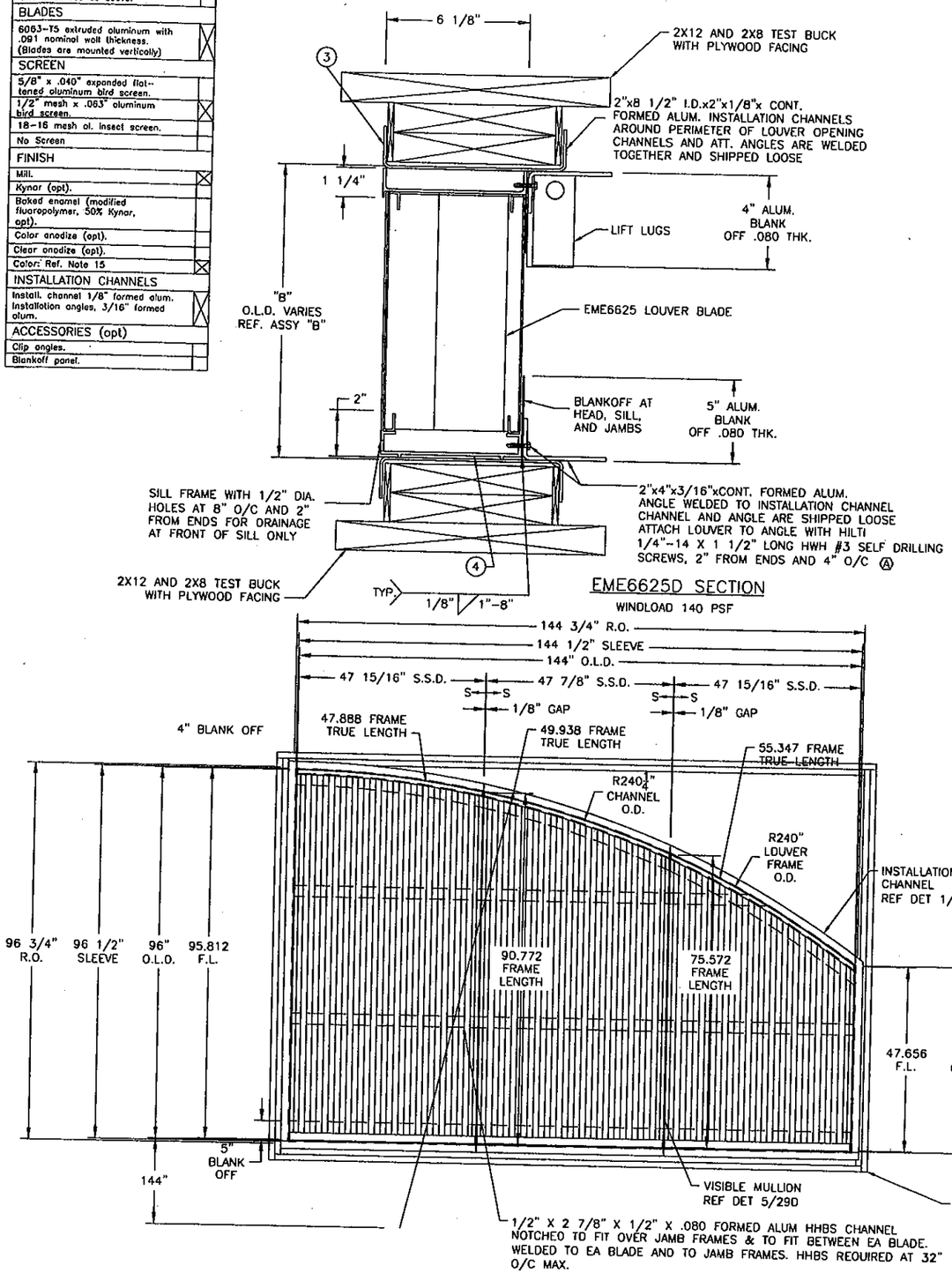

EME6625D SECTION

WINDLOAD 140 PSF

ASSEMBLY "E"

N.T.S.

QTY: 3 REQUIRED W/ 3 SHIP SECTIONS EACH

FRONT VIEW

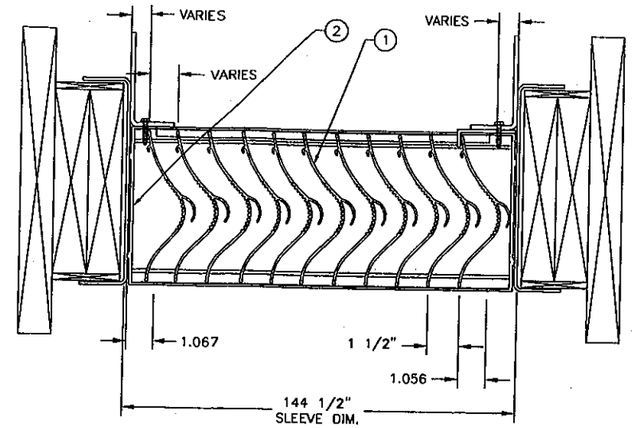

EME6625D PLANVIEW

PART LIST (REF DWG 29D)		
ITEM	DESCRIPTION	MATERIAL
1	BLADE	6063-T5
2	JAMB FRAME	6063-T5
3	HEAD FRAME	6063-T5
4	SILL FRAME	6063-T5

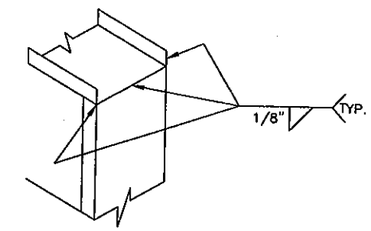

HEAD/SILL JAMB WELD DETAIL

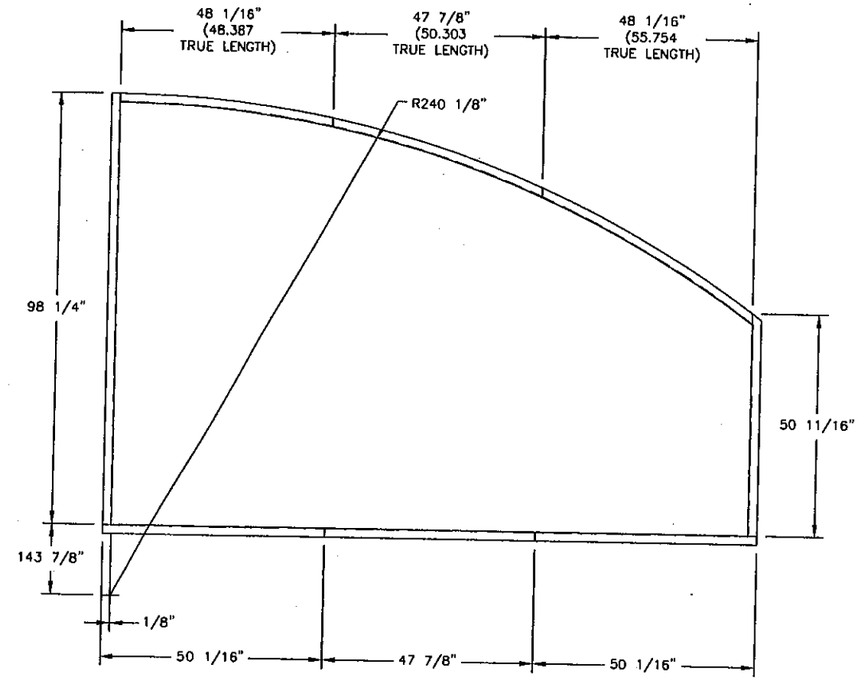

1/- INSTALLATION CHANNEL DETAIL

N.T.S.

DANIEL J. RAU
LICENSE
NO. 63636
STATE OF FLORIDA
PROFESSIONAL ENGINEER
10/28/2010

PRODUCT REVISED
as complying with the Florida Building Code
Acceptance No 10-1104.05
Expiration Date 01/28/2012
By
Miami-Dade Product Control

TESTS PERFORMED

TAS-201 LARGE MISSLE IMPACT

TAS-202 UNFORM STATIC AIR PRESSURE TEST

TAS-203 CYCLIC WIND PRESSURE TEST

DESIGN PRESSURE RATING +160 PSF POS., -140 PSF NEG.

SHEET 31 OF 38

ENGINEER OF RECORD: DANIEL J. RAU						
ENGINEERING DISCIPLINE: CIVIL ENGINEER						
REGISTRATION NUMBER: STATE OF FLORIDA #0063636						
DWN. BY: DLC	CHK. BY: DJR	APP'D. BY: DJR	APP'D. BY:			
DATE: 10/2/6	DATE: 3/2/07	DATE: 3/2/07	DATE:			

CHANGE LETTER	REVISION DESCRIPTION	DWN. BY:	CHK'D. BY:	APP'D. BY:	APP'D. BY:	DATE
Ⓗ	ADDED SHEET NUMBER REVISED TITLE	VMA				
Ⓖ	ADDED SHEET NUMBER	DLC	DJR	DJR		5/23/7
Ⓐ	REVISED FASTENER SPACING	DWG	DJR	DJR		4/12/07

RUSKIN / SWARTWOUT — 3900 DR. GREAVES RD OAKNOVIEW, MO 64030 — PROPRIETARY INFORMATION

PLOT SCALE: NONE

DWG. CONTROLLED BY: DATE:

TITLE: EME6625D TEST LOUVERS ROUND SHAPES

DWG. NO.: 60-021563-30D

FRAME	
6063-T6 extruded aluminum with .095" nominal wall thickness.	X
Flange frame is same material and thickness as above.	
BLADES	
6063-T6 extruded aluminum with .080" nominal wall thickness.	X
SCREEN	
5/8" x .040" expanded flattened aluminum bird screen.	
1/2" mesh x .063" aluminum bird screen.	X
18-16 mesh alum insect screen	
No screen.	
FINISH	
Mill.	X
Kynar (opt).	
Baked enamel (modified fluoropolymer, 50% Kynar, opt).	
Color Anodize (opt).	
Clear Anodize (opt).	
Color:	

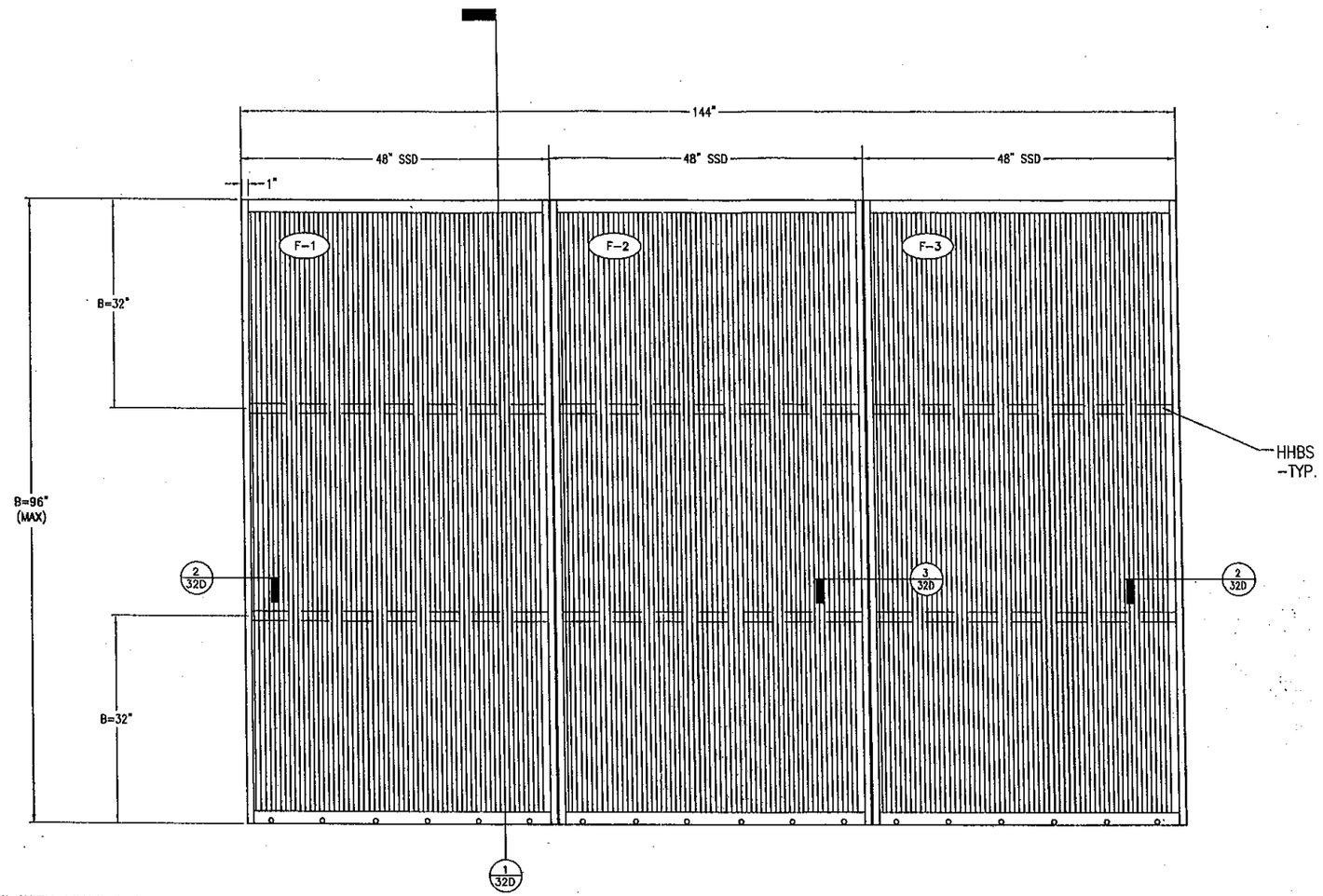

ASSEMBLY 'F' - PERIMETER ANGLE INSTALLATION METHOD

N.T.S.
3-ASSEMBLIES REQ'D W/ 3-SHIP SECTIONS EACH.

FRONT VIEW

TESTS PERFORMED:
TAS-100a WATER PERFORMANCE TEST
TAS-201 LARGE MISSLE IMPACT
TAS-202 UNIFORM STATIC AIR PRESSURE TEST
TAS-203 CYCLIC WIND PRESSURE TEST
DESIGN PRESSURE RATING +160/-140 PSF

NOTES:

1) THE EME6625 HAS BEEN TESTED IN ACCORDANCE WITH MIAMI-DADE COUNTY PROTOCOLS TAS100(A), TAS-201, 202 & 203 FOR LARGE MISSILE IMPACT, UNIFORM PRESSURE AND CYCLIC WIND PRESSURE.

2) THIS LOUVER SYSTEM IS APPROVED FOR APPLICATIONS WITH DESIGN PRESSURES OF +160/-140 PSF OR LESS.

3) THIS LOUVER SYSTEM IS NON-BEARING AND IS NOT DESIGNED TO WITHSTAND BUILDING DEAD OR LIVE LOADS.

4) LOUVER ANCHORS ARE REVIEWED FOR ATTACHMENT INTO STEEL, CONCRETE, MASONRY OR TIMBER SUBSTRUCTURE. MINIMUM EDGE DISTANCE AND EMBEDMENT REQUIREMENTS ARE SHOWN. RUSKIN DOES NOT DETERMINE THE STRUCTURAL INTEGRITY OF THE SUB-STRUCTURE.

5) MAXIMUM SINGLE SECTION SIZE: 48" WIDE X 96" HIGH.

7) MAXIMUM ASSEMBLED LOUVER SIZE: UNLIMITED WIDE X 96" HIGH. MAX. MULLION SPACING IS 48".

8) SECTIONS OR ASSEMBLIES MAY BE STACKED VERTICALLY PROVIDING A SUITABLE STRUCTURAL SUPPORT IS DESIGNED AND INSTALLED BY OTHERS TO SUPPORT ALL LOADS TRANSFERRED FROM THE LOUVER.

DANIEL J. RAU
LICENSE
NO. 63636
STATE OF
FLORIDA
PROFESSIONAL ENGINEER
01/21/2011

FOR OFFICE USE ONLY

PRODUCT REVISED
as complying with the Florida Building Code
Acceptance No 10-1104.05
Expiration Date 01/28/2012
By
Miami-Dade Product Control

ENGINEER OF RECORD	
DANIEL J. RAU	
ENGINEERING DISCIPLINE	
CIVIL ENGINEER	
REGISTRATION NUMBER	
STATE OF FLORIDA #0063636	

DWN. BY: VMA	CHK. BY: DJR	APPV'D. BY: DJR	APPV'D. BY:
DATE: 6/9/09	DATE: 6/14/10	DATE: 6/14/10	DATE:

SHEET 32 OF 38

CHANGE LETTER	REVISION DESCRIPTION	DWN. BY:	CHK'D. BY:	APPV'D. BY:	APPV'D. BY:	DATE

RUSKIN / SWANTWOUT — 3600 DR. MARTIN L. KING, JR. BLVD. DAYTON, OH 45408 — PROPRIETARY INFORMATION

PLOT SCALE: NONE

DWG. CERTIFIED BY: DATE:

TITLE: EME6625D LOUVER, SPEC, ASSY & NOTES CLIP ANGLE INSTALLATION

DWG. NO. 60-021563-31D

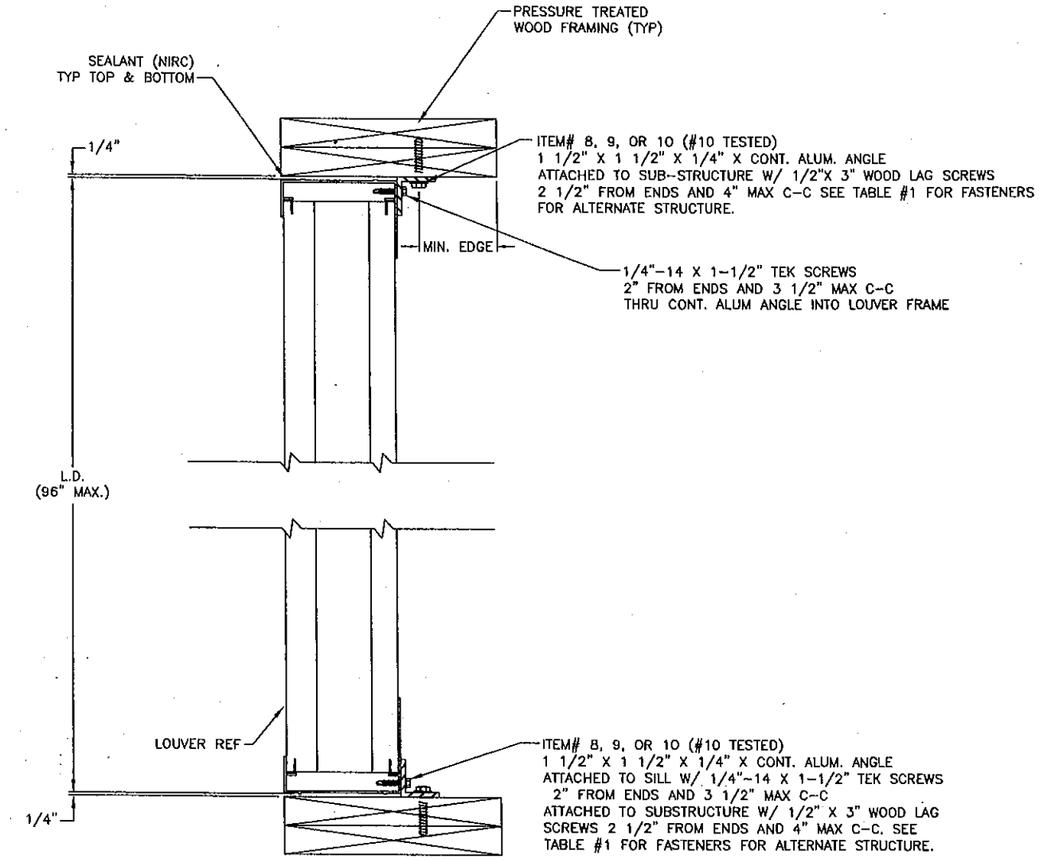

1/31D HEAD & SILL DETAIL: METHOD 1 – AS TESTED – WOOD FRAME
N.T.S.
ALTERNATE STRUCTURE – CONCRETE, STEEL FRAME

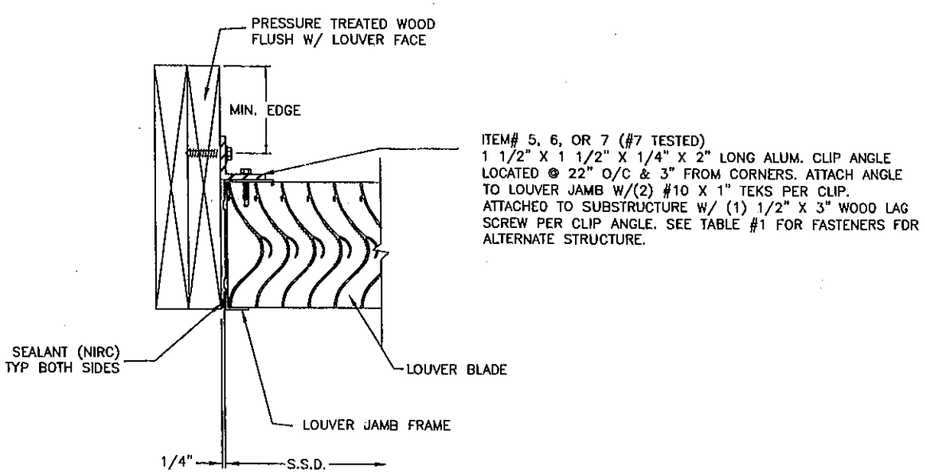

2/31D JAMB DETAIL: METHOD 1 – AS TESTED – WOOD FRAME
N.T.S.
ALTERNATE STRUCTURE – CONCRETE, STEEL FRAME

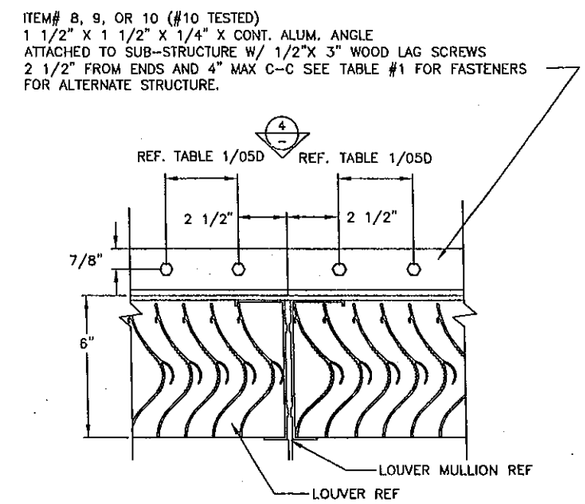

3/31D MULLION DETAIL: METHOD 1 – AS TESTED – WOOD FRAME
N.T.S.
ALTERNATE STRUCTURE – CONCRETE, STEEL FRAME

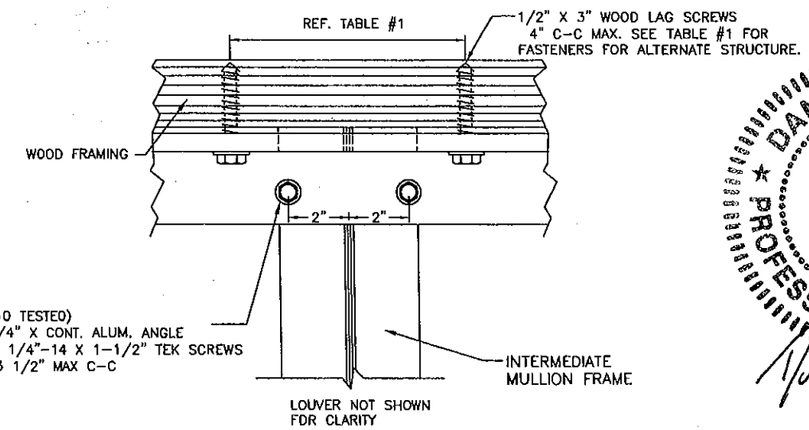

4/– MULLION HEAD DETAIL @ STRUCTURE (SILL SIM): METHOD 1 – AS TESTED – WOOD FRAME
N.T.S. REAR VIEW
ALTERNATE STRUCTURE – CONCRETE, STEEL FRAME

DANIEL J. RAU
LICENSE
NO. 63636
STATE OF
FLORIDA
PROFESSIONAL ENGINEER
01/21/2011

FOR OFFICE USE ONLY

PRODUCT REVISED
as complying with the Florida
Building Code
Acceptance No 10-1104.05
Expiration Date 01/28/2012
By
Miami Dade Product Control

ENGINEER OF RECORD	DANIEL J. RAU
ENGINEERING DISCIPLINE	CIVIL ENGINEER
REGISTRATION NUMBER	STATE OF FLORIDA #0063636

DWN. BY:	CHK'D. BY:	APPV'D. BY:	APPV'D. BY:
VMA	DJR	DJR	
DATE: 9/14/10	DATE: 9/14/10	DATE: 9/14/10	DATE:

SHEET 33 OF 38

CHANGE LETTER	REVISION DESCRIPTION	DWN. BY:	CHK'D. BY:	APPV'D. BY:	APPV'D. BY:	DATE

RUSKIN / SWARTWOUT — 3900 DR. GRAVES RD GRANDVIEW, MO 64030 — PROPRIETARY INFORMATION

TITLE: EME6625D LOUVER CLIP ANGLE INSTALLATION DETAILS

PLOT SCALE: NONE

DWG. CERTIFIED BY: DATE:

DWG. NO. 60-021563-32D

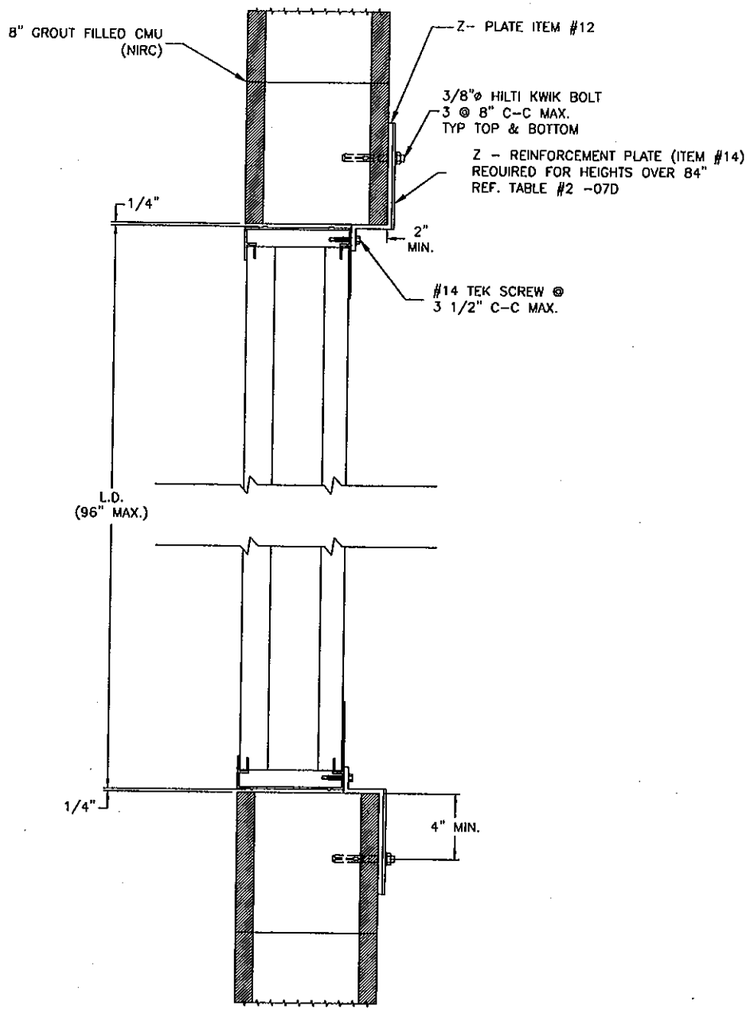

1A/31D HEAD & SILL DETAIL METHOD 2 - GROUT FILLED CMU
N.T.S.

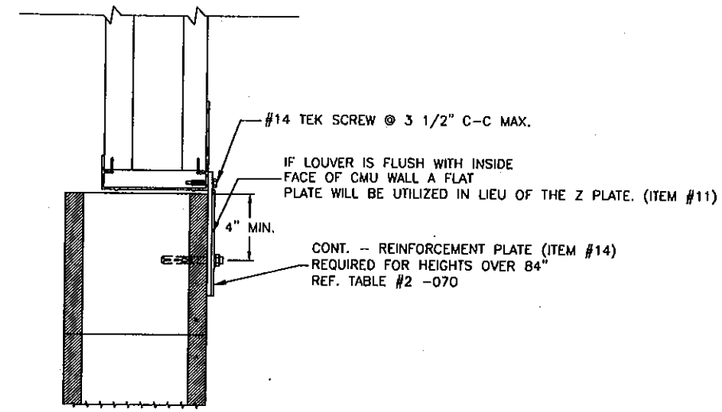

18/31D HEAD & SILL DETAIL: METHOD 2 - GROUT FILLED CMU
N.T.S.

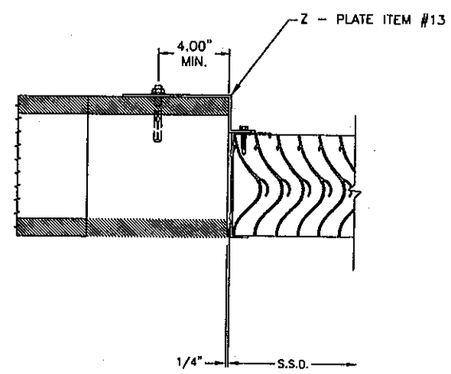

2A/31D JAMB DETAIL METHOD 2 - GROUT FILLED CMU
N.T.S.

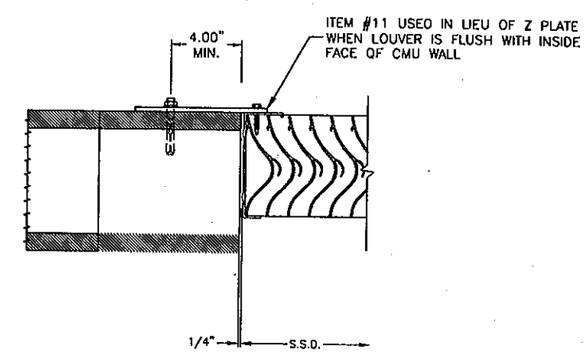

2B/31D JAMB DETAIL METHOD 2 - GROUT FILLED CMU
N.T.S.

DANIEL J. RAU
LICENSE NO. 63636
STATE OF FLORIDA
PROFESSIONAL ENGINEER
10/28/2010

FOR OFFICE USE ONLY

PRODUCT REVISED
as complying with the Florida Building Code
Acceptance No 10-1104.05
Expiration Date 01/25/2012
By
Miami Dade Product Control

ENGINEER OF RECORD: DANIEL J. RAU
ENGINEERING DISCIPLINE: CIVIL ENGINEER
REGISTRATION NUMBER: STATE OF FLORIDA #0063636

DWN. BY:	CHK'D. BY:	APP'D. BY:	APP'D. BY:
VMA	DJR	DJR	
DATE: 9/14/10	DATE: 9/14/10	DATE: 9/14/10	DATE:

CHANGE LETTER	REVISION DESCRIPTION	DWN. BY:	CHK'D. BY:	APP'D. BY:	APP'D. BY:	DATE

RUSKIN / SWARTWOUT — 3900 DR. CREAVES RD GRANDVIEW, MO 64030 — PROPRIETARY INFORMATION

PLOT SCALE: NONE
DWG. CERTIFIED BY: DATE:

TITLE: EME6625D LOUVER CLIP ANGLE INSTALLATION DETAILS

SHEET 34 OF 38

DWG. NO. 60-021563-33D

TABLE #1: APPROVED ATTACHMENTS

MIN. SUPPORT MAT'L	TYPE CONNECTION	ANGLE SLOT WIDTH	MAX SPACING	MIN EMBEDMENT	MIN EDGE
(12 GA MIN) STEEL	5/16"ø A307 OR SDS	3/8"	3 1/2" C-C MAX.	N/A	2 1/2"
(4" MIN) CONCRETE	3/8"ø KB TZ	7/16"	6" C-C MAX.	2"	3"
(8" CMU) GROUT FILLED MASONRY	3/8"ø KBIII	7/16"	8" C-C MAX.	2 1/2"	4"
(2 - 2 X 10) WOOD	1/2"ø X 3 LAG SCREW	9/16"	4" C-C MAX.	3"	2 1/2"

NOTE: ALL FASTENERS MUST BE INSTALLED PER THE MANUFACTURER'S FLORIDA/DADE COUNTY APPROVED INSTALLATION INSTRUCTIONS

TABLE #2: DRAWING CROSS REFERENCE

ITEM	DRAWING	MATERIAL	DESCRIPTION	RUSKIN #
1	60-021563-35D	6063-T6 AL	HEAD FRAME	70-021995-00B
2	60-021563-35D	6063-T6 AL	BLADE	70-021868-00B
3	60-021563-35D	6063-T6 AL	SILL FRAME	70-020749-00B
4	60-021563-35D	6063-T6 AL	JAMB FRAME	70-020750-00B
5	60-021563-36D	6063-T6 AL	CLIP ATTACHMENT (STEEL STRUCTURE)	
6	60-021563-36D	6063-T6 AL	CLIP ATTACHMENT (CONCRETE STRUCTURE)	
7	60-021563-36D	6063-T6 AL	CLIP ATTACHMENT (WOOD STRUCTURE)	
8	60-021563-36D	6063-T6 AL	CONT. CLIP ATTACHMENT (STEEL STRUCTURE)	
9	60-021563-36D	6063-T6 AL	CONT. CLIP ATTACHMENT (CONCRETE STRUCTURE)	
10	60-021563-36D	6063-T6 AL	CONT. CLIP ATTACHMENT (WOOD STRUCTURE)	
11	60-021563-37D	5052-H32 AL	CONT. FLAT PLATE (CMU STRUCTURE)	
12	60-021563-37D	5052-H32 AL	HEAD/SILL CONT. Z PLATE (CMU STRUCTURE)	
13	60-021563-37D	3003-H14 AL	JAMB ANGLE CONT. Z PLATE (CMU STRUCTURE)	
14	60-021563-37D	3003-H14 AL	CONT. REINFORCEMENT PLATE (CMU STRUCTURE)	

DANIEL J. RAU
LICENSE
NO. 63636
STATE OF
FLORIDA
PROFESSIONAL ENGINEER
10/28/2010

FOR OFFICE USE ONLY

PRODUCT REVISED
as complying with the Florida Building Code
Acceptance No 10-1109.05
Expiration Date 01/28/2012
By
Miami-Dade Product Control

ENGINEER OF RECORD: DANIEL J. RAU
ENGINEERING DISCIPLINE: CIVIL ENGINEER
REGISTRATION NUMBER: STATE OF FLORIDA #0063636

DWN. BY:	CHK'D. BY:	APPV'D. BY:	APPV'D. BY:
VMA	DJR	DJR	
DATE: 9/14/10	DATE: 9/14/10	DATE: 9/14/10	DATE:

SHEET 35 OF 38

CHANGE LETTER	REVISION DESCRIPTION	DWN. BY:	CHK'D. BY:	APPV'D. BY:	APPV'D. BY:	DATE

RUSKIN / WARTWOUT — 3950 DR. GRAVES RD OAKVIEW, MO 64029 — PROPRIETARY INFORMATION

PLOT SCALE: NONE
DWG. CERTIFIED BY: DATE:

TITLE: EME6625D LOUVER ALTERNATE ATTACHMENT TABLES

DWG. NO. 60-021563-34D

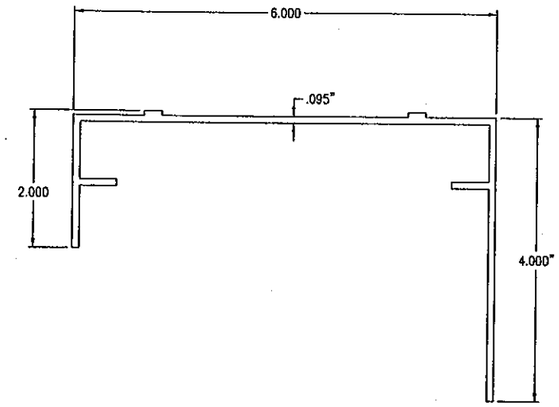

ITEM 1 - HEAD FRAME
RUSKIN# 70-021995-008

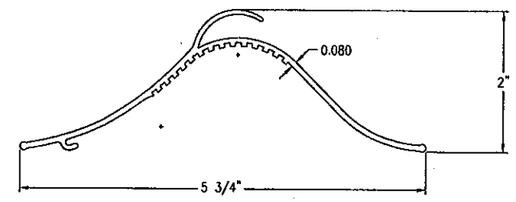

ITEM 2 - LOUVER BLADE
RUSKIN# 70-020748-008

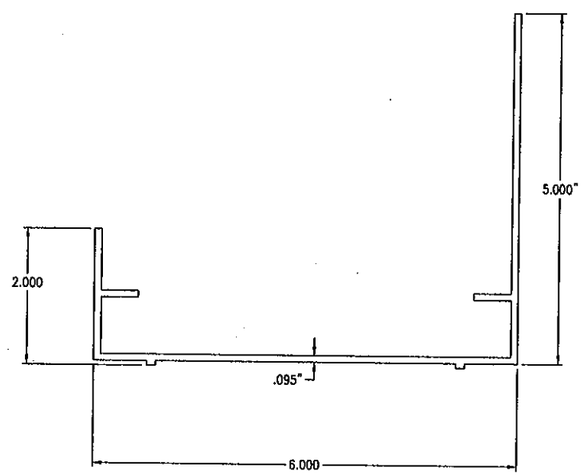

ITEM 3 - SILL FRAME
RUSKIN# 70-022226-008

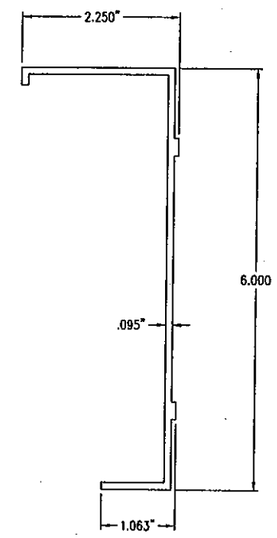

ITEM 4 - JAMB FRAME
RUSKIN# 70-022227-008

DANIEL J. RAU
LICENSE
NO. 63636
STATE OF
FLORIDA
PROFESSIONAL ENGINEER
10/28/2010

FOR OFFICE USE ONLY

PRODUCT REVISED
as complying with the Florida Building Code
Acceptance No 10-1104.05
Expiration Date 01/28/2012
By
Miami Dade Product Control

ENGINEER OF RECORD	DANIEL J. RAU
ENGINEERING DISCIPLINE	CIVIL ENGINEER
REGISTRATION NUMBER	STATE OF FLORIDA #0063636

DWN. BY:	CHK'D. BY:	APPV'D. BY:	APPV'D. BY:
VMA	DJR	DJR	
DATE: 9/14/10	DATE: 9/14/10	DATE: 9/14/10	DATE:

SHEET 36 OF 38

CHANGE LETTER	REVISION DESCRIPTION	DWN. BY:	CHK'D. BY:	APPV'D. BY:	APPV'D. BY:	DATE

RUSKIN / SWARTWOUT — 3600 SR. CREMCE RD CINCINNATI, NO 54020 — PROPRIETARY INFORMATION

PLOT SCALE: NONE

DWG. CERTIFIED BY: DATE:

TITLE: EME6625D LOUVER ALTERNATE ATTACHMENT TABLES

DWG. NO. 60-021563-35D

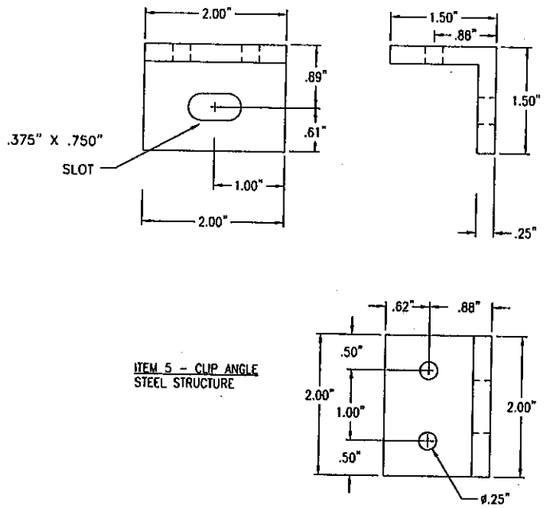

ITEM 5 - CLIP ANGLE
STEEL STRUCTURE

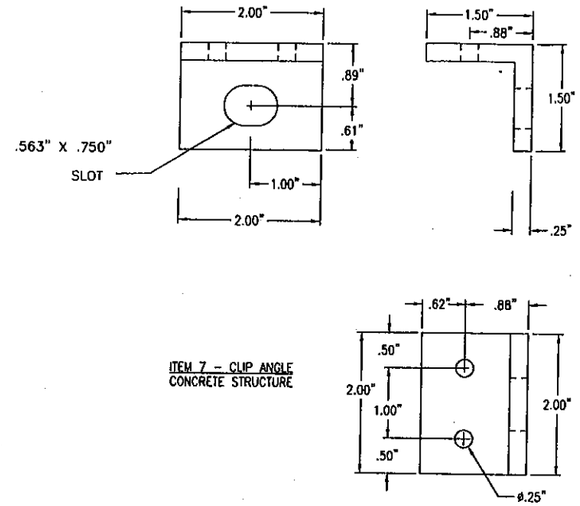

ITEM 7 - CLIP ANGLE
CONCRETE STRUCTURE

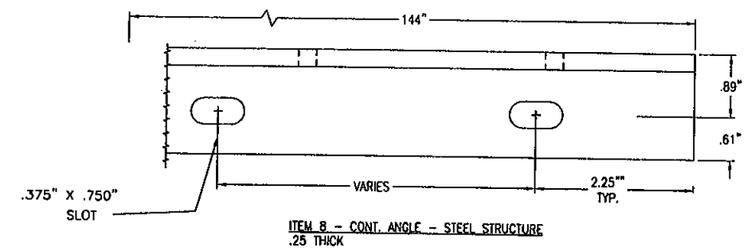

ITEM 8 - CONT. ANGLE - STEEL STRUCTURE
.25 THICK

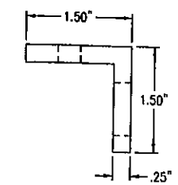

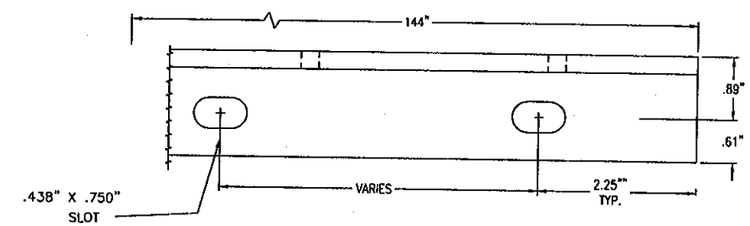

ITEM 9 - CONT. ANGLE - CONCRETE STRUCTURE
.25 THICK

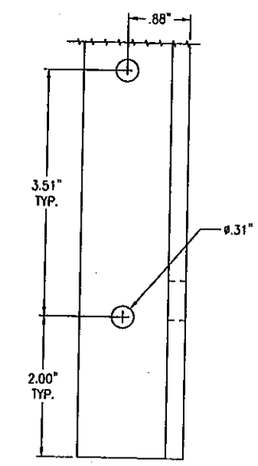

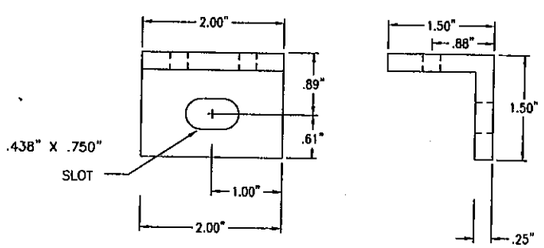

ITEM 6 - CLIP ANGLE
WOOD STRUCTURE

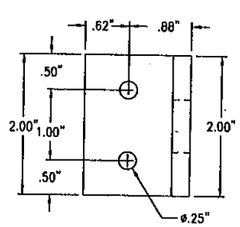

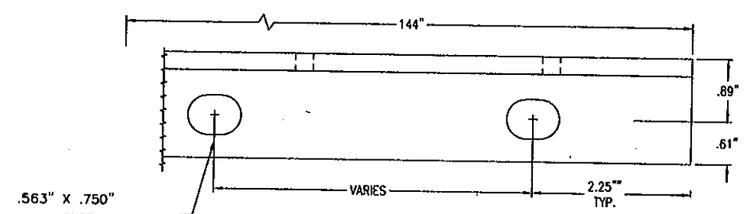

ITEM 10 - CONT. ANGLE - WOOD STRUCTURE
.25 THICK

DANIEL J. RAU
LICENSE
NO. 63636
STATE OF
FLORIDA
PROFESSIONAL ENGINEER
10/28/2010

FOR OFFICE USE ONLY

PRODUCT REVISED
as complying with the Florida Building Code
Acceptance No 10-1104.05
Expiration Date 01/24/2012
By
Miami/Dade Product Control

ENGINEER OF RECORD	DANIEL J. RAU
ENGINEERING DISCIPLINE	CIVIL ENGINEER
REGISTRATION NUMBER	STATE OF FLORIDA #0063636

DWN. BY:	CHK'D. BY:	APP'D. BY:	APP'D. BY:
VMA	DJR	DJR	
DATE: 9/14/10	DATE: 9/14/10	DATE: 9/14/10	DATE:

SHEET 37 OF 38

CHANGE LETTER	REVISION DESCRIPTION	DWN. BY:	CHK'D. BY:	APP'D. BY:	APP'D. BY:	DATE

RUSKIN / SWARTWOUT
2500 DR. CROMER RD
CHANDLER, NC 28030
PROPRIETARY INFORMATION

PLOT SCALE: NONE
DWG. CERTIFIED BY: DATE:

TITLE: EME6625D LOUVER ALTERNATE ATTACHMENT TABLES

DWG. NO. 60-021563-36D

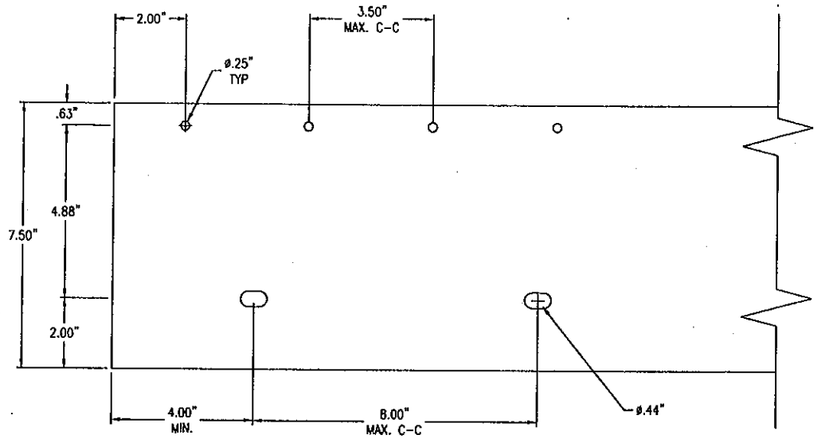

ITEM 11 - CONT. FLAT PLATE
.25 THICK - 5052-H32 AL
REQUIRES ITEM #14 FOR LOUVERS OVER 84" IN HEIGHT

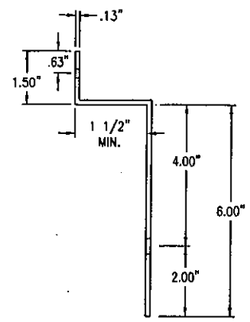

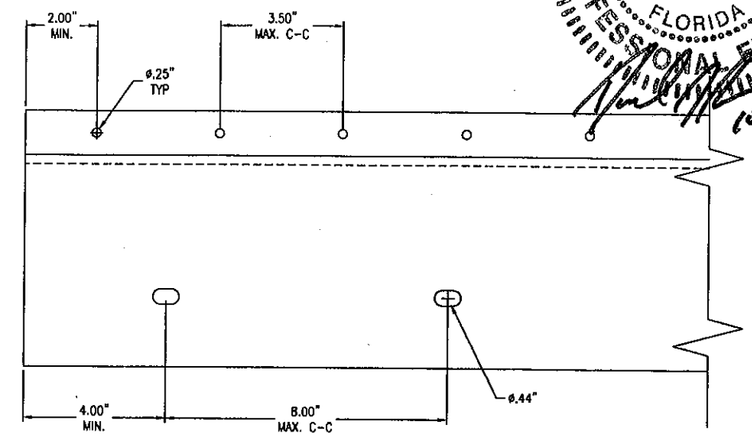

ITEM 13 - JAMB CONT. Z SHAPE PLATE
.125 THICK - 3003-H14 AL

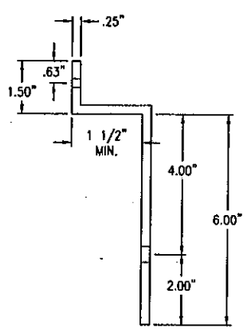

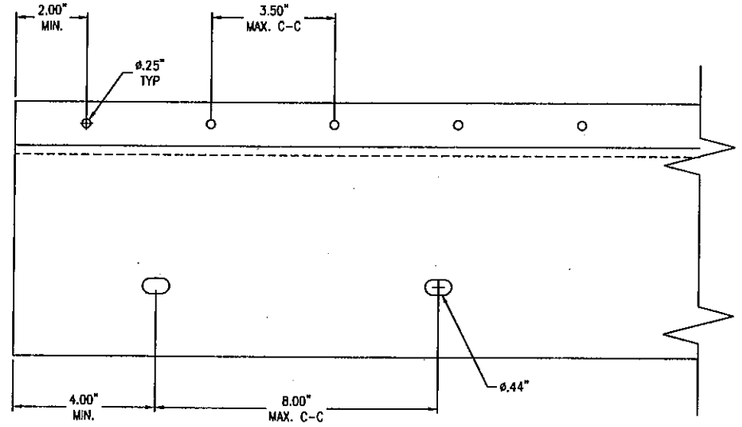

ITEM 12 - HEAD/SILL CONT. Z SHAPE PLATE
5052-H32 AL

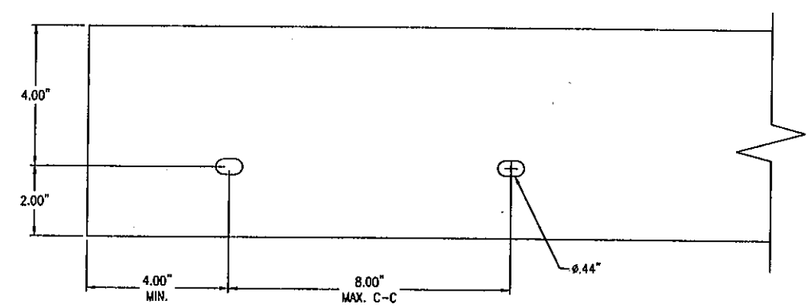

ITEM 14 - CONT. - REINFORCEMENT PLATE
.125" THICK - 3003-H14 AL

TABLE #2			
LOUVER HEIGHT	ITEM #12 Z PLATE THICKNESS	MATERIAL	NOTE
6" - 21"	.125"	3003-H14 AL	--
21" - 84"	.25"	5052-H32 AL	-
84" - 120"	.25"	5052-H32 AL	NEED ITEM #14

FOR OFFICE USE ONLY

PRODUCT REVISED
as complying with the Florida
Building Code
Acceptance No 10-1104.05
Expiration Date 01/28/2012
By
Miami Dade Product Control

DANIEL J. RAU
LICENSE
NO. 63636
STATE OF
FLORIDA
PROFESSIONAL ENGINEER
10/28/2010

ENGINEER OF RECORD
DANIEL J. RAU
ENGINEERING DISCIPLINE
CIVIL ENGINEER
REGISTRATION NUMBER
STATE OF FLORIDA #0063636

DWN. BY:	CHK. BY:	APPV'D. BY:	APPV'D. BY:
VMA	DJR	DJR	
DATE: 8/14/10	DATE: 8/14/10	DATE: 8/14/10	DATE:

SHEET 38 OF 38

CHANGE LETTER	REVISION DESCRIPTION	DWN. BY:	CHK'D. BY:	APPV'D. BY:	APPV'D. BY:	DATE

RUSKIN / SWARTWOUT — 3920 DR. DREAMS RD DANDVIEW, MO 64031 — PROPRIETARY INFORMATION

PLOT SCALE: NONE
DWG. CERTIFIED BY: DATE:

TITLE: EME6625D LOUVER ALTERNATE ATTACHMENT TABLES

DWG. NO. 60-021563-37D