MIAMI-DADE COUNTY
DEPARTMENT OF PERMITTING, ENVIRONMENT, AND REGULATORY AFFAIRS (PERA)
BOARD AND CODE ADMINISTRATION DIVISION

MIAMI-DADE COUNTY
PRODUCT CONTROL SECTION
11805 SW 26 Street, Room 208
Miami, Florida 33175-2474
T (786) 315-2590 F (786) 315-2599
www.miamidade.gov/pera/

NOTICE OF ACCEPTANCE (NOA)

JELD-WEN Inc.
3737 Lakeport Blvd
Klamath Falls, OR 97601

SCOPE:

This NOA is being issued under the applicable rules and regulations governing the use of construction materials. The documentation submitted has been reviewed and accepted by Miami-Dade County PERA -Product Control Section to be used in Miami Dade County and other areas where allowed by the Authority Having Jurisdiction (AHJ).

This NOA shall not be valid after the expiration date stated below. The Miami-Dade County Product Control Section (In Miami Dade County) and/or the AHJ (in areas other than Miami Dade County) reserve the right to have this product or material tested for quality assurance purposes. If this product or material fails to perform in the accepted manner, the manufacturer will incur the expense of such testing and the AHJ may immediately revoke, modify, or suspend the use of such product or material within their jurisdiction. PERA reserves the right to revoke this acceptance, if it is determined by Miami-Dade County Product Control Section that this product or material fails to meet the requirements of the applicable building code.

This product is approved as described herein, and has been designed to comply with the Florida Building Code, including the High Velocity Hurricane Zone.

DESCRIPTION: The **Jeld-Wen** Series **"Custom Collection"** Single **or** Double **or** 1" Clipped Mullion

APPROVAL DOCUMENT: Drawing No. **JEND0022**, titled "Clipped Aluminum Mullion" Sheets 1 through 8 of 8, prepared by Engineering Express 08/02/10 and last revised on 04-12-12, signed and sealed by Frank L. Bennardo, P.E., bearing the Miami-Dade County Product Control Revision stamp with the Notice of Acceptance number and expiration date by the Miami-Dade County Product Control Section.

MISSILE IMPACT RATING: Large and Small Missile Impact

Limitations:

1. This Clipped Mullion to be used with JELD-WEN windows products having current NOA(s) with calculated average tributary width and span per elevation sheet 1 and using Design Pressure charts per sheet 6, 7 and 8. Deviations from this clipped mullion approval will require one-time approval from Miami-Dade County.
2. Un-clipped mullion detail 4/4 in sheet 4 is for illustration only, such installation is under **separate** NOA approval & shall meet unclipped mullion end anchors, embedment, edge distance and OC spacing.
3. Design pressure charts in sheets **5** & **6** are only applicable with anchor clip into wood substrate per sheet **4**.
4. Design pressure charts in sheets 7 are only applicable with **alternate** anchor clip into wood or concrete substrates per sheet **5**.

LABELING: Each unit shall bear a permanent label with the manufacturer's name or logo, **Bend**, **Oregon** and series and following statement: "Miami-Dade County Product Control Approved", unless otherwise noted herein.

RENEWAL of this NOA shall be considered after a renewal application has been filed and there has been no change in the applicable building code negatively affecting the performance of this product.

TERMINATION of this NOA will occur after the expiration date or if there has been a revision or change in the materials, use, and/or manufacture of the product or process. Misuse of this NOA as an endorsement of any product, for sales, advertising or any other purposes shall automatically terminate this NOA. Failure to comply with any section of this NOA shall be cause for termination and removal of NOA.

ADVERTISEMENT: The NOA number preceded by the words Miami-Dade County, Florida, and followed by the expiration date may be displayed in advertising literature. If any portion of the NOA is displayed, then it shall be done in its entirety.

INSPECTION: A copy of this entire NOA shall be provided to the user by the manufacturer or its distributors and shall be available for inspection at the job site at the request of the Building Official.

This NOA **revises NOA # 08-1015.07** and consists of this page 1 and evidence pages E-1, as well as approval document mentioned above.

The submitted documentation was reviewed by **Ishaq I. Chanda, P.E.**

4/23/12

MIAMI-DADE COUNTY APPROVED

NOTICE OF ACCEPTANCE: EVIDENCE SUBMITTED

A. DRAWINGS

1. Manufacturer's die drawings and sections (transferred from file # **08-1015.07**).
2. Drawing No. **JEND0022**, titled "Clipped Aluminum Mullion" Sheets 1 through 8 of 8, prepared by Engineering Express 08/02/10 and last revised on 04-12-12, signed and sealed by Frank L. Bennardo, P.E.

B. TESTS

1. Test reports on: 1) Air Infiltration Test, per FBC, TAS 202-94
   2) Uniform Static Air Pressure Test, Loading per FBC TAS 202-94
   3) Water Resistance Test, per FBC, TAS 202-94
   4) Large Missile Impact Test per FBC, TAS 201-94
   5) Cyclic Wind Pressure Loading per FBC, TAS 203-94
   6) Forced Entry Test, per FBC 2411 3.2.1, TAS 202-94

   Along with marked-up drawings and installation diagram of 1" Clipped Alum Mullion, prepared by National Certified Testing Lab, Test Report No. **NCTL-210-3729-1**, originally issued on 05/04/11 and revised by an addendum letter dated 11/07/11 and marked-up drawings issued by NCTL, both signed and sealed by Jerard J. Ferrara, P.E.
2. Test reports on 1) Air Infiltration Test, per FBC, TAS 202-94
   2) Uniform Static Air Pressure Test, Loading per FBC, TAS 202-94
   3) Water Resistance Test, per FBC, TAS 202-94 (None)
   4) Large Missile Impact Test per FBC, TAS 201-94
   5) Cyclic Wind Pressure Loading per FBC, TAS 203-94
   4) Forced Entry Test, per FBC TAS 202-94

   Along with marked-up drawings and installation diagram of Single & Double Clipped Alum Mullion, prepared by National Certified Testing Lab, Test Report No. **NCTL-210-3491-2**, originally issued on 12/03/07 and revised and re-issued on 02/27/09, signed and sealed by Jerard J. Ferrara, P.E. (transferred from file # **08-1015.07**)

C. CALCULATIONS

1. Statement letter of conformance to FBC 2010, dated April 11, 2012 issued by Engineering Express, signed and sealed by Frank L. Bennardo, P.E.
2. Anchor verification calculations and structural analysis, complying with FBC-2007, prepared by Engineering Express, dated 08/05/10, 07/18/11 and last revised on 03/11/2012, all signed and sealed by Frank L. Bennardo, P.E.

D. QUALITY ASSURANCE

1. Miami Dade Department of Permitting, Environment, and Regulatory Affairs (PERA).

E. MATERIAL CERTIFICATIONS

1. None

F. STATEMENTS

1. Statement letter of conformance to FBC 2010, prepared by Engineering Express, both dated 04/11/12, signed and sealed by Frank L. Bennardo, P.E.
2. Statement letter of conformance to FBC 2007 and letter of no financial interest, prepared by Engineering Express, both dated 10/21/10, signed and sealed by Frank L. Bennardo, P.E.
3. Lab compliance as part of the above referenced test reports, along with addendum letters cited above.

G. OTHER

1. This NOA **revises** NOA # **08-1015.07**, expiring on Aug. 19, 2014.
2. Test proposal # **07-3760** dated Nov. 20, 2007, approved by BCCO.

Ishaq I. Chanda, P.E.
Product Control Examiner
NOA No 10-1115.03
Expiration Date: August 19, 2014
Approval Date: May 03, 2012

CLIPPED ALUMINUM MULLION

LARGE AND SMALL MISSILE IMPACT RESISTANT

NOTE: MULLIONS IN DETAILS 1/1, 2/1, AND 3/1 ARE SHOWN TO ILLUSTRATE THE DETERMINATION OF MULLION SPANS AND TRIBUTARY WIDTHS. ALL MULLIONS SHOWN IN THE ABOVE REFERENCED DETAILS MAY BE ANY MULLION APPROVED HEREIN, WITH SPANS, TRIBUTARIES, AND DESIGN PRESSURES PER DESIGN SCHEDULES ON SHEETS 6, 7, AND 8.

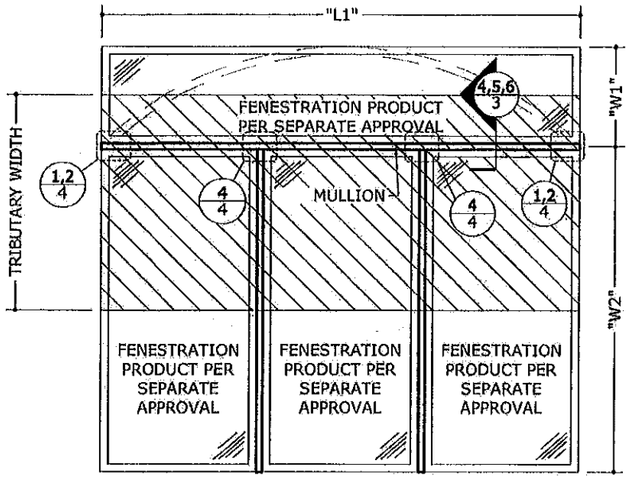

NOTES:
1. NUMBER OF FENESTRATION PRODUCTS UNDERNEATH TRANSOM MAY BE UNLIMITED, PROVIDED THAT MULLION LIMITATIONS NOTED HEREIN ARE NOT EXCEEDED.
2. FENESTRATION PRODUCTS AND ANCHORAGE TO MULLIONS SHALL BE PER SEPARATE APPROVAL.
3. ALLOWABLE DESIGN PRESSURES SHALL BE DETERMINED FROM DESIGN SCHEDULES.
4. MULLION SPAN AND TRIBUTARY WIDTH SHALL BE DETERMINED AS FOLLOWS:
   - 4.1. MULLION:
     - 4.1.1. MULLION SPAN = L1
     - 4.1.2. TRIBUTARY WIDTH = (W1 + W2) / 2
     - 4.1.3. SEE ALLOWABLE MULLION SPAN, TRIBUTARY WIDTH AND DESIGN PRESSURE PER SHEETS 6, 7 AND 8.

PRODUCT REVISED as complying with the Florida Building Code Acceptance No. 10-1115.03 Expiration Date 04.19.2014 Ishaq I. Chanda [redacted]

1/1 MULLIONED FENESTRATION PRODUCTS WITH TRANSOM

N.T.S. EXTERIOR ELEV.

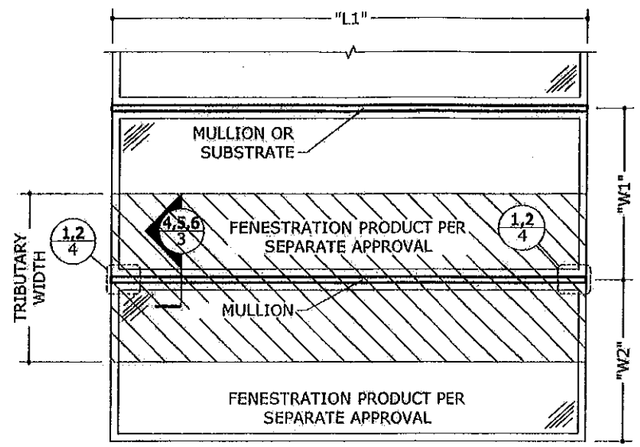

NOTES:
1. UNLIMITED NUMBER OF FENESTRATION PRODUCTS MAY BE MULLIONED TOGETHER AS SHOWN, PROVIDED THAT MULLION LIMITATIONS NOTED HEREIN ARE NOT EXCEEDED.
2. FENESTRATION PRODUCTS AND ANCHORAGE TO MULLIONS SHALL BE PER SEPARATE APPROVAL.
3. ALLOWABLE DESIGN PRESSURES SHALL BE DETERMINED FROM DESIGN SCHEDULES.
4. MULLION SPAN AND TRIBUTARY WIDTH SHALL BE DETERMINED AS FOLLOW:
   - 4.1. MULLION:
     - 4.1.1. MULLION SPAN = L1
     - 4.1.2. TRIBUTARY WIDTH = (W1 + W2) / 2
     - 4.1.3. SEE ALLOWABLE MULLION SPAN, TRIBUTARY WIDTH AND DESIGN PRESSURE PER SHEETS 6, 7 AND 8.

2/1 FENESTRATION PRODUCTS MULLIONED VERTICALLY

N.T.S. EXTERIOR ELEV.

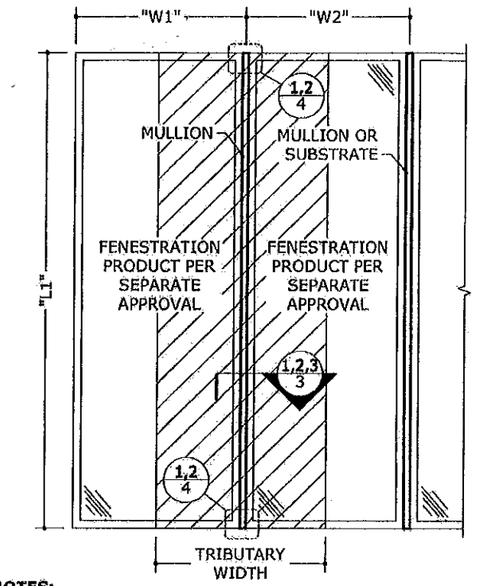

NOTES:
1. UNLIMITED NUMBER OF FENESTRATION PRODUCTS MAY BE MULLIONED TOGETHER AS SHOWN, PROVIDED THAT MULLION LIMITATIONS NOTED HEREIN ARE NOT EXCEEDED.
2. FENESTRATION PRODUCTS AND ANCHORAGE TO MULLIONS SHALL BE PER SEPARATE APPROVAL.
3. ALLOWABLE DESIGN PRESSURES SHALL BE DETERMINED FROM DESIGN SCHEDULES.
4. MULLION SPAN AND TRIBUTARY WIDTH SHALL BE DETERMINED AS FOLLOW:
   - 4.1. MULLION:
     - 4.1.1. MULLION SPAN = L1
     - 4.1.2. TRIBUTARY WIDTH = (W1 + W2) / 2
     - 4.1.3. SEE ALLOWABLE MULLION SPAN, TRIBUTARY WIDTH AND DESIGN PRESSURE PER SHEETS 6, 7 AND 8.

3/1 FENESTRATION PRODUCTS MULLIONED HORIZONTALLY

N.T.S. EXTERIOR ELEV.

MAXIMUM ALLOWABLE DESIGN PRESSURES:

AS NOTED IN DESIGN SCHEDULES

DESIGN NOTES:

POSITIVE AND NEGATIVE DESIGN PRESSURES CALCULATED FOR USE WITH THIS SYSTEM SHALL BE DETERMINED BY OTHERS ON A JOB-SPECIFIC BASIS IN ACCORDANCE WITH THE GOVERNING CODE. SITE-SPECIFIC PRESSURE REQUIREMENTS AS DETERMINED IN ACCORDANCE WITH ASCE 7-10 AND CHAPTER 1609 OF THE 2010 FLORIDA BUILDING CODE SHALL BE LESS THAN OR EQUAL TO THE POSITIVE OR NEGATIVE DESIGN PRESSURE CAPACITY VALUES LISTED HEREIN FOR ANY ASSEMBLY AS SHOWN.

GENERAL NOTES:

1. THIS SPECIFICATION HAS BEEN DESIGNED AND SHALL BE FABRICATED IN ACCORDANCE WITH THE REQUIREMENTS OF THE 2010 FLORIDA BUILDING CODE FOR USE WITHIN AND OUTSIDE THE HIGH VELOCITY HURRICANE ZONE, PER TAS 201 / 202 / 203 AND THE 2005 ALUMINUM DESIGN MANUAL. DESIGN CRITERIA BEYOND AS STATED HEREIN MAY REQUIRE ADDITIONAL SITE-SPECIFIC SEALED ENGINEERING.
2. NO 33-1/3% INCREASE IN ALLOWABLE STRESS HAS BEEN USED IN THE DESIGN OF THIS SYSTEM. WIND LOAD DURATION FACTOR Cd=1.6 HAS BEEN USED FOR WOOD ANCHOR DESIGN.
3. POSITIVE AND NEGATIVE DESIGN PRESSURES CALCULATED FOR USE WITH THIS SYSTEM SHALL BE DETERMINED BY OTHERS ON A JOB-SPECIFIC BASIS IN ACCORDANCE WITH THE GOVERNING CODE.
4. THE SYSTEM DETAILED HEREIN IS GENERIC AND DOES NOT PROVIDE INFORMATION FOR A SPECIFIC SITE. FOR SITE CONDITIONS OUTSIDE THE HVHZ DIFFERENT FROM THE CONDITIONS DETAILED HEREIN, A LICENSED ENGINEER OR REGISTERED ARCHITECT SHALL PREPARE SITE SPECIFIC DOCUMENTS FOR USE IN CONJUNCTION WITH THIS DOCUMENT, TO BE REVIEWED BY THE AUTHORITY HAVING JURISDICTION. DEVIATIONS FROM THIS APPROVAL WITHIN THE HVHZ SHALL REQUIRE A ONE-TIME PRODUCT APPROVAL FROM THE MIAMI-DADE COUNTY BNC.
5. PERMIT HOLDER SHALL VERIFY THE ADEQUACY OF THE EXISTING STRUCTURE TO WITHSTAND SUPERIMPOSED LOADS. PRESSURE TREATED WOOD BUCKS (BY OTHERS) SHALL BE ANCHORED PROPERLY TO TRANSFER LOADS TO THE EXISTING STRUCTURE.
6. ALL FENESTRATION PRODUCTS TO BE USED WITH THESE MULLIONS SHALL MEET ALL APPLICABLE CODE REQUIREMENTS, e.g. WIND LOAD RESISTANCE, AIR & WATER INFILTRATION, FORCED ENTRY, SAFEGUARDS, ETC.
7. ALLOWABLE DESIGN PRESSURE ON THE MULLED ASSEMBLY SHALL BE GOVERNED BY THE LESSER ALLOWABLE DESIGN PRESSURE OF THE MULLION (PER DESIGN SCHEDULES HEREIN) OR OF THE FENESTRATION PRODUCTS (PER SEPARATE APPROVAL).
8. CLIPPED MULLIONS MAY BE MOUNTED VERTICALLY OR HORIZONTALLY AS APPLICABLE.
9. ANCHORS SHALL BE INSTALLED IN ACCORDANCE WITH MANUFACTURERS' RECOMMENDATIONS.
10. WOOD HOST STRUCTURE SHALL BE "SOUTHERN PINE" G=0.55 OR GREATER DENSITY.
11. CONCRETE HOST STRUCTURES SHALL BE 3192 PSI MIN. UN-CRACKED CONCRETE.
12. MINIMUM ANCHOR EMBEDMENT SHALL BE AS NOTED IN HEREIN. MINIMUM EMBEDMENT AND EDGE DISTANCE EXCLUDES STUCCO, FOAM, BRICK, AND OTHER WALL FINISHES.
13. MULLIONS SHOWN HEREIN ARE LARGE MISSILE IMPACT RESISTANT. VERIFY IMPACT RESISTANCE OF FENESTRATION PRODUCTS TO BE USED WITH THESE MULLIONS.
14. MULLIONS SHOWN HEREIN MAY BE USED IN LARGE MISSILE IMPACT, SMALL MISSILE IMPACT, AND NON-IMPACT APPLICATIONS.
15. THE CONTRACTOR IS RESPONSIBLE TO INSULATE ALL MEMBERS FROM DISSIMILAR MATERIALS TO PREVENT ELECTROLYSIS, I.E. ALUMINUM PER F.B.C. 2003.8.4.

FRANK L. BENNARDO, P.E. # REG. 46549
STATE OF FLORIDA
04/12/2012
No. 46549
ENGINEERING EXPRESS, INC.
160 SW 12th AVENUE
DEERFIELD BEACH, FL 33442
Ph: (954) 354-0660 Fax: (954) 354-0673
WWW.ENGEXP.COM
CERT OF AUTH #8985
A FRANK L. BENNARDO, P.E., INC. INNOVATOR

JELDWEN
3737 LAKEPORT BOULEVARD
KLAMATH FALLS, OREGON 97624
PHONE: 1-800-JELDWEN (1-800-535-3936)

CLIPPED ALUMINUM MULLION
LARGE MISSILE IMPACT RESISTANT
MIAMI-DADE NOTICE OF ACCEPTANCE

REMARKS	DRWN	CHKD	DATE
INIT ISSUE	KL	FLB	08/02/10
REV. PER BNC COMMENTS	KL	FLB	07/06/11
ADDT. COMMENTS	KL	FLB	01/05/11
UPDATE FOR 2010 FBC	CSL	FLB	04/11/12

10-JWN-0022

SCALE: 03

PAGE DESCRIPTION:

8

1

\\SERVER01\FileCabinet\01 Project Files\Jeld-Wen (JWN)\2010\10-JWN-0022_03c Clipped Aluminum Mullion (NOA)\10-JWN-0022_03c Clipped Aluminum Mullion (NOA).dwg
04/12/2012 - 1:55pm

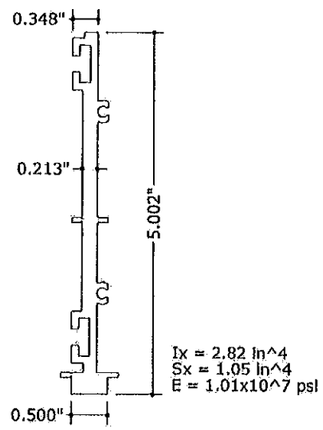

1 SINGLE MULLION
N.T.S. 6063-T6 ALUM

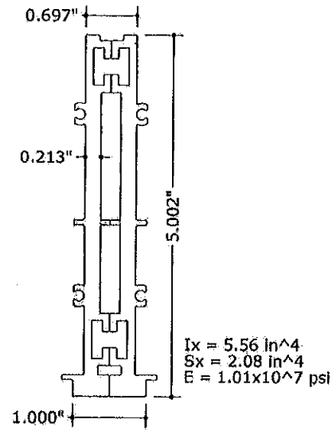

2 DOUBLE MULLION
N.T.S. 6063-T6 ALUM

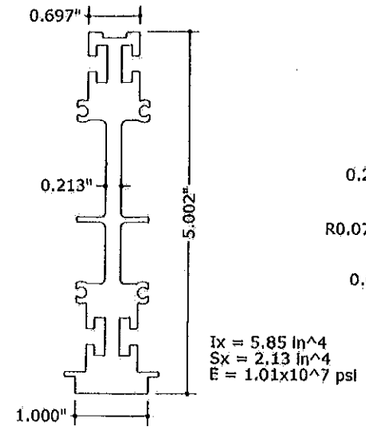

3 1" MULLION
N.T.S. 6063-T6 ALUM

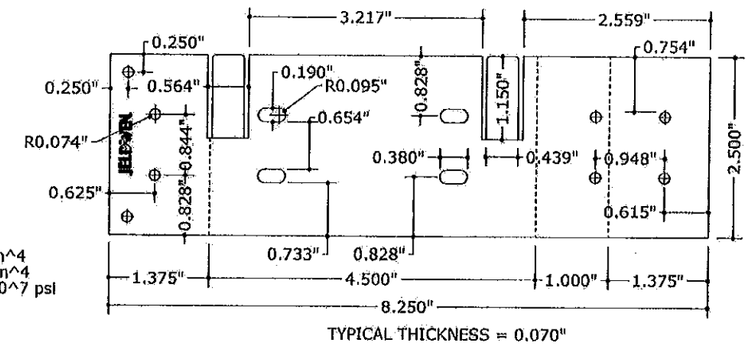

4 MULLION CLIP
N.T.S. A36 GALV. STEEL

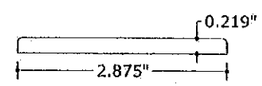

5 SINGLE MULLION INTERIOR COVER
N.T.S. WOOD

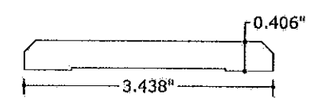

6 DOUBLE MULLION INTERIOR COVER
N.T.S. WOOD

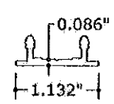

7 SINGLE MULLION EXTERIOR COVER
N.T.S. 6063-T5 ALUM

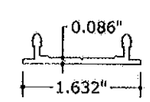

8 DOUBLE MULLION EXTERIOR COVER
N.T.S. 6063-T5 ALUM

PRODUCT REVISED
In compliance with the Florida Building Code
Application No. 10-1115.03
Expiration Date 04.19.2014
Miami-Dade Product Control

FRANK L. BENNARDO, P.E.
LICENSE No. 46549
STATE OF FLORIDA
PROFESSIONAL ENGINEER
04/12/2012

ENGINEERING EXPRESS®
160 SW 12th AVENUE
DEERFIELD BEACH, FL 33442
Ph: (954) 354-0660 Fax: (954) 354-0443
WWW.ENGEXP.COM
CERT OF AUTH #8685
A. FRANK L. BENNARDO, P.E., INC.

JELDWEN
3737 LAKEPORT BOULEVARD
KLAMATH FALLS, OREGON 97624
PHONE: 1-800-JELDWEN (1-800-535-3936)

CLIPPED ALUMINUM MULLION
LARGE MISSILE IMPACT RESISTANT
MIAMI-DADE NOTICE OF ACCEPTANCE

REMARKS	DRWN	CHKD	DATE
INIT.ISSUE	KL	FLB	06/02/10
REV./PER.BNC.COMMENTS	KL	FLB	07/08/11
ADD'L COMMENTS	KL	FLB	01/05/11
UPDATE FOR 2010 FBC	CSL	FLB	04/11/12

10-JWN-0022
SCALE: - 03
PAGE DESCRIPTION:

2

\\SERVER01\FileCabinet\01 Project Files\Jeld-Wen (JWN)\2010\10-JWN-0022 Clipped Aluminum Mullion (NOA)\10-JWN-0022_03c Clipped Aluminum Mullion (NOA).dwg

04/12/2012 - 1:55pm

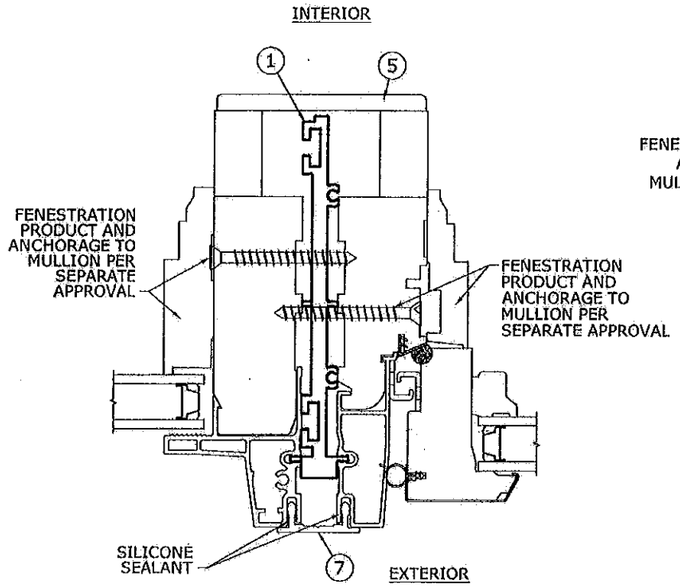

1/3 TYPICAL SINGLE MULLION
6" = 1'-0" HORIZ SECTION

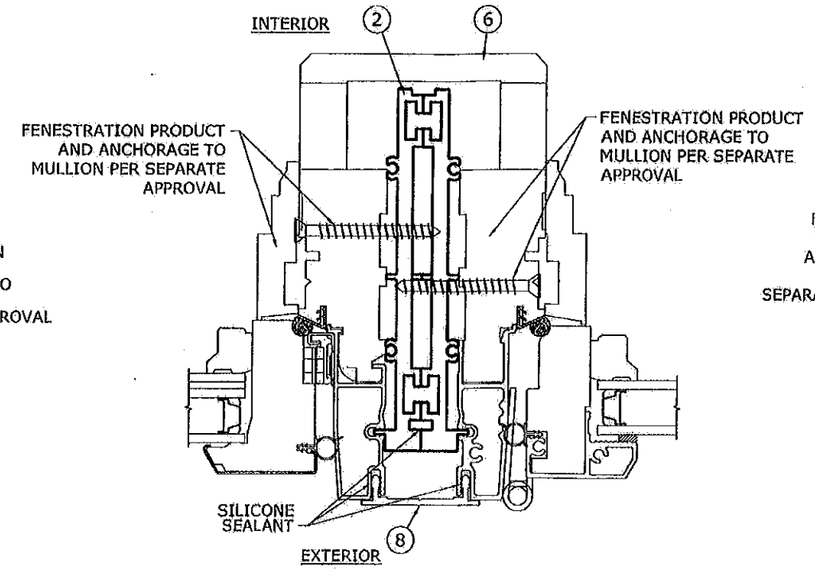

2/3 TYPICAL DOUBLE MULLION
6" = 1'-0" HORIZ SECTION

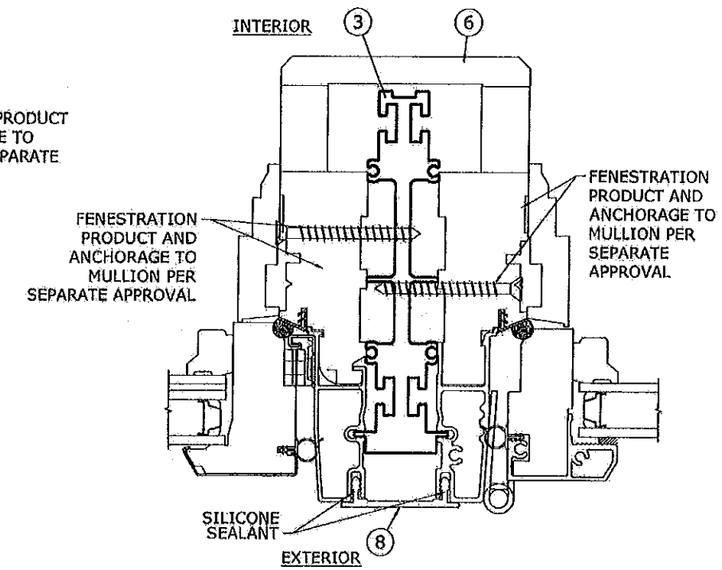

3/3 TYPICAL 1" MULLION
6" = 1'-0" HORIZ SECTION

PRODUCT REVISED
as complying with the Florida Building Code
Assignment No. 10-1115.03
Expiration Date 8/19/14
By Johns / Chaudhr
Product Control

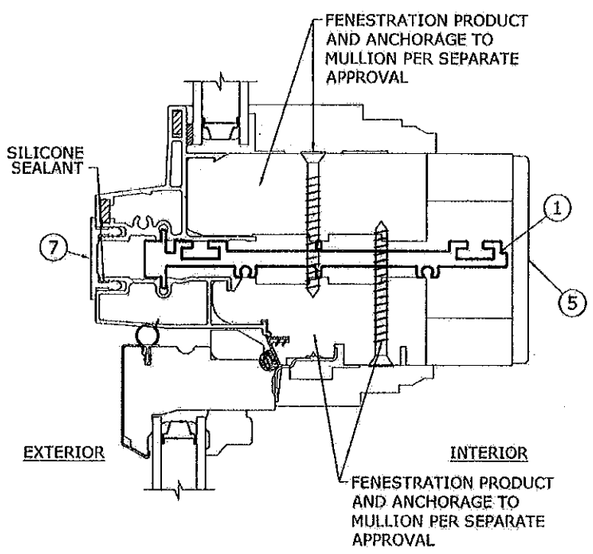

4/3 TYPICAL SINGLE MULLION
6" = 1'-0" VERT SECTION

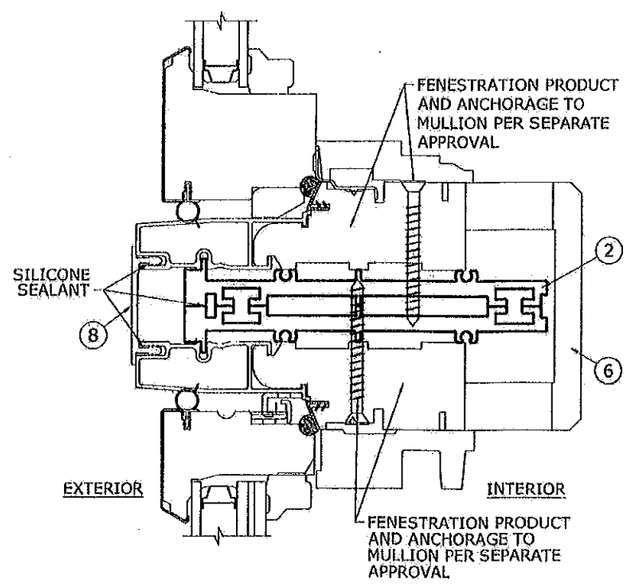

5/3 TYPICAL DOUBLE MULLION
6" = 1'-0" VERT SECTION

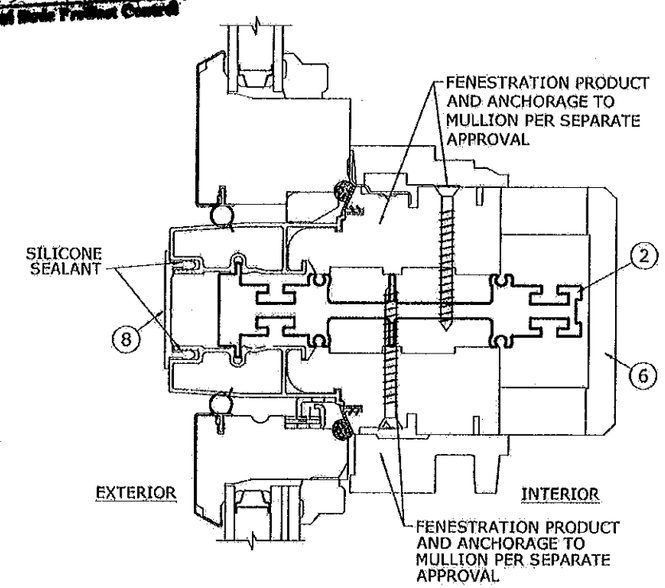

6/3 TYPICAL 1" MULLION
6" = 1'-0" VERT SECTION

FRANK L. BENNARDO, P.E.
PE0046549
LICENSE
04/12/2012
No. 46549
STATE OF FLORIDA
PROFESSIONAL ENGINEER
ENGINEERING EXPRESS
160 SW 12th AVENUE, #306
DEERFIELD BEACH, FL 33442
Ph: (954) 354-0660 Fax: (954) 354-0443
WWW.ENGEXP.COM
CERT OF AUTH #8685
A. FRANK L. BENNARDO, P.E., INC. INCORPORATION

JELD-WEN
3737 LAKEPORT BOULEVARD
KLAMATH FALLS, OREGON 97624
PHONE: 1-800-535-3936 (1-800-JELDWEN)

CLIPPED ALUMINUM MULLION
LARGE MISSILE IMPACT RESISTANT
MIAMI-DADE NOTICE OF ACCEPTANCE

REMARKS	DRWN	CHKD	DATE
INIT ISSUE	KL	FLB	08/02/10
REV. PER SNC COMMENTS	KL	FLB	07/09/11
ADDT'L COMMENTS	KL	FLB	01/09/11
UPDATE FOR 2010 FBC	CSL	FLB	04/11/12

10-JWN-0022
SCALE: - 03
PAGE DESCRIPTION:
-
-

8

3

\\SERVER01\FileCabinet\01 Project Files\Jeld-Wen (JWN)\2010\10-JWN-0022 Clipped Aluminum Mullion (NOA)\10-JWN-0022_08c Clipped Aluminum Mullion (NOA).dwg
04/12/2012 - 1:35pm

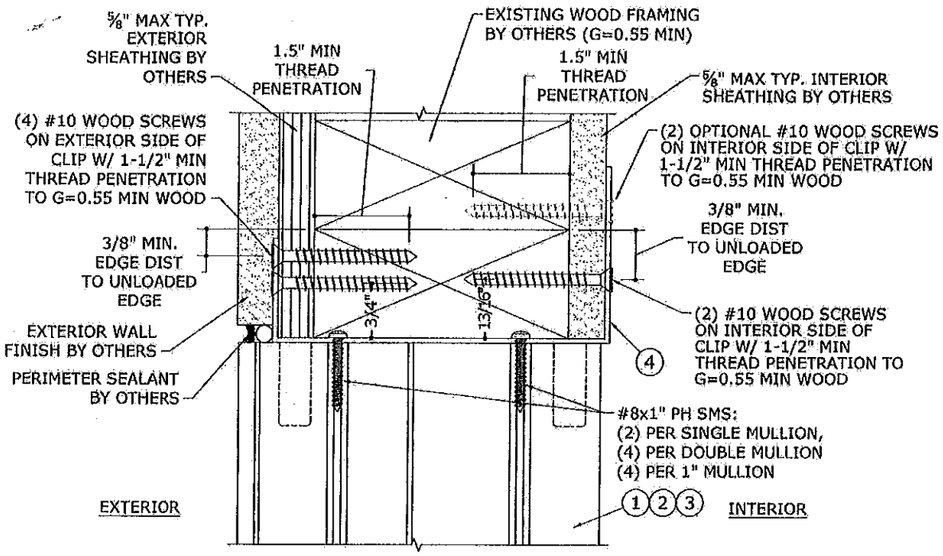

NOTE: MOUNTING CONDITION SHOWN HEREIN MAY BE USED AT TOP, BOTTOM, OR SIDES OF OPENING. TOP SHOWN HERE.

1/4 TYPICAL ATTACHMENT TO WOOD FRAMING

6" = 1'-0" VERT SECTION

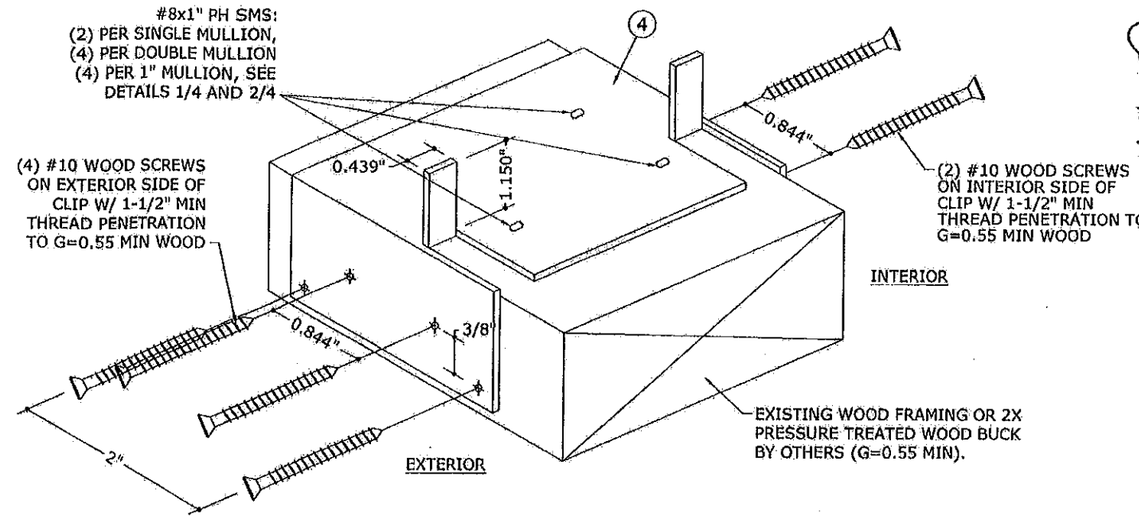

3/4 TYPICAL ANCHOR CLIP

N.T.S. ISOMETRIC

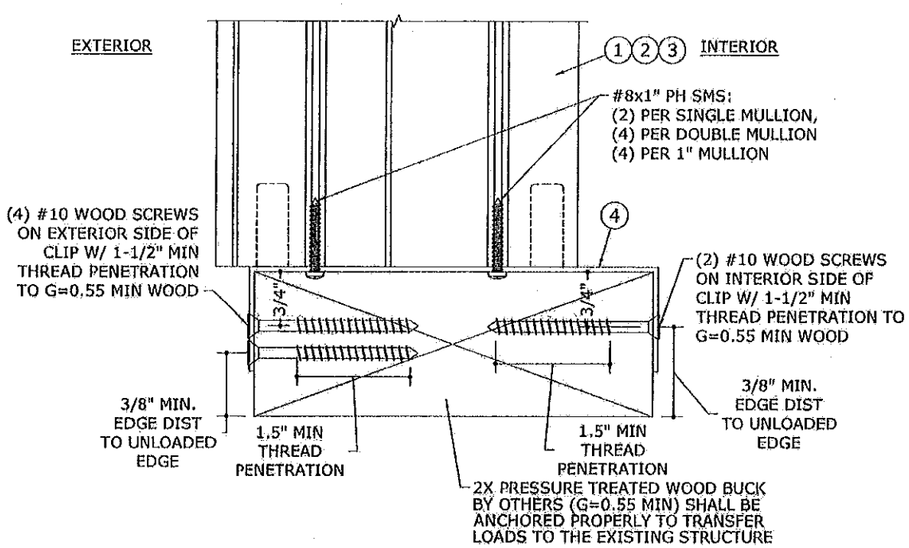

NOTE: MOUNTING CONDITION SHOWN HEREIN MAY BE USED AT TOP, BOTTOM, OR SIDES OF OPENING. BOTTOM SHOWN HERE.

2/4 TYPICAL ATTACHMENT TO WOOD BUCK

6" = 1'-0" VERT SECTION

PRODUCT REVISED
as complying with the Florida Building Code
Acceptance No. 10-1115.03
Inspection Date 8/19/12
By Greg Chanak
Product Data Control

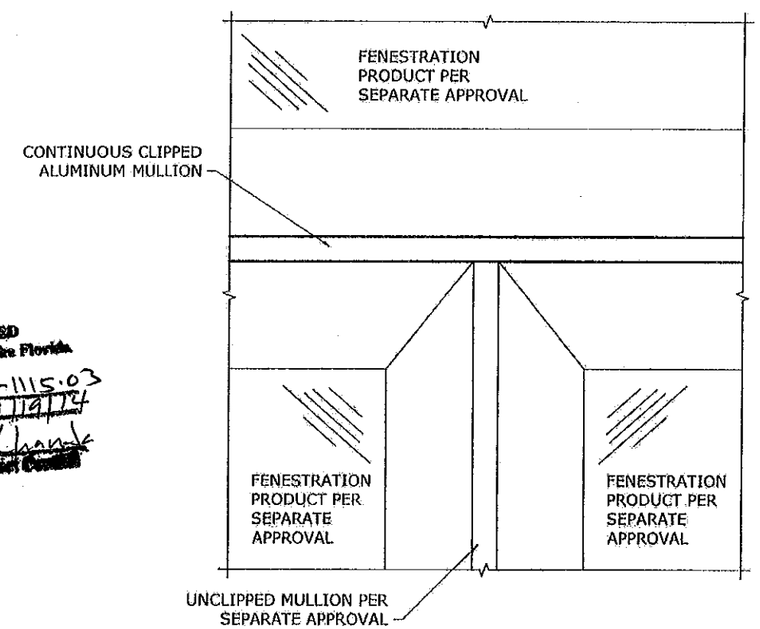

4/4 TYPICAL MULLION INTERSECTION

N.T.S. EXTERIOR ELEV

FRANK L. BENNARDO, P.E.
46549
LICENSED
04/12/2012
STATE OF FLORIDA
ENGINEERING EXPRESS, INC.
160 SW 12th AVENUE
DEERFIELD BEACH, FL 33442
Ph: (954) 354-0660 Fax: (954) 354-0661
WWW.ENGEXP.COM
CERT OF AUTH #3885
A FRANK L. BENNARDO, P.E., INC. INNOVATION

JELDWEN
3737 LAKEPORT BOULEVARD
KLAMATH FALLS, OREGON 97624
PHONE: 1-800-JELDWEN (1-800-535-3936)

CLIPPED ALUMINUM MULLION
LARGE MISSILE IMPACT RESISTANT
MIAMI-DADE NOTICE OF ACCEPTANCE

REMARKS	DRWN	CHKD	DATE
INIT ISSUE	KL	FLB	08/02/10
REV. PER BNC COMMENTS	KL	FLB	07/08/11
ADDL COMMENTS	KL	FLB	01/05/11
UPDATE FOR 2010 FBC	CSL	FLB	04/11/12

10-JWN-0022
SCALE: - 03
PAGE DESCRIPTION:

8

4

\\SERVER01\FileCabinet\01 Project Files\Jeld-Wen (JWN)\2010\10-JWN-0022 Clipped Aluminum Mullion (NOA)\10-JWN-0022_03c Clipped Aluminum Mullion (NOA).dwg
04/12/2012 - 1:55pm

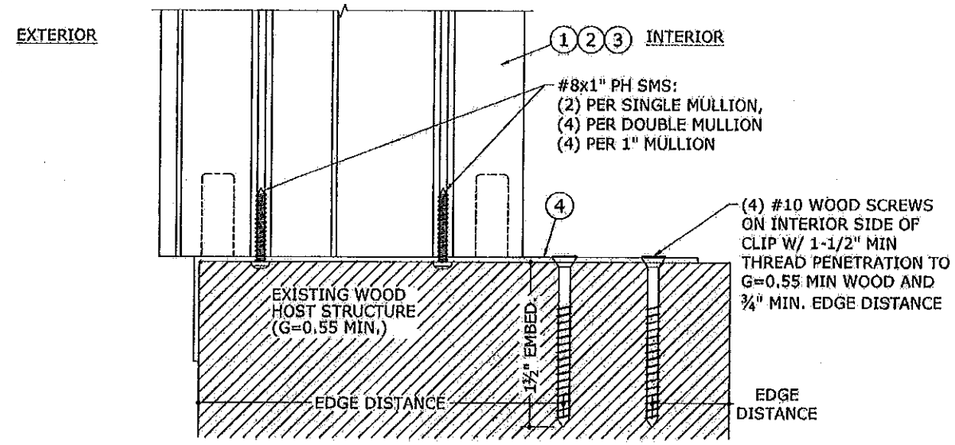

1/5 ALTERNATE CLIP ATTACHMENT WOOD HOST STRUCTURE

6" = 1'-0" VERT SECTION

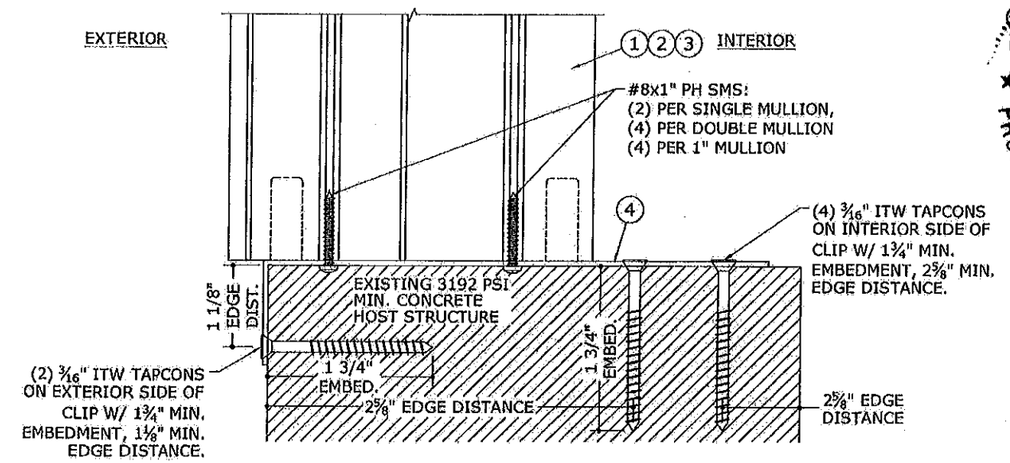

3/5 ALTERNATE CLIP ATTACHMENT CONCRETE HOST STRUCTURE

6" = 1'-0" VERT SECTION

NOTE: SEE SHEET 8 FOR ALLOWABLE MULLION SPANS WITH ALTERNATE CLIP ATTACHMENT

PRODUCT REVISED
to complying with the Florida Building Code
Application No. 10-1115.03
Expiration Date 8/19/14
By Richard L. Chandler
Miami-Dade Product Control

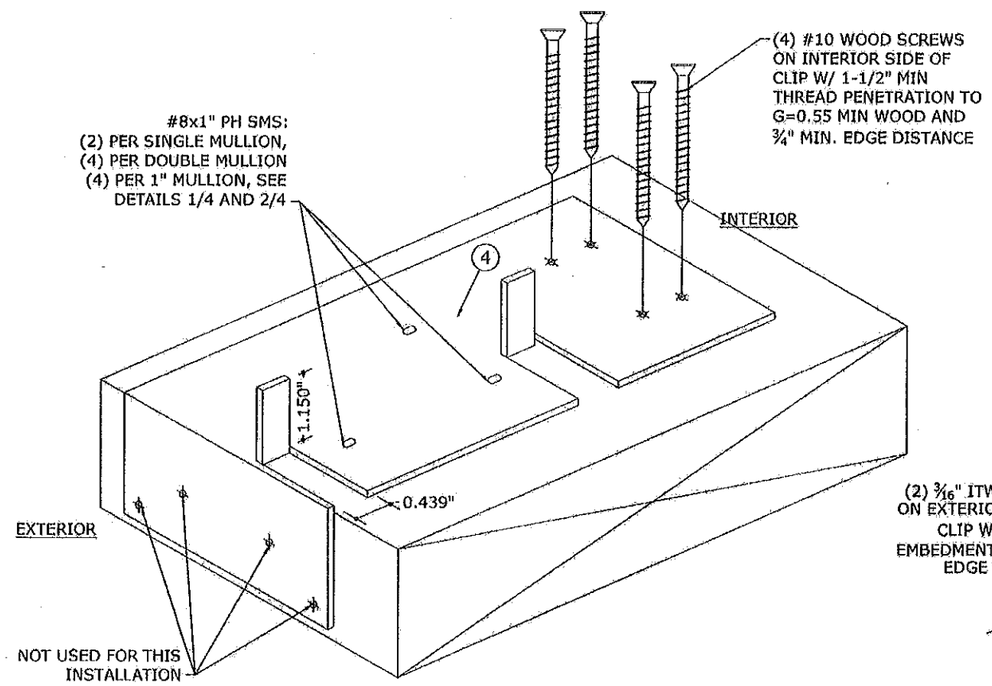

2/5 ALTERNATE CLIP ATTACHMENT WOOD HOST STRUCTURE

N.T.S. ISOMETRIC

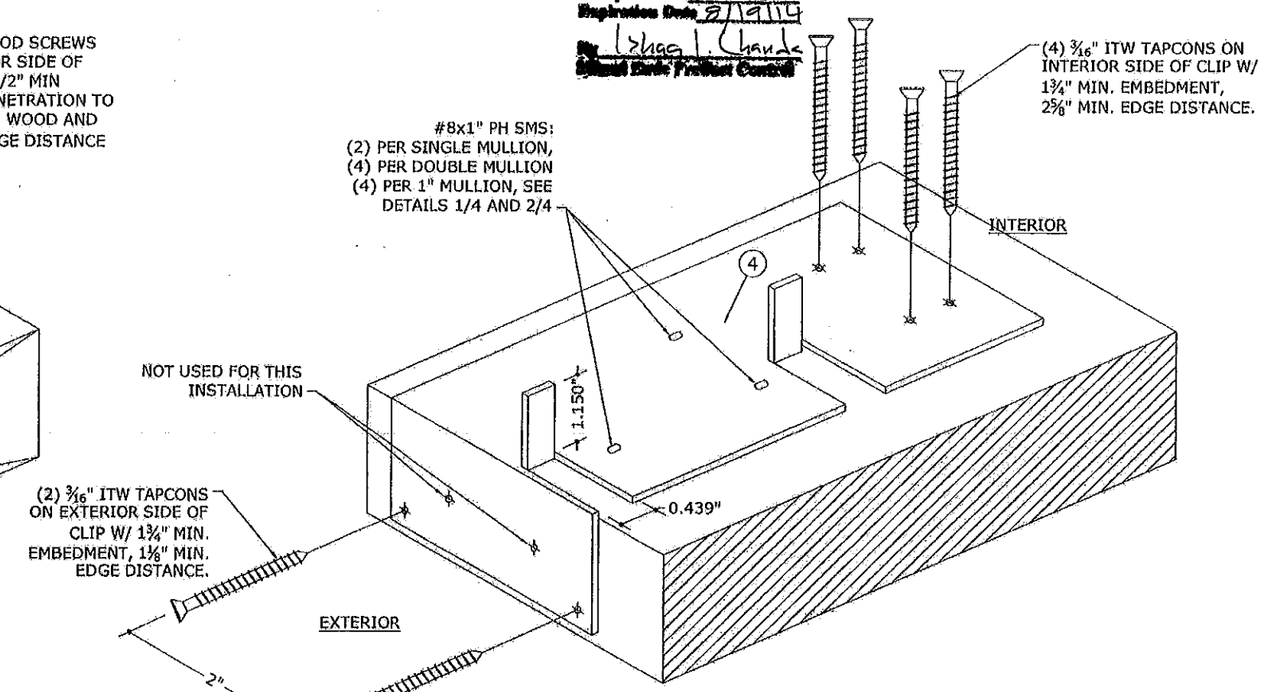

4/5 ALTERNATE CLIP ATTACHMENT 3192 PSI CONCRETE HOST STRUCTURE

N.T.S. ISOMETRIC

FRANK L. BENNARDO, P.E.
LICENSE NO. 46549
STATE OF FLORIDA
PROFESSIONAL ENGINEER
04/12/2012
ENGINEERING & OPTIMIZATION EXPRESS
160 SW 12th AVENUE, #106
DEERFIELD BEACH, FL 33442
Ph: (954) 354-0660 Fax: (954) 354-0443
WWW.ENGEXP.COM
CERT OF AUTH #8985
A FRANK L. BENNARDO, P.E., INC. INNOVATIONS

JELD-WEN
3737 LAKEPORT BOULEVARD
KLAMATH FALLS, OREGON 97624
PHONE: 1-800-JELDWEN (1-800-535-3936)

CLIPPED ALUMINUM MULLION
LARGE MISSILE IMPACT RESISTANT
MIAMI-DADE NOTICE OF ACCEPTANCE

REMARKS	DRWN	CHKD	DATE
INIT ISSUE	KL	FLB	08/02/10
REV. PER BNC COMMENTS	KL	FLB	07/08/11
ADDT. COMMENTS	KL	FLB	01/05/11
UPDATE FOR 2010 FBC	CSL	FLB	04/11/12

10-JWN-0022

SCALE: - 03

PAGE DESCRIPTION:

8

5

\\SERVER01\FileCabinet\01 Project Files\Jeld-Wen (JWN)\2010\10-JWN-0022 Clipped Aluminum Mullion (NOA)\10-JWN-0022_03c Clipped Aluminum Mullion (NOA).dwg

04/12/2012 - 1:55pm

DESIGN SCHEDULE: SINGLE MULLION

MULLION SPAN	TRIBUTARY WIDTH 24"	30"	36"	42"	48"	54"	60"	66"
72"	+ 65.0 / - 75.0	+ 65.0 / - 75.0	+ 65.0 / - 75.0	+ 65.0 / - 75.0	+ 65.0 / - 66.5			
66"	+ 65.0 / - 75.0	+ 65.0 / - 75.0	+ 65.0 / - 75.0	+ 65.0 / - 75.0	+ 65.0 / - 72.5			
60"	+ 65.0 / - 75.0	+ 65.0 / - 75.0	+ 65.0 / - 75.0	+ 65.0 / - 75.0	+ 65.0 / - 75.0			
54"	+ 65.0 / - 75.0	+ 65.0 / - 75.0	+ 65.0 / - 75.0	+ 65.0 / - 75.0	+ 65.0 / - 75.0			
48"	+ 65.0 / - 75.0	+ 65.0 / - 75.0	+ 65.0 / - 75.0	+ 65.0 / - 75.0	+ 65.0 / - 75.0	+ 65.0 / - 75.0	+ 65.0 / - 75.0	+ 65.0 / - 72.5
42"	+ 65.0 / - 75.0	+ 65.0 / - 75.0	+ 65.0 / - 75.0	+ 65.0 / - 75.0	+ 65.0 / - 75.0	+ 65.0 / - 75.0	+ 65.0 / - 75.0	+ 65.0 / - 75.0
36"	+ 65.0 / - 75.0	+ 65.0 / - 75.0	+ 65.0 / - 75.0	+ 65.0 / - 75.0	+ 65.0 / - 75.0	+ 65.0 / - 75.0	+ 65.0 / - 75.0	+ 65.0 / - 75.0

DESIGN SCHEDULE: DOUBLE MULLION

MULLION SPAN	TRIBUTARY WIDTH 24"	30"	36"	42"	48"	54"	60"	66"
96"	+ 65.0 / - 75.0	+ 65.0 / - 75.0	+ 65.0 / - 66.5	+ 57.0 / - 57.0	+ 49.9 / - 49.9	+ 44.3 / - 44.3	+ 39.9 / - 39.9	+ 36.3 / - 36.3
90"	+ 65.0 / - 75.0	+ 65.0 / - 75.0	+ 65.0 / - 70.9	+ 60.8 / - 60.8	+ 53.2 / - 53.2	+ 47.3 / - 47.3	+ 42.6 / - 42.6	+ 38.7 / - 38.7
84"	+ 65.0 / - 75.0	+ 65.0 / - 75.0	+ 65.0 / - 75.0	+ 65.0 / - 65.1	+ 57.0 / - 57.0	+ 50.7 / - 50.7	+ 45.6 / - 45.6	+ 41.5 / - 41.5
78"	+ 65.0 / - 75.0	+ 65.0 / - 75.0	+ 65.0 / - 75.0	+ 65.0 / - 70.2	+ 61.4 / - 61.4	+ 54.6 / - 54.6	+ 49.1 / - 49.1	+ 44.6 / - 44.6
72"	+ 65.0 / - 75.0	+ 65.0 / - 75.0	+ 65.0 / - 75.0	+ 65.0 / - 75.0	+ 65.0 / - 66.5	+ 59.1 / - 59.1	+ 53.2 / - 53.2	+ 48.4 / - 48.4
66"	+ 65.0 / - 75.0	+ 65.0 / - 75.0	+ 65.0 / - 75.0	+ 65.0 / - 75.0	+ 65.0 / - 72.5	+ 64.5 / - 64.5	+ 58.0 / - 58.0	+ 52.8 / - 52.8
60"	+ 65.0 / - 75.0	+ 65.0 / - 75.0	+ 65.0 / - 75.0	+ 65.0 / - 75.0	+ 65.0 / - 75.0	+ 65.0 / - 70.9	+ 63.8 / - 63.8	+ 58.0 / - 58.0
54"	+ 65.0 / - 75.0	+ 65.0 / - 75.0	+ 65.0 / - 75.0	+ 65.0 / - 75.0	+ 65.0 / - 75.0	+ 65.0 / - 75.0	+ 65.0 / - 70.9	+ 64.5 / - 64.5
48"	+ 65.0 / - 75.0	+ 65.0 / - 75.0	+ 65.0 / - 75.0	+ 65.0 / - 75.0	+ 65.0 / - 75.0	+ 65.0 / - 75.0	+ 65.0 / - 75.0	+ 65.0 / - 72.5
42"	+ 65.0 / - 75.0	+ 65.0 / - 75.0	+ 65.0 / - 75.0	+ 65.0 / - 75.0	+ 65.0 / - 75.0	+ 65.0 / - 75.0	+ 65.0 / - 75.0	+ 65.0 / - 75.0
36"	+ 65.0 / - 75.0	+ 65.0 / - 75.0	+ 65.0 / - 75.0	+ 65.0 / - 75.0	+ 65.0 / - 75.0	+ 65.0 / - 75.0	+ 65.0 / - 75.0	+ 65.0 / - 75.0
24"	+ 65.0 / - 75.0	+ 65.0 / - 75.0	+ 65.0 / - 75.0	+ 65.0 / - 75.0	+ 65.0 / - 75.0	+ 65.0 / - 75.0	+ 65.0 / - 75.0	+ 65.0 / - 75.0

DESIGN SCHEDULE NOTES:

1. DESIGN SCHEDULES PROVIDE MAXIMUM ALLOWABLE POSITIVE (+) AND NEGATIVE (-) DESIGN PRESSURES FOR USE WITH MULLION SYSTEM IN POUNDS PER SQUARE FOOT (PSF).
2. FOR DETERMINATION OF MULLION SPANS AND TRIBUTARY WIDTHS, SEE ELEVATIONS ON SHEET 1.
3. DESIGN SCHEDULES SHOWN ON THIS SHEET MUST NOT BE USED WITH ALTERNATE CLIP ATTACHMENT AS SHOWN ON SHEET 5, TYPICAL INSTALLATIONS FOR USE WITH THESE SCHEDULES PER SHEET 4.
4. ▨ DENOTES CONDITIONS NOT ACCEPTABLE FOR USE.

DESIGN SCHEDULE: DOUBLE MULLION

(DOUBLE BRACED CONDITION ONLY, 36" MAX TRIBUTARY WIDTH 72" MAX FREE SPAN. SEE CONFIGURATIONS NOTED AS DOUBLE BRACED CONDITIONS IN DETAIL 1/6)

MULLION SPAN (O.A.)	TRIBUTARY WIDTH 24"	30"	36"
144"	+ 48.1 / - 48.1	+ 38.5 / - 38.5	+ 32.1 / - 32.1
132"	+ 62.5 / - 62.5	+ 50.0 / - 50.0	+ 41.7 / - 41.7
120"	+ 65.0 / - 75.0	+ 63.8 / - 63.8	+ 53.2 / - 53.2
108"	+ 65.0 / - 75.0	+ 65.0 / - 70.9	+ 59.1 / - 59.1

PRODUCT REVISED
In complying with the Florida Building Code
Application No. 10-1115.03
Registration Date 08/19/14
By Shaq L. Chayk
Miami-Dade Product Control

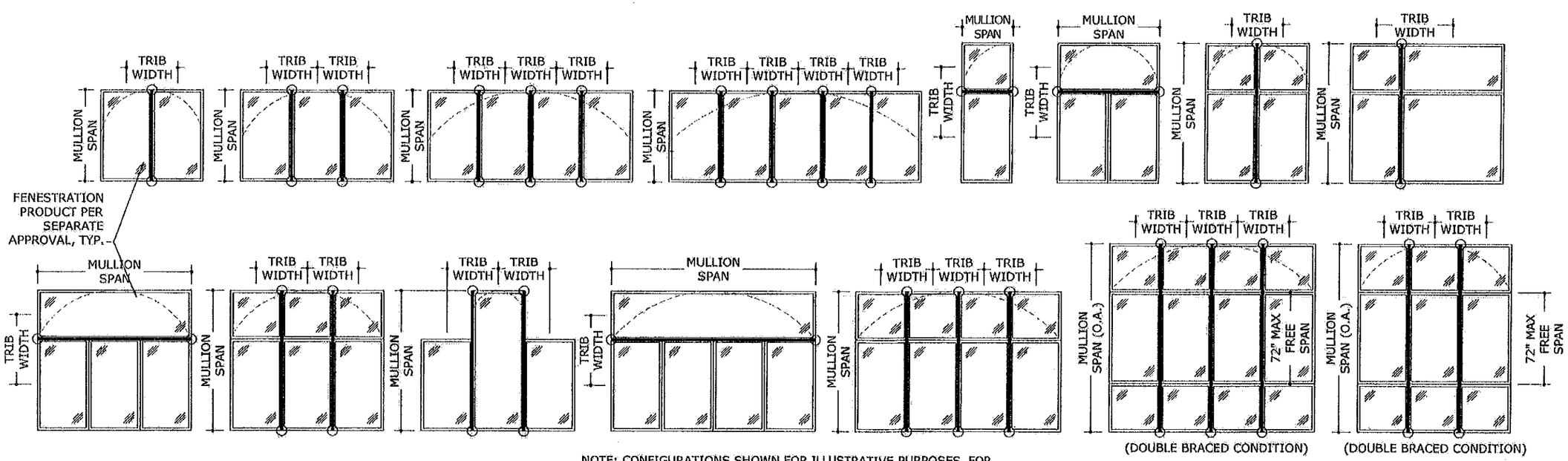

NOTE: CONFIGURATIONS SHOWN FOR ILLUSTRATIVE PURPOSES. FOR ALLOWABLE SIZES AND SHAPES, SEE SEPARATE APPROVAL FOR INDIVIDUAL PRODUCT. THE LOWER DESIGN PRESSURE OF EITHER THE FENESTRATION PRODUCT (PER SEPARATE APPROVAL) OR THE MULLION SHALL GOVERN FOR THE ENTIRE ASSEMBLY.

1/6 ADDITIONAL ALLOWABLE SINGLE OR DOUBLE MULLION CONFIGURATIONS

N.T.S. EXTERIOR ELEV

LEGEND
○ DENOTES CLIP
▬ DENOTES MULLION

FRANK L. BENNARDO, P.E.
LICENSE No. 46549
04/12/2012
STATE OF FLORIDA
PROFESSIONAL ENGINEER
ENGINEERING EXPRESS, INC.
160 SW 12th AVENUE
DEERFIELD BEACH, FL 33442
PH: (954) 354-0560 FAX: (954) 354-0563
WWW.ENGEXP.COM
CERT OF AUTH #8885
A. FRANK L. BENNARDO, P.E., INC. INNOVATION

JELDWEN
3737 LAKEPORT BOULEVARD
KLAMATH FALLS, OREGON 97624
PHONE: 1-800-JELDWEN (1-800-535-3936)

CLIPPED ALUMINUM MULLION
LARGE MISSILE IMPACT RESISTANT
MIAMI-DADE NOTICE OF ACCEPTANCE

REMARKS	DRWN	CHKD	DATE
INIT ISSUE	KL	FLB	08/02/10
REV. PER BNC COMMENTS	KL	FLB	07/08/11
ADD'L COMMENTS	KL	FLB	01/05/11
UPDATE FOR 2010 FBC	CSL	FLB	04/11/12

10-JWN-0022
SCALE: - 03
PAGE DESCRIPTION:

\\SERVER01\FileCabinet01 Project Files\Jeld-Wen (JWN)\2010\10-JWN-0022_03c Clipped Aluminum Mullion (NOA).dwg
04/12/2012 - 1:55pm

DESIGN SCHEDULE: 1" MULLION

MULLION SPAN	TRIBUTARY WIDTH 24"	30"	36"	42"	48"	54"
96"	+ 60.0 / - 80.0	+ 60.0 / - 79.8	+ 60.0 / - 66.6	+ 30.0 / - 30.0	+ 30.0 / - 30.0	+ 30.0 / - 30.0
90"	+ 60.0 / - 80.0	+ 60.0 / - 80.0	+ 60.0 / - 70.9	+ 30.0 / - 30.0	+ 30.0 / - 30.0	+ 30.0 / - 30.0
84"	+ 60.0 / - 80.0	+ 60.0 / - 80.0	+ 60.0 / - 76.0	+ 30.0 / - 30.0	+ 30.0 / - 30.0	+ 30.0 / - 30.0
78"	+ 60.0 / - 80.0	+ 60.0 / - 80.0	+ 60.0 / - 80.0	+ 30.0 / - 30.0	+ 30.0 / - 30.0	+ 30.0 / - 30.0
72"	+ 60.0 / - 80.0	+ 60.0 / - 80.0	+ 60.0 / - 80.0	+ 30.0 / - 30.0	+ 30.0 / - 30.0	+ 30.0 / - 30.0
66"	+ 60.0 / - 80.0	+ 60.0 / - 80.0	+ 60.0 / - 80.0	+ 60.0 / - 80.0	+ 60.0 / - 72.5	+ 60.0 / - 64.5
60"	+ 60.0 / - 80.0	+ 60.0 / - 80.0	+ 60.0 / - 80.0	+ 60.0 / - 80.0	+ 60.0 / - 79.8	+ 60.0 / - 70.9
54"	+ 60.0 / - 80.0	+ 60.0 / - 80.0	+ 60.0 / - 80.0	+ 60.0 / - 80.0	+ 60.0 / - 80.0	+ 60.0 / - 78.8
48"	+ 60.0 / - 80.0	+ 60.0 / - 80.0	+ 60.0 / - 80.0	+ 60.0 / - 80.0	+ 60.0 / - 80.0	+ 60.0 / - 80.0
42"	+ 60.0 / - 80.0	+ 60.0 / - 80.0	+ 60.0 / - 80.0	+ 60.0 / - 80.0	+ 60.0 / - 80.0	+ 60.0 / - 80.0
36"	+ 60.0 / - 80.0	+ 60.0 / - 80.0	+ 60.0 / - 80.0	+ 60.0 / - 80.0	+ 60.0 / - 80.0	+ 60.0 / - 80.0
24"	+ 60.0 / - 80.0	+ 60.0 / - 80.0	+ 60.0 / - 80.0	+ 60.0 / - 80.0	+ 60.0 / - 80.0	+ 60.0 / - 80.0

DESIGN SCHEDULE: 1" MULLION

(DOUBLE BRACED CONDITION ONLY, 64" MAX TRIBUTARY WIDTH 75" MAX FREE SPAN.
SEE CONFIGURATIONS NOTED AS DOUBLE BRACED CONDITIONS IN DETAIL 1/7)

MULLION SPAN (O.A.)	TRIBUTARY WIDTH 24"	30"	36"	42"	48"	54"	60"	64"
153"	+ 30.0 / - 30.0	+ 30.0 / - 30.0	+ 28.2 / - 28.2	+ 24.2 / - 24.2	+ 21.1 / - 21.1	+ 18.8 / - 18.8	+ 16.9 / - 16.9	+ 15.9 / - 15.9
144"	+ 30.0 / - 30.0	+ 30.0 / - 30.0	+ 30.0 / - 30.0	+ 29.0 / - 29.0	+ 25.4 / - 25.4	+ 22.5 / - 22.5	+ 20.3 / - 20.3	+ 19.0 / - 19.0
132"	+ 30.0 / - 30.0	+ 30.0 / - 30.0	+ 30.0 / - 30.0	+ 30.0 / - 30.0	+ 30.0 / - 30.0	+ 29.3 / - 29.3	+ 26.3 / - 26.3	+ 24.7 / - 24.7
120"	+ 30.0 / - 30.0	+ 30.0 / - 30.0	+ 30.0 / - 30.0	+ 30.0 / - 30.0	+ 30.0 / - 30.0	+ 30.0 / - 30.0	+ 30.0 / - 30.0	+ 29.9 / - 29.9
108"	+ 30.0 / - 30.0	+ 30.0 / - 30.0	+ 30.0 / - 30.0	+ 30.0 / - 30.0	+ 30.0 / - 30.0	+ 30.0 / - 30.0	+ 30.0 / - 30.0	+ 30.0 / - 30.0

DESIGN SCHEDULE NOTES:

1. DESIGN SCHEDULES PROVIDE MAXIMUM ALLOWABLE POSITIVE (+) AND NEGATIVE (-) DESIGN PRESSURES FOR USE WITH MULLION SYSTEM IN POUNDS PER SQUARE FOOT (PSF).
2. FOR DETERMINATION OF MULLION SPANS AND TRIBUTARY WIDTHS, SEE ELEVATIONS ON SHEET 1.
3. DESIGN SCHEDULES SHOWN ON THIS SHEET MUST NOT BE USED WITH ALTERNATE CLIP ATTACHMENT AS SHOWN ON SHEET 5, SEE TYPICAL INSTALLATIONS PER SHEET 4 FOR USE WITH THESE SCHEDULES.

PRODUCT REVISED
to complying with the Florida
Building Code
Application No. 10-1115.03
Expiration Date 03/19/14
Chief State Product Control

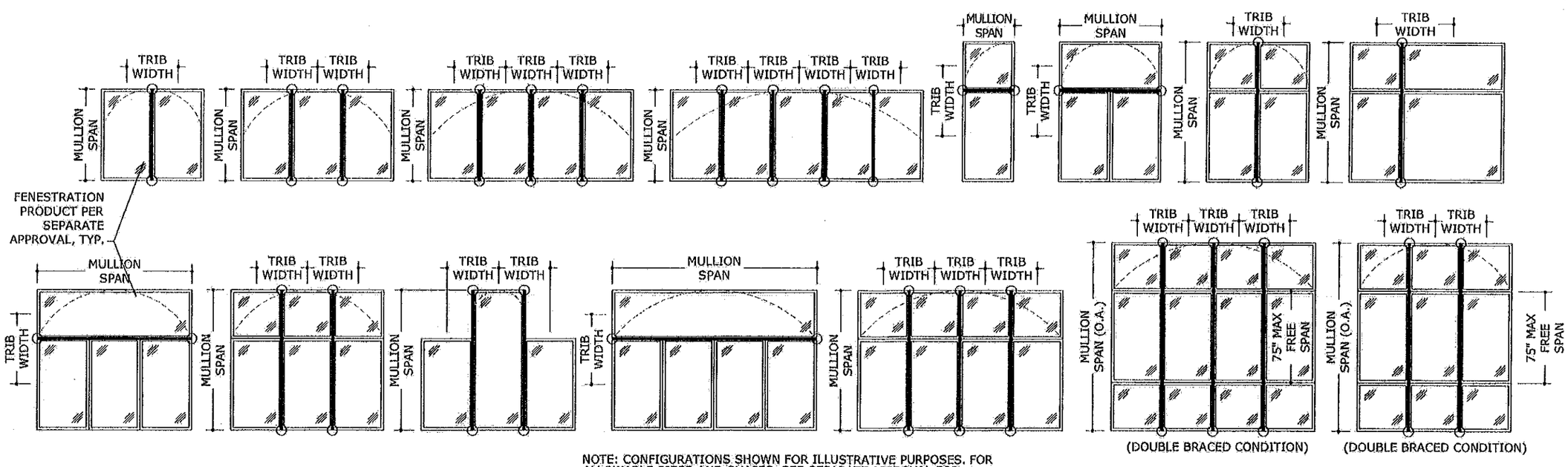

NOTE: CONFIGURATIONS SHOWN FOR ILLUSTRATIVE PURPOSES. FOR ALLOWABLE SIZES AND SHAPES, SEE SEPARATE APPROVAL FOR INDIVIDUAL PRODUCT. THE LOWER DESIGN PRESSURE OF EITHER THE FENESTRATION PRODUCT (PER SEPARATE APPROVAL) OR THE MULLION SHALL GOVERN FOR THE ENTIRE ASSEMBLY.

1/7 ADDITIONAL ALLOWABLE 1" MULLION CONFIGURATIONS

N.T.S. EXTERIOR ELEV

LEGEND
○ DENOTES CLIP
▬ DENOTES MULLION

FRANK L. BENNARDO, P.E.
46549
STATE OF FLORIDA
LICENSED
04/12/2012
No. 46549
PROFESSIONAL ENGINEER

ENGINEERING EXPRESS, INC.
160 SW 12th AVENUE
DEERFIELD BEACH, FL 33442
Ph: (954) 354-0660 Fax: (954) 354-0443
WWW.ENGEXP.COM
CERT OF AUTH #8985
A. FRANK L. BENNARDO, P.E., INC. INNOVATION

JELDWEN
3737 LAKEPORT BOULEVARD
KLAMATH FALLS, OREGON 97624
PHONE: 1-800-JELDWEN (1-800-535-3936)

CLIPPED ALUMINUM MULLION
LARGE MISSILE IMPACT RESISTANT
MIAMI-DADE NOTICE OF ACCEPTANCE

REMARKS	DRWN	CHKD	DATE
INIT ISSUE	KL	FLB	06/02/10
REV. PER BNC COMMENTS	KL	FLB	07/08/11
ADDT. COMMENTS	KL	FLB	01/05/11
UPDATE FOR 2010 FBC	CSL	FLB	04/11/12

10-JWN-0022
SCALE: - 03
PAGE DESCRIPTION:

\\SERVER01\FileCabinet\01 Project Files\Jeld-Wen (JWN)\2010\10-JWN-0022_03c Clipped Aluminum Mullion (NOA)\10-JWN-0022_03c Clipped Aluminum Mullion (NOA).dwg
04/12/2012 - 1:55pm

DESIGN SCHEDULE: SINGLE MULLION

FOR USE WITH ALTERNATE CLIP ATTACHMENT (SEE SHEET 5)

MULLION SPAN	TRIBUTARY WIDTH 24"	30"	36"	42"	48"	54"	60"	66"
72"	+ 65.0 / - 75.0	+ 65.0 / - 68.4	+ 57.0 / - 57.0	+ 48.9 / - 48.9	+ 42.8 / - 42.8			
66"	+ 65.0 / - 75.0	+ 65.0 / - 74.6	+ 62.2 / - 62.2	+ 53.3 / - 53.3	+ 46.6 / - 46.6			
60"	+ 65.0 / - 75.0	+ 65.0 / - 75.0	+ 65.0 / - 68.4	+ 58.6 / - 58.6	+ 51.3 / - 51.3			
54"	+ 65.0 / - 75.0	+ 65.0 / - 75.0	+ 65.0 / - 75.0	+ 65.0 / - 68.1	+ 57.0 / - 57.0			
48"	+ 65.0 / - 75.0	+ 65.0 / - 75.0	+ 65.0 / - 75.0	+ 65.0 / - 73.3	+ 64.1 / - 64.1	+ 57.0 / - 57.0	+ 51.3 / - 51.3	+ 46.6 / - 46.6
42"	+ 65.0 / - 75.0	+ 65.0 / - 75.0	+ 65.0 / - 75.0	+ 65.0 / - 75.0	+ 65.0 / - 73.3	+ 65.0 / - 65.1	+ 58.6 / - 58.6	+ 53.3 / - 53.3
36"	+ 65.0 / - 75.0	+ 65.0 / - 75.0	+ 65.0 / - 75.0	+ 65.0 / - 75.0	+ 65.0 / - 75.0	+ 65.0 / - 75.0	+ 65.0 / - 68.4	+ 62.2 / - 62.2

DESIGN SCHEDULE: DOUBLE MULLION

FOR USE WITH ALTERNATE CLIP ATTACHMENT (SEE SHEET 5)

MULLION SPAN	TRIBUTARY WIDTH 24"	30"	36"	42"	48"	54"	60"	66"
96"	+ 64.1 / - 64.1	+ 51.3 / - 51.3	+ 42.8 / - 42.8	+ 36.6 / - 36.6	+ 32.1 / - 32.1	+ 28.5 / - 28.5	+ 25.7 / - 25.7	+ 23.3 / - 23.3
90"	+ 65.0 / - 68.4	+ 54.7 / - 54.7	+ 45.6 / - 45.6	+ 39.1 / - 39.1	+ 34.2 / - 34.2	+ 30.4 / - 30.4	+ 27.4 / - 27.4	+ 24.9 / - 24.9
84"	+ 65.0 / - 73.3	+ 58.6 / - 58.6	+ 48.9 / - 48.9	+ 41.9 / - 41.9	+ 36.6 / - 36.6	+ 32.6 / - 32.6	+ 29.3 / - 29.3	+ 26.6 / - 26.6
78"	+ 65.0 / - 75.0	+ 63.1 / - 63.1	+ 52.6 / - 52.6	+ 45.1 / - 45.1	+ 39.5 / - 39.5	+ 35.1 / - 35.1	+ 31.6 / - 31.6	+ 28.7 / - 28.7
72"	+ 65.0 / - 75.0	+ 65.0 / - 68.4	+ 57.0 / - 57.0	+ 48.9 / - 48.9	+ 42.8 / - 42.8	+ 38.0 / - 38.0	+ 34.2 / - 34.2	+ 31.1 / - 31.1
66"	+ 65.0 / - 75.0	+ 65.0 / - 74.6	+ 62.2 / - 62.2	+ 53.3 / - 53.3	+ 46.6 / - 46.6	+ 41.5 / - 41.5	+ 37.3 / - 37.3	+ 33.9 / - 33.9
60"	+ 65.0 / - 75.0	+ 65.0 / - 75.0	+ 65.0 / - 68.4	+ 58.6 / - 58.6	+ 51.3 / - 51.3	+ 45.6 / - 45.6	+ 41.0 / - 41.0	+ 37.3 / - 37.3
54"	+ 65.0 / - 75.0	+ 65.0 / - 75.0	+ 65.0 / - 75.0	+ 65.0 / - 65.1	+ 57.0 / - 57.0	+ 50.7 / - 50.7	+ 45.6 / - 45.6	+ 41.5 / - 41.5
48"	+ 65.0 / - 75.0	+ 65.0 / - 75.0	+ 65.0 / - 75.0	+ 65.0 / - 73.3	+ 64.1 / - 64.1	+ 57.0 / - 57.0	+ 51.3 / - 51.3	+ 46.6 / - 46.6
42"	+ 65.0 / - 75.0	+ 65.0 / - 75.0	+ 65.0 / - 75.0	+ 65.0 / - 75.0	+ 65.0 / - 73.3	+ 65.0 / - 65.1	+ 58.6 / - 58.6	+ 53.3 / - 53.3
36"	+ 65.0 / - 75.0	+ 65.0 / - 75.0	+ 65.0 / - 75.0	+ 65.0 / - 75.0	+ 65.0 / - 75.0	+ 65.0 / - 75.0	+ 65.0 / - 68.4	+ 62.2 / - 62.2
24"	+ 65.0 / - 75.0	+ 65.0 / - 75.0	+ 65.0 / - 75.0	+ 65.0 / - 75.0	+ 65.0 / - 75.0	+ 65.0 / - 75.0	+ 65.0 / - 75.0	+ 65.0 / - 75.0

DESIGN SCHEDULE: 1" MULLION

FOR USE WITH ALTERNATE CLIP ATTACHMENT (SEE SHEET 5)

MULLION SPAN	TRIBUTARY WIDTH 24"	30"	36"	42"	48"	54"
96"	+ 60.0 / - 64.1	+ 51.3 / - 51.3	+ 42.8 / - 42.8	+ 30.0 / - 30.0	+ 30.0 / - 30.0	+ 28.5 / - 28.5
90"	+ 60.0 / - 68.4	+ 54.7 / - 54.7	+ 45.6 / - 45.6	+ 30.0 / - 30.0	+ 30.0 / - 30.0	+ 30.0 / - 30.0
84"	+ 60.0 / - 73.3	+ 58.6 / - 58.6	+ 48.9 / - 48.9	+ 30.0 / - 30.0	+ 30.0 / - 30.0	+ 30.0 / - 30.0
78"	+ 60.0 / - 78.9	+ 60.0 / - 63.1	+ 52.6 / - 52.6	+ 30.0 / - 30.0	+ 30.0 / - 30.0	+ 30.0 / - 30.0
72"	+ 60.0 / - 80.0	+ 60.0 / - 68.4	+ 57.0 / - 57.0	+ 30.0 / - 30.0	+ 30.0 / - 30.0	+ 30.0 / - 30.0
66"	+ 60.0 / - 80.0	+ 60.0 / - 74.6	+ 60.0 / - 62.2	+ 53.3 / - 53.3	+ 46.6 / - 46.6	+ 41.5 / - 41.5
60"	+ 60.0 / - 80.0	+ 60.0 / - 80.0	+ 60.0 / - 68.4	+ 58.6 / - 58.6	+ 51.3 / - 51.3	+ 45.6 / - 45.6
54"	+ 60.0 / - 80.0	+ 60.0 / - 80.0	+ 60.0 / - 76.0	+ 60.0 / - 65.1	+ 57.0 / - 57.0	+ 50.7 / - 50.7
48"	+ 60.0 / - 80.0	+ 60.0 / - 80.0	+ 60.0 / - 80.0	+ 60.0 / - 73.3	+ 60.0 / - 64.1	+ 57.0 / - 57.0
42"	+ 60.0 / - 80.0	+ 60.0 / - 80.0	+ 60.0 / - 80.0	+ 60.0 / - 80.0	+ 60.0 / - 73.3	+ 60.0 / - 65.1
36"	+ 60.0 / - 80.0	+ 60.0 / - 80.0	+ 60.0 / - 80.0	+ 60.0 / - 80.0	+ 60.0 / - 80.0	+ 60.0 / - 76.0
24"	+ 60.0 / - 80.0	+ 60.0 / - 80.0	+ 60.0 / - 80.0	+ 60.0 / - 80.0	+ 60.0 / - 80.0	+ 60.0 / - 80.0

DESIGN SCHEDULE: 1" MULLION

FOR USE WITH ALTERNATE CLIP ATTACHMENT (SEE SHEET 5)
(DOUBLE BRACED CONDITION ONLY, 64" MAX TRIBUTARY WIDTH 75" MAX FREE SPAN.
SEE CONFIGURATIONS NOTED AS DOUBLE BRACED CONDITIONS IN DETAIL 1/7)

MULLION SPAN (O.A.)	TRIBUTARY WIDTH 24"	30"	36"	42"	48"	54"	60"	64"
153"	+ 30.0 / - 30.0	+ 30.0 / - 30.0	+ 26.8 / - 26.8	+ 23.0 / - 23.0	+ 20.1 / - 20.1	+ 17.9 / - 17.9	+ 16.1 / - 16.1	+ 15.1 / - 15.1
144"	+ 30.0 / - 30.0	+ 30.0 / - 30.0	+ 28.5 / - 28.5	+ 24.4 / - 24.4	+ 21.4 / - 21.4	+ 19.0 / - 19.0	+ 17.1 / - 17.1	+ 16.0 / - 16.0
132"	+ 30.0 / - 30.0	+ 30.0 / - 30.0	+ 30.0 / - 30.0	+ 26.6 / - 26.6	+ 23.3 / - 23.3	+ 20.7 / - 20.7	+ 18.7 / - 18.7	+ 17.5 / - 17.5
120"	+ 30.0 / - 30.0	+ 30.0 / - 30.0	+ 30.0 / - 30.0	+ 29.3 / - 29.3	+ 25.7 / - 25.7	+ 22.8 / - 22.8	+ 20.5 / - 20.5	+ 19.2 / - 19.2
108"	+ 30.0 / - 30.0	+ 30.0 / - 30.0	+ 30.0 / - 30.0	+ 30.0 / - 30.0	+ 28.5 / - 28.5	+ 25.3 / - 25.3	+ 22.8 / - 22.8	+ 21.4 / - 21.4

DESIGN SCHEDULE NOTES:

1. DESIGN SCHEDULES PROVIDE MAXIMUM ALLOWABLE POSITIVE (+) AND NEGATIVE (-) DESIGN PRESSURES FOR USE WITH MULLION SYSTEM IN POUNDS PER SQUARE FOOT (PSF).
2. FOR DETERMINATION OF MULLION SPANS AND TRIBUTARY WIDTHS, SEE ELEVATIONS ON SHEET 1.
3. DESIGN SCHEDULES SHOWN ON THIS SHEET MUST BE USED WITH ALTERNATE CLIP ATTACHMENT AS SHOWN ON SHEET 5.
4. FOR ALTERNATE ALLOWABLE CONFIGURATIONS, SEE SHEETS 6 AND 7.
5. ▨ DENOTES CONDITIONS NOT ACCEPTABLE FOR USE.

DESIGN SCHEDULE: DOUBLE MULLION

FOR USE WITH ALTERNATE CLIP ATTACHMENT (SEE SHEET 5)
(DOUBLE BRACED CONDITION ONLY, 36" MAX TRIBUTARY WIDTH 72" MAX FREE SPAN.
SEE CONFIGURATIONS NOTED AS DOUBLE BRACED CONDITIONS IN DETAIL 1/6)

MULLION SPAN (O.A.)	TRIBUTARY WIDTH 24"	30"	36"
144"	+ 42.8 / - 42.8	+ 34.2 / - 34.2	+ 28.5 / - 28.5
132"	+ 46.6 / - 46.6	+ 37.3 / - 37.3	+ 31.1 / - 31.1
120"	+ 51.3 / - 51.3	+ 41.0 / - 41.0	+ 34.2 / - 34.2
108"	+ 57.0 / - 57.0	+ 45.6 / - 45.6	+ 38.0 / - 38.0

PRODUCT REVISED
to complying with the Florida
Building Code
Acceptance No. 10-1115.03
Expiration Date AUG 19, 2014
By Ishaq I. Chanda
Miami-Dade Product Control

FRANK L. BENNARDO, P.E.
#FL#46549
STATE OF FLORIDA
LICENSED
04/12/2012
No. 46549
PROFESSIONAL ENGINEER

ENGINEERING EXPRESS, INC.
160 SW 12th AVENUE
DEERFIELD BEACH, FL 33442
Ph: (954) 354-0660 Fax: (954) 354-0443
WWW.ENGEXP.COM
CERT OF AUTH #6985
A. FRANK L. BENNARDO, P.E., INC. INCORPORATION

JELDWEN
3737 LAKEPORT BOULEVARD
KLAMATH FALLS, OREGON 97624
PHONE: 1-800-JELDWEN (1-800-535-3936)

CLIPPED ALUMINUM MULLION
LARGE MISSILE IMPACT RESISTANT
MIAMI-DADE NOTICE OF ACCEPTANCE

REMARKS	DRWN	CHKD	DATE
INIT ISSUE	KL	FLB	08/02/10
REV. PER ENG COMMENTS	KL	FLB	07/08/11
ADD'L COMMENTS	KL	FLB	01/05/11
UPDATE FOR 2010 FBC	CSL	FLB	04/11/12

10-JWN-0022
SCALE: - 03
PAGE DESCRIPTION:
-
-

8

\\SERVER01\FileCabinet\01 Project Files\Jeld-Wen (JWN)\2010\10-JWN-0022_03c Clipped Aluminum Mullion (NOA)\10-JWN-0022_03c Clipped Aluminum Mullion (NOA).dwg
04/12/2012 - 1:55pm