MIAMI-DADE COUNTY

BUILDING AND NEIGHBORHOOD COMPLIANCE DEPARTMENT (BNC)
BOARD AND CODE ADMINISTRATION DIVISION

MIAMI-DADE COUNTY
PRODUCT CONTROL SECTION
11805 SW 26 Street, Room 208
Miami, Florida 33175-2474
T (786) 315-2590 F (786) 315-2599
www.miamidade.gov/building

# NOTICE OF ACCEPTANCE (NOA)

**Fast Felt Corporation**
**11302 Memorial Drive**
**Houston, TX 77024**

**SCOPE:**
This NOA is being issued under the applicable rules and regulations governing the use of construction materials. The documentation submitted has been reviewed by Miami-Dade County Product Control Section and accepted by the Board of Rules and Appeals (BORA) to be used in Miami Dade County and other areas where allowed by the Authority Having Jurisdiction (AHJ).

This NOA shall not be valid after the expiration date stated below. The Miami-Dade County Product Control Section (In Miami Dade County) and/or the AHJ (in areas other than Miami Dade County) reserve the right to have this product or material tested for quality assurance purposes. If this product or material fails to perform in the accepted manner, the manufacturer will incur the expense of such testing and the AHJ may immediately revoke, modify, or suspend the use of such product or material within their jurisdiction. BORA reserves the right to revoke this acceptance, if it is determined by Miami-Dade County Product Control Section that this product or material fails to meet the requirements of the applicable building code.

This product is approved as described herein, and has been designed to comply with the Florida Building Code and the High Velocity Hurricane Zone of the Florida Building Code.

**DESCRIPTION: FAST FELT®**

**LABELING:** Each unit shall bear a permanent label with the manufacturer's name or logo, city, state and following statement: "Miami-Dade County Product Control Approved", unless otherwise noted herein.

**RENEWAL** of this NOA shall be considered after a renewal application has been filed and there has been no change in the applicable building code negatively affecting the performance of this product.

**TERMINATION** of this NOA will occur after the expiration date or if there has been a revision or change in the materials, use, and/or manufacture of the product or process. Misuse of this NOA as an endorsement of any product, for sales, advertising or any other purposes shall automatically terminate this NOA. Failure to comply with any section of this NOA shall be cause for termination and removal of NOA.

**ADVERTISEMENT:** The NOA number preceded by the words Miami-Dade County, Florida, and followed by the expiration date may be displayed in advertising literature. If any portion of the NOA is displayed, then it shall be done in its entirety.

**INSPECTION:** A copy of this entire NOA shall be provided to the user by the manufacturer or its distributors and shall be available for inspection at the job site at the request of the Building Official.

This NOA revises NOA No. 08-0118.17 and consists of pages 1 through 4.
The submitted documentation was reviewed by Jorge L. Acebo.

MIAMI-DADE COUNTY APPROVED

**NOA No.: 10-1118.03**
**Expiration Date: 01/15/14**
**Approval Date: 03/17/11**

## ROOFING COMPONENT APPROVAL

**Category:** Roofing
**Sub-Category:** Underlayment
**Material:** Asphalt

## SCOPE:

This acceptance is for **FAST FELT®** roofing underlayment as described in this Notice of Acceptance, for use with approved prepared roof assemblies where ASTM D226 Type II underlayment and tin caps are specified and installed with prescribed approved fasteners and fastener densities. (See limitations below.)

## PRODUCT DESCRIPTION:

| Product | Dimensions | Test Specification | Product Description |
|---|---|---|---|
| **FAST FELT®** | 36" x 72' rolls | ASTM D 226 Type II | Asphalt Saturated Felt underlayment with intergrated nylon fastening tabs. |

## MANUFACTURING LOCATION:

1. Houston, TX

## EVIDENCE SUBMITTED:

| Test Agency | Test Identifier | Test Name/Report | Date |
|---|---|---|---|
| Underwriters Laboratories, Inc. | 02NK49693 | UL790 | 01/07/03 |
| PRI Construction Materials Technologies | ATL-058-02-01 | ASTM D226 | 10/14/10 |
| Exterior Research & Design, LLC | #01460.06.03 | TAS 117 | 06/26/03 |
| | #01460.12.05 | | 12/21/05 |
| Trinity \| ERD | L7770.09.07-1-R1 | TAS 114-C | 01/07/08 |
| | L7770.01.08-2 | TAS 117-B/ Dip Test | 01/07/08 |
| | L7770.01.08-1 | Incline Test | 01/07/08 |
| | L7770.11.10 | TAS 117-B | 11/15/10 |

## APPROVED ASSEMBLIES:

**Deck Type 1:** Wood, Non-insulated

**Deck Description:** $^{19}/_{32}$" or greater plywood or wood plank

**System E(1):** Base sheet mechanically fastened TO deck.

**Base Sheet:** One or more plies of Fast Felt® with a minimum 4" side lap and a 6" end lap mechanically fastened to deck with approved nails at a spacing of 6" o.c. at the laps and two staggered rows 12" o.c. the field of the roll.

**Surfacing:** Approved Roof assemblies.

## INSTALLATION REQUIREMENTS:

1. All nail fasteners securing Fast Felt® to the roof deck shall be nailed through the **center** of the Fast Felt® Nylon fastening tab (¼" maximum deviation) which is integrally attached to the Fast Felt® underlayment. See Detail "A".
2. The flat underside of the head of each nail fastener securing Fast Felt® to the roof deck shall be driven flush to the surface of the Fast Felt® Nylon fastening tab.
3. Fast Felt® underlayment shall be installed in accordance with the applicable Roofing Application Standard that pertains to the approved roofing system in which it is used.

**Detail "A"**
**FAST FELT® NAIL FASTENING PATTERN**

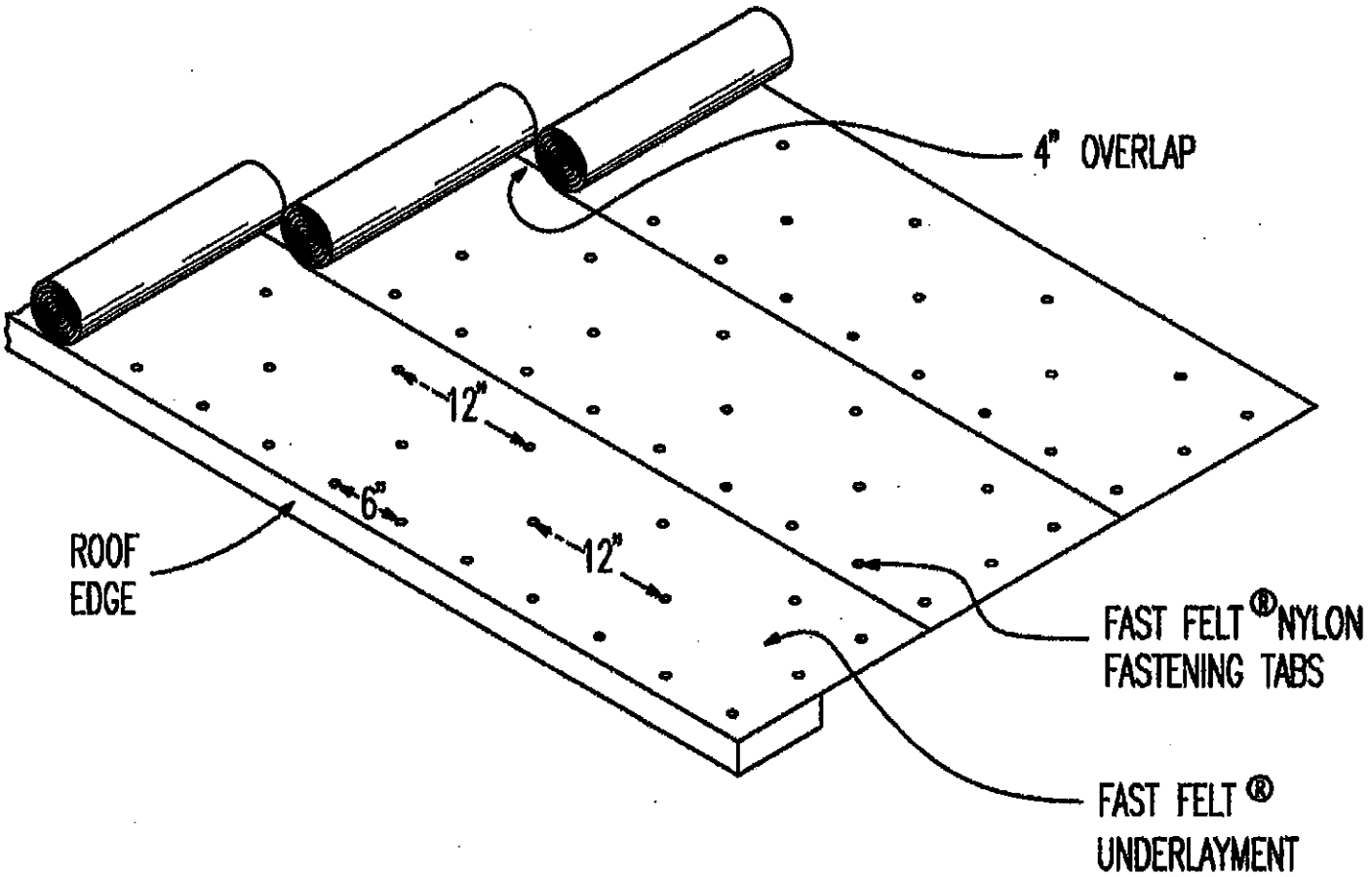

## GENERAL LIMITATIONS:

1. Fire classification is not part of this acceptance.
2. This acceptance is for prepared roofing applications. Minimum deck requirements shall be in compliance with applicable building code. Fast Felt® underlayment shall be installed in strict compliance with applicable Building Code.
3. Fast Felt® underlayment shall be applied to a smooth, clean and dry surface with deck free of irregularities.
4. All nails in the deck shall be carefully checked for protruding heads. Re-fasten any loose decking panels. Sweep the deck thoroughly to remove any dust and debris prior to application.
5. Fast Felt® underlayment shall not be applied over an existing roof membrane as a recover system.
6. Fast Felt® underlayment shall not be left exposed as a temporary roof for longer than 30 days of application.
7. Refer to Prepared Roofing system Product Control Notice of Acceptance for listed approval of this product with specific prepared roofing products.
8. Fast Felt® underlayment may be used with any approved roof covering Notice of Acceptance listing Fast Felt® underlayment as a component part of an assembly in the Notice of Acceptance. If Fast Felt® underlayment is not listed; a request may be made to the Authority Having Jurisdiction (AHJ) or the Miami-Dade County Product Control Department for approval provided that appropriate documentation is provided to detail compatibility of the products, wind uplift resistance, and fire testing results.
9. Flash vent pipes, stacks, chimneys and penetrations in compliance with Roof Assembly current Product Control Notice of Acceptance and applicable Building Code.
10. All membranes or packaging shall bear the imprint or identifiable marking of the manufacturer's name or logo and the following statement: "Miami-Dade County Product Control Approved" or the Miami-Dade County Product Control Seal as shown below.

MIAMI-DADE COUNTY APPROVED

# END OF THIS ACCEPTANCE