BUILDING AND NEIGHBORHOOD COMPLIANCE DEPARTMENT (BNC)
BOARD AND CODE ADMINISTRATION DIVISION

MIAMI-DADE COUNTY
PRODUCT CONTROL SECTION
11805 SW 26 Street, Room 208
Miami, Florida 33175-2474
T (786) 315-2590 F (786) 315-2599
www.miamidade.gov/building

NOTICE OF ACCEPTANCE (NOA)

Reynolds Metals Company dba Alcoa Architectural Products
100 Industrial Boulevard
Eastman, GA 31023

SCOPE:

This NOA is being issued under the applicable rules and regulations governing the use of construction materials. The documentation submitted has been reviewed by Miami-Dade County Product Control Section and accepted by the Board of Rules and Appeals (BORA) to be used in Miami Dade County and other areas where allowed by the Authority Having Jurisdiction (AHJ).

This NOA shall not be valid after the expiration date stated below. The Miami-Dade County Product Control Section (In Miami Dade County) and/or the AHJ (in areas other than Miami Dade County) reserve the right to have this product or material tested for quality assurance purposes. If this product or material fails to perform in the accepted manner, the manufacturer will incur the expense of such testing and the AHJ may immediately revoke, modify, or suspend the use of such product or material within their jurisdiction. BORA reserves the right to revoke this acceptance, if it is determined by Miami-Dade County Product Control Section that this product or material fails to meet the requirements of the applicable building code.

This product is approved as described herein, and has been designed to comply with the Florida Building Code, including the High Velocity Hurricane Zone.

DESCRIPTION: Reynobond Composite Panels

APPROVAL DOCUMENT: Drawing No. **MD-001,** titled "Reynobond® w/ PE-FR", sheets 1 through 21 of 21, prepared by Alcoa Architectural Products, dated 03/07/11, with revision "02", signed and sealed by Milton Cubas, P.E., bearing the Miami-Dade County Product Control approval stamp with the Notice of Acceptance number and approval date by the Miami-Dade County Product Control Section.

MISSILE IMPACT RATING: Large and Small Missile Impact Resistant

LABELING: Each component shall bear a permanent label with the manufacturer's name, city, state and following statement: "Miami-Dade County Product Control Approved or MDCPCA", as follows:

1. Alcoa Architectural Products, Eastman, GA - Miami-Dade County Product Control Approved
2. Alcoa Architectural Products, Merxheim, France - Miami-Dade County Product Control Approved

RENEWAL of this NOA shall be considered after a renewal application has been filed and there has been no change in the applicable building code negatively affecting the performance of this product.

TERMINATION of this NOA will occur after the expiration date or if there has been a revision or change in the materials, use, and/or manufacture of the product or process. Misuse of this NOA as an endorsement of any product, for sales, advertising or any other purposes shall automatically terminate this NOA. Failure to comply with any section of this NOA shall be cause for termination and removal of NOA.

ADVERTISEMENT: The NOA number preceded by the words Miami-Dade County, Florida, and followed by the expiration date may be displayed in advertising literature. If any portion of the NOA is displayed, then it shall be done in its entirety.

INSPECTION: A copy of this entire NOA shall be provided to the user by the manufacturer or its distributors and shall be available for inspection at the job site at the request of the Building Official.

This NOA consists of this page 1 and evidence pages E-1 and E-2, as well as approval document mentioned above.

The submitted documentation was reviewed by **Carlos M. Utrera, P.E.**

MIAMI-DADE COUNTY APPROVED

03/23/11

NOA No. 10-1118.05
Expiration Date: March 31, 2016
Approval Date: March 31, 2011

NOTICE OF ACCEPTANCE: EVIDENCE SUBMITTED

A. **DRAWINGS**

1. Drawing No. **MD-001,** titled "Reynobond® w/ PE-FR", sheets 1 through 21 of 21, prepared by Alcoa Architectural Products, dated 03/07/11, with revision "02", signed and sealed by Milton Cubas, P.E.

B. **TESTS**

1. Test reports on 1) Uniform Static Air Pressure Test, Loading per FBC TAS 202-94
   2) Cyclic Wind Pressure Loading per FBC, TAS 203-94
   along with marked-up drawings and installation diagram of Reynobond® Wall Panels, prepared by Hurricane Test Laboratory, LLC, Test Report No. **0423-0218-06**, dated 04/17/09, signed and sealed by Vinu J. Abraham, P.E.

   "Submitted under NOA # 09-0625.01"

2. Test reports on 1) Air Infiltration Test, per FBC, TAS 202-94
   2) Uniform Static Air Pressure Test, Loading per FBC TAS 202-94
   3) Water Resistance Test, per FBC, TAS 202-94
   4) Small Missile Impact Test per FBC, TAS 201-94
   5) Cyclic Wind Pressure Loading per FBC, TAS 203-94
   along with marked-up drawings and installation diagram of Reynobond® Wall Panels, prepared by Hurricane Test Laboratory, LLC, Test Report No. **0423-0218-06**, dated 04/17/09, signed and sealed by Vinu J. Abraham, P.E.
3. Test reports on 1) Air Infiltration Test, per FBC, TAS 202-94
   2) Uniform Static Air Pressure Test, Loading per FBC TAS 202-94
   3) Water Resistance Test, per FBC, TAS 202-94
   4) Small Missile Impact Test per FBC, TAS 201-94
   5) Cyclic Wind Pressure Loading per FBC, TAS 203-94
   along with marked-up drawings and installation diagram of Reynobond® Wall Panels, prepared by Hurricane Test Laboratory, LLC, Test Report No. **0423-0112-07**, dated 04/17/09, signed and sealed by Vinu J. Abraham, P.E.
4. Test report on Surface Burning Characteristics of the Reynobond® panels with LDPE core in accordance with ASTM E84-05, prepared by Omega Point Laboratories, Inc., Report No. **8902-118985**, dated 06/14/04, signed by Eric G. Hutchinson.
5. Test report on Surface Burning Characteristics of the 4mm PE Reynobond® panels in accordance with ASTM E84-05, prepared by Omega Point Laboratories, Inc., Report No. **8902-122031**, dated 11/12/04, signed by Eric G. Hutchinson.

03/23/11

Carlos M. Utrera, P.E.
Product Control Examiner
NOA No. 10-1118.05
Expiration Date: March 31, 2016
Approval Date: March 31, 2011

NOTICE OF ACCEPTANCE: EVIDENCE SUBMITTED

B. TESTS (Cont.) ***"Submitted under NOA # 06-1025.03"***

6. Test report on Surface Burning Characteristics of the 4mm Reynobond® panels with FR core in accordance with ASTM E84-05, prepared by Omega Point Laboratories, Inc., Report No. **8902-117346**, dated 02/06/04, signed by Guy A. Haby.
7. Test report on Self Ignition Temperature for the polyethylene resin in accordance with ASTM D1929, prepared by Polyhedron Laboratories, Inc., report No. 4500317871 dated 07/29/05, signed by Howard Kaye, Ph.D.
8. Test report on Rate of Burning of Plastics in Horizontal Position for the Reynobond® with Kevlar® wall panel in accordance with ASTM D635-03, prepared by Applied Technical Services, Inc., report No. D103926 dated 07/12/06, signed by F. Lopez and E.W. Sproat.
9. Test report on tensile strength of Reynobond® with Kevlar® wall panel in accordance to ASTM E8, prepared by Q.C. Metallurgical, Inc. Report No. 6HM-680 dated 08/28/06, signed by Frank Grate, P.E.

C. CALCULATIONS

1. Calculations titled "Reynobond", pages 1 through 36 of 36, prepared by Milton Cubas, P.E., Inc., dated 03/28/09, signed and sealed by Milton Cubas, P.E.

D. QUALITY ASSURANCE

1. Miami-Dade Building and Neighborhood Compliance Department (BNC)

E. MATERIAL CERTIFICATIONS

1. Dow Corning® 795 Silicone Building Sealant.
2. Dow Corning® 995 Silicone Structural Adhesive.
3. Dow Corning® 983 Silicone Glazing and Curtainwall Adhesive/Sealant.

F. STATEMENTS

1. No interest letter prepared by Milton Cubas, P.E., Inc., dated 10/25/10, signed and sealed by Milton Cubas, P.E.
2. Statement of compliance with the Florida Building Code 2007, prepared by Milton Cubas, P.E., Inc., dated 10/25/10, signed and sealed by Milton Cubas, P.E.
3. Statement of compliance with the Florida Building Code prepared by Hurricane Test Laboratory, LLC, dated 04/17/09, signed and sealed by Vinu J. Abraham, P.E.

03/23/11

Carlos M. Utrera, P.E.
Product Control Examiner
NOA No. 10-1118.05
Expiration Date: March 31, 2016
Approval Date: March 31, 2011

GENERAL NOTES:

These Reynobond® composite panels shall be used for wall, soffit, canopy, fascia construction, or as a wall cladding system. Each actual wall project shall be constructed using the details shown on these drawings as minimum required specifications. Panels can run horizontally or vertically. Steel metal frames must be 90 degrees relative to the stiffener / retainer. Over CMU or concrete no restrictions apply.

A - METAL SKIN
B - TIE LAYER BETWEEN SKIN AND CORE
C - CORE POLYMERIC COMPOUND (FR - Fire Retardant)
(PE - Polyethylene)
(Core thickness may vary upon material skin type)
D - FINISH - paint finish or natural metal surface

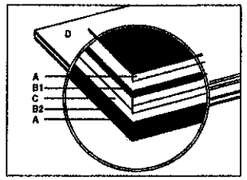

PERFORMED TESTS

DESCRIPTION	TEST
a) Tensile Test	ASTM E-8
b) Self Ignition	ASTM D-1929
c) Flame Spread 1	ASTM E-84
d) Smoke Developed 1	ASTM E-84
e) Thermal Barrier	ASTM E119
f) Interior Finish Application Fire Test	UL 1715
g) Multi-story Fire Test	NFPA 285
h) Fire Test of Building Construction & Materials	UL 263 R8343

BILL OF MATERIALS

1. PANEL MATERIAL: **Reynobond®** metal composite material 4 mm and 6mm thick as manufactured by Alcoa Architectural Products.
   a) FR ALUMINUM PANEL SKIN THICKNESS 0.020" inches (3105-H25)
   b) PE ALUMINUM PANEL SKIN THICKNESS 0.020" inches (3105-H25)
   c) FR ZINC PANEL SKIN THICKNESS 0.028" ZINC ALLOY (NOTES: 1) ONLY UP TO 100 PSF,
   d) PE or FR STAINLESS STEEL PANEL SKIN THICKNESS 0.018" SS ALLOY 304 or 316L
   e) PE or FR TITANIUM PANEL SKIN THICKNESS 0.018", back skin Stainless Steel .0018"

2. ALUMINUM EXTRUSIONS. Aluminum alloy 6063 - T5 temper, mill finish
   a) FRAME (CONTINUOUS)
   b) CLIP (CONTINUOUS)
   c) STIFFENER (CONTINUOUS)
   d) RETAINER
   e) CORNER ANGLE

3. METAL STUDS 16ga galvanized or painted steel (per applicable codes to prevent corrosion) with minimum properties of 50 Ksi yield, 65 Ksi ultimate. Minimum 1 5/8" flange, 6" web. Calculations must be provided by a registered engineer

4. STUD TO TRACK FASTENERS and ANGLE TO BRIDGING FASTENERS and ANGLE TO STUD FASTENERS
#8-18 x ¾" Phillips Head Galvanized Steel Pan Tek Screw or similar.

5. PANEL TO FRAME FASTENERS.
#10 x 1" wafer head, self drilling, self tapping, galvanized steel screws, at 16" O.C., at all Panel Perimeter Returns.

6. HORIZONTAL AND VERTICAL JOINT SILICONE (as needed).
   a) Dow Corning #995 - 170 PSI - One part.
   b) Dow Corning #983 - 170 PSI - Two parts.
   c) Dow Corning #795 - 100 PSI - One part. Horizontal, Vertical and perimeter joint - Weather seal.
   d) Dow Corning #795 - 100 PSI - One part Cap Bead - Weather seal.
   e) Dow Corning #795 - 100 PSI - One part Panel to frame, frame and corner weather seal.
   (Only for dry seal system. For wet seal system do not apply)
   Dow Corning #795 can be replaced by Dow Corning "CWS"
   f) Where water intrusion is not a requirement, the system can be used as rain screen
   No "weather sealant" silicone required - B.O.M. # 15, # 06d, # 06e, # 06c, # 07a
   Recommended use of stainless steel screws B.O.M. # 05, # 08

7. BACKER ROD. (as needed)
   a) 5/8" diameter, open cell. b) 1 ½" diameter, open cell. c) 2" diameter, open cell.

8. CLIP AND RETAINER TO SUBSTRATE FASTENER (as needed)
   a) 1 # 14 - HEX WASHER HEAD - 1 1/2" - DRILL POINT
   b) 1 # 14 - HEX WASHER HEAD - 1" - SHARP POINT
   c) 1 # 14 - HEX WASHER HEAD - 2 1/2" - DRILL POINT
   d) 2 # 14 - HEX WASHER HEAD - 2 1/2" - DRILL POINT
   e) 2 # 12 - HEX WASHER HEAD - 1 1/2" - DRILL POINT
   f) 2 # 12 - HEX WASHER HEAD - 2 1/2" - DRILL POINT
   g) 2 # 12 - HEX WASHER HEAD - 1" - SHARP POINT
   h) 1 # 14 - TAPCON OR SIMILAR - 1 1/2"
   i) 2 # 14 - TAPCON - 1 1/2"
   j) 2 # 14 - HEX WASHER HEAD - 1 1/2" - DRILL POINT
   k) 2 # 12 - HEX WASHER HEAD - 2 1/2" - DRILL POINT

Notes Screw 08h: CMU and CONCRETE edge condition restrictions (All references and limitations are measured from the CONCRETE or CMU edge)
1) Minimum fastener embedment of 1.25" required
2) The quantity of required fasteners per the schedule is double when attached within 2.5" maximum and 1" minimum from the edge condition (below 1" is not acceptable),
3) Fasteners installed on both opposite and adjacent sides of an edge condition must have a 4" minimum stagger. (reference drawing xx page 21)
4) 16" OC screw spacing requires fasteners staggered at 8" OC
5) 24" OC screw spacing requires fasteners staggered at 12" OC
6) Reference drawinga: #8 on pg 12, #10 on pg 15, #9 on pg. 21

CHART AND SCHEDULE (Aluminum clip to metal stud)

Reynobond Product	Substrate Backer	Stud Spacing	Max Screw Spacing "other than perimeter"	Design Presure PSF	Impact Rating	Building Applicability
Reynobond PE and FR Aluminum Titanium Stainless Steel Zinc**	7.2" RIB 20 ga. steel panel	36" O.C.	(1) 24" O.C. vert.	100	Small & Large Missile Impact	Above & Below 30 feet
			14.4" O.C. Horz.	120		
			16" O.C. Vert. (2) 14.4" O.C. Horz.	130		
	PLYWOOD MIN. 5/8"	24" O.C.	(1) 24" O.C.	100		
		16" O.C.	(1) 16" O.C.	120		
			(2) 16" O.C.	130		
	CMU Concrete	N/A	(1) 24" O.C.	100		
		N/A	(1) 16" O.C.	130		

*** Reynobond Zinc is approved for all applicable installation conditions however, only at a design pressure of 100 psf. Reynobond Zinc only available in FR see B.O.M. #1c*

Note a) Perimeter (1) #14 screw spacing 16" O.C. up to 130 psf
Note b) Perimeter (1) #14 screw spacing 24" O.C. up to 100 psf

Joint Sizes (other than perimeter)	*1/2" to 3/4"*	*(1) #14 screw*
	1-1/2"	*(2) #12 screws*
Joint Sizes (perimeter)	*up to 2.5"*	*(1) #14 screw*

9. TRACK TO WOOD FRAME FASTENER. 5/16" x 2.5" galvanized steel LAG screw with washer. At 12" O.C. MAX.

10. 2 x 12" YELLOW PINE WOOD.

11. METAL TRACK 16ga galvanized steel or painted (per applicable codes to prevent corrosion) with minimum properties of 50 Ksi yield, 65 Ksi ultimate.

12. BRIDGING CHANNEL. 16ga galvanized or painted (per applicable codes to prevent corrosion) steel with minimum properties of 50 Ksi yield, 65 Ksi ultimate. Standard 1/2" flange, 1 1/2" web.
WALLS UP TO 10' HEIGHT 1 ROW @ MID-HEIGHT.
WALLS EXCEEDING 10' HEIGHT BRIDGING ROW SPACED NOT TO EXCEED 5' 0" O.C.

13. UTILITY ANGLE. 16ga galvanized or painted (per applicable codes to prevent corrosion) steel with minimum properties of 50 Ksi yield, 65 Ksi ultimate. Standard 6" wide, 2" leg dimensions. (Bridge Clip or equal).

14. SHIMS Standard glazing shims as needed. (Max. Perimeter 3/4"; Other than perimeter 1/2")

15. Uni-Grip ¼" neoprene hollow gasket.

16. 7.2" RIB 20 GAUGE STEEL GALVANIZED OR PAINTED PROFILE PANEL OR METAL DECK MIN 1.5" RIB DEPTH. (Framing must be calculated by a Professional Engineer)

17. STEEL BUCK.

18. Rebar Reinforced Concrete as per Florida Building Code

19. CMU block

20. PLYWOOD 5/8" - Option to be Pressure Treated and/or Fire Prof.

Approved as complying with the Florida Building Code
Date 03/31/2011
NOA# 10-1118.05
Miami Dade Product Control
By

3-11-11

Alcoa Architectural Products 50 Industrial Boulevard Eastman, Georgia 31023 USA Tel: (478) 374 6871 ALCOA	*SUBMITTAL DWG.* *DWG. NO. MD-001* *MIAMI DADE BUILDING CODE*	*DATE: 03-07-11* *REVISION: 02*
CONFIDENTIAL AND PROPRIETARY PROPERTY OF ALCOA ARCHITECTURAL PRODUCTS Which May Be Used Only For Its Benefit And Which May Not Be Reproduced Or Disclosed To Others. This Document And All Copies Must Be Returned On Demand.	*REYNOBOND® w/ PE-FR - LARGE MISSILE IMPACT* *BACKER SUPPORTS: CMU, 7.2" RIB PANEL 20ga, 5/8" PLYWOOD - BILL OF MATERIALS*	*SHEET: 01 OF 21*

REYNOBOND® w/ PE-FR w/BACKER SUPPORTS: CMU, 7.2" RIB PANEL 20ga, PLYWOOD 5/8".
BUILDING DETAILS

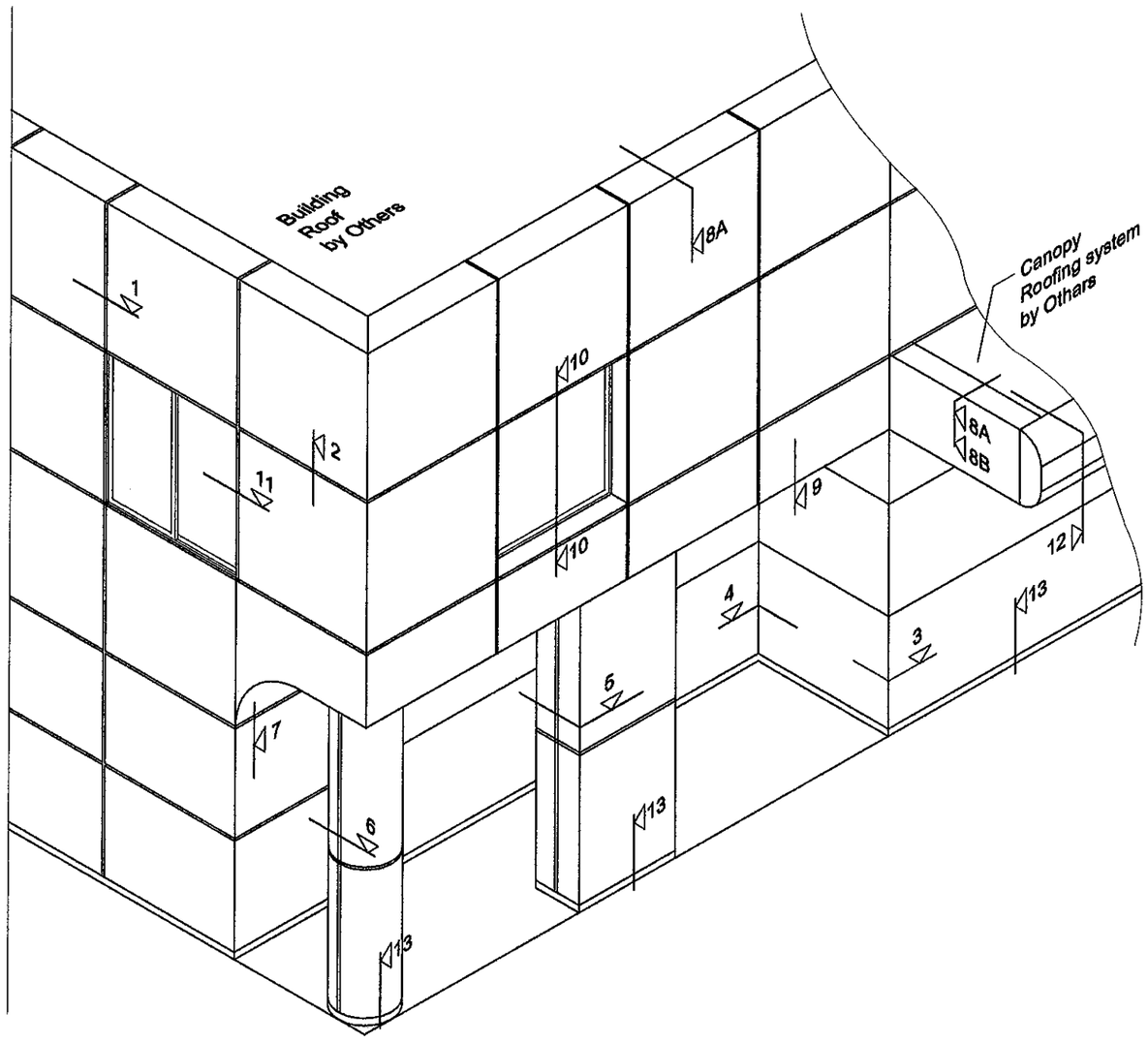

BUILDING CONDITION		
1	VERTICAL JOINT CONDITION	
2	HORIZONTAL JOINT	
3	EXTERNAL CORNER	
4	INTERNAL CORNER	
5	COLUMN COVER	
6	CURVED CONVEX	
7	CURVED CONCAVE	
8	PARAPET	w/ FLASHING (A)
		w/ REYNOBOND (B)
9	SOFFIT	
10	RECESS OPENING	
11	FLASH OPENING	
12	CANOPY	
13	BASE BOARD	

Approved as complying with the Florida Building Code
Date 03/31/2011
NOA# 10-1118.05
Miami Dade Product Control
By

3-11-11

Alcoa Architectural Products
50 Industrial Boulevard
Eastman, Georgia 31023 USA
Tel: (478) 374 6871

CONFIDENTIAL AND PROPRIETARY PROPERTY OF ALCOA ARCHITECTURAL PRODUCTS
Which May Be Used Only For Its Benefit And Which May Not Be Reproduced Or Disclosed To Others. This Document And All Copies Must Be Returned On Demand.

SUBMITTAL DWG.
DWG. NO. MD-002
MIAMI DADE BUILDING CODE

REYNOBOND® w/ PE-FR - LARGE MISSILE IMPACT
BACKER SUPPORTS: CMU, 7.2" RIB PANEL 20ga, PLYWOOD 5/8"
3D VIEW AND SECTIONS
DRY AND WET SEAL

DATE: 03-07-11
REVISION: 02
SHEET: 02 OF 21

REYNOBOND® w/ PE-FR w/BACKER SUPPORTS: CMU, 7.2" RIB PANEL 20ga, PLYWOOD 5/8".

VERTICAL JOINT – 3/4" WET
NOTE: ALL JOINTS APPLY TO ANY BUILDING CONDITION

1 SECTION DETAIL TOP / BOTTOM

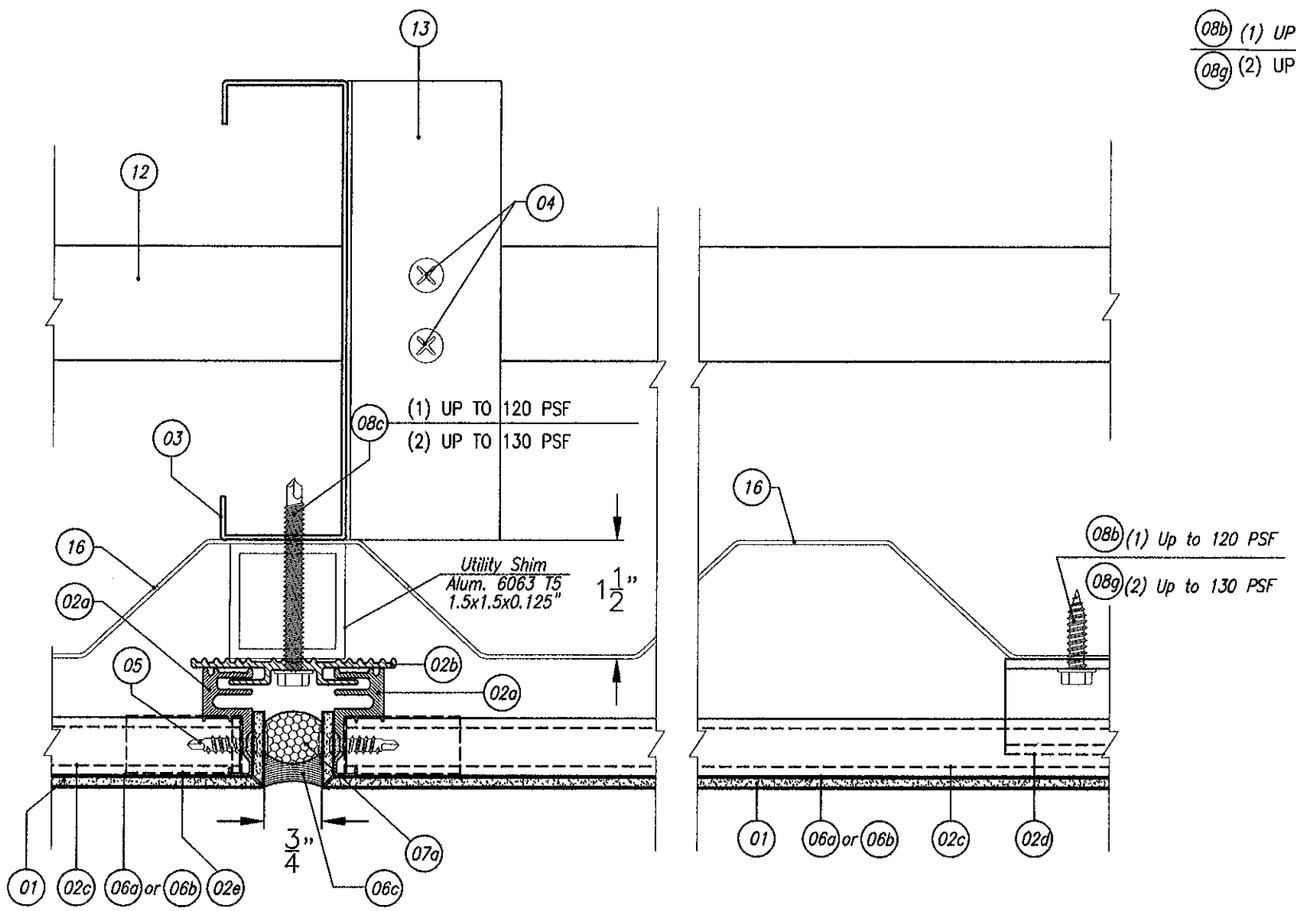

REYNOBOND® w/ PE-FR w/BACKER SUPPORTS: CMU, 7.2" RIB PANEL 20ga, PLYWOOD 5/8".

HORIZONTAL JOINT – 1/2" WET
NOTE: ALL JOINTS APPLY TO ANY BUILDING CONDITION

2 SECTION DETAIL RIGHT / LEFT

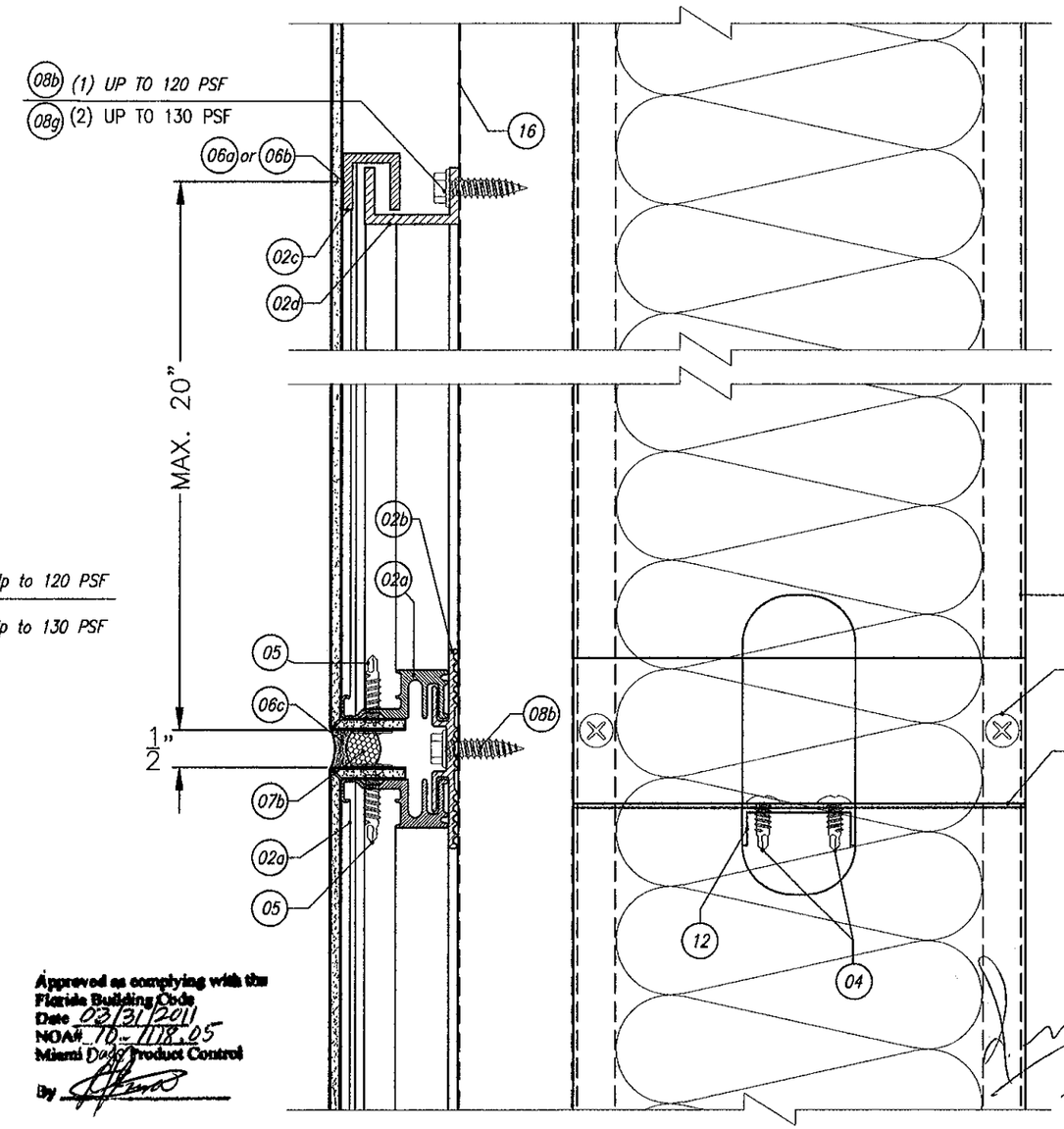

Approved as complying with the Florida Building Code
Date 03/31/2011
NOA# 10-1118.05
Miami Dade Product Control
By

3-11-11

Alcoa Architectural Products 50 Industrial Boulevard Eastman, Georgia 31023 USA Tel: (478) 374 6871 ALCOA	SUBMITTAL DWG. DWG. NO. MD-003 MIAMI DADE BUILDING CODE	DATE: 03-07-11 REVISION: 02
CONFIDENTIAL AND PROPRIETARY PROPERTY OF ALCOA ARCHITECTURAL PRODUCTS Which May Be Used Only For Its Benefit And Which May Not Be Reproduced Or Disclosed To Others. This Document And All Copies Must Be Returned On Demand.	REYNOBOND® w/ PE-FR – LARGE MISSILE IMPACT BACKER SUPPORTS: CMU, 7.2" RIB PANEL 20ga, PLYWOOD 5/8" ALL BUILDING CONDITIONS DRY AND WET SEAL	SHEET: 03 OF 21

REYNOBOND® PE/FR w/BACKER SUPPORT
OVER CMU
VERTICAL JOINT – 3/4" WET
NOTE: ALL JOINTS APPLY TO ANY BUILDING CONDITION

1 SECTION DETAIL TOP / BOTTOM

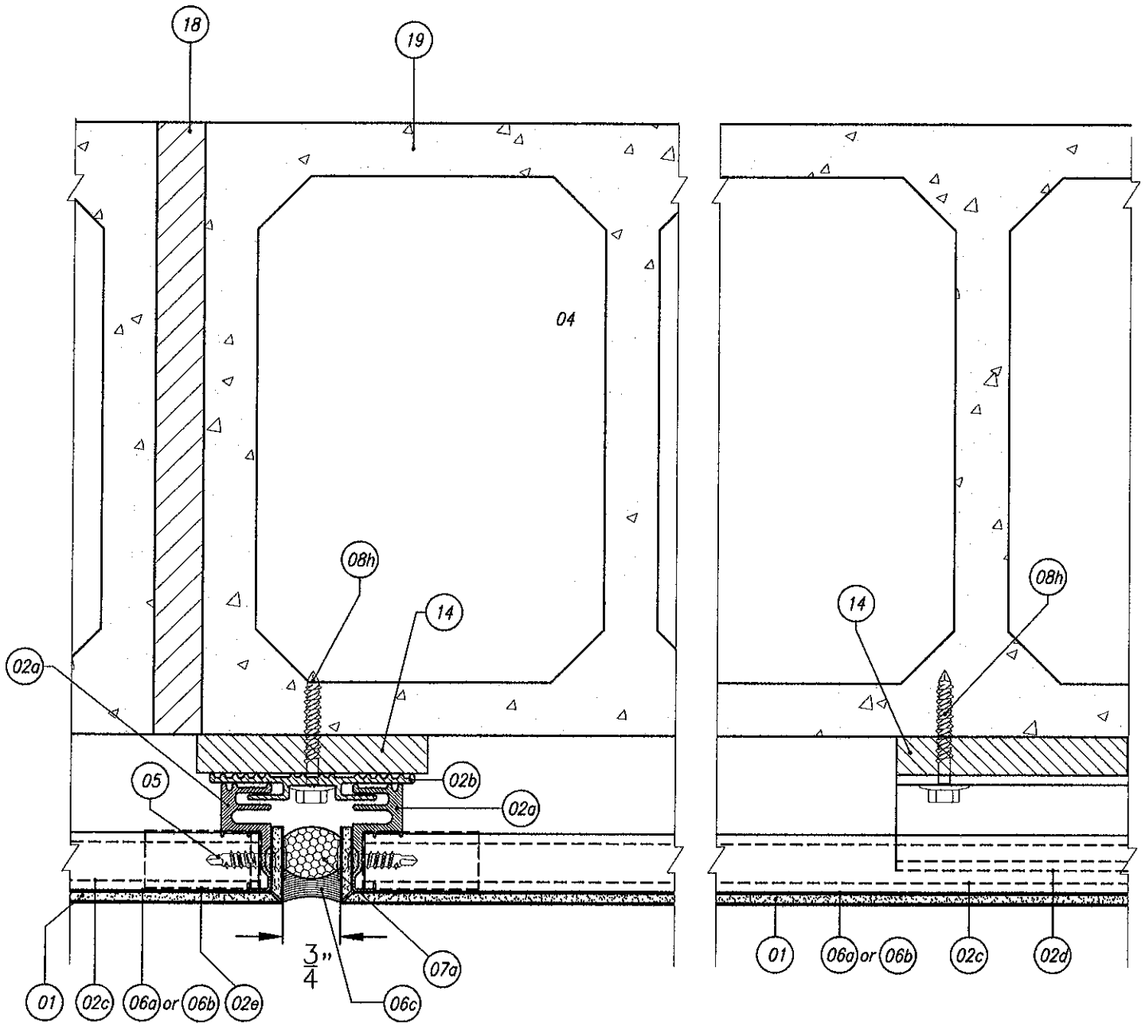

REYNOBOND® PE/FR w/BACKER SUPPORT
OVER CMU
HORIZONTAL JOINT – 1/2" WET
NOTE: ALL JOINTS APPLY TO ANY BUILDING CONDITION

2 SECTION DETAIL RIGHT / LEFT

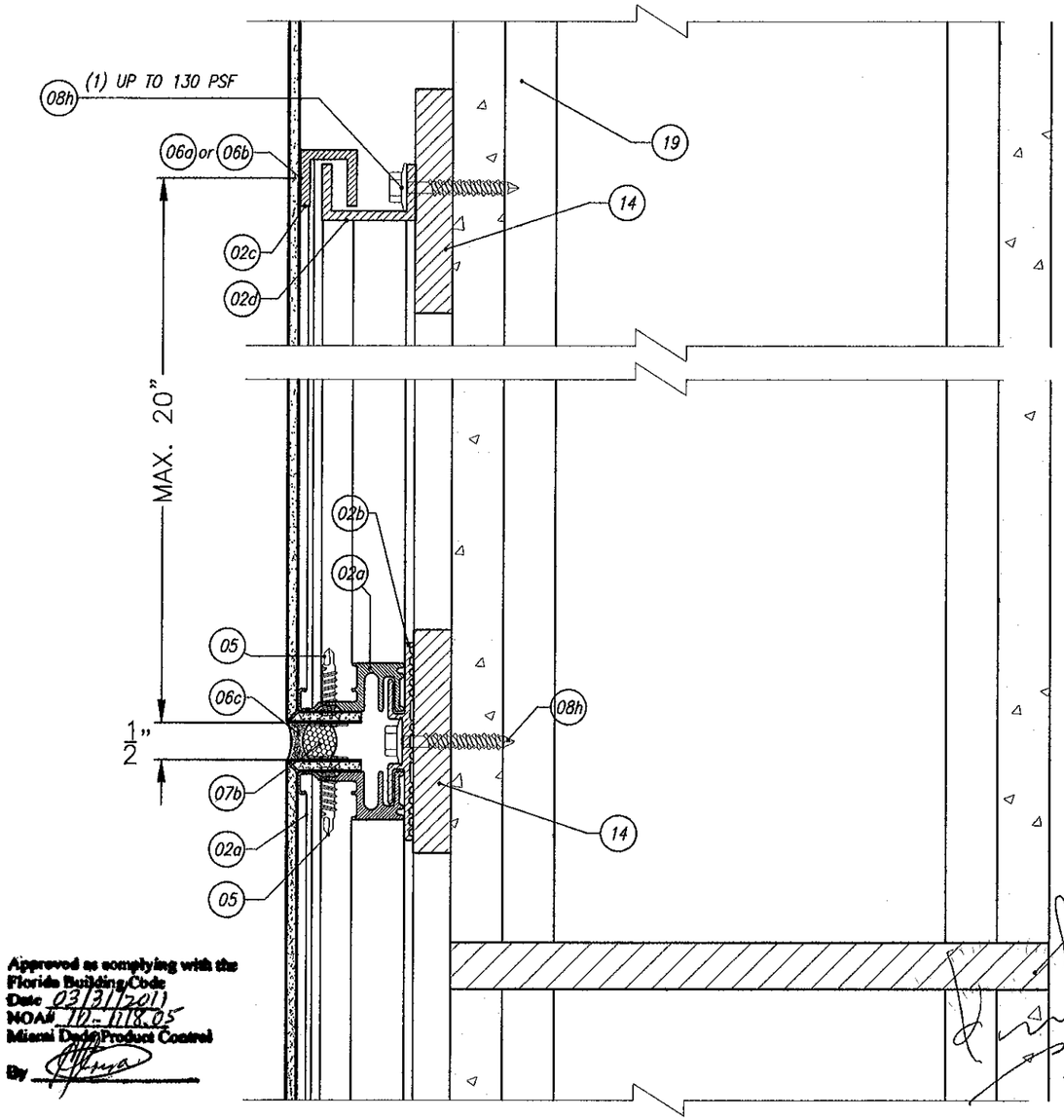

Approved as complying with the Florida Building Code
Date 03/31/2011
NOA# 10-1118.05
Miami Dade Product Control
By

Alcoa Architectural Products 50 Industrial Boulevard Eastman, Georgia 31023 USA Tel: (478) 374 6871 ALCOA	SUBMITTAL DWG. DWG. NO. MD–003 MIAMI DADE BUILDING CODE	DATE: 03–07–11 REVISION: 02
CONFIDENTIAL AND PROPRIETARY PROPERTY OF ALCOA ARCHITECTURAL PRODUCTS Which May Be Used Only For Its Benefit And Which May Not Be Reproduced Or Disclosed To Others. This Document And All Copies Must Be Returned On Demand.	REYNOBOND® w/ PE–FR – LARGE MISSILE IMPACT BACKER SUPPORTS: CMU or CONCRETE ALL BUILDING CONDITIONS DRY AND WET SEAL	SHEET: 04 OF 21

REYNOBOND® PE/FR w/BACKER SUPPORT OVER
7.2" RIB PANEL 20ga
VERTICAL JOINT – 1 1/2" DRY
NOTE: ALL JOINTS APPLY TO ANY BUILDING CONDITION

1 SECTION DETAIL TOP / BOTTOM

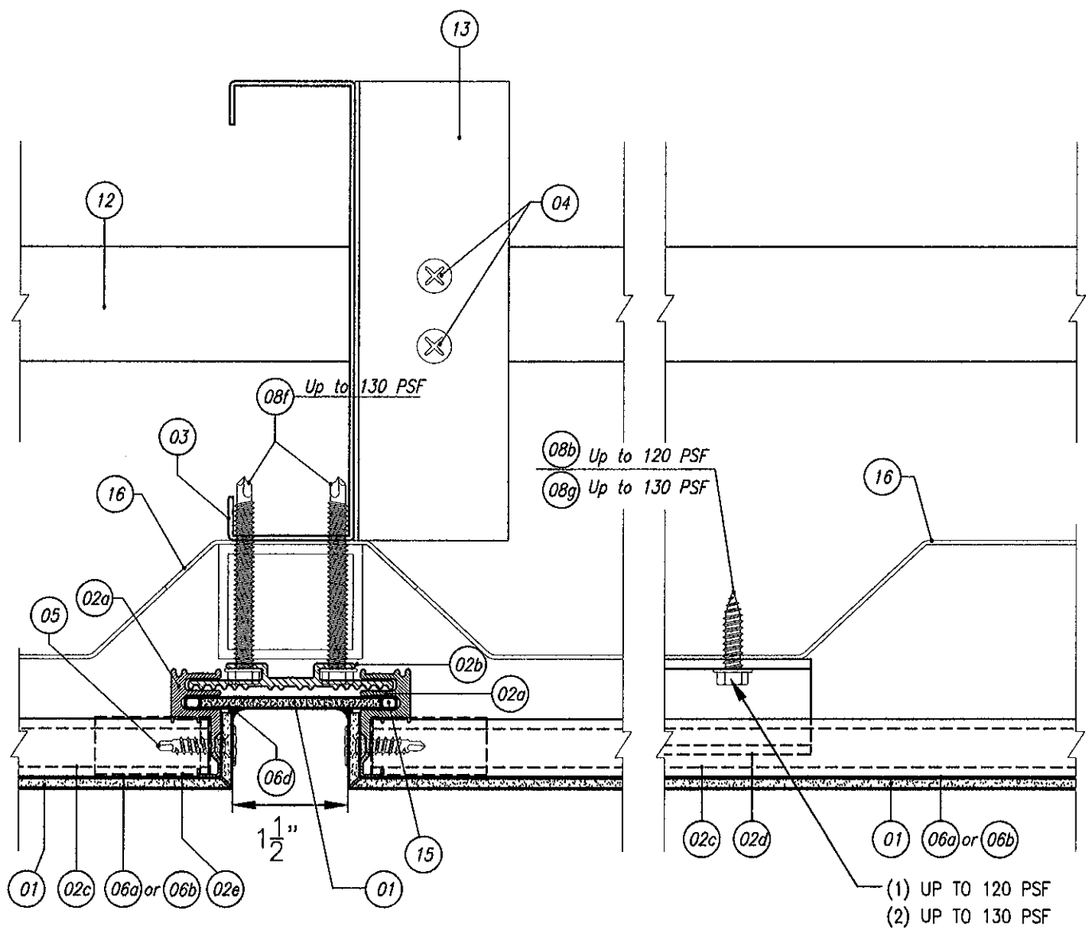

REYNOBOND® PE/FR w/BACKER SUPPORT OVER
7.2" RIB PANEL 20ga
HORIZONTAL JOINT – 3/4" DRY
NOTE: ALL JOINTS APPLY TO ANY BUILDING CONDITION

2 SECTION DETAIL RIGHT / LEFT

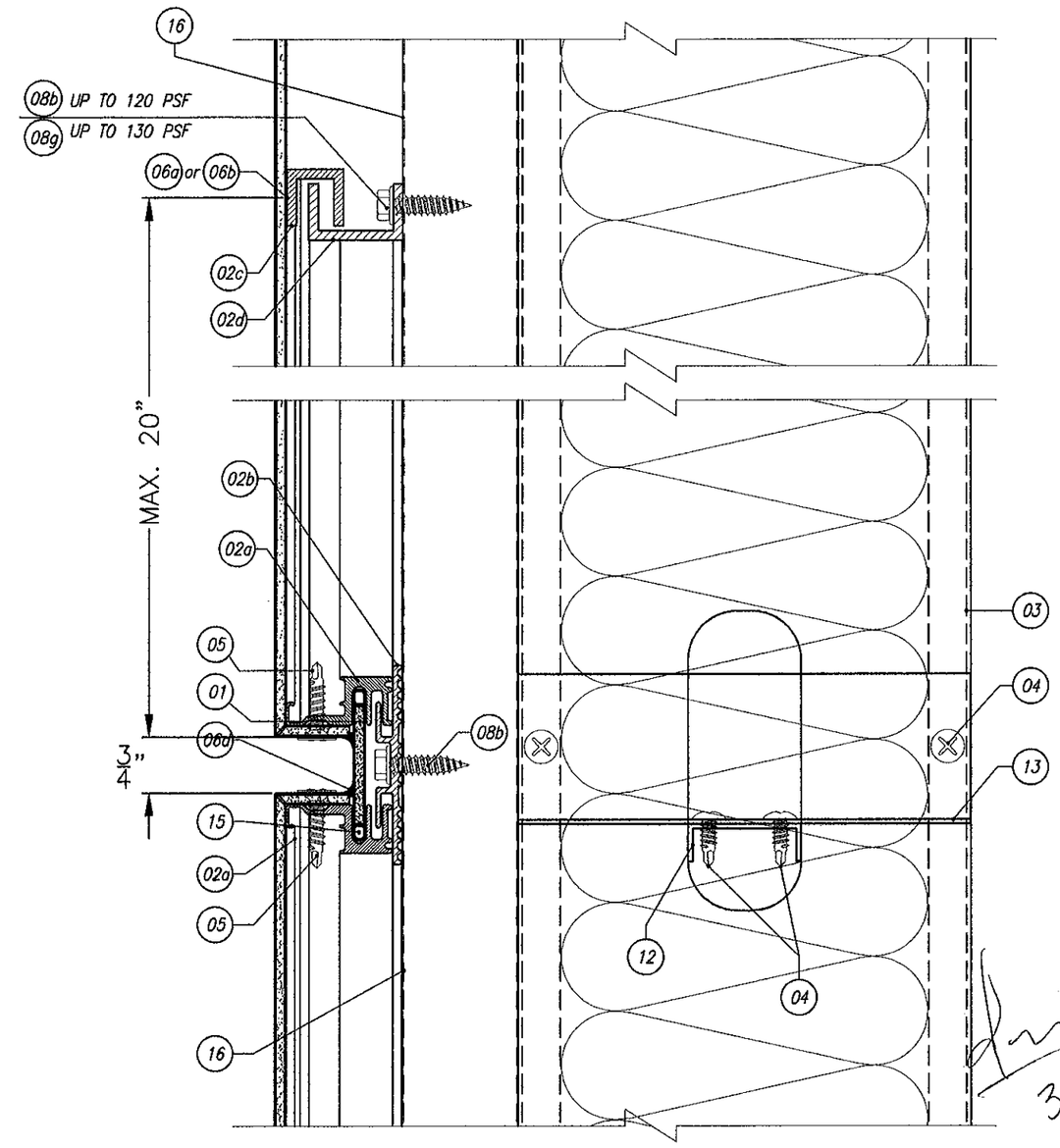

3-11-11

Approved as complying with the Florida Building Code
Date 03/31/2011
NOA# 10-1118.05
Miami Dade Product Control
By

Alcoa Architectural Products 50 Industrial Boulevard Eastman, Georgia 31023 USA Tel: (478) 374 6871 ALCOA	SUBMITTAL DWG. DWG. NO. MD–004 MIAMI DADE BUILDING CODE	DATE: 03–07–11 REVISION: 02
CONFIDENTIAL AND PROPRIETARY PROPERTY OF ALCOA ARCHITECTURAL PRODUCTS Which May Be Used Only For Its Benefit And Which May Not Be Reproduced Or Disclosed To Others. This Document And All Copies Must Be Returned On Demand.	REYNOBOND® PE/FR w/BACKER SUPPORT OVER 7.2" RIB PANEL 20ga ALL BUILDING CONDITIONS – LARGE MISSIL IMPACT DRY AND WET SEAL	SHEET: 05 OF 21

REYNOBOND® PE/FR w/ BACKER SUPPORT
OVER CMU
VERTICAL JOINT – 1 1/2" DRY
NOTE: ALL JOINTS APPLY TO ANY BUILDING CONDITION

1 SECTION DETAIL TOP / BOTTOM

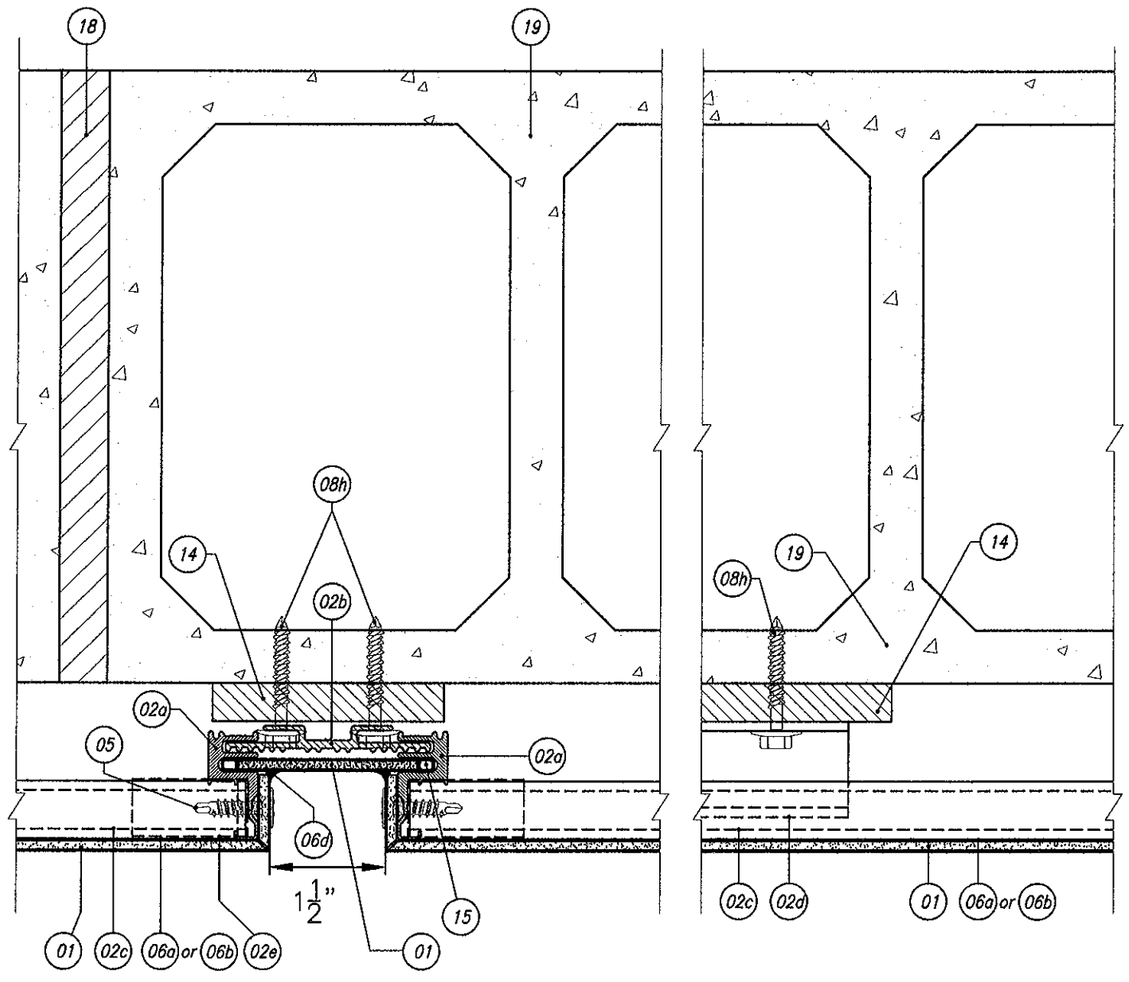

REYNOBOND® PE/FR w/ BACKER SUPPORT
OVER CMU
HORIZONTAL JOINT – 3/4" DRY
NOTE: ALL JOINTS APPLY TO ANY BUILDING CONDITION

2 SECTION DETAIL RIGHT / LEFT

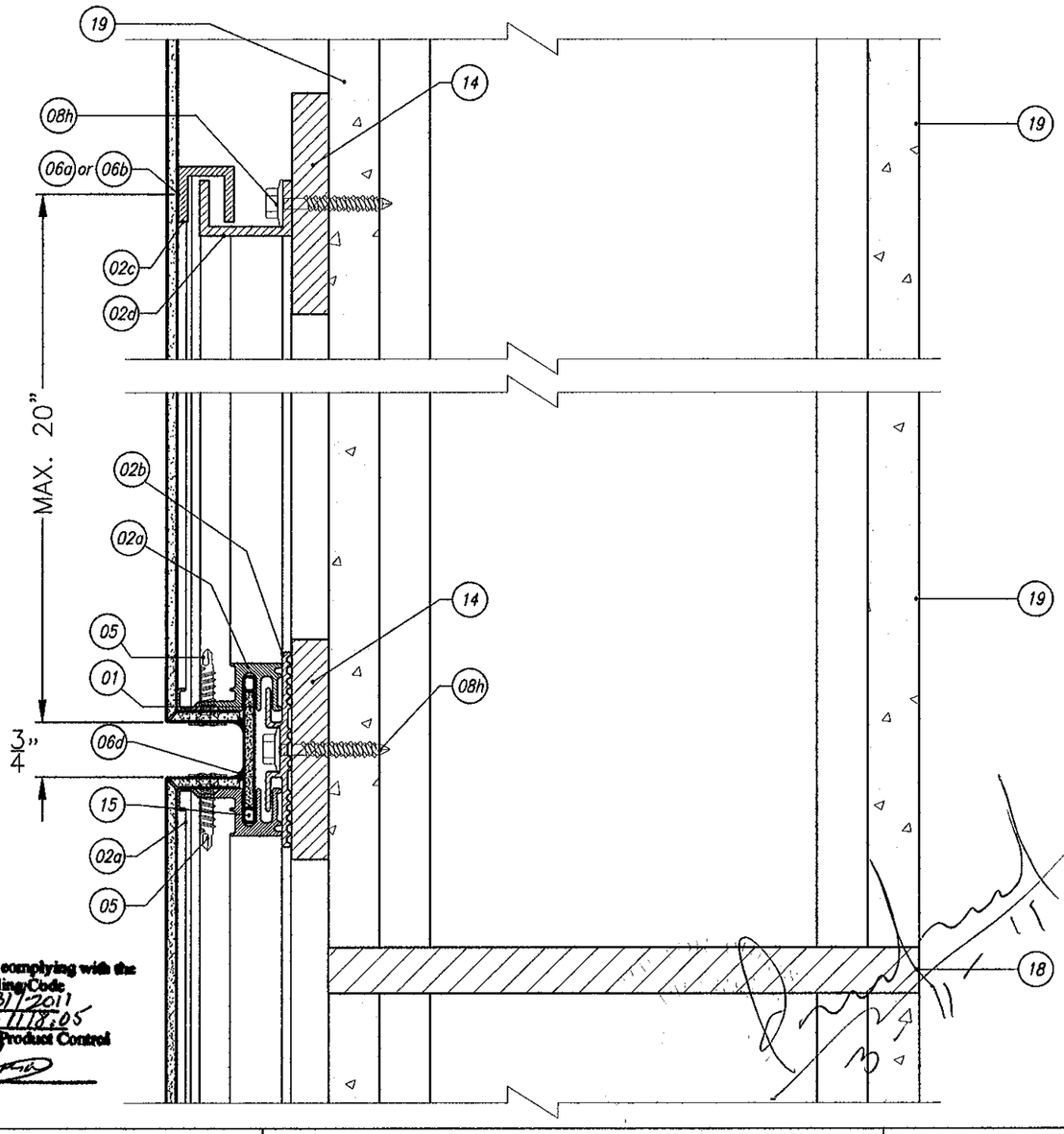

Approved as complying with the Florida Building Code
Date 03/31/2011
NOA# 10-1118.05
Miami Dade Product Control
By

Alcoa Architectural Products 50 Industrial Boulevard Eastman, Georgia 31023 USA Tel: (478) 374 6871 ALCOA	SUBMITTAL DWG. DWG. NO. MD–004 MIAMI DADE BUILDING CODE	DATE: 03–07–11 REVISION: 02
CONFIDENTIAL AND PROPRIETARY PROPERTY OF ALCOA ARCHITECTURAL PRODUCTS Which May Be Used Only For Its Benefit And Which May Not Be Reproduced Or Disclosed To Others. This Document And All Copies Must Be Returned On Demand.	REYNOBOND® wPE/FR LARGE MISSILE IMPACT BACKER SUPPORTS: CMU or CONCRETE ALL BUILDING CONDITIONS – LARGE MISSIL IMPACT DRY AND WET SEAL	SHEET: 06 OF 21

REYNOBOND® PE/FR w/ BACKER SUPPORT
7.2" RIB PANEL 20ga
EXTERNAL CORNER

3 SECTION DETAIL TOP / BOTTOM

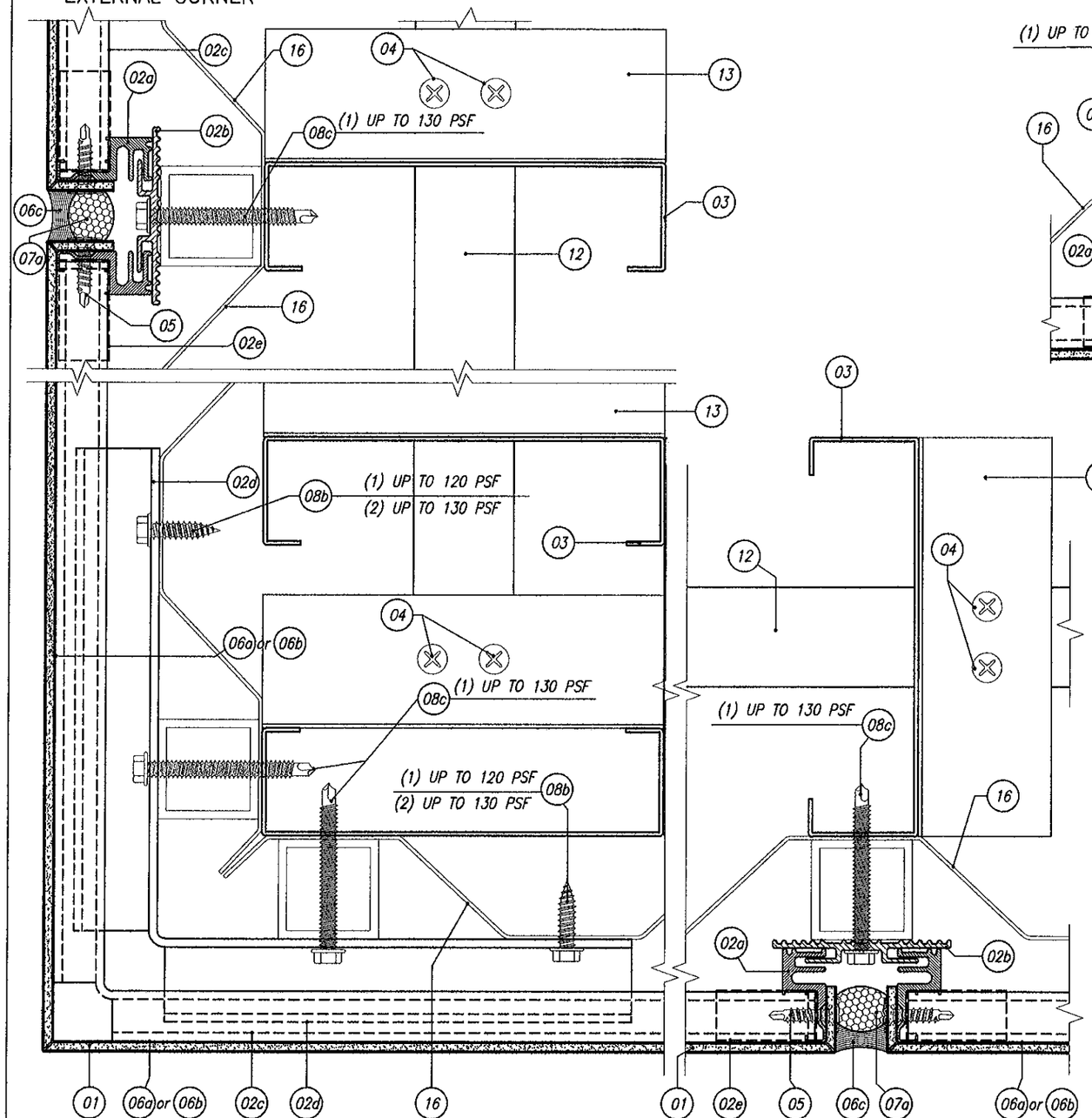

REYNOBOND® PE/FR w/ BACKER SUPPORT
7.2" RIB PANEL 20ga
INTERNAL CORNER

4 SECTION DETAIL TOP / BOTTOM

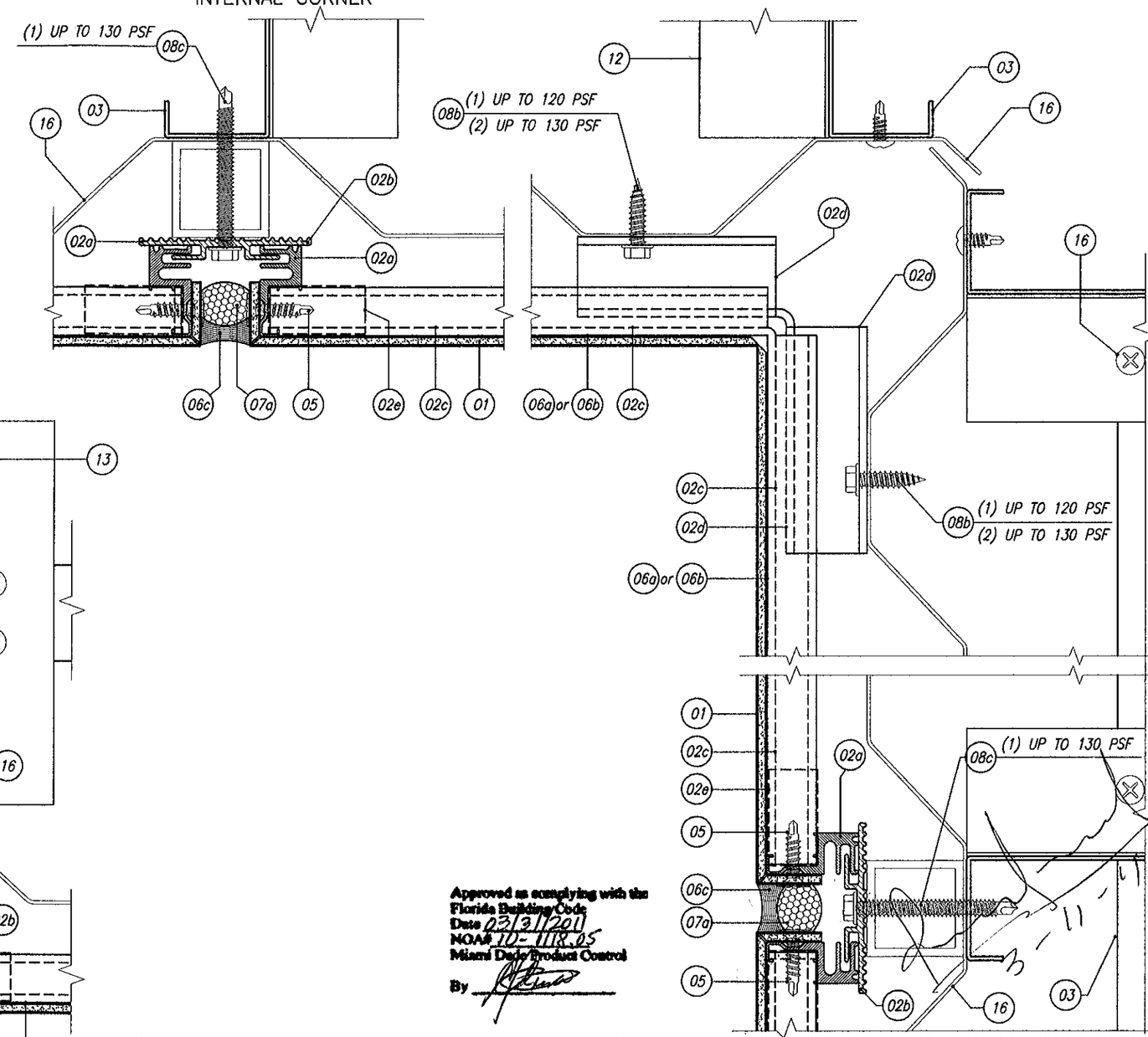

Approved as complying with the Florida Building Code
Date 03/31/2011
NOA# 10-1118.05
Miami Dade Product Control
By

Alcoa Architectural Products 50 Industrial Boulevard Eastman, Georgia 31023 USA Tel: (478) 374 6871 ALCOA	SUBMITTAL DWG. DWG. NO. MD-005 MIAMI DADE BUILDING CODE	DATE: 03-07-11 REVISION: 02
CONFIDENTIAL AND PROPRIETARY PROPERTY OF ALCOA ARCHITECTURAL PRODUCTS Which May Be Used Only For Its Benefit And Which May Not Be Reproduced Or Disclosed To Others. This Document And All Copies Must Be Returned On Demand.	REYNOBOND® PE/FR w/ BACKER SUPPORT OVER 7.2" RIB PANEL 20ga ALL BUILDING CONDITIONS - LARGE MISSIL IMPACT DRY AND WET SEAL	SHEET: 07 OF 21

REYNOBOND® PE/FR w/BACKER SUPPORT
OVER CMU
EXTERNAL CORNER

3 SECTION DETAIL
TOP / BOTTOM

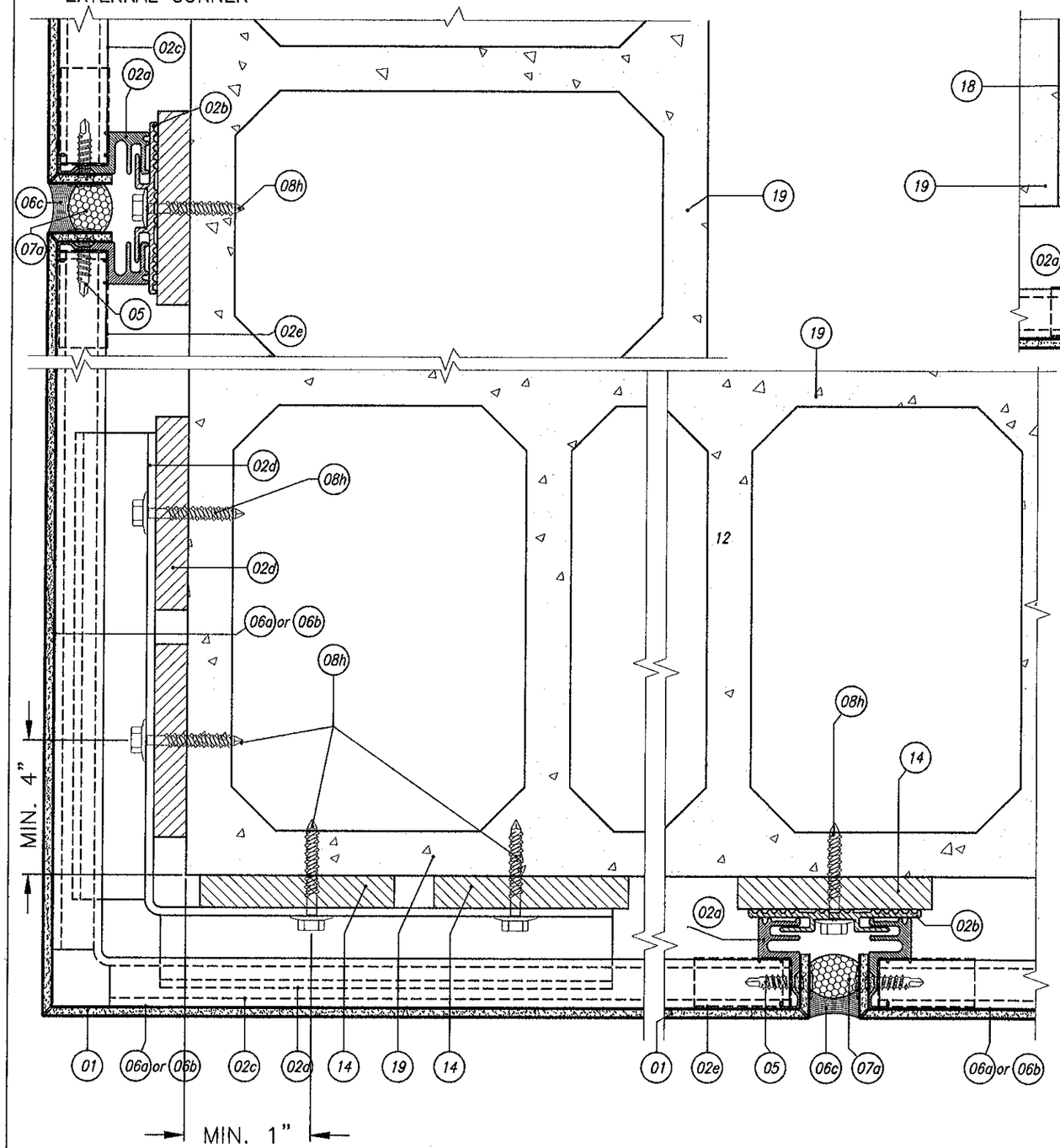

SEE NOTE 8h B.O.M.

REYNOBOND® PE/FR w/BACKER SUPPORT
OVER CMU
INTERNAL CORNER

4 SECTION DETAIL
TOP / BOTTOM

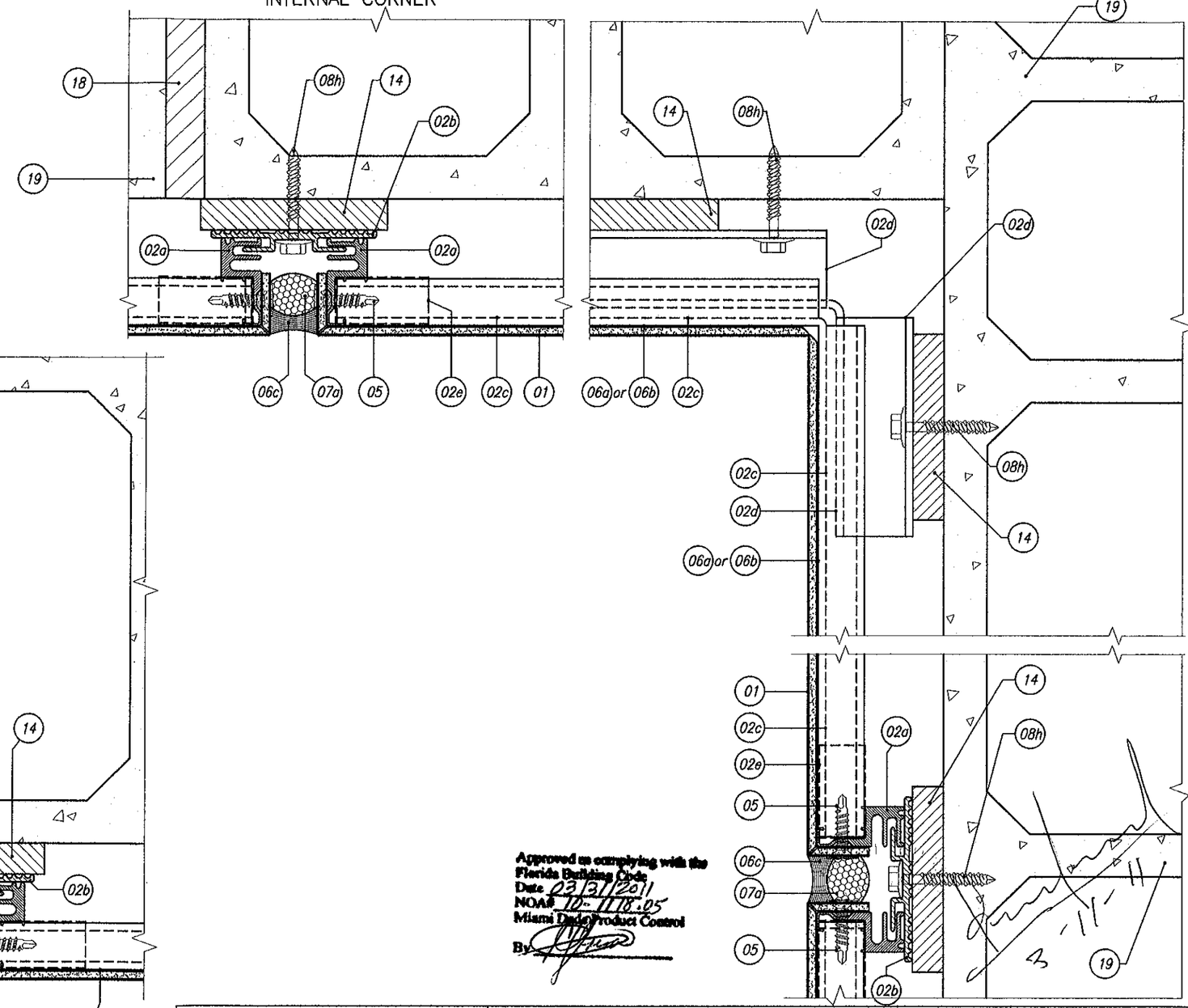

Approved as complying with the
Florida Building Code
Date 03/31/2011
NOA# 10-1118.05
Miami Dade Product Control
By

Alcoa Architectural Products 50 Industrial Boulevard Eastman, Georgia 31023 USA Tel: (478) 374 6871 ALCOA	SUBMITTAL DWG. DWG. NO. MD-005 MIAMI DADE BUILDING CODE	DATE: 03-07-11 REVISION: 02
CONFIDENTIAL AND PROPRIETARY PROPERTY OF ALCOA ARCHITECTURAL PRODUCTS Which May Be Used Only For Its Benefit And Which May Not Be Reproduced Or Disclosed To Others. This Document And All Copies Must Be Returned On Demand.	REYNOBOND® wPE/FR LARGE MISSIL IMPACT BACKER SUPPORTS: CMU or CONCRETE ALL BUILDING CONDITIONS DRY OR WET SEAL	SHEET: 08 OF 21

REYNOBOND® PE/FR w/BACKER SUPPORTS: CMU, 7.2" RIB PANEL 20ga, 5/8" PLYWOOD
COLUMN COVER

5 SECTION DETAIL
TOP / BOTTOM

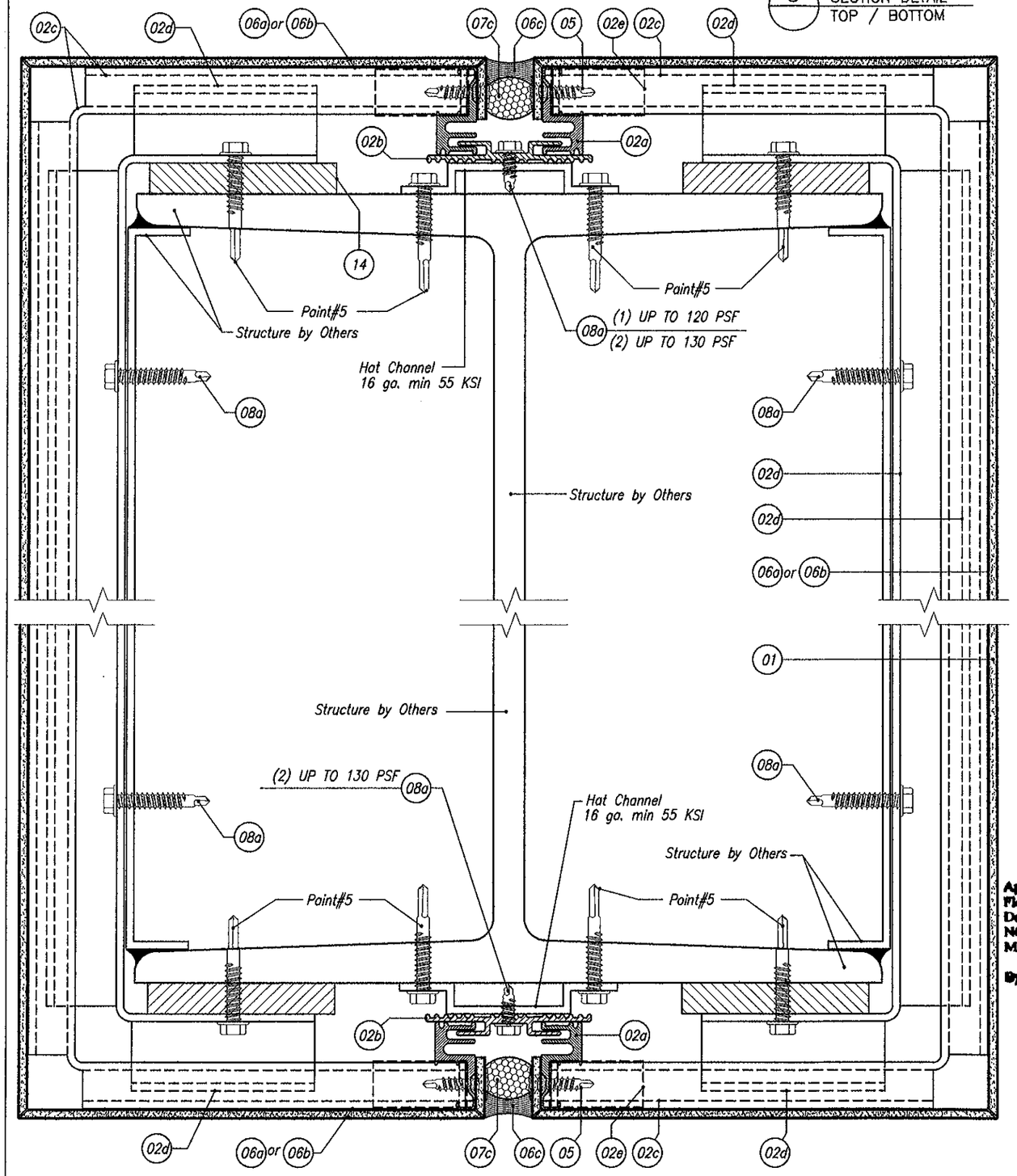

REYNOBOND® PE/FR w/BACKER SUPPORTS: CMU, 7.2" RIB PANEL 20ga, 5/8" PLYWOOD
CURVED CONVEX

6 SECTION DETAIL
TOP / BOTTOM

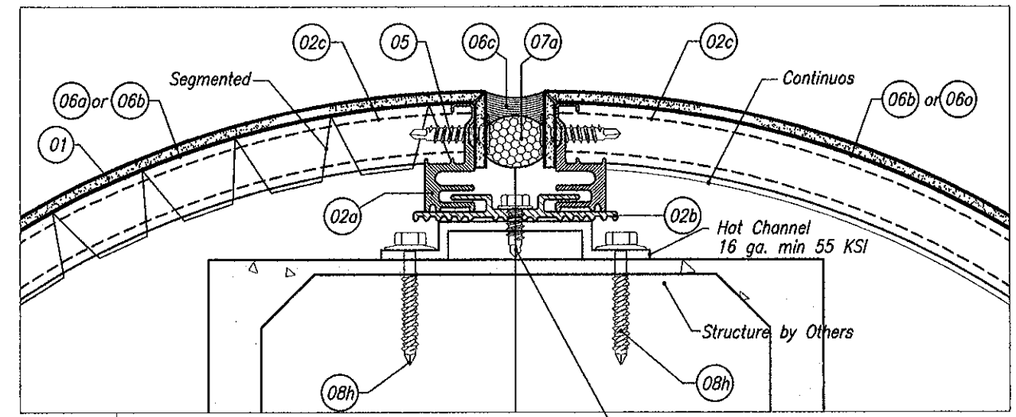

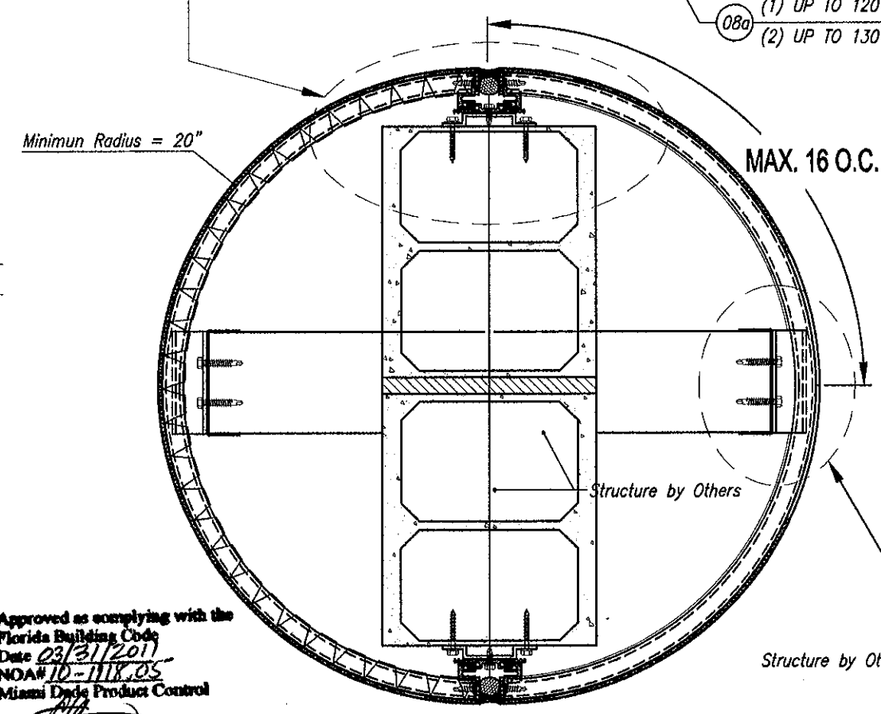

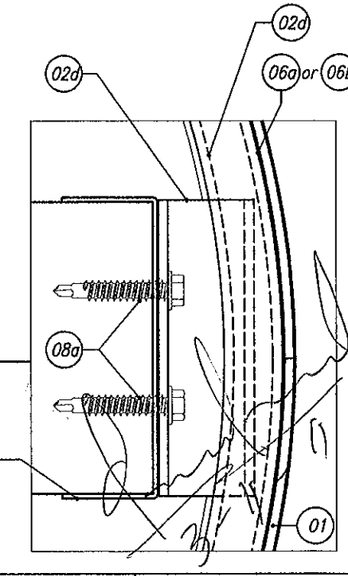

Approved as complying with the
Florida Building Code
Date 03/31/2011
NOA# 10-1118.05
Miami Dade Product Control
By

Alcoa Architectural Products 50 Industrial Boulevard Eastman, Georgia 31023 USA Tel: (478) 374 6871 ALCOA	SUBMITTAL DWG. DWG. NO. MD-006 MIAMI DADE BUILDING CODE	DATE: 03-07-11 REVISION: 02
CONFIDENTIAL AND PROPRIETARY PROPERTY OF ALCOA ARCHITECTURAL PRODUCTS Which May Be Used Only For Its Benefit And Which May Not Be Reproduced Or Disclosed To Others. This Document And All Copies Must Be Returned On Demand.	REYNOBOND® PE/FR LARGE MISSILE IMPACT BACKER SUPPORTS: CMU, 7.2" RIB PANEL 20ga, 5/8" PLYWOOD. ALL BUILDING CONDITIONS DRY AND WET SEAL	SHEET: 09 OF 21

REYNOBOND® PE/FR w/ BACKER SUPPORT OVER CMU
COLUMN COVER

5 SECTION DETAIL TOP / BOTTOM

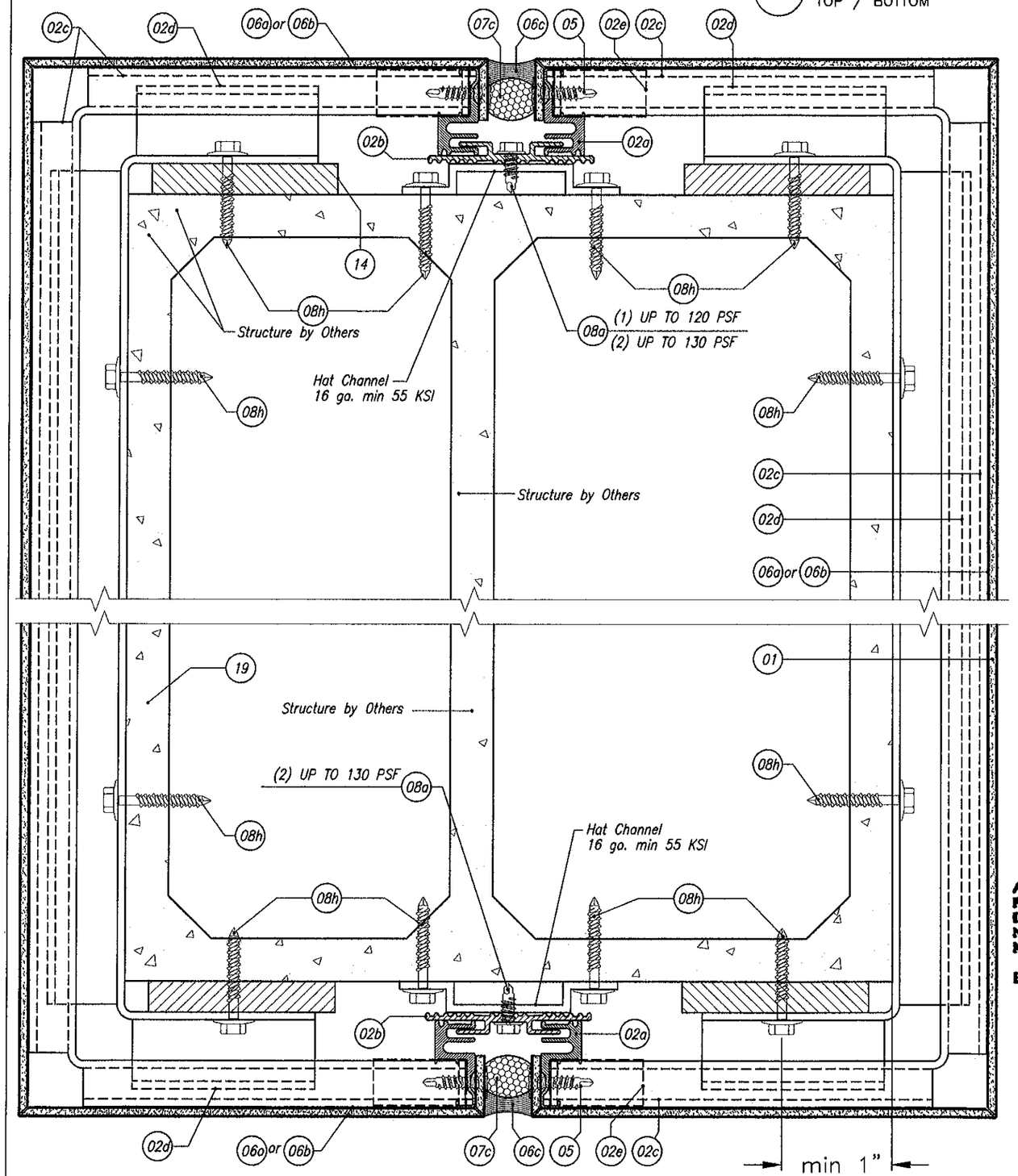

REYNOBOND® PE/FR w/ BACKER SUPPORT OVER CMU
CURVED CONCAVE

7 SECTION DETAIL TOP / BOTTOM

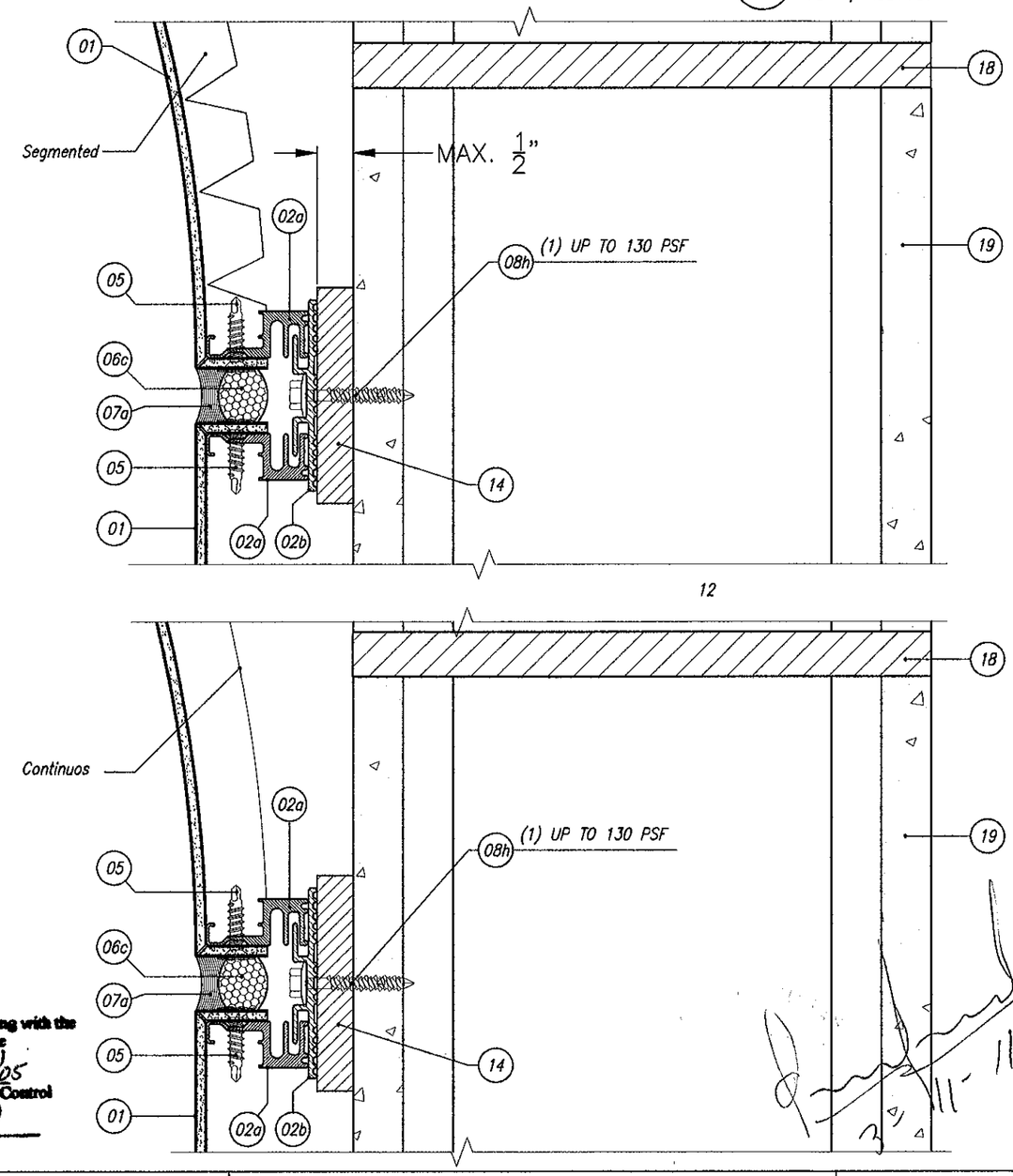

Approved as complying with the Florida Building Code
Date 03/31/2011
NOA# 10-1118.05
Miami Dade Product Control
By

Alcoa Architectural Products 50 Industrial Boulevard Eastman, Georgia 31023 USA Tel: (478) 374 6871 ALCOA	SUBMITTAL DWG. DWG. NO. MD–006 MIAMI DADE BUILDING CODE	DATE: 03–07–11 REVISION: 02
CONFIDENTIAL AND PROPRIETARY PROPERTY OF ALCOA ARCHITECTURAL PRODUCTS Which May Be Used Only For Its Benefit And Which May Not Be Reproduced Or Disclosed To Others. This Document And All Copies Must Be Returned On Demand.	REYNOBOND® PE/FR LARGE MISSILE IMPACT BACKER SUPPORTS: CMU, 7.2" RIB PANEL 20ga, 5/8" PLYWOOD. ALL BUILDING CONDITIONS DRY AND WET SEAL	SHEET: 10 OF 21

REYNOBOND® PE/FR w/BACKER SUPPORT OVER 7.2" RIB PANEL 20ga
CURVED CONCAVE

7 SECTION DETAIL
LEFT / RIGTH

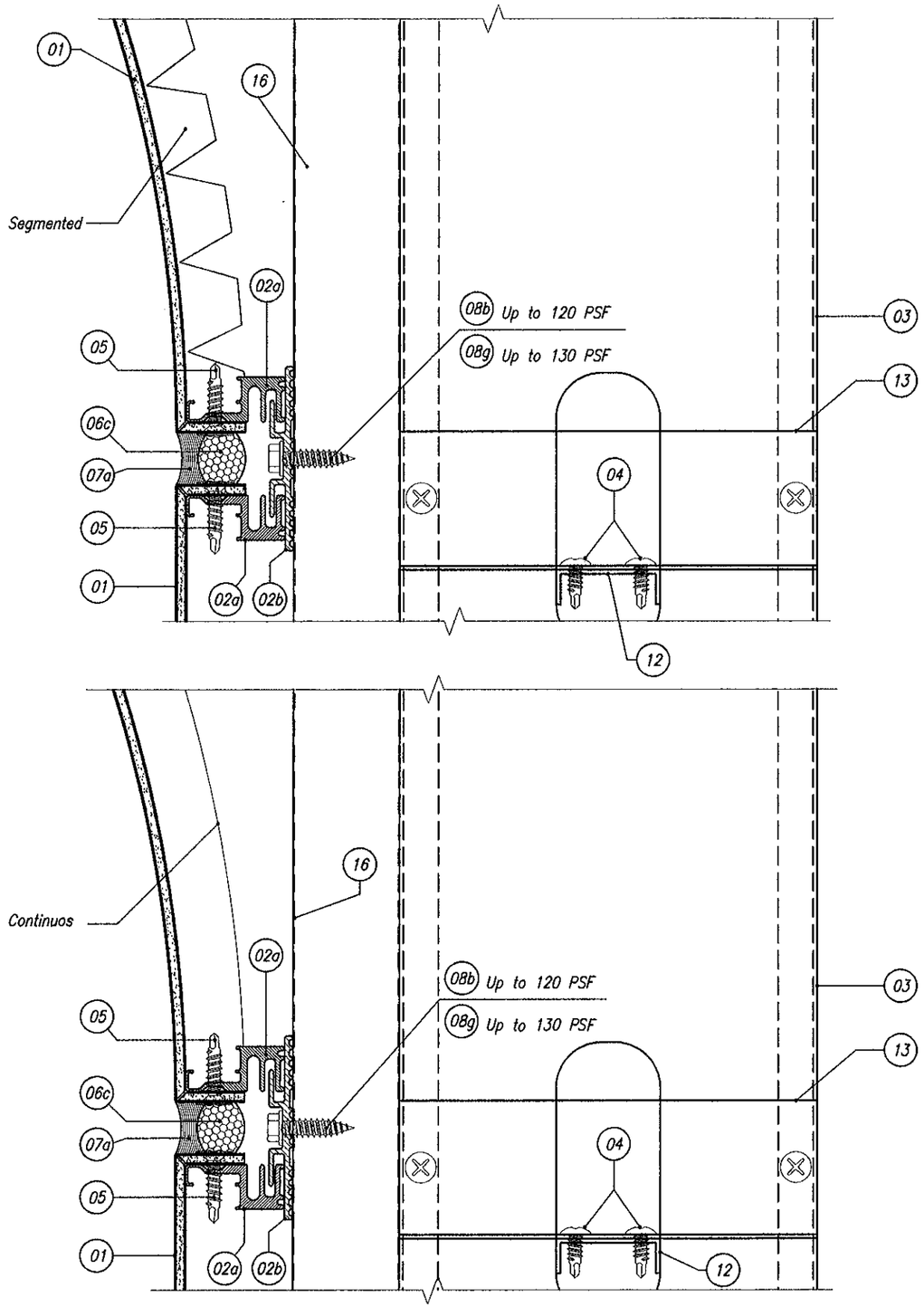

REYNOBOND® PE/FR w/BACKER SUPPORT OVER 7.2" RIB PANEL 20ga
PARAPET W/ FLASHING

8 SECTION DETAIL
A RIGTH / LEFT

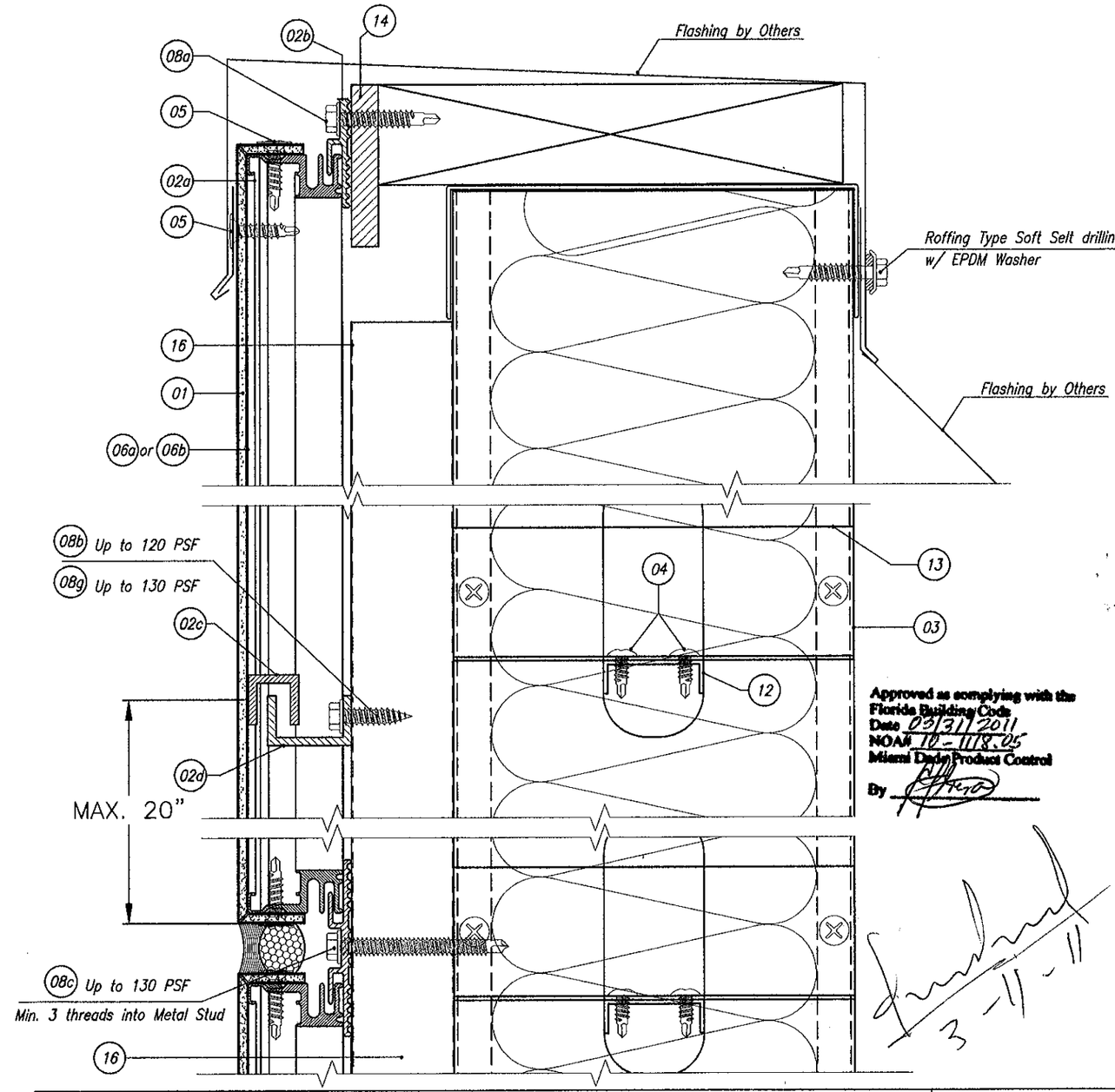

Approved as complying with the Florida Building Code
Date 03/31/2011
NOA# 10-1118.05
Miami Dade Product Control
By

3-11-11

Alcoa Architectural Products 50 Industrial Boulevard Eastman, Georgia 31023 USA Tel: (478) 374 6871 ALCOA	SUBMITTAL DWG. DWG. NO. MD-007 MIAMI DADE BUILDING CODE	DATE: 03-07-11 REVISION: 02
CONFIDENTIAL AND PROPRIETARY PROPERTY OF ALCOA ARCHITECTURAL PRODUCTS Which May Be Used Only For Its Benefit And Which May Not Be Reproduced Or Disclosed To Others. This Document And All Copies Must Be Returned On Demand.	REYNOBOND® PE/FR LARGE MISSILE IMPACT BACKER SUPPORTS: CMU, 7.2" RIB PANEL 20ga, 5/8" PLYWOOD. ALL BUILDING CONDITIONS DRY AND WET SEAL	SHEET: 11 OF 21

REYNOBOND® PE/FR w/BACKER SUPPORT OVER CMU
PARAPET W/ FLASHING

8/A SECTION DETAIL RIGTH / LEFT

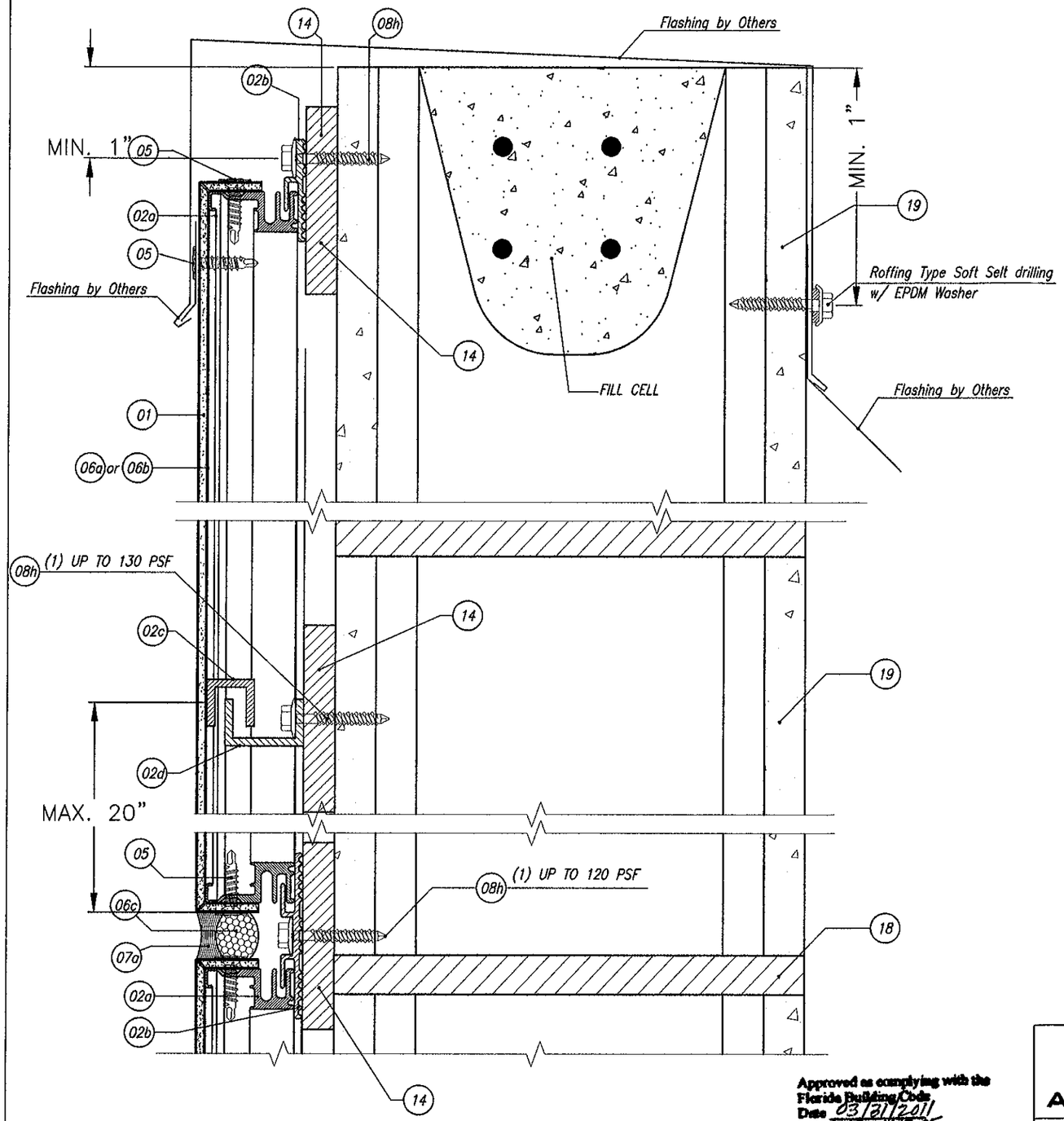

Approved as complying with the
Florida Building Code
Date 03/21/2011
NOA# 10-1118.05
Miami Dade Product Control
By

REYNOBOND® PE/FR w/BACKER SUPPORT OVER 7.2" RIB PANEL 20ga
PARAPET W/ REYNOBOND

8/B SECTION DETAIL RIGTH / LEFT

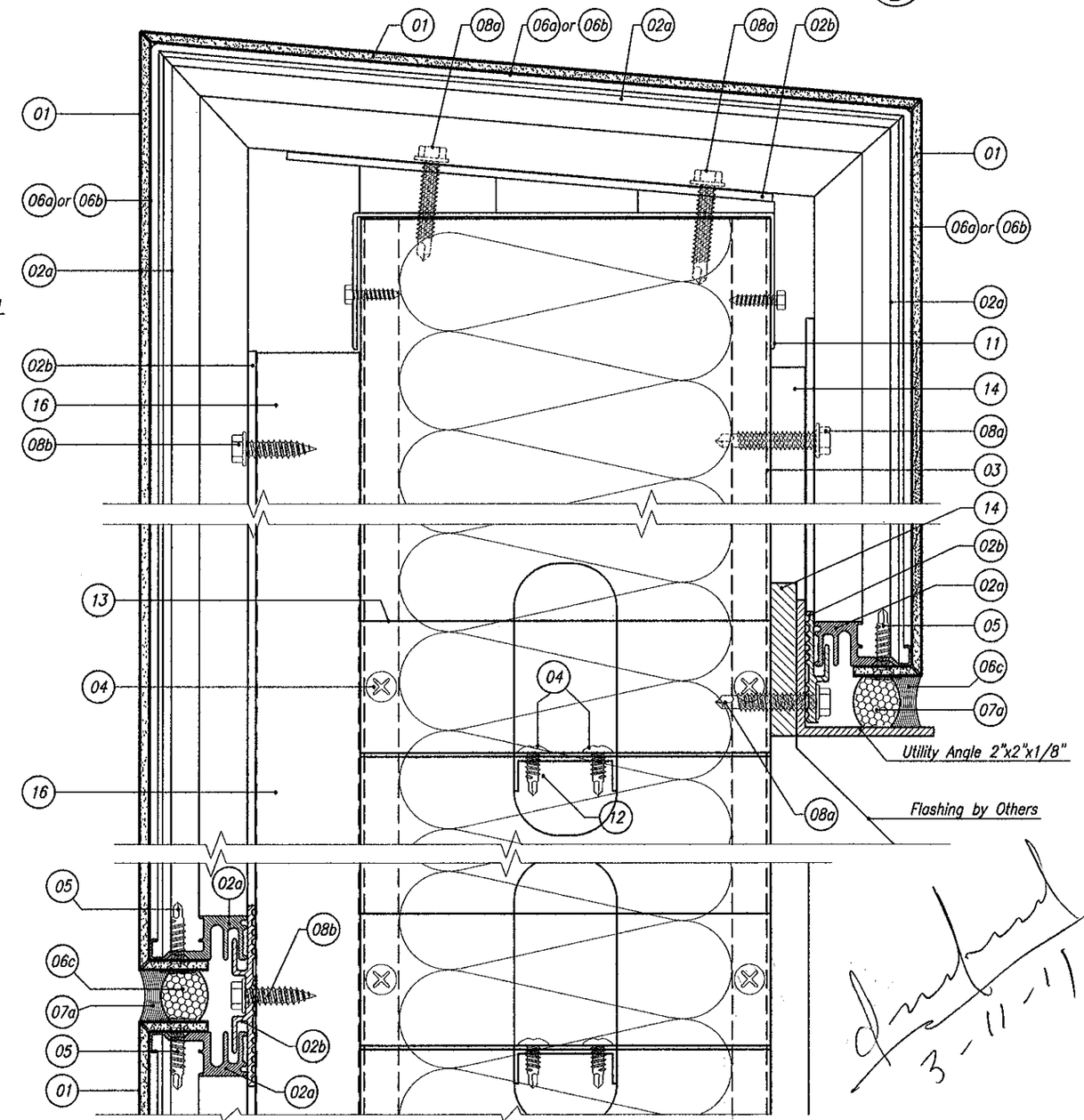

3-11-11

ALCOA **Alcoa Architectural Products** 50 Industrial Boulevard Eastman, Georgia 31023 USA Tel: (478) 374 6871	SUBMITTAL DWG. DWG. NO. MD-008 MIAMI DADE BUILDING CODE	DATE: 03-07-11 REVISION: 02
CONFIDENTIAL AND PROPRIETARY PROPERTY OF ALCOA ARCHITECTURAL PRODUCTS Which May Be Used Only For Its Benefit And Which May Not Be Reproduced Or Disclosed To Others. This Document And All Copies Must Be Returned On Demand.	REYNOBOND® PE/FR LARGE MISSILE IMPACT BACKER SUPPORTS: CMU, 7.2" RIB PANEL 20ga, 5/8" PLYWOOD. ALL BUILDING CONDITIONS DRY AND WET SEAL	SHEET: 12 OF 21

REYNOBOND® PE/FR w/BACKER SUPPORT OVER CMU PARAPET W/ REYNOBOND

8/B SECTION DETAIL RIGTH / LEFT

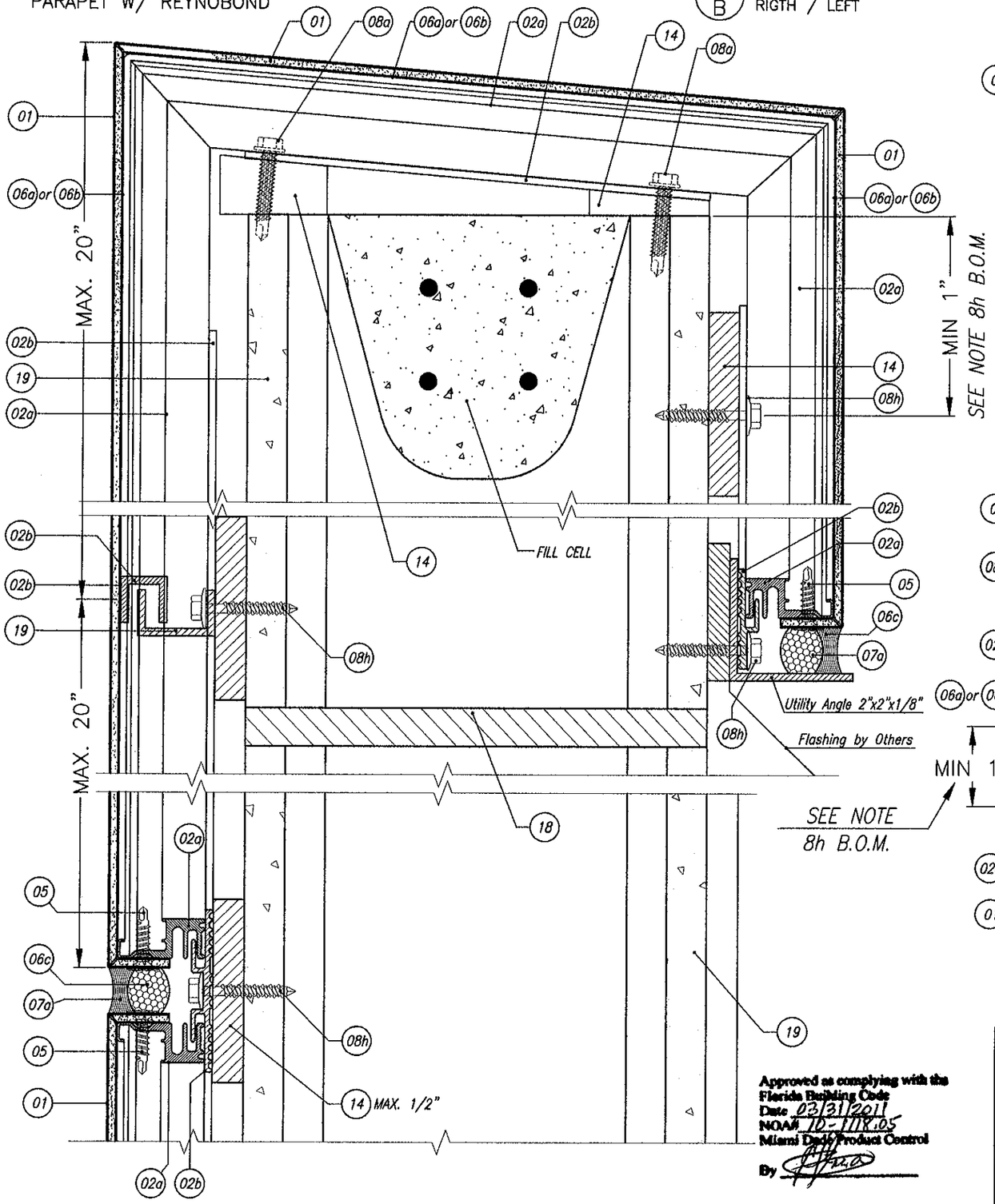

Approved as complying with the Florida Building Code
Date 03/31/2011
NOA# 10-1118.05
Miami Dade Product Control
By

REYNOBOND® PE/FR w/BACKER SUPPORT OVER CMU OR CONCRETE SOFFIT

9 SECTION DETAIL LEFT / RIGTH

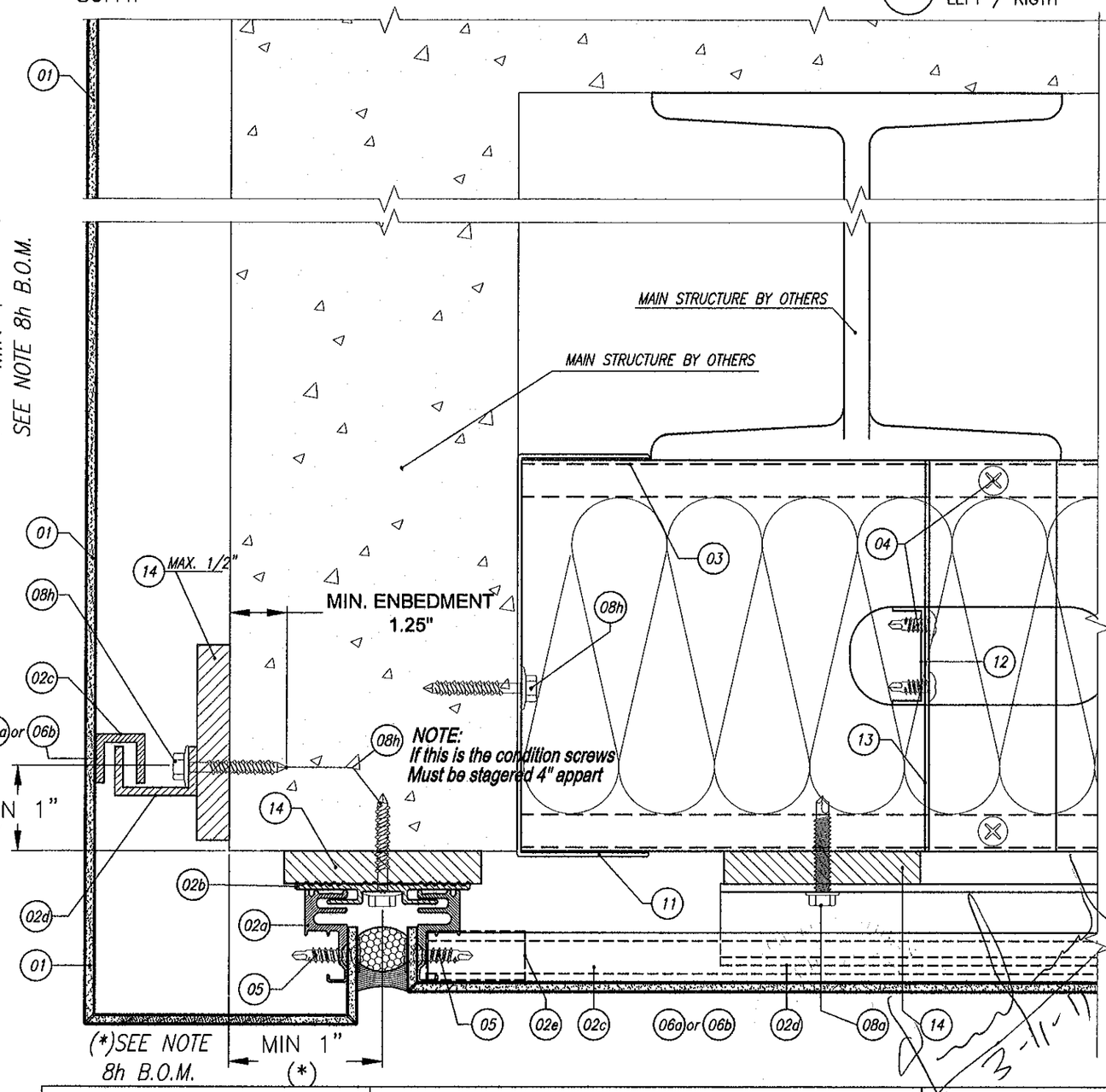

Alcoa Architectural Products 50 Industrial Boulevard Eastman, Georgia 31023 USA Tel: (478) 374 6871 ALCOA	SUBMITTAL DWG. DWG. NO. MD-008 MIAMI DADE BUILDING CODE	DATE: 03-07-11 REVISION: 02
CONFIDENTIAL AND PROPRIETARY PROPERTY OF ALCOA ARCHITECTURAL PRODUCTS Which May Be Used Only For Its Benefit And Which May Not Be Reproduced Or Disclosed To Others. This Document And All Copies Must Be Returned On Demand.	REYNOBOND® PE/FR LARGE MISSILE IMPACT BACKER SUPPORTS: CMU, 7.2" RIB PANEL 20ga, 5/8" PLYWOOD. ALL BUILDING CONDITIONS DRY AND WET SEAL	SHEET: 13 OF 21

REYNOBOND® PE/FR w/BACKER SUPPORT OVER 7.2" RIB PANEL 20ga
SOFFIT

9 SECTION DETAIL
LEFT / RIGTH

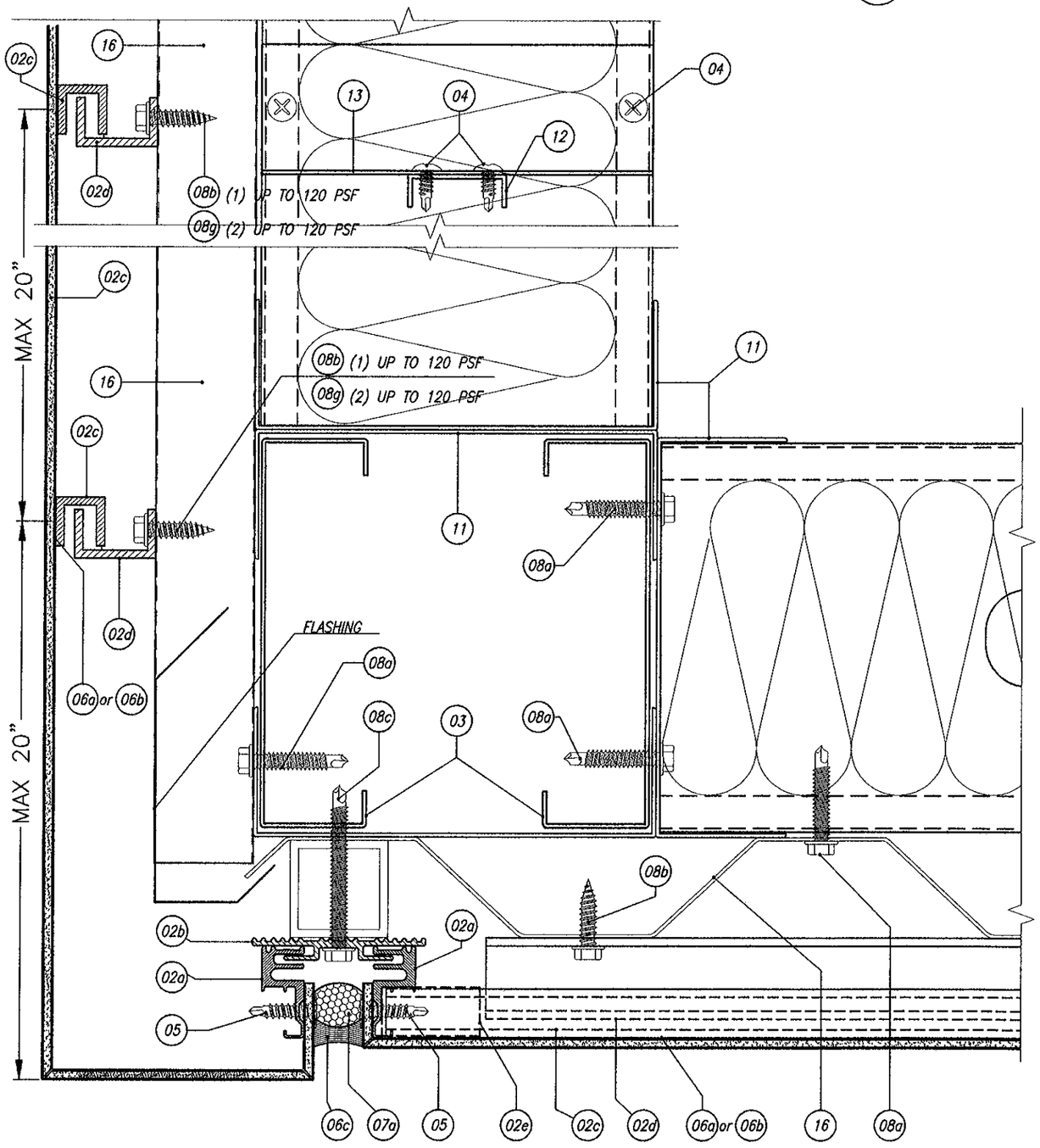

REYNOBOND® PE/FR w/BACKER SUPPORT OVER 7.2" RIB PANEL 20ga
RECESS OPENING

10 SECTION DETAIL
TOP / BOTTOM

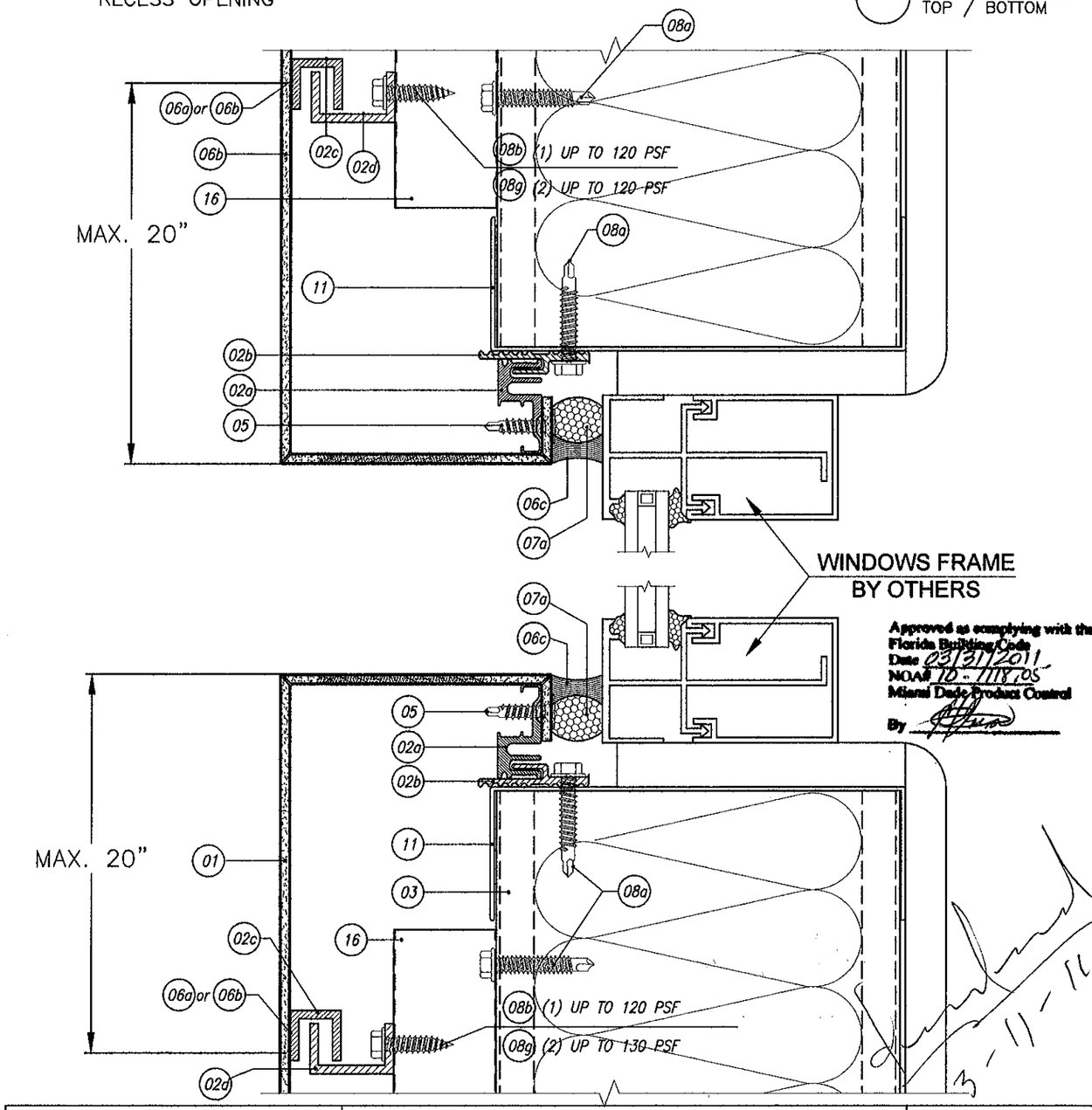

Approved as complying with the Florida Building Code
Date 03/31/2011
NOA# 10-1118.05
Miami Dade Product Control
By

Alcoa Architectural Products 50 Industrial Boulevard Eastman, Georgia 31023 USA Tel: (478) 374 6871 ALCOA	SUBMITTAL DWG. DWG. NO. MD-009 MIAMI DADE BUILDING CODE	DATE: 03-07-11 REVISION: 02
CONFIDENTIAL AND PROPRIETARY PROPERTY OF ALCOA ARCHITECTURAL PRODUCTS Which May Be Used Only For Its Benefit And Which May Not Be Reproduced Or Disclosed To Others. This Document And All Copies Must Be Returned On Demand.	REYNOBOND® PE/FR LARGE MISSILE IMPACT BACKER SUPPORTS: CMU, 7.2" RIB PANEL 20ga, 5/8" PLYWOOD. ALL BUILDING CONDITIONS DRY AND WET SEAL	SHEET: 14 OF 21

REYNOBOND® PE/FR w/BACKER SUPPORT OVER CMU
RECESS OPENING

10 SECTION DETAIL TOP / BOTTOM

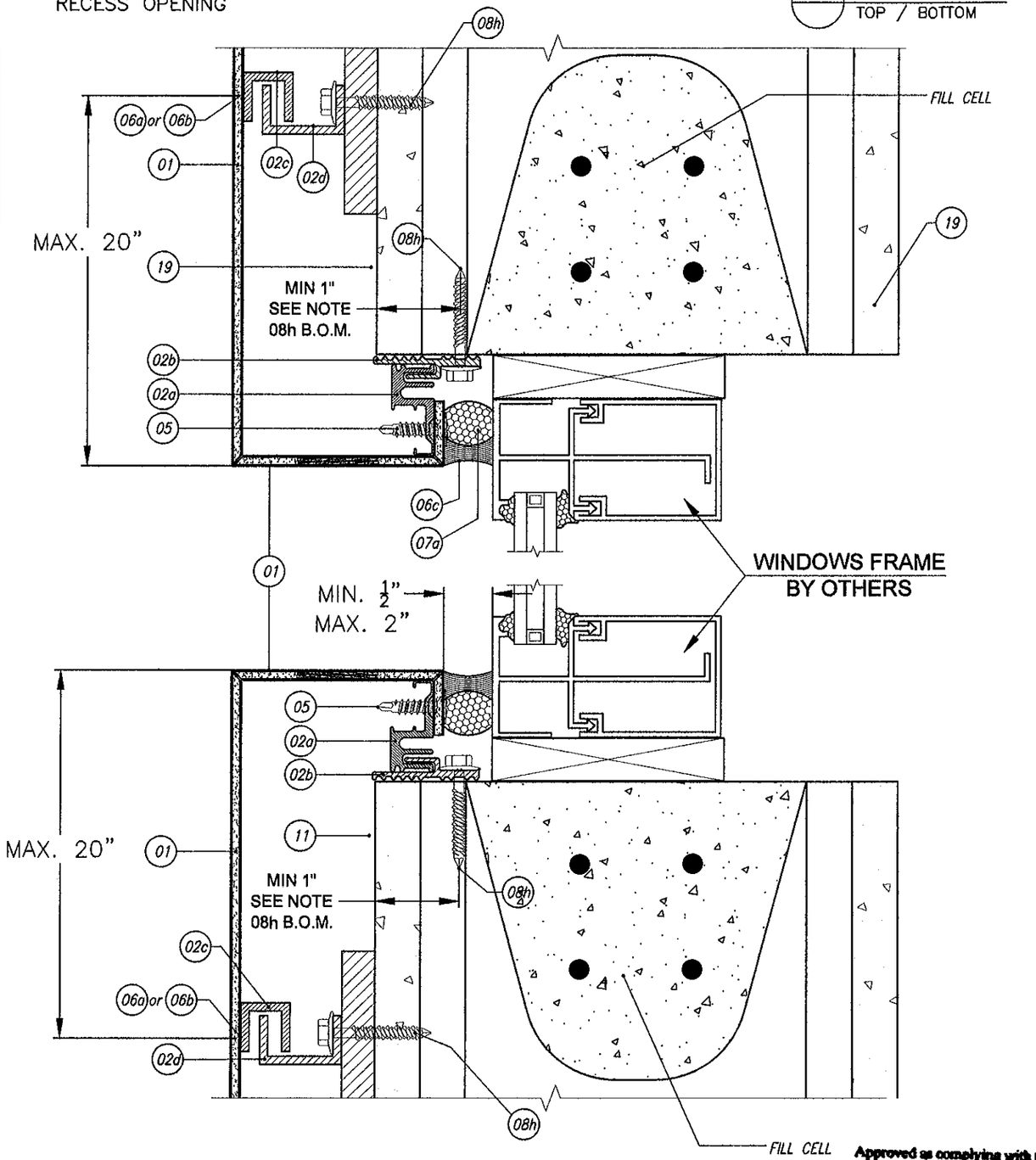

REYNOBOND® PE/FR w/BACKER SUPPORT OVER 7.2" RIB PANEL 20ga
FLASH OPENING

11 SECTION DETAIL TOP / BOTTOM

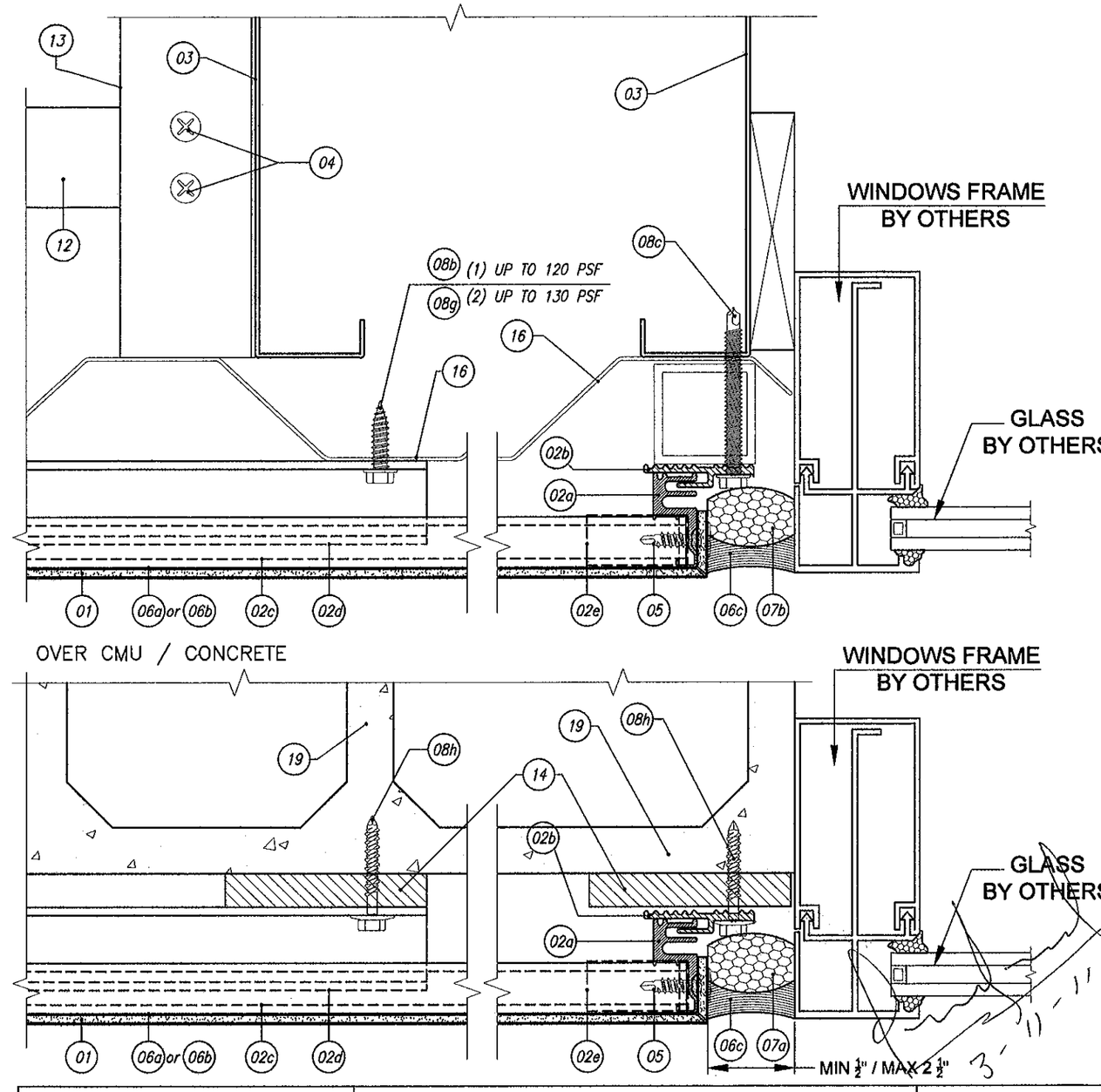

Approved as complying with the Florida Building Code
Date 03/31/2011
NOA# 10-1118.05
Miami Dade Product Control
By

Alcoa Architectural Products 50 Industrial Boulevard Eastman, Georgia 31023 USA Tel: (478) 374 6871 ALCOA	SUBMITTAL DWG. DWG. NO. MD-009 MIAMI DADE BUILDING CODE	DATE: 03-07-11 REVISION: 02
CONFIDENTIAL AND PROPRIETARY PROPERTY OF ALCOA ARCHITECTURAL PRODUCTS Which May Be Used Only For Its Benefit And Which May Not Be Reproduced Or Disclosed To Others. This Document And All Copies Must Be Returned On Demand.	REYNOBOND® PE/FR LARGE MISSILE IMPACT BACKER SUPPORTS: CMU, 7.2" RIB PANEL 20ga, 5/8" PLYWOOD. ALL BUILDING CONDITIONS DRY AND WET SEAL	SHEET: 15 OF 21

REYNOBOND® PE/FR w/BACKER SUPPORT OVER CMU
CANOPY (SUPERIOR)

12 SECTION DETAIL
LEFT / RIGTH

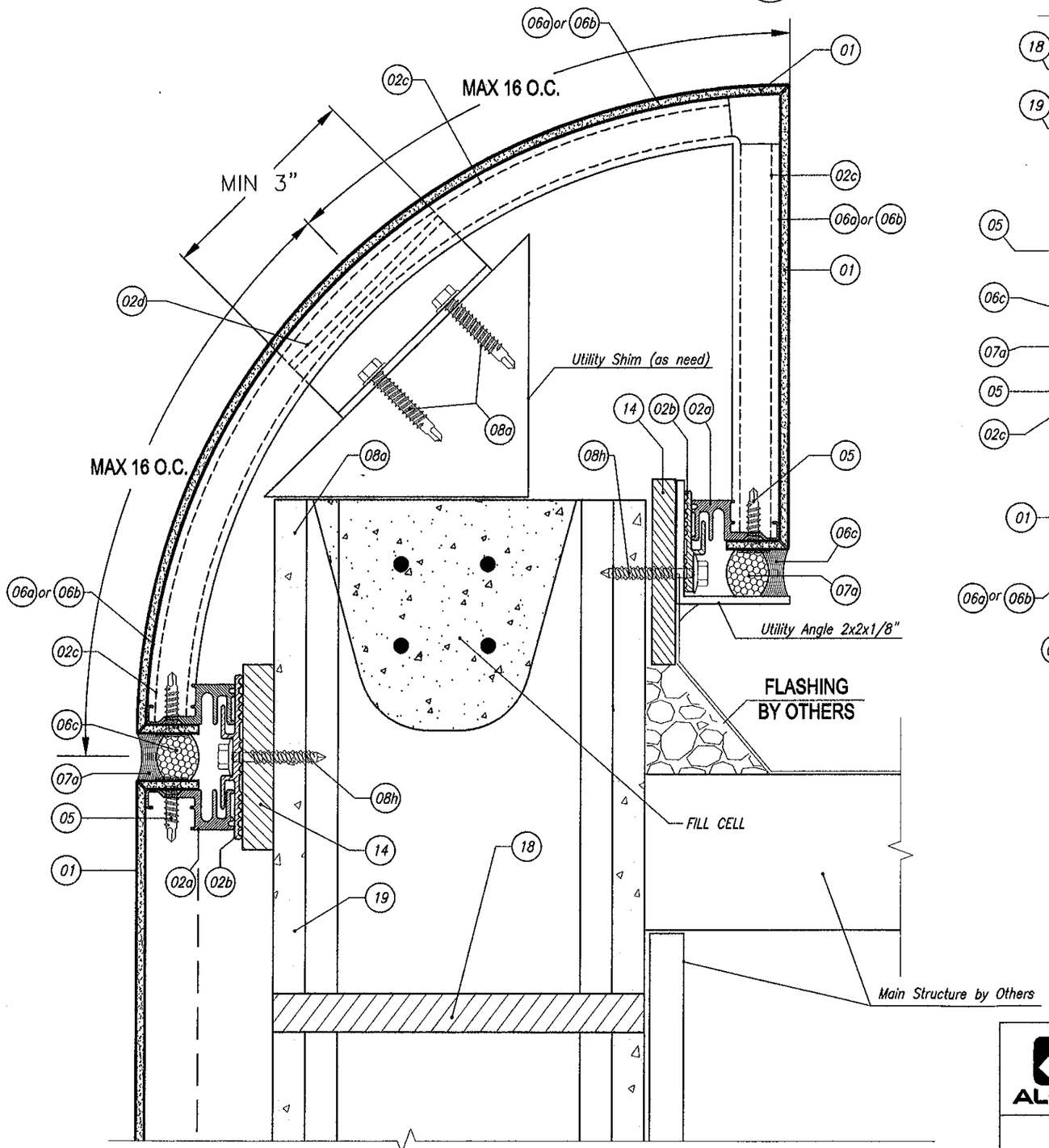

REYNOBOND® PE/FR w/BACKER SUPPORT OVER CMU
CANOPY (INFERIOR)

12 SECTION DETAIL
LEFT / RIGTH

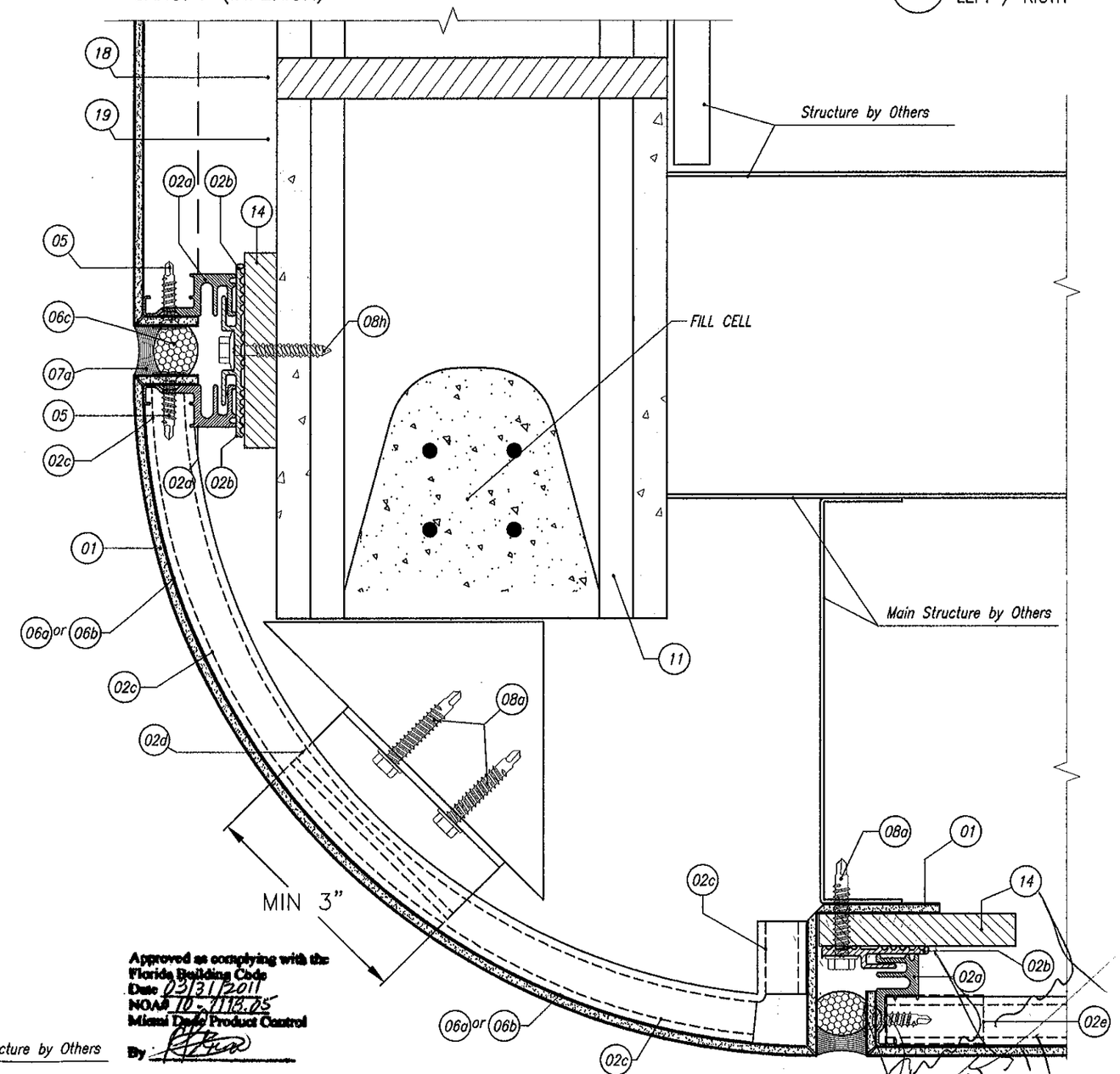

Approved as complying with the
Florida Building Code
Date 03/31/2011
NOA# 10-1113.05
Miami Dade Product Control
By:

Alcoa Architectural Products 50 Industrial Boulevard Eastman, Georgia 31023 USA Tel: (478) 374 6871 ALCOA	SUBMITTAL DWG. DWG. NO. MD-010 MIAMI DADE BUILDING CODE	DATE: 03-07-11 REVISION: 02
CONFIDENTIAL AND PROPRIETARY PROPERTY OF ALCOA ARCHITECTURAL PRODUCTS Which May Be Used Only For Its Benefit And Which May Not Be Reproduced Or Disclosed To Others. This Document And All Copies Must Be Returned On Demand.	REYNOBOND® PE/FR LARGE MISSILE IMPACT BACKER SUPPORTS: CMU, 7.2" RIB PANEL 20ga, 5/8" PLYWOOD. ALL BUILDING CONDITIONS DRY AND WET SEAL	SHEET: 16 OF 21

REYNOBOND® w/ BACKER SUPPORT OVER
PLYWOOD 5/8"
VERTICAL JOINT – 1/2" to 3/4" WET
NOTE: ALL JOINTS APPLY TO ANY BUILDING CONDITION

A SECTION DETAIL TOP / BOTTOM

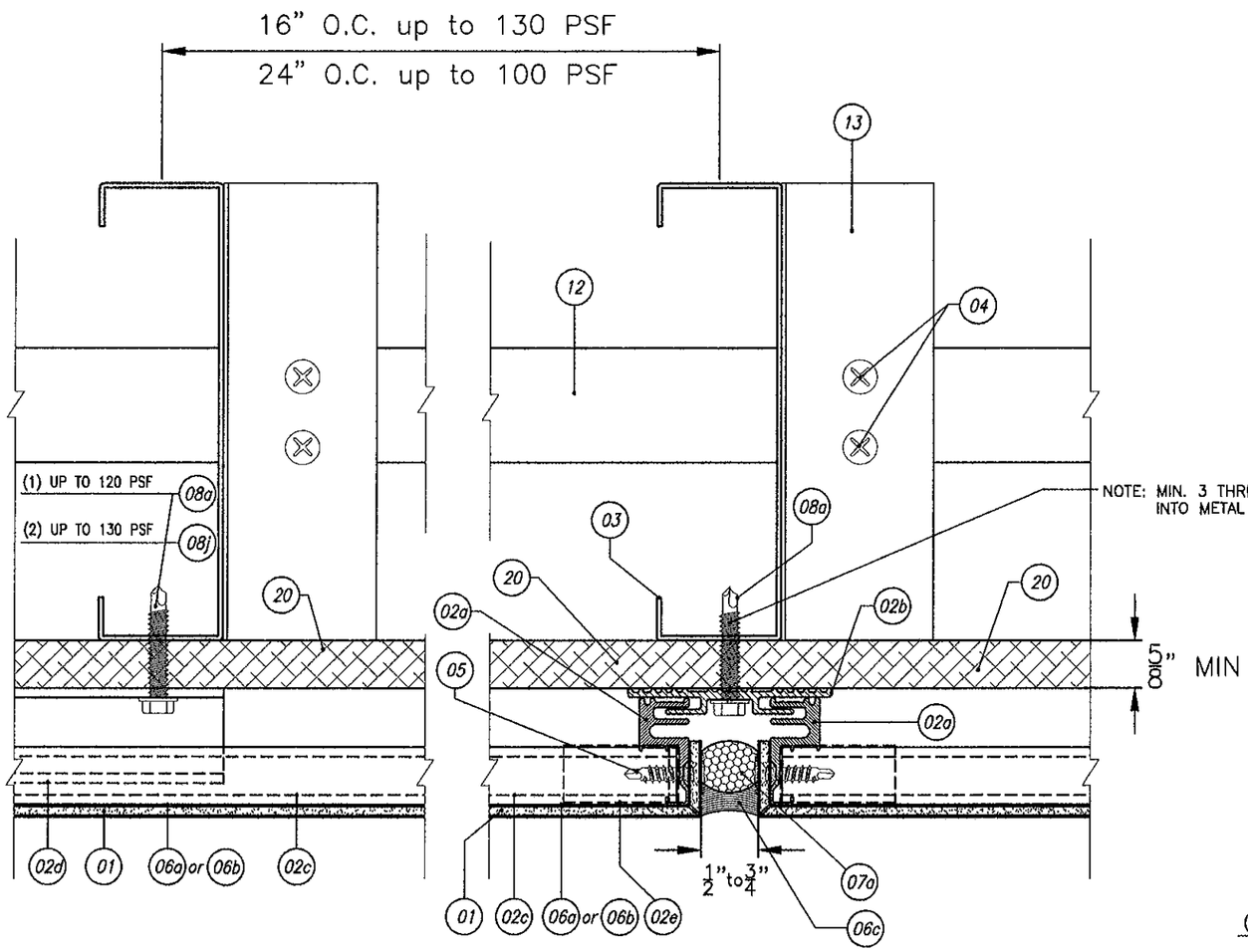

REYNOBOND® w/ BACKER SUPPORT OVER
PLYWOOD 5/8"
VERTICAL JOINT – 1-1/2" DRY
NOTE: ALL JOINTS APPLY TO ANY BUILDING CONDITION

B SECTION DETAIL RIGHT / LEFT

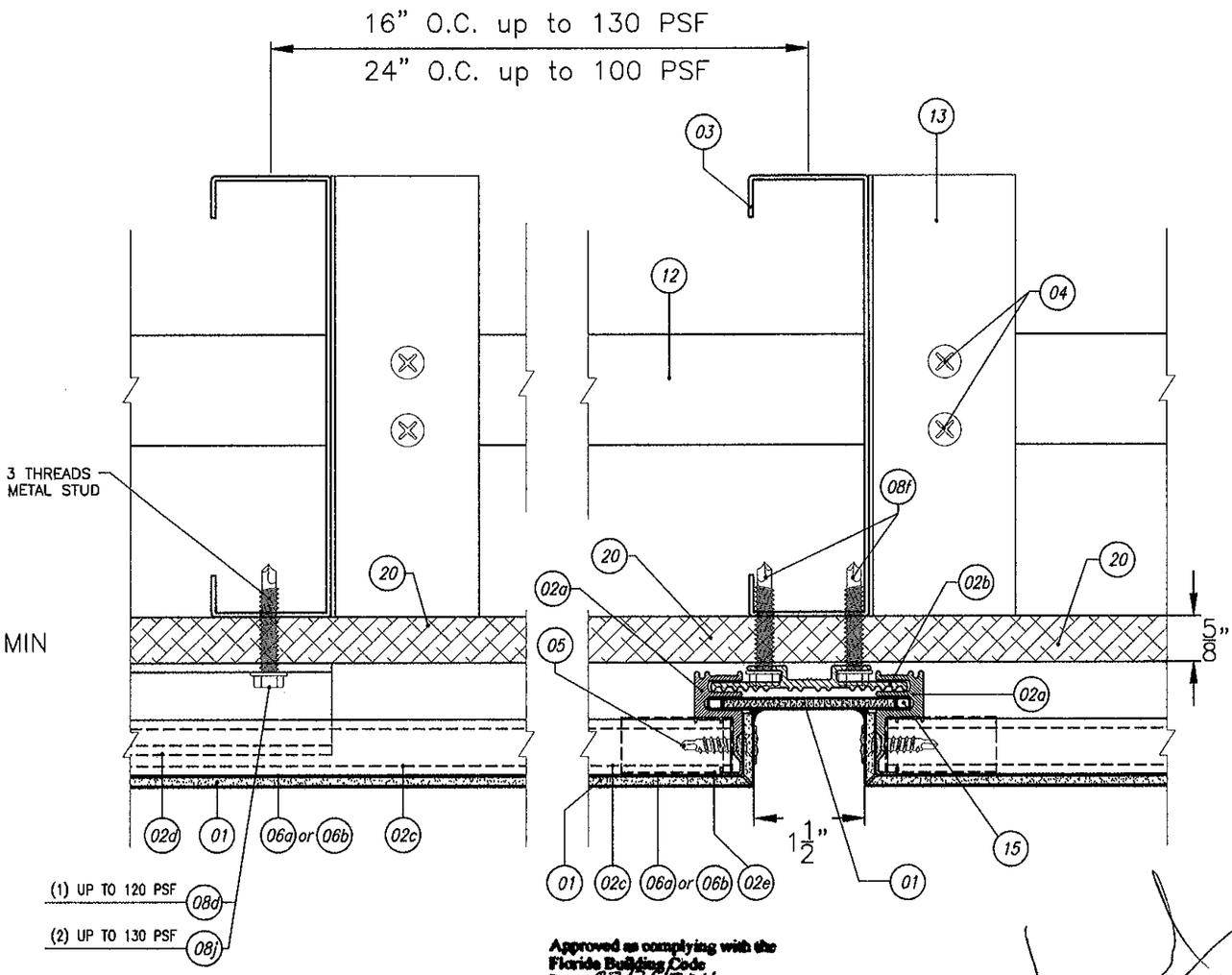

Approved as complying with the
Florida Building Code
Date 03/21/2011
NOA# 10-1118.05
Miami Dade Product Control
By

Alcoa Architectural Products 50 Industrial Boulevard Eastman, Georgia 31023 USA Tel: (478) 374 6871 ALCOA	SUBMITTAL DWG. DWG. NO. MD–012 MIAMI DADE BUILDING CODE	DATE: 03–07–11 REVISION: 02
CONFIDENTIAL AND PROPRIETARY PROPERTY OF ALCOA ARCHITECTURAL PRODUCTS Which May Be Used Only For Its Benefit And Which May Not Be Reproduced Or Disclosed To Others. This Document And All Copies Must Be Returned On Demand.	REYNOBOND® w/ BACKER SUPPORT OVER PLYWOOD 5/8" – LARGE MISSIL IMPACT ALL BUILDING CONDITIONS DRY AND WET SEAL	SHEET: 17 OF 21

REYNOBOND® PE/FR w/BACKER SUPPORTS: CMU, 7.2" RIB PANEL 20ga, 5/8" PLYWOOD.
3D VIEW AND SECTIONS – CORNER (ONLY WET SEAL)

3D VIEW

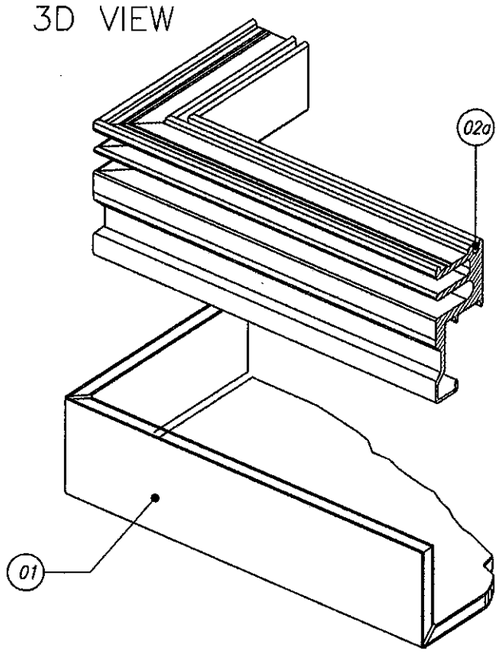

3D VIEW

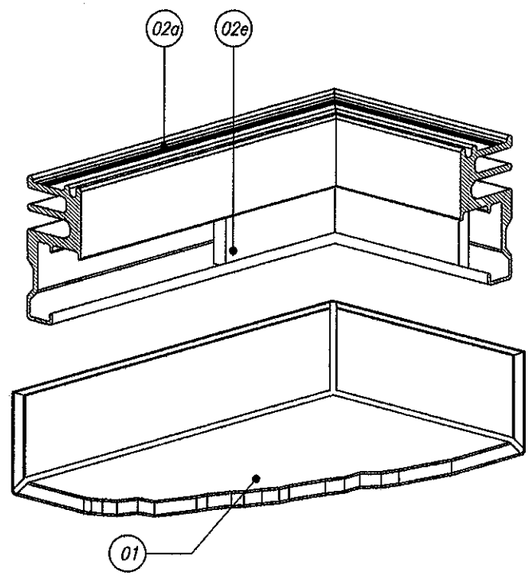

SECTION A

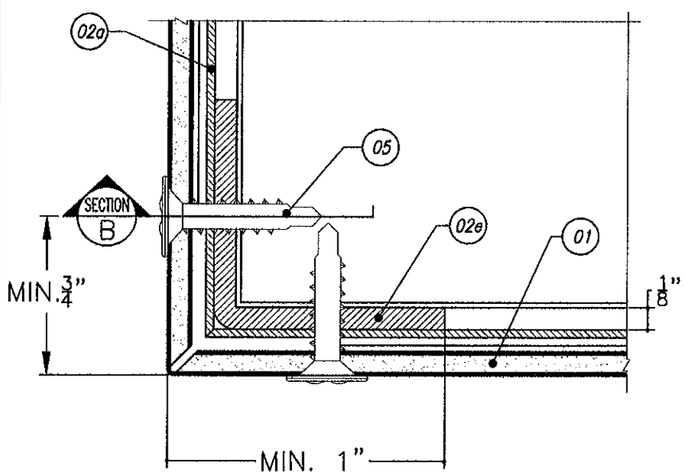

SECTION B

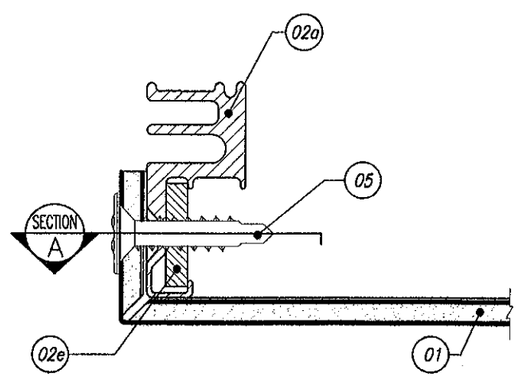

REYNOBOND® PE/FR w/BACKER SUPPORTS: CMU, 7.2" RIB PANEL 20ga, 5/8" PLYWOOD.
3D VIEW AND SECTIONS – CORNER (ONLY DRY SEAL)

3D VIEW

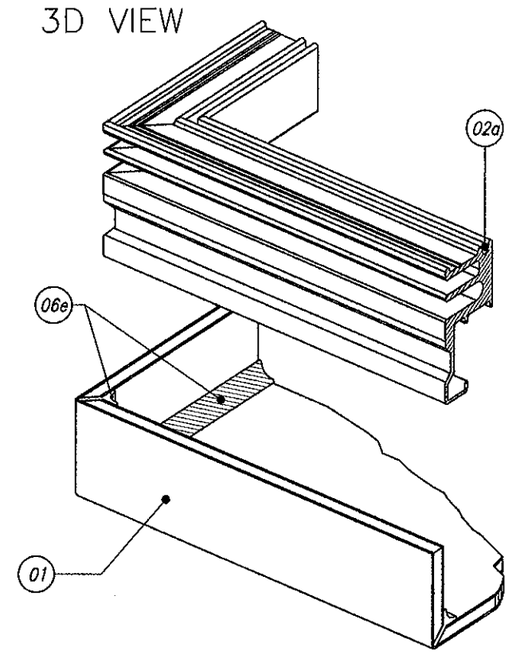

3D VIEW

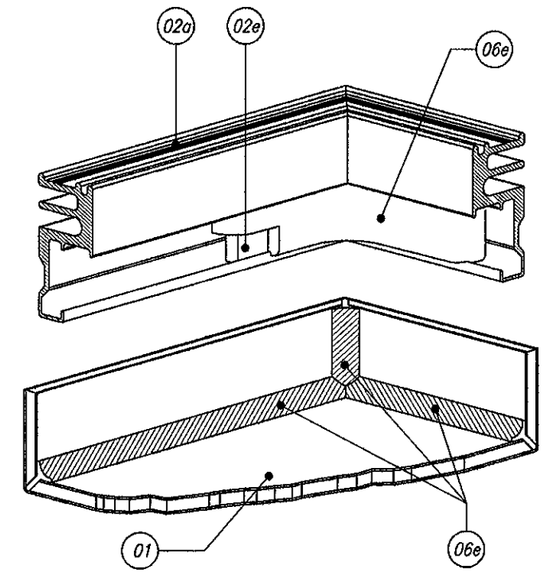

SECTION A

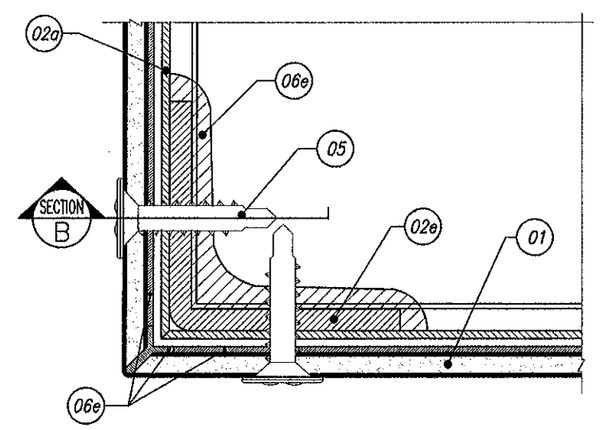

SECTION B

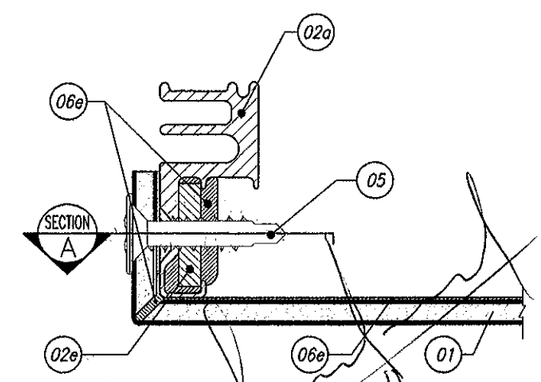

Approved as complying with the Florida Building Code
Date 03/31/2011
NOA# 10-1118.05
Miami Dade Product Control
By

Alcoa Architectural Products 50 Industrial Boulevard Eastman, Georgia 31023 USA Tel: (478) 374 6871 ALCOA	SUBMITTAL DWG. DWG. NO. MD–011 MIAMI DADE BUILDING CODE	DATE: 03–07–11 REVISION: 02
CONFIDENTIAL AND PROPRIETARY PROPERTY OF ALCOA ARCHITECTURAL PRODUCTS Which May Be Used Only For Its Benefit And Which May Not Be Reproduced Or Disclosed To Others. This Document And All Copies Must Be Returned On Demand.	REYNOBOND® PE/FR LARGE MISSILE IMPACT BACKER SUPPORTS: CMU, 7.2" RIB PANEL 20ga, 5/8" PLYWOOD. 3D VIEW, SECTIONS AND CORNER FRAME DETAIL – DRY AND WET SEAL	SHEET: 18 OF 21

REYNOBOND® w/ PE-FR w/BACKER SUPPORTS: CMU, 7.2" RIB PANEL 20ga, PLYWOOD 5/8".

HORIZONTAL SECTION

(A) REYNOBOND® PE/FR w/BACKER SUPPORT OVER CMU or CONCRETE

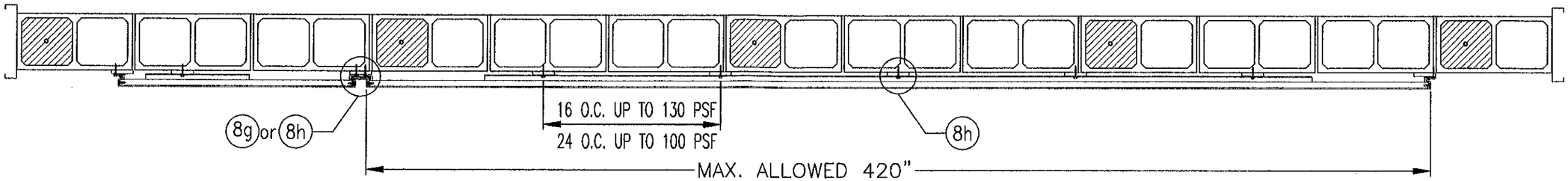

(B) REYNOBOND® PE/FR w/BACKER SUPPORT OVER 7.2" RIB PANEL 20ga

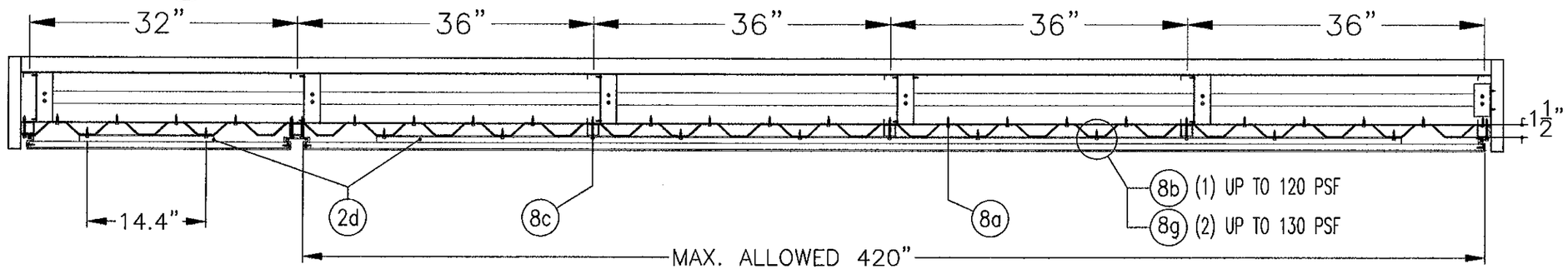

(C) REYNOBOND® PE/FR w/BACKER SUPPORT OVER METAL STUD/ 5/8"PLYWOOD

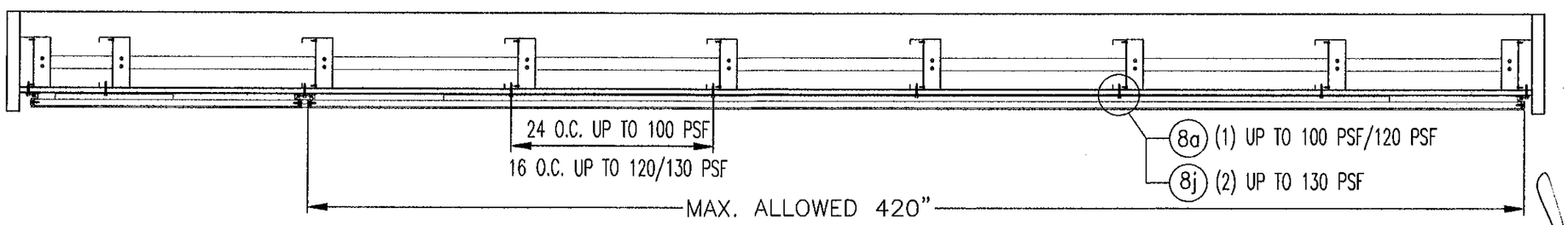

Approved as complying with the Florida Building Code
Date 03/31/2011
NOA# 10-1119.05
Miami Dade Product Control
By

Alcoa Architectural Products 50 Industrial Boulevard Eastman, Georgia 31023 USA Tel: (478) 374 6871 ALCOA	SUBMITTAL DWG. DWG. NO. MD-009 MIAMI DADE BUILDING CODE	DATE: 03-07-11 REVISION: 02
CONFIDENTIAL AND PROPRIETARY PROPERTY OF ALCOA ARCHITECTURAL PRODUCTS Which May Be Used Only For Its Benefit And Which May Not Be Reproduced Or Disclosed To Others. This Document And All Copies Must Be Returned On Demand.	REYNOBOND® PE/FR LARGE MISSILE IMPACT BACKER SUPPORTS: CMU, 7.2" RIB PANEL 20ga, METAL STUD w/ 5/8" PLYWOOD. DRY AND WET SEAL	SHEET: 19 OF 21

REYNOBOND® w/ PE–FR w/BACKER SUPPORTS: CMU, 7.2" RIB PANEL 20ga, PLYWOOD 5/8".

PANEL ELEVATION

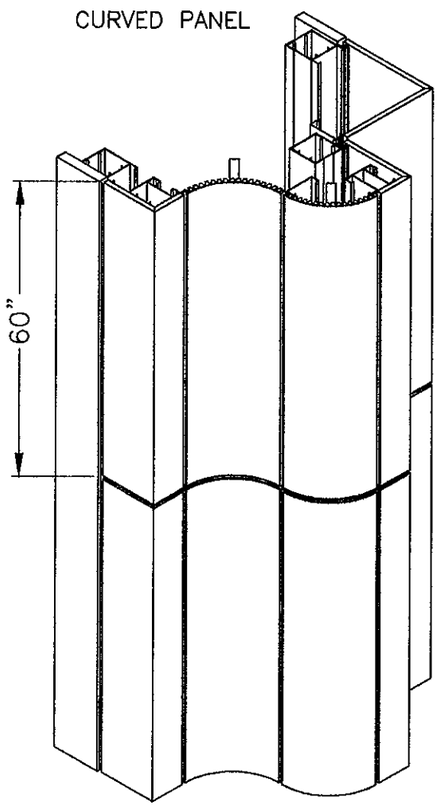

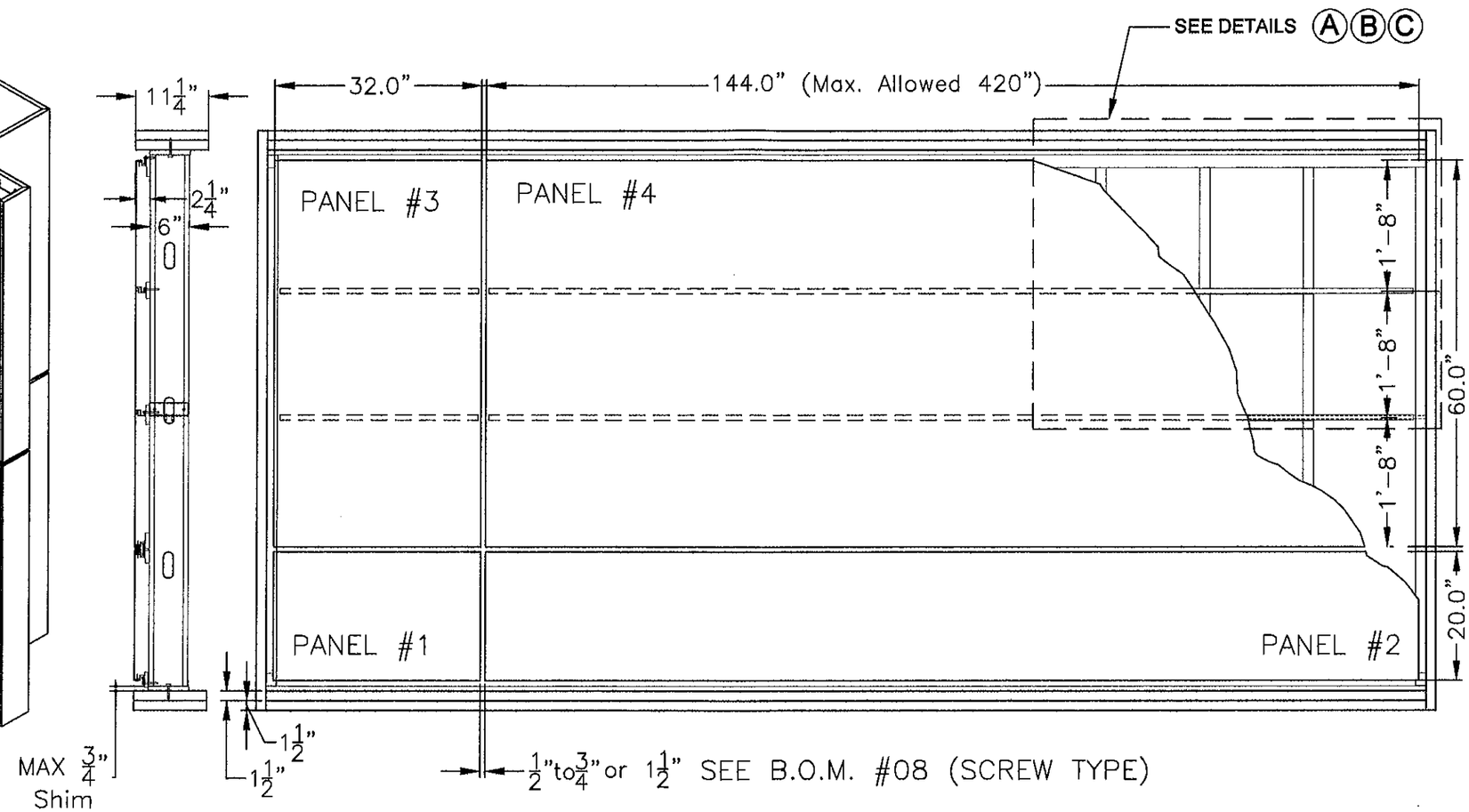

A REYNOBOND® PE/FR w/BACKER SUPPORT OVER CMU or CONCRETE

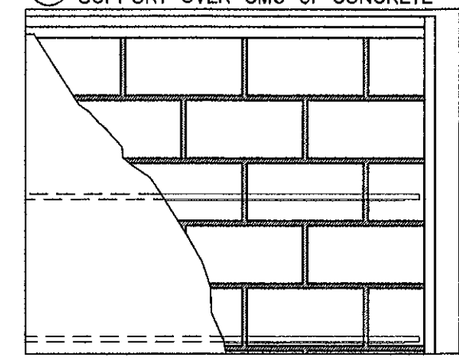

B REYNOBOND® PE/FR w/BACKER SUPPORT OVER 7.2" RIB PANEL 20ga

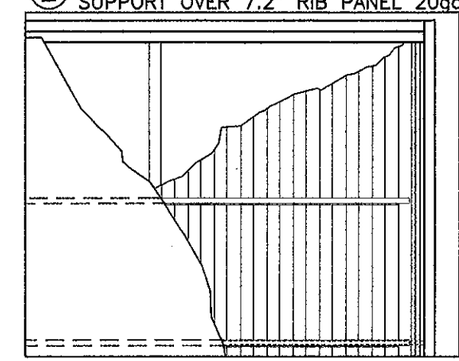

C REYNOBOND® PE/FR w/BACKER SUPPORT OVER METAL STUD/ 5/8"PLYWOOD

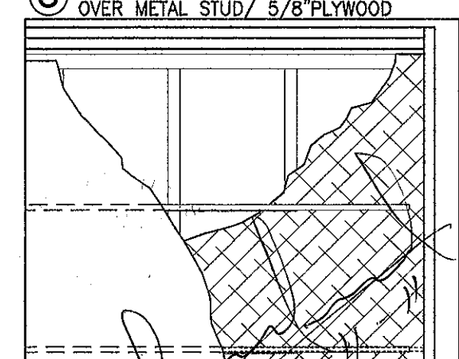

Approved as complying with the Florida Building Code
Date 03/31/2011
NOA# 10-1119.05
Miami Dade Product Control
By

Alcoa Architectural Products 50 Industrial Boulevard Eastman, Georgia 31023 USA Tel: (478) 374 6871 ALCOA	SUBMITTAL DWG. DWG. NO. MD–009 MIAMI DADE BUILDING CODE	DATE: 03–07–11 REVISION: 02
CONFIDENTIAL AND PROPRIETARY PROPERTY OF ALCOA ARCHITECTURAL PRODUCTS Which May Be Used Only For Its Benefit And Which May Not Be Reproduced Or Disclosed To Others. This Document And All Copies Must Be Returned On Demand.	REYNOBOND® PE/FR LARGE MISSILE IMPACT BACKER SUPPORTS: CMU, 7.2" RIB PANEL 20ga, METAL STUD w/ 5/8" PLYWOOD. DRY AND WET SEAL	SHEET: 20 OF 21

REYNOBOND® w/ PE-FR w/BACKER SUPPORTS: CMU, 7.2" RIB PANEL 20ga, PLYWOOD 5/8".

PANEL TERMINATION

13 SECTION DETAIL TOP / BOTTOM

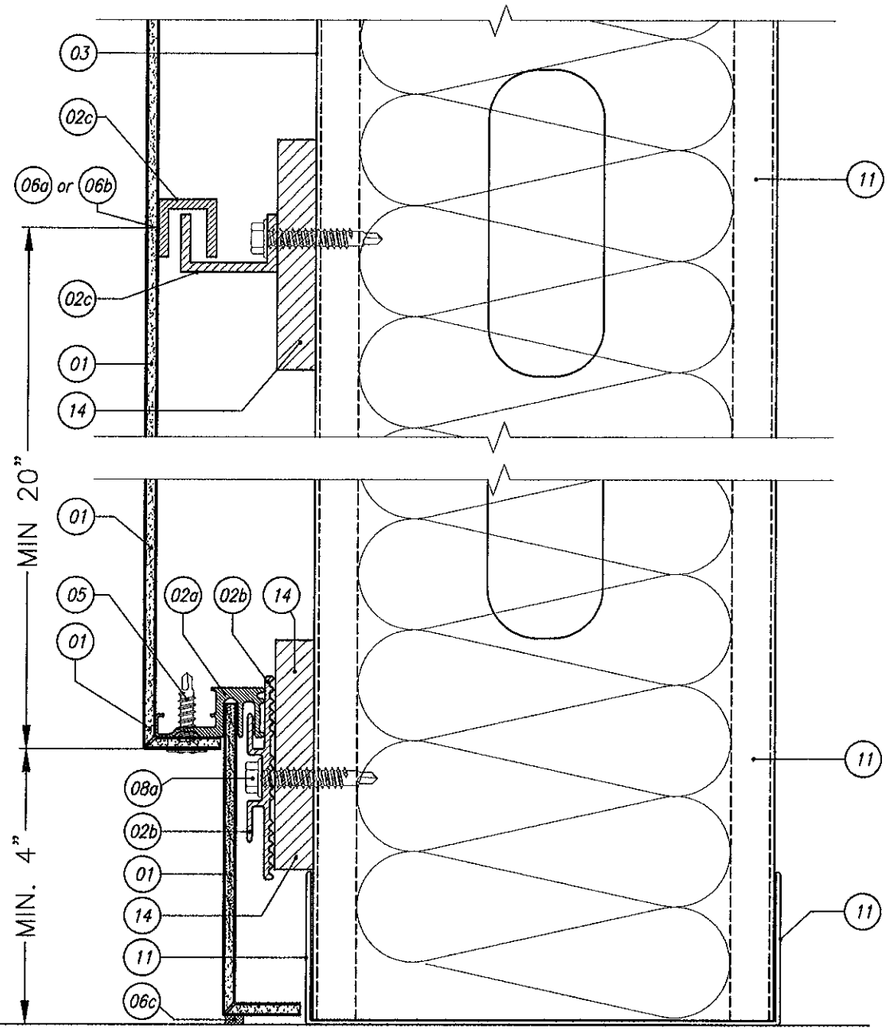

CMU / CONCRETE
LIMITATIONS & RESTRICTIONS SCREW 08h
EDGE CONDITION BETWEEN 1" to 2.5"
ABOVE 2.5" RESTRICTION DO NOT APPLY
PERSPECTIVE FROM SECTION DETAIL 09 – PAGE 13

09 VERTICAL / HORIZONTAL APPLICATIONS

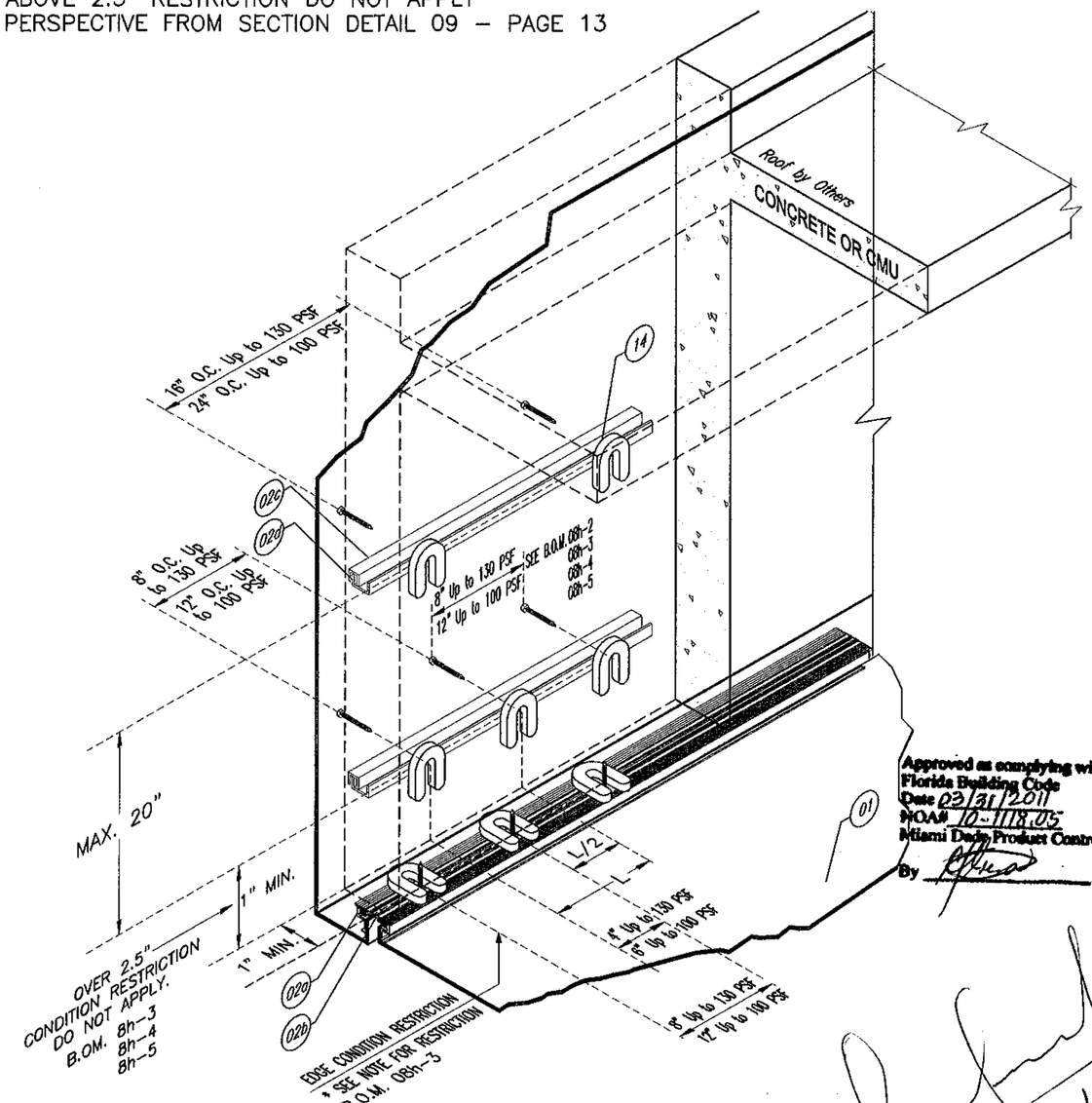

Approved as complying with the Florida Building Code
Date 03/31/2011
NOA# 10-1118.05
Miami Dade Product Control
By

3-11-11

FRAME 02a

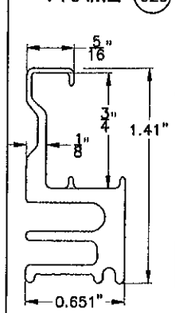

CLIP 02b and "J" CLIP (a CUT from CLIP)

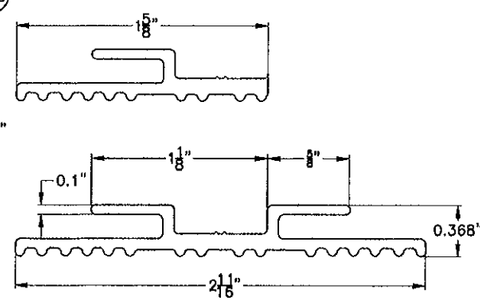

STIFFENER 02c

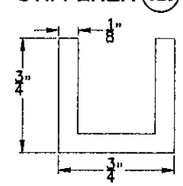

RETAINER 02d

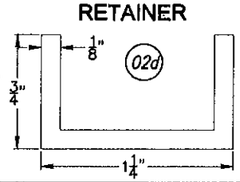

EPDM GASKET FOR DRY SEAL ONLY 15

CORNER ANGLE

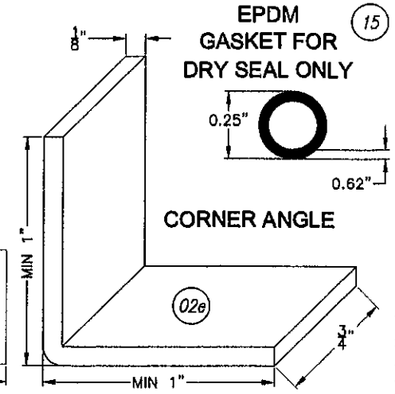

Alcoa Architectural Products 50 Industrial Boulevard Eastman, Georgia 31023 USA Tel: (478) 374 6871 ALCOA	SUBMITTAL DWG. DWG. NO. MD-009 MIAMI DADE BUILDING CODE	DATE: 03-07-11 REVISION: 02
CONFIDENTIAL AND PROPRIETARY PROPERTY OF ALCOA ARCHITECTURAL PRODUCTS Which May Be Used Only For Its Benefit And Which May Not Be Reproduced Or Disclosed To Others. This Document And All Copies Must Be Returned On Demand.	REYNOBOND® PE/FR LARGE MISSILE IMPACT BACKER SUPPORTS: CMU, 7.2" RIB PANEL 20ga, METAL STUD w/ 5/8" PLYWOOD. DRY AND WET SEAL	SHEET: 21 OF 21