MIAMI-DADE COUNTY, FLORIDA
PRODUCT CONTROL SECTION

BUILDING AND NEIGHBORHOOD COMPLIANCE DEPARTMENT (BNC)
BOARD AND CODE ADMINISTRATION DIVISION

11805 SW 26 Street, Room 208
Miami, Florida 33175-2474
T (786) 315-2590 F (786) 315-2599
www.miamidade.gov/building/home/asp

NOTICE OF ACCEPTANCE (NOA)

Firestone Building Products Company, LLC
250 West 96th Street
Indianapolis, IN 46260

SCOPE:
This NOA is being issued under the applicable rules and regulations governing the use of construction materials. The documentation submitted has been reviewed by Miami-Dade County Product Control Section and accepted by the Board of Rules and Appeals (BORA) to be used in Miami Dade County and other areas where allowed by the Authority Having Jurisdiction (AHJ).

This NOA shall not be valid after the expiration date stated below. The Miami-Dade County Product Control Section (In Miami Dade County) and/or the AHJ (in areas other than Miami Dade County) reserve the right to have this product or material tested for quality assurance purposes. If this product or material fails to perform in the accepted manner, the manufacturer will incur the expense of such testing and the AHJ may immediately revoke, modify, or suspend the use of such product or material within their jurisdiction. BORA reserves the right to revoke this acceptance, if it is determined by Miami-Dade County Product Control Section that this product or material fails to meet the requirements of the applicable building code.

This product is approved as described herein, and has been designed to comply with the Florida Building Code, including the High Velocity Hurricane Zone.

DESCRIPTION: UC-3 Standing Seam RHEINZINK Metal Roof Panels on a 22 ga. B-Deck

LABELING: Each unit shall bear a permanent label with the manufacturer's name or logo, College Park, GA; Jackson, MS; Anoka, MN and the following statement: "Miami-Dade County Product Control Approved", unless otherwise noted herein.

RENEWAL of this NOA shall be considered after a renewal application has been filed and there has been no change in the applicable building code negatively affecting the performance of this product.

TERMINATION of this NOA will occur after the expiration date or if there has been a revision or change in the materials, use, and/or manufacture of the product or process. Misuse of this NOA as an endorsement of any product, for sales, advertising or any other purposes shall automatically terminate this NOA. Failure to comply with any section of this NOA shall be cause for termination and removal of NOA.

ADVERTISEMENT: The NOA number preceded by the words Miami-Dade County, Florida, and followed by the expiration date may be displayed in advertising literature. If any portion of the NOA is displayed, then it shall be done in its entirety.

INSPECTION: A copy of this entire NOA shall be provided to the user by the manufacturer or its distributors and shall be available for inspection at the job site at the request of the Building Official.

This NOA **revises NOA # 10-0520.03** and consists of pages 1 through 6.
The submitted documentation was reviewed by **Helmy A. Makar, P.E., M.S.**

MIAMI-DADE COUNTY APPROVED

Helmy A. Makar
01/20/2011

NOA No. 10-1214.10
Expiration Date: 08/18/2015
Approval Date: 01/20/2011

ROOFING ASSEMBLY APPROVAL

Category:	Roofing
Sub-Category:	Metal, Panels (Non-Structural)
Material:	24-ga. (t=0.024") RHEINZINK
Deck Type:	22 ga. (0.032" min.) G90 galvanized Steel B-Deck.
Maximum Design Pressure	-86.0 psf

TRADE NAMES OF PRODUCTS MANUFACTURED OR LABELED BY APPLICANT:

Product	Dimensions	Test Specifications	Product Description
UC-3 RHEINZINK Standing Seam Metal Roof Panel	l = various w = 16" h = 1.50" Min. 0.024" thick (14.50 ksi min. yield)	PA 110	RHEINZINK, preformed, standing seam, coated, prefinished, metal panels.
Trim Pieces	l = varies w = varies min. 24 ga.	PA 110	Standard flashing and trim pieces. Manufactured for each panel width.
Panel Clips	Clip base 1.0" wide x 0.420" high x 5.0" long 0.024" thick Stainless Steel Clip top 0.412" wide x 1.870" high x 3.0" long 0.018" thick Stainless Steel	PA 114 Appendix E	Corrosion resistant, formed, painted or unpainted steel clips for metal panel installation.

TRADE NAMES OF PRODUCTS MANUFACTURED BY OTHERS:

Product	Dimensions	Product Description	Manufacturer
Fire Barrier Board ("Dens Deck")	min. ¼" thick	Fire barrier for Class 'A' fire rating.	Georgia-Pacific with current PCA
Fire Barrier ("Roctex")	min. 450 grams/m^2	Fire barrier for Class 'A' fire rating.	Partek Insulations, Inc.
Fasteners (Panel Clips)	min. #12 x 3" Pancake Head SMS screw.	Corrosion resistant, pancake head, self-drilling, self-threading screws	generic

MIAMI-DADE COUNTY APPROVED

01/20/2011

EVIDENCE SUBMITTED:

Test Agency	Test Identifier	Test Name/Report	Date
Center For Applied Engineering, Inc.	MTS 257364	PA 100	Sept. 1995
Akzo Coatings		ASTM G 23 ASTM B 117	
Valspar Corporation		ASTM G 23 ASTM B 117	
Hurricane Test Laboratory, Inc.	0227-0706-04	PA 125	10/10/04
Colbond	Enkamat 7010	Drainage and Ventilation Material	10/24/00

APPROVED ASSEMBLY:

SYSTEM A-1: UC-3 Standing Seam RHEINZINK Metal Roof Panels

Deck Type: Galvanized Steel, Insulated

Deck Description: New Construction or Re-roof
22 ga. (0.032" min.) G90 galvanized Steel B-Deck

Slope Range: 2":12" or greater

Maximum Uplift Pressure: The maximum allowable design pressure for the 16" wide panel shall be **–86.0** psf.

Deck Attachment: Deck shall be attached in accordance with applicable Building Code, but in no case shall it be less than 5/8" diameter puddle welds 12" o.c. to the supports that spaced at 48" maximum, 5/8" diameter puddle welds 6" o.c. around deck perimeter to the supports, ¼ x ¾" HH stitch screws at 12" o.c. at the deck sidelaps.

Underlayment: Minimum underlayment shall be an ASTM D 226 Type II installed with a minimum 4" side-lap and 6" end-laps. Underlayment shall be fastened with #12 x 4" truss head screws with insulation plate spaced 24"on center in the field of the roll and its perimeter. Or, any approved underlayment having a current NOA.

Fire Barrier Board: Any approved fire barrier having a current NOA. Or for class A or B fire rating, install minimum ¼" thick Georgia Pacific "Dens Deck" (with current NOA) or minimum 4mm thick of Tritex, RockRoof (with current NOA) or $^5/_8$" water resistant type X gypsum sheathing with treated core and facer. An ISO insulation of 0" to 4" thick is laid on top of the fire barrier board. The ISO insulation is 4' x 4' sheets. Insulation is fastened by one #12 x 4" truss head screws with insulation plate at each corner of the sheet at the roof's perimeter and one #12 x 4" truss head screws with insulation plate at the center of each sheet at the roof's field.

Valleys: Valley construction shall be in compliance with Roofing Application Standard RAS 133 and with Copper Sales' current published installation instructions.

Metal Panels and Accessories: Install the "UC-3 Standing Seam RHEINZINK Metal Roof Panels" and accessories in compliance with Copper Sales' current, published installation instructions and details. Flashing, penetrations, valley construction and other details shall be constructed in compliance with the minimum requirements provided in Roofing Application Standards RAS 133. Each roof panel is mechanically attached to the Steel B-Deck along it's male rib using the approved clips (5.0" long x 1-5/16" wide x 1-15/16" tall) located 6" from each panel end and 12" o.c. (Roof's Field, Perimeter and Corner) thereafter. Each clip is attached to B-Deck substrate with two corrosion resistant #12 x 3" Pancake Head SMS screws of sufficient length to penetrate through the B-Deck.

SYSTEM LIMITATIONS

1. The maximum design pressure limitation listed herein shall be applicable to all roof pressure zones (i.e. field, perimeters, and corners). Neither rational analysis, nor extrapolation shall be permitted for enhanced fastening at enhanced pressure zones (i.e. perimeters, and corners).

2. Panel shall be roll formed in continuous lengths from eave to ridge. Maximum lengths shall be as described in the Roofing Application Standard RAS 133.

3. All panels shall be permanently labeled with the manufacturer's name or logo, College Park, GA; Jackson, MS; Anoka, MN and the following statement: "Miami Dade County Product Control Approved". All clips shall be permanently labeled with the manufacturer's name and/or logo, and/or model.

PROFILE DRAWINGS

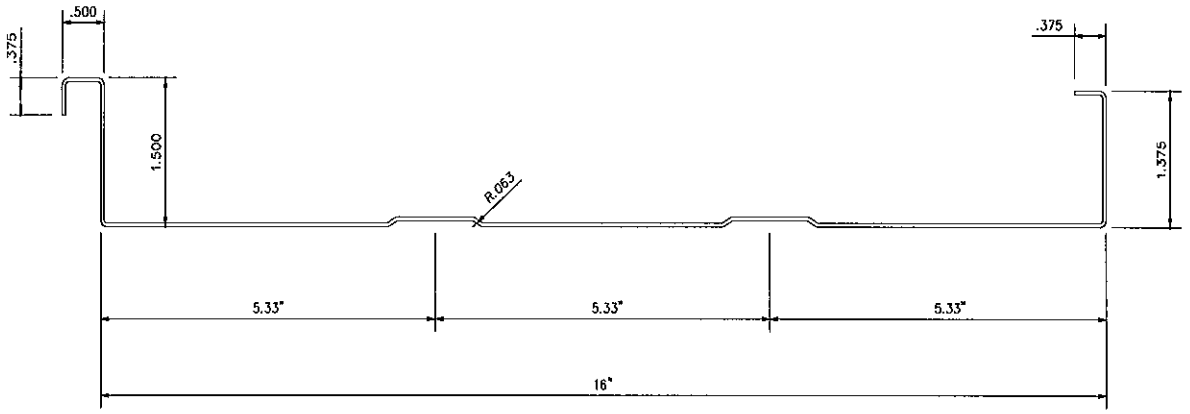

Standing SEAM RHEINZINK METAL PANEL
(STIFFENING RIBS OPTIONAL)

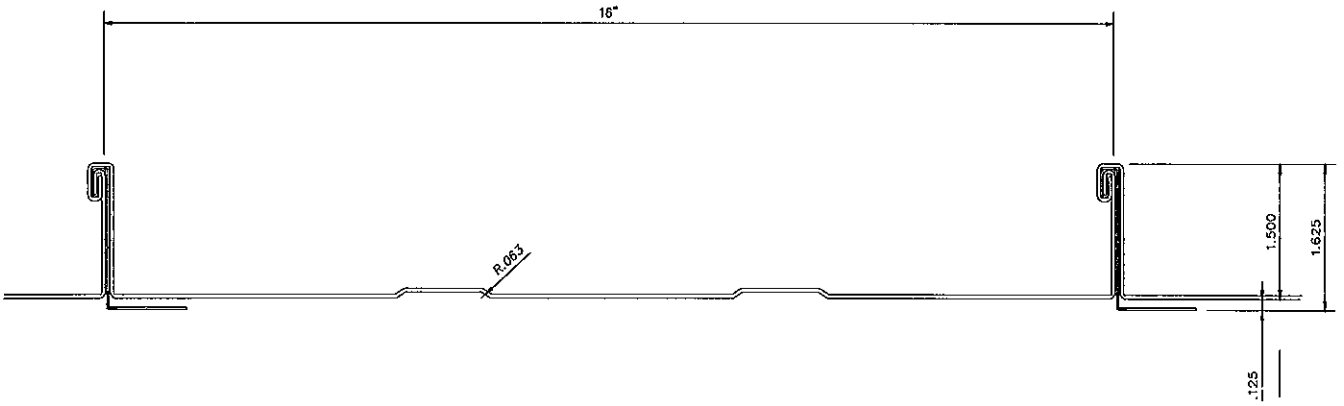

MIAMI-DADE COUNTY APPROVED

01/20/2011

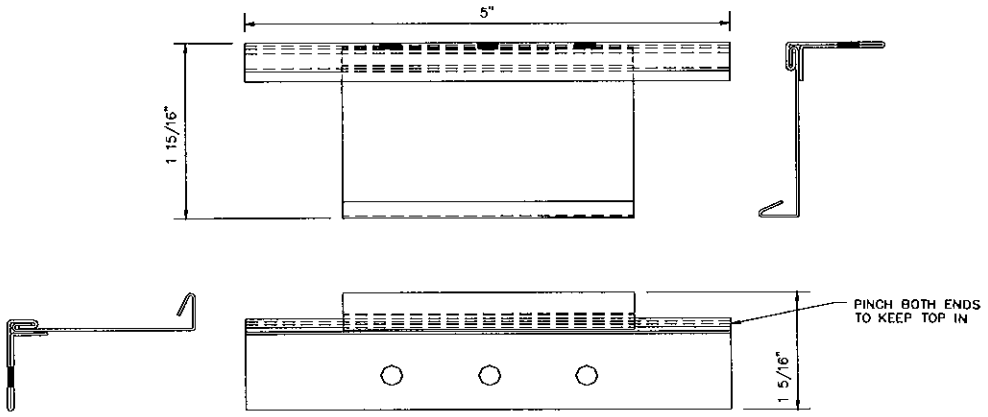

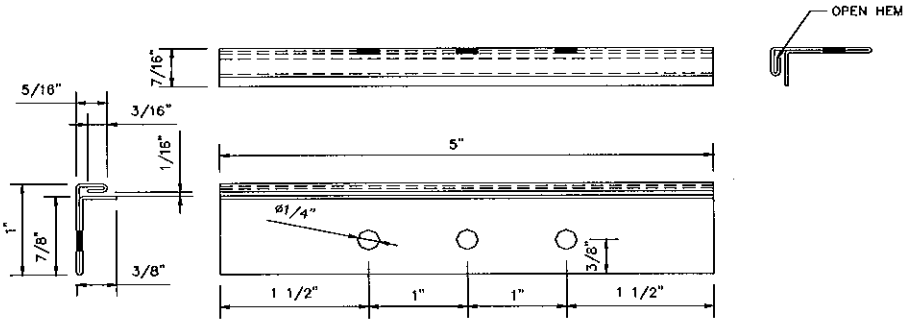

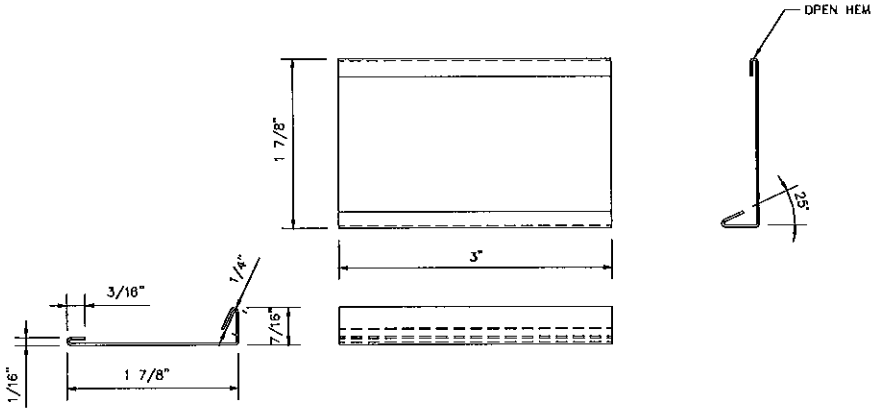

PANEL CLIP

END OF THIS ACCEPTANCE

MIAMI-DADE COUNTY APPROVED

01/20/2011

NOA No. 10-1214.10
Expiration Date: 08/18/2015
Approval Date: 01/20/2011