MIAMI-DADE COUNTY
BUILDING AND NEIGHBORHOOD COMPLIANCE DEPARTMENT (BNC)
BOARD AND CODE ADMINISTRATION DIVISION

MIAMI–DADE COUNTY, FLORIDA
PRODUCT CONTROL SECTION
11805 SW 26th Street, Room 208
Miami, Florida 33175–2474
T (786) 315–2590 F (786) 315–2599
www.miamidade.gov/building

NOTICE OF ACCEPTANCE (NOA)

Oldcastle BuildingEnvelope, Inc.
803 Airport Road
Terrell, TX 75160

SCOPE:

This NOA is being issued under the applicable rules and regulations governing the use of construction materials. The documentation submitted has been reviewed by Miami–Dade County Product Control Section and accepted by the Board of Rules and Appeals (BORA) to be used in Miami–Dade County and other areas where allowed by the Authority Having Jurisdiction (AHJ).

This NOA shall not be valid after the expiration date stated below. The Miami–Dade County Product Control Section (In Miami–Dade County) and/or the AHJ (in areas other than Miami–Dade County) reserve the right to have this product or material tested for quality assurance purposes. If this product or material fails to perform in the accepted manner, the manufacturer will incur the expense of such testing and the AHJ may immediately revoke, modify, or suspend the use of such product or material within their jurisdiction. BORA reserves the right to revoke this acceptance, if it is determined by Miami–Dade County Product Control Section that this product or material fails to meet the requirements of the applicable building code. This product is approved as described herein, and has been designed to comply with the Florida Building Code, including the High Velocity Hurricane Zone.

DESCRIPTION: Series "MSD–375 Medium Stile" 8'0" Outswing Glazed Aluminum Entrance Doors with and/ or without Transom – L.M.I.

APPROVAL DOCUMENT: Drawing No. **10–078**, titled "Series MSD–375 Aluminum Medium Stile Entrance Door (Wet Glazed) Large & Small Missile Impact", sheets 1 through 24 of 24 including sheet 16A, dated 12/06/10 with revision "1" dated 12/06/10, prepared by Tilteco, Inc., signed and sealed by Walter A. Tillit, Jr., P. E., bearing the Miami–Dade County Product Control Revision stamp with the Notice of Acceptance number and Expiration date by the Miami–Dade County Product Control Section.

MISSILE IMPACT RATING: Large and Small Missile Impact Resistant.

LIMITATIONS: Maximum Design Pressure Rating of + 70 psf (Positive) and – 80 psf (Negative).

LABELING: Each unit shall bear a permanent label with the manufacturer's name or logo, city, state and following statement: "Miami–Dade County Product Control Approved", unless otherwise noted herein.

RENEWAL of this NOA shall be considered after a renewal application has been filed and there has been no change in the applicable building code negatively affecting the performance of this product.

TERMINATION of this NOA will occur after the expiration date or if there has been a revision or change in the materials, use, and/or manufacture of the product or process. Misuse of this NOA as an endorsement of any product, for sales, advertising or any other purposes shall automatically terminate this NOA. Failure to comply with any section of this NOA shall be cause for termination and removal of NOA.

ADVERTISEMENT: The NOA number preceded by the words Miami–Dade County, Florida, and followed by the expiration date may be displayed in advertising literature. If any portion of the NOA is displayed, then it shall be done in its entirety.

INSPECTION: A copy of this entire NOA shall be provided to the user by the manufacturer or its distributors and shall be available for inspection at the job site at the request of the Building Official.
This NOA **revises NOA No. 09–1228.01** and consists of this page 1, evidence pages E–1, E–2, and E–3, as well as approval document mentioned above.
The submitted documentation was reviewed by **Helmy A. Makar, P.E., M.S.**

MIAMI-DADE COUNTY APPROVED

Helmy A. Makar
01/20/2011

NOA No. 10–1214.16
Expiration Date: 02/17/2015
Approval Date: 01/20/2011

NOTICE OF ACCEPTANCE: EVIDENCE SUBMITTED

A. DRAWINGS

1. Manufacturer's die drawings and sections.
2. Drawing No **10–078**, titled "Series MSD–375 Aluminum Medium Stile Entrance Door (Wet Glazed) Large & Small Missile Impact", sheets 1 through 24 of 24, dated 12/06/10 with revision "**1**" dated 12/06/10, prepared by Tilteco, Inc., signed and sealed by Walter A. Tilt, Jr., P. E.

B. TESTS

1. Test reports on: 1) Uniform Static Air Pressure Test, per FBC, TAS 202–94
   2) Large Missile Impact Test per FBC, TAS 201–94
   3) Cyclic Wind Pressure Loading per FBC, TAS 203–94
   4) Forced Entry Test, per FBC 2411 3.2.1 and TAS 202–94

   along with marked–up drawings and installation diagram of **aluminum medium stile entrance doors**, prepared by Architectural Testing, Inc., Test Report No. **ATI–89818.01–401–18,** dated 11/18/08 and 06/26/09, both signed and sealed by Joseph A. Reed, P. E.
   (Submitted under previous NOA No.09–1228.01)
2. Test reports on: 1) Air Infiltration Test, per FBC, TAS 202–94
   2) Uniform Static Air Pressure Test, Loading per FBC TAS 202–94
   3) Water Resistance Test, per FBC, TAS 202–94
   4) Large Missile Impact Test per FBC, TAS 201–94
   5) Cyclic Wind Pressure Loading per FBC, TAS 203–94
   6) Forced Entry Test, per FBC 2411 3.2.1, TAS 202–94

   along with marked–up drawings and installation diagram of **aluminum medium stile entrance doors**, prepared by Hurricane Test Laboratory, Inc., Test Report No. **HTL–0105–1030–02, (specimens 1, 2, 5, 6, 8, & 9)** dated 10/21 and 22/02, signed and sealed by Vinu J. Abraham, P. E.
   (Submitted under previous NOA No.04–0209.03)
3. Test reports on: 1) Uniform Static Air Pressure Test, per FBC, TAS 202–94
   2) Large Missile Impact Test per FBC, TAS 201–94
   3) Cyclic Wind Pressure Loading per FBC, TAS 203–94
   4) Forced Entry Test, per FBC 2411 3.2.1 and TAS 202–94

   along with marked–up drawings and installation diagram of **aluminum medium stile entrance doors**, prepared by Hurricane Test Laboratory, Inc., Test Report No. **HTL–0105–0712–03, HTL–0105–0205–03** and **HTL–0105–0810–03,** dated 07/08 and 09/03, all signed and sealed by Vinu J. Abraham, P. E.
   (Submitted under previous NOA No.04–0209.03)

Helmy A. Makar, P.E., M.S.
BNC Product Control Unit Supervisor
NOA No. 10–1214.16
Expiration Date: 02/17/2015
Approval Date: 01/20/2011

NOTICE OF ACCEPTANCE: EVIDENCE SUBMITTED

B. TESTS (CONTINUED)

4. Test reports on 1) Air Infiltration Test, per FBC, TAS 202–94
2) Uniform Static Air Pressure Test, per FBC, TAS 202–94
3) Forced Entry Test, per FBC 2411 3.2.1 and TAS 202–94
along with marked–up drawings and installation diagram of **aluminum medium stile entrance doors**, prepared by Hurricane Test Laboratory, Inc., Test Report No. **HTL–0105–0210–04,** dated 02/09–04/05/04, signed and sealed by Vinu J. Abraham, P. E.
(Submitted under previous NOA No.04–0209.03)

5. Test reports on 1) Cyclic Wind Pressure Loading per FBC, TAS 203–94
2) Forced Entry Test, per FBC 2411 3.2.1 and TAS 202–94
along with marked–up drawings and installation diagram of **aluminum medium stile entrance doors**, prepared by Hurricane Test Laboratory, Inc., Test Reports No. **HTL–0105–0407–04,** dated 02/09–04/05/04, signed and sealed by Vinu J. Abraham, P. E.
(Submitted under previous NOA No.04–0209.03)

6. Test reports on 1) Air Infiltration Test, per FBC, TAS 202–94
2) Uniform Static Air Pressure Test, per FBC, TAS 202–94
3) Large Missile Impact Test per FBC, TAS 201–94
4) Cyclic Wind Pressure Loading per FBC, TAS 203–94
along with marked–up drawings and installation diagram of **aluminum medium stile entrance doors**, prepared by Certified Testing Laboratories, Inc., Test Report No. **CTLA–1177W,** dated 01/06/04, signed and sealed by Ramesh Patel, **P.** E.
(Submitted under previous NOA No.04–0209.03)

C. CALCULATIONS

1. Anchor verification calculations and structural analysis, complying with FBC–2007, prepared by Tilteco, Inc., dated 12/09/10, signed and sealed by Walter A. Tilt, Jr., P. E.
Complies with ASTM E1300–04

D. QUALITY ASSURANCE

1. Miami–Dade Building and Neighborhood Compliance Department (BNC).

E. MATERIAL CERTIFICATIONS

1. Notice of Acceptance No. **08–0206.01** issued to Solutia Inc. for their **"Saflex HP Glass Interlayer"** dated 04/17/2008, expiring on 04/17/2013.

2. Notice of Acceptance No. **08–0520.08** issued to Solutia Inc. for their "**Vanceva Composites Glass Interlayer**" dated 7/17/08, expiring on 12/11/13.

Helmy A. Makar, P.E., M.S.
BNC Product Control Unit Supervisor
NOA No. 10–1214.16
Expiration Date: 02/17/2015
Approval Date: 01/20/2011

NOTICE OF ACCEPTANCE: EVIDENCE SUBMITTED

F. STATEMENTS

1. Asset transfer agreement dated April 20, 2010, signed by Mr. James Avanzini, Present.
2. Asset sale agreement dated June 29, 2007, signed by Mr. Adam j. Newman, Vice President, by Mr. Robert Johnson, Treasurer and by Mr. Daipayan (Deep) Bhattacharya, Vice President.
   (Submitted under previous NOA No.09 –1228.01)
3. Statement letter of name change issued by Oldcastle BuildingEnvelope, Inc., dated October 19, 2010, signed by Mrs. Jacqueline D. Butler, Corporate Paralegal/ Legal Assistant.
4. Statement letter of compliance with the FBC 2007, dated December 17, 2009, Tilteco, Inc., signed and sealed by Walter A. Tilt, Jr., P. E.
   (Submitted under previous NOA No.09 –1228.01)
5. Statement letter of conformance and no financial interest, dated December 17, 2009, Tilteco, Inc., signed and sealed by Walter A. Tilt, Jr., P. E.
   (Submitted under previous NOA No.09 –1228.01)
6. Laboratory compliance letter for Test Report No. **ATI–89818.01–401–18**, issued by Architectural Testing, Inc., dated 11/18/08, signed and sealed by Joseph A. Reed, P. E.
   (Submitted under previous NOA No. 09 –1228.01)
7. Laboratory compliance letter for Test Report No. **HTL–0105–1030–02, HTL–0105–0712–03, HTL–0105–0712–03, HTL–0105–0210–04, HTL–0105–0407–04, HTL–0105–0205–03** and **HTL–0105–0810–03**, issued by Hurricane Test Laboratory, Inc., dated 07/08/03 and 04/05/04, all signed and sealed by Vinu J. Abraham, P. E.
   (Submitted under previous NOA No. 04–0209.03)
8. Laboratory compliance letter for Test Report No. **CTLA–1177W**, issued by Certified Testing Laboratories, Inc., dated 01/06/04, signed and sealed by Ramesh Patel, P. E.
   (Submitted under previous NOA No. 04–0209.03)

G. OTHERS

1. Notice of Acceptance No. **09–1228.01**, issued to Oldcastle Glass Engineered Products for their Series "MSD–375 Medium Stile" 8'0" Outswing Glazed Aluminum Entrance Doors with and/ or without Transom – L.M.I.", approved on 03/31/10 and expiring on 02/17/15.

Hemy A. Makar, P.E., M.S.
BNC Product Control Unit Supervisor
NOA No. 10–1214.16
Expiration Date: 02/17/2015
Approval Date: 01/20/2011

PRODUCT APPROVAL FOR SERIES MSD-375 ALUMINUM MEDIUM STILE ENTRANCE DOORS (WET GLAZED) FOR USE IN HURRICANE ZONES REQUIRING LARGE & SMALL MISSILE IMPACT PROTECTION.

GENERAL NOTES:

1. SERIES MSD-375 ALUMINUM MEDIUM STILE ENTRANCE DOORS (WET GLAZED) LARGE & SMALL MISSILE IMPACT LAMINATED GLASS SHOWN ON THIS PRODUCT APPROVAL DOCUMENT (P.A.D.) HAS BEEN VERIFIED FOR COMPLIANCE IN ACCORDANCE WITH THE 2007 EDITION OF THE FLORIDA BUILDING CODE.
   THIS PRODUCT MAY BE INSTALLED WITHIN HIGH VELOCITY HURRICANE ZONES.
   DESIGN WIND LOADS SHALL BE DETERMINED AS PER SECTION 1620 OF THE ABOVE MENTIONED CODE. IN ORDER TO VERIFY THAT ANCHORS ON THIS P.A.D., AS TESTED, WERE NOT OVERSTRESSED, A 33% INCREASE IN ALLOWABLE STRESS FOR WIND LOADS WAS **NOT** USED IN THEIR ANALYSIS. FASTENERS SPACING TO WOOD HAS BEEN DETERMINED IN ACCORDANCE WITH N.D.S. 2005.
   THIS PRODUCT'S ADEQUACY FOR IMPACT AND WIND RESISTANCE HAS BEEN VERIFIED IN ACCORDANCE WITH SECTION 1626 OF THE ABOVE MENTIONED CODE AS PER PROTOCOLS TAS-201, TAS-202, TAS-203, PER HURRICANE TESTING LABORATORY REPORTS # HTL-0105-1030-02, HTL-0105-0712-03, HTL-0105-0205-03, HTL-0105-0810-03, HTL-0105-0210-04 AND HTL-0105-0407-04; PER CERTIFIED TESTING LABORATORIES REPORT # CTLA-1177W (FOR DOOR CERTIFICATION INSTALLATION WITH FG-5000 AND FG-5100 WINDOW WALL SYSTEM), AND AS PER SUBMITTED STRUCTURAL CALCULATIONS, PERFORMED AS PER SECTION 1612 OF THE FLORIDA BUILDING CODE.
2. **MAXIMUM DESIGN PRESSURE RATING FOR THIS PRODUCT SHALL BE +70 psf, -80 psf.**
3. THIS PRODUCT WILL NOT REQUIRE A HURRICANE PROTECTION DEVICE.
4. THIS PRODUCT IS APPROVED FOR AIR INFILTRATION.
5. THIS PRODUCT IS NOT APPROVED FOR WATER INFILTRATION.
6. PROVIDE 1/4" MAX. LOAD BEARING SHIM (TYP.), WHEN ALLOWED BY THIS DRAWING.
7. ALL SCREWS USED FOR ASSEMBLY CONNECTIONS (METAL TO METAL TO BE STAINLESS STEEL 304 OR 316 AISI SERIES OR CORROSION RESISTANT COATED CARBON STEEL AS PER DIN 50018 AND SECTION 2411.3.3.4 OF THE FLORIDA BUILDING CODE WITH 50 ksi YIELD STRENGTH AND 90 ksi TENSILE STRENGTH.
8. WOOD BUCKS BY OTHERS, MUST BE ANCHORED PROPERLY TO TRANSFER LOADS TO THE BUILDING STRUCTURE. WOOD BUCKS MUST BE SOUTHERN PINE, G = 0.55, AND SHALL COMPLY WITH SECTIONS 2411.3.3.3 & 2326 OF THE 2007 EDITION OF THE FLORIDA BUILDING CODE.
9. REMAINING COMPONENTS FOR THIS PRODUCT SHALL BE AS INDICATED ON BILL OF MATERIALS, SHEETS 4 & 5 OF THIS DRAWING AND AT HARDWARE SCHEDULE ON SHEETS 6 & 7 OF THE DRAWING.
10. ALL ALUMINUM EXTRUSIONS IN CONTACT WITH STEEL, CONCRETE, GROUT FILLED CONCRETE BLOCK AND WOOD SHALL COMPLY WITH SECTIONS 2003.8.4.2, 2003.8.4.4, 2003.8.5 AND 2003.8.6 OF THE FLORIDA BUILDING CODE, RESPECTIVELY.
11. SHOP DRAWINGS PREPARED BASED ON THIS APPROVAL AND TAKING INTO ACCOUNT THE SPECIFIC JOB CONDITIONS, SHALL BE SUBMITTED TO THE BUILDING OFFICIAL AS PART OF THE PERMIT DOCUMENTS.
12. STRUCTURAL STEEL NOTED ON THESE DRAWINGS AS EXISTING STEEL BY OTHERS, POURED CONCRETE, GROUT FILLED CONCRETE BLOCK AND WOOD MUST WITHSTAND THE LOADS IMPOSED BY THIS PRODUCT.
13. THIS PRODUCT'S INSTALLATION SHALL COMPLY WITH ALL SPECS INDICATED IN THIS DRAWING PLUS ANY BUILDING AND ZONING REGULATIONS PROVIDED BY THE JURISDICTION WHERE PERMIT IS APPLIED TO.
14. (a) THIS P.A.D. PREPARED BY THIS ENGINEER IS GENERIC AND DOES NOT PROVIDE INFORMATION FOR A SITE SPECIFIC PROJECT; i.e. WHERE THE SITE CONDITIONS DEVIATE FROM THE P.A.D.

    (b) CONTRACTOR TO BE RESPONSIBLE FOR THE SELECTION, PURCHASE AND INSTALLATION INCLUDING LIFE SAFETY OF THIS PRODUCT, BASED ON THIS P.A.D., PROVIDED HE/SHE DOES NOT DEVIATE FROM THE CONDITIONS DETAILED ON THIS DOCUMENT. CONSTRUCTION SAFETY AT SITE IS THE CONTRACTOR'S RESPONSIBILITY.

    (c) THIS P.A.D. WILL BE CONSIDERED INVALID IF ALTERED BY ANY MEANS.

    (d) SITE SPECIFIC PROJECTS SHALL BE PREPARED BY A FLORIDA REGISTERED ENGINEER OR ARCHITECT WHICH WILL BECOME THE ENGINEER OF RECORD (E.O.R.) FOR THE PROJECT AND WHO WILL BE RESPONSIBLE FOR THE PROPER USE OF THE P.A.D. ENGINEER OF RECORD, ACTING AS DELEGATED ENGINEER TO THE P.A.D. ENGINEER, SHALL SUBMIT TO THIS LATTER THE SITE SPECIFIC DRAWINGS FOR REVIEW.

    (e) ORIGINAL P.A.D. SHALL BEAR THE DATE AND ORIGINAL SEAL AND SIGNATURE OF THE PROFESSIONAL ENGINEER OF RECORD THAT PREPARED IT.
15. PRODUCT MANUFACTURER'S LABEL SHALL BE PLACED ON A READILY VISIBLE LOCATION: ONE LABEL SHALL BE PLACED FOR EVERY UNIT. LABEL SHALL READ AS FOLLOWS:

    Oldcastle
    BuildingEnvelope™
    TERRELL TX.
    MIAMI-DADE COUNTY PRODUCT CONTROL APPROVED.

INDEX:

SHEET 1: GENERAL NOTES AND INDEX.

SHEET 2: SERIES MSD-375 ALUM. MEDIUM STILE ENTRANCE DOORS (WET GLAZED) COMPONENTS.

SHEET 3: SERIES MSD-375 ALUM. MEDIUM STILE ENTRANCE DOORS (WET GLAZED) COMPONENTS (CONTINUED).

SHEET 4: BILL OF MATERIALS.

SHEET 5: BILL OF MATERIALS (CONTINUED).

SHEET 6: HARDWARE SCHEDULES (7'-0" X 8'-0" PAIR).

SHEET 7: HARDWARE SCHEDULES (3'-6" X 8'-0" SINGLE).

SHEET 8: TYPICAL GLAZED DETAILS AND GLASS SCHEDULE.

SHEET 9: TYPICAL PANEL ELEVATIONS FOR MSD-375 IMPACT DOOR (WET GLAZED).

SHEET 10: DOOR'S TOP BOTTOM RAILS AND HORIZONTAL MID-RAIL DETAILS (SIDE VIEWS).

SHEET 11: DOOR'S JAMB/MEETING STILES & THRESHOLD CONNECTION DETAILS (PLAN VIEWS) AND TYPICAL DOOR CORNER ASSEMBLY DETAIL (ISOMETRIC).

SHEET 12: TYPICAL ELEVATION FOR MSD-375 IMPACT DOOR (WET GLAZED) CONNECTED TO EXISTING STRUCTURE OR FG-5000 ALUM. WINDOW WALL SYSTEM FRAMING.

SHEET 13: TYPICAL ELEVATION FOR MSD-375 IMPACT DOOR (WET GLAZED) CONNECTED TO EXISTING STRUCTURE OR FG-5100 ALUM. WINDOW WALL SYSTEM FRAMING.

SHEET 14: TRANSOM BAR CONNECTION DETAILS (SIDE VIEWS AT FG-5000 AND FG-5100) AND THRESHOLD CONNECTION DETAILS (SIDE VIEWS AT FG-5000, FG-5100, HR-250 AND HR-251).

SHEET 15: HEADER CONNECTION DETAILS TO EXISTING STRUCTURE, FG-5000, FG-5100,

SHEET 16: JAMB & JAMB MULLION CONNECTION TO EXISTING STRUCTURE, FG-5000 AND FG-5100.

SHEET 16A: HEADER CONNECTION DETAILS TO EXISTING STRUCTURE.

SHEET 17: TYPICAL ELEVATION FOR MSD-375 IMPACT DOOR (WET GLAZED) CONNECTED TO EXISTING STRUCTURE OR HR-250 AND HR-251 CAPTURED CURTAIN WALL SYSTEM FRAMING.

SHEET 18: TRANSOM BAR AND HEADER CONNECTION DETAILS TO HR-250 AND HR-251).

SHEET 19: JAMB CONNECTION DETAILS TO HR-250.

SHEET 20: JAMB CONNECTION DETAILS TO HR-251.

SHEET 21: TYPICAL ELEVATIONS FOR DOOR ADJACENT TO FG-5000 & FG-5100 ALUM. WINDOW WALL SYSTEM FRAMING, TO EXISTING STRUCTURE AND TO HR-250 & HR-251 CAPTURED CURTAIN WALL SYSTEM FRAMING AND PERIMETER FRAME FASTENER LOCATIONS (TYPICAL INSTALLATION INTO CONCRETE OR GROUT FILLED CONCRETE BLOCK SUBSTRATES).

SHEET 22: TYPICAL ELEVATIONS FOR DOOR ADJACENT TO FG-5000 & FG-5100 ALUM. WINDOW WALL SYSTEM FRAMING, TO EXISTING STRUCTURE AND TO HR-250 & HR-251 CAPTURED CURTAIN WALL SYSTEM FRAMING AND PERIMETER FRAME FASTENER LOCATIONS (TYPICAL INSTALLATION INTO STEEL SUBSTRATE).

SHEET 23: TYPICAL ELEVATIONS FOR DOOR ADJACENT TO FG-5000 & FG-5100 ALUM. WINDOW WALL SYSTEM FRAMING, TO EXISTING STRUCTURE AND TO HR-250 & HR-251 CAPTURED CURTAIN WALL SYSTEM FRAMING AND PERIMETER FRAME FASTENER LOCATIONS (TYPICAL INSTALLATION INTO WOOD SUBSTRATE).

SHEET 24: STANDARD HARDWARE LOCATIONS FOR SERIES MSD-375 IMPACT DOORS (WET GLAZED).

FLORIDA BUILDING CODE (High Velocity Hurricane Zone)

©2010 TILTECO, INC

TILTECO INC.
TILLIT TESTING & ENGINEERING COMPANY
6355 N.W. 36th. St., Ste. 305, VIRGINIA GARDENS, FL 33166
Phone : (305)871-1530 . Fax : (305)871-1531
e-mail: tilteco@aol.com
EB-0006719
WALTER A. TILLIT Jr. P.E.
FLORIDA Lic. # 44167

L.G./M.C.V. DRAWN BY:

12/06/10 DATE

10-078 DRAWING No

SHEET 1 OF 24

SERIES MSD-375 ALUMINUM MEDIUM STILE ENTRANCE DOOR (WET GLAZED) LARGE & SMALL MISSILE IMPACT

Oldcastle BuildingEnvelope™
803 Airport Rd - Terrell, TX 75160
www.OldcastleBE.com - Phone 800-869-4567

REV. No	DESCRIPTION	DATE	REV. No	DESCRIPTION	DATE
1	OLD DWG 09-205	12/06/10	3		
2			4		

WALTER A. TILLIT JR. LICENSE No. 44167 STATE OF FLORIDA PROFESSIONAL ENGINEER

P.E. SIGNATURE DATE

PRODUCT REVISED as complying with the Florida Building Code Acceptance No 10-1214.16 Expiration Date 02/17/2015 By Miami Dade Product Control

MIAMI-DADE COUNTY

SERIES MSD-375 ALUMINUM MEDIUM STILE ENTRANCE DOORS (WET GLAZED) COMPONENTS

SCALE: 3/8" = 1"

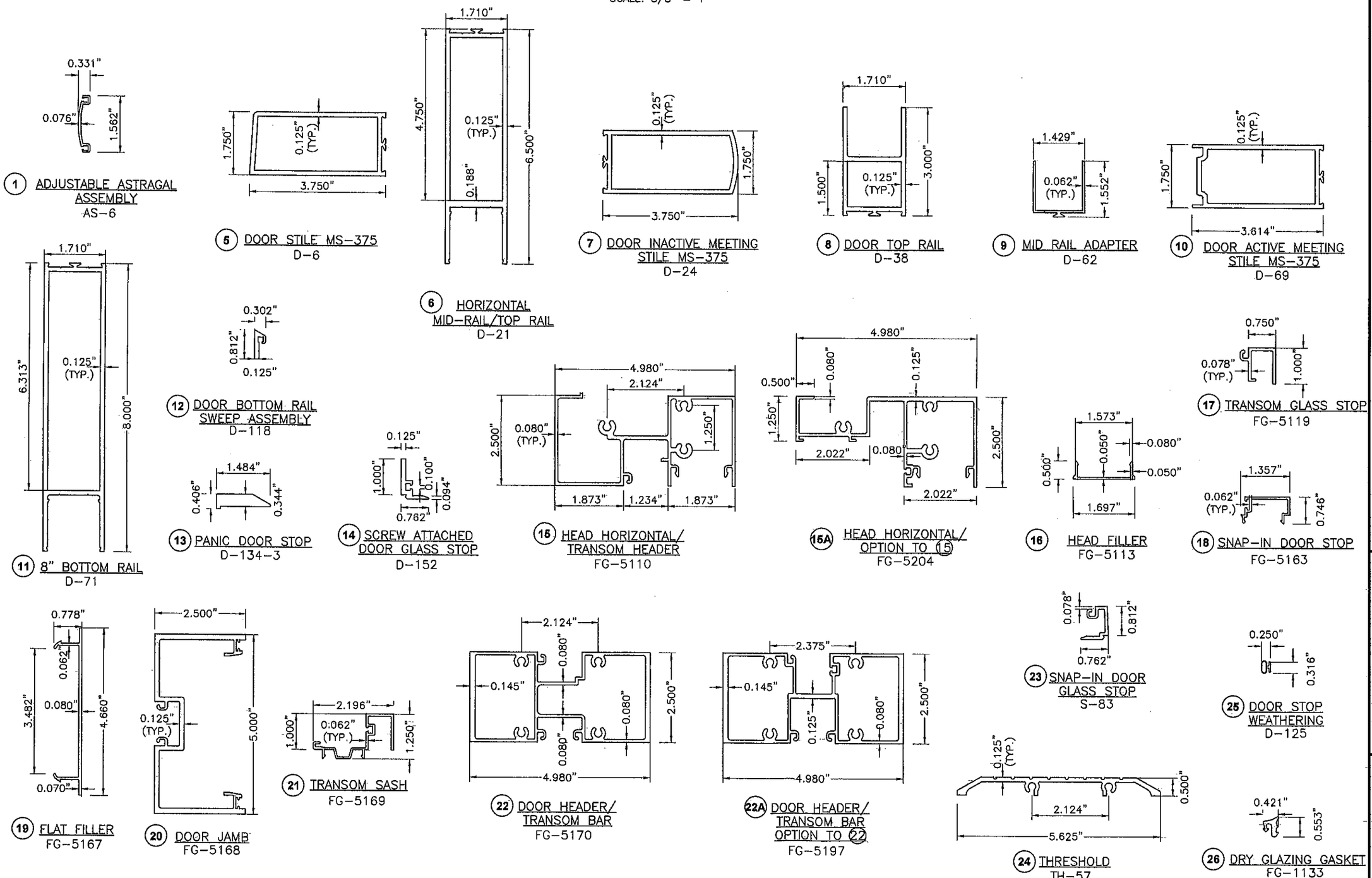

FLORIDA BUILDING CODE (High Velocity Hurricane Zone)

L.G./M.C.V. DRAWN BY:

12/06/10 DATE

10-078 DRAWING No

SHEET 2 OF 24

SERIES MSD-375 ALUMINUM MEDIUM STILE ENTRANCE DOOR (WET GLAZED) LARGE & SMALL MISSILE IMPACT

Oldcastle BuildingEnvelope™

803 Airport Rd - Terrell, TX 75160
www.OldcastleBE.com - Phone 800-869-4567

REV. No	DESCRIPTION	DATE	REV. No	DESCRIPTION	DATE
1	OLD DWG 09-205	12/06/10	3		
2			4		

©2010 TILTECO, INC

TILTECO INC.
TILLIT TESTING & ENGINEERING COMPANY
6355 N.W. 36th. St., Ste. 305, VIRGINIA GARDENS, FL 33166
Phone : (305)871-1530 . Fax : (305)871-1531
e-mail: tilteco@aol.com
EB-0006719
WALTER A. TILLIT Jr. P.E.
FLORIDA Lic. # 44167

WALTER A. TILLIT JR. LICENSE No. 44167 STATE OF FLORIDA PROFESSIONAL ENGINEER

SIGNATURE DATE

P.E.

PRODUCT REVISED
as complying with the Florida Building Code.
Acceptance No 10-1214.16
Expiration Date 02/13/2015
By Miami Dade Product Control

MIAMI-DADE COUNTY

SERIES MSD-375 ALUMINUM MEDIUM STILE ENTRANCE DOORS (WET GLAZED) COMPONENTS (CONTINUED)

SCALE: 3/8" = 1"

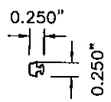

35 SPACER GASKET
FG-5188

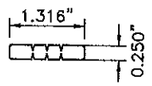

36 SETTING BLOCK
HP-17

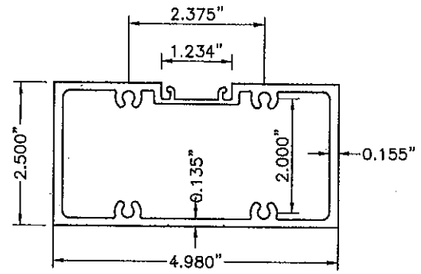

42 DOOR HEADER-OFFSET ARM
FG-5172

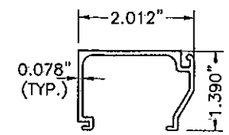

47 GLASS STOP
FG-5190

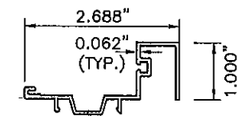

50 TRANSOM SASH
FG-5181

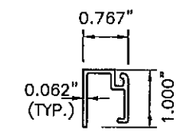

52 TRANSOM GLASS STOP
FG-5182

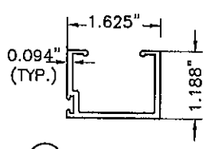

53 DOOR STOP
DS-104

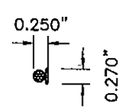

56 BULB GASKET FOR FILLER
CW-998

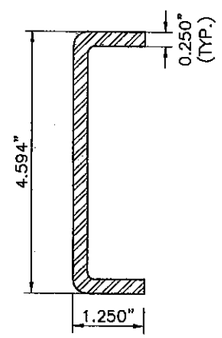

57 DOOR JAMB STEEL REINFORCEMENT
FG-5000-PP-8

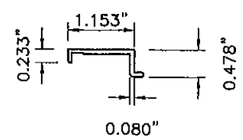

60 ANCHOR PLATE
FG-5000-FP-17
8" LONG

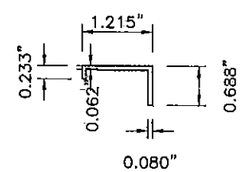

61 ANCHOR PLATE
FG-5000-FP-18
8" LONG

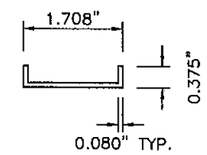

62 ANCHOR PLATE
FG-5000-FP-19
8" LONG

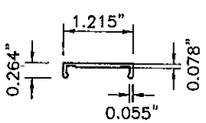

63 ANCHOR PLATE
FG-5000-FP-20
8" LONG

FLORIDA BUILDING CODE (High Velocity Hurricane Zone)

©2010 TILTECO, INC

TILTECO INC.
TILLIT TESTING & ENGINEERING COMPANY
6355 N.W. 36th. St., Ste. 305, VIRGINIA GARDENS, FL 33166
Phone : (305)871-1530 . Fax : (305)871-1531
e-mail: tilteco@aol.com
EB-0006719
WALTER A. TILLIT Jr. P.E.
FLORIDA Lic. # 44167

SERIES MSD-375 ALUMINUM MEDIUM STILE ENTRANCE DOOR (WET GLAZED) LARGE & SMALL MISSILE IMPACT

Oldcastle BuildingEnvelope™
803 Airport Rd - Terrell, TX 75160
www.OldcastleBE.com - Phone 800-869-4567

REV. No	DESCRIPTION	DATE	REV. No	DESCRIPTION	DATE
1	OLD DWG 09-205	12/06/10	3		
2			4		

L.G./M.C.V.
DRAWN BY:

12/06/10
DATE

10-078
DRAWING No

SHEET 3 OF 24

WALTER A. TILLIT JR. LICENSE No. 44167 STATE OF FLORIDA PROFESSIONAL ENGINEER

P.E. SEAL SIGNATURE/DATE

PRODUCT REVISED
as complying with the Florida Building Code
Acceptance No 10-1214.16
Expiration Date 02/17/2015
By [signature]
Miami Dade Product Control

MIAMI-DADE COUNTY

BILL OF MATERIALS

ITEM No.	PART NUMBER	DESCRIPTION	DIMENSIONS	MATERIAL	MANUFACTURER	NOTES
1.	AS-6	ADJUSTABLE ASTRAGAL ASSEMBLY	.331" X 1.562" X .062"	6063-T6 ALUMINUM	OBE	
2.	CB-21	CORNER BLOCK	2.130" X 1.44" X .25"	6063-T5 ALUMINUM	OBE	4.437" LONG
3.	CB-38	DOOR CORNER BLOCK	2.130" X 1.44" X .25"	6063-T5 ALUMINUM	OBE	1.23" LONG
4.	CB-71	DOOR CORNER BLOCK	2.130" X 1.44" X .25"	6063-T5 ALUMINUM	OBE	6" LONG
5.	D-6	DOOR STILE MS-375	3.75" X 1.75" X .125"	6063-T5 ALUMINUM	OBE	
6.	D-21	HORIZONTAL MID-RAIL/TOP RAIL	6.50" X 1.71" X .125"	6063-T5 ALUMINUM	OBE	
7.	D-24	DOOR INACTIVE MEETING STILE MS-375	3.75" X 1.75" X .125"	6063-T5 ALUMINUM	OBE	
8.	D-38	DOOR TOP RAIL	3.00" X 1.71" X .125"	6063-T5 ALUMINUM	OBE	
9.	D-62	MID-RAIL ADAPTER	1.429" X 1.552" X .062"	6063-T5 ALUMINUM	OBE	
10.	D-69	DOOR ACTIVE MEETING STILE MS-375	3.614" X 1.75" X .125"	6063-T5 ALUMINUM	OBE	
11.	D-71	8" BOTTOM RAIL	8.00" X 1.71" X .125"	6063-T6 ALUMINUM	OBE	
12.	D-118	DOOR BOTTOM RAIL SWEEP ASSEMBLY	.812" X .302" X .125"	6063-T5 ALUMINUM	OBE	CUT TO DOOR WIDTH MINUS 5/8"
13.	D-134-3	PANIC DOOR STOP	.344" X 1.484" X 3.00" LONG	6063-T5 ALUMINUM	OBE	
14.	D-152	SCREW ATTACHED DOOR GLASS STOP	1.00" X .762" X .125"	6063-T6 ALUMINUM	OBE	ATTACH 12" ON CENTER
15.	FG-5110	HEAD HORIZONTAL/TRANSOM HEADER	2.50" X 4.98" X .080"	6063-T6 ALUMINUM	OBE	
15A.	FG-5204	HEAD HORIZONTAL/TRANSOM HEADER, OPTION TO (15)	2.50" X 4.98" X .080"	6063-T6 ALUMINUM	OBE	
16.	FG-5113	HEAD FILLER	.50" X 1.70" X .050"	6063-T5 ALUMINUM	OBE	
17.	FG-5119	TRANSOM GLASS STOP	1.00" X .75" X .078"	6063-T6 ALUMINUM	OBE	
18.	FG-5163	SNAP-IN DOOR STOP	.746" X 1.357" X .062"	6063-T6 ALUMINUM	OBE	
19.	FG-5167	FLAT FILLER	.78" X 4.66" X .080"	6063-T6 ALUMINUM	OBE	RUNS FULL LENGTH
20.	FG-5168	DOOR JAMB	2.50" X 5.0" X .125"	6063-T6 ALUMINUM	OBE	
21.	FG-5169	TRANSOM SASH	1.0" X 2.196" X .062"	6063-T6 ALUMINUM	OBE	
22.	FG-5170	DOOR HEADER/TRANSOM BAR	2.50" X 4.98" X .080"	6063-T6 ALUMINUM	OBE	
22A.	FG-5197	DOOR HEADER/TRANSOM BAR, OPTION TO (22)	2.50" X 4.98" X .080"	6063-T6 ALUMINUM	OBE	
23.	S-83	SNAP-IN DOOR GLASS STOP	.812" X .762" X .078"	6063-T6 ALUMINUM	OBE	
24.	TH-57	THRESHOLD	.50" X 5.625" X .125"	6063-T5 ALUMINUM	OBE	
25.	D-125	DOOR STOP WEATHERING	.125" SPACE	SANTOPRENE	UNIVERSAL RUBBER	
26.	FG-1133	DRY GLAZING GASKET	.197" SPACE	EPDM	VARIES	70 DUROMETER
27.	FS-2	ATTACH D-118 SWEEP TO DOOR BOTTOM	#8 X 3/8" PPHSMS	STEEL	VARIES	
28.	FS-7	ATTACH RAILS TO CORNER BLOCKS	#10 X 3/4" PFH	STEEL	VARIES	
29.	FS-8	SPLINE ASSEMBLY SCREW	#14 X 1" HHSTS	STEEL	VARIES	
30.	FS-114	ATTACH D-152 TO DOOR	#8 X 3/8" PPHSMS	STEEL	VARIES	
31.	SM-5601	JOINT SEALANT TAPE	.125" X .50" VARIES	BUTYL	SCHNEE-MOREHEAD	
32.	WP-085	ADJUSTABLE ASTRAGAL WEATHERING	VARIABLE SPACE	WOOL PILE	SCHLEGEL	
33.	FS-56	ATTACH D-134-2 PANIC STOP	#12 X 3/4" PFHSMS	STEEL	VARIES	
34.	FS-49	ADJUSTABLE ASTRAGAL SCREW	#8 X 1/2" PPHSMS	STEEL	VARIES	
35.	FG-5188	SPACER GASKET	.25" X .25"	EPDM	VARIES	85 DUROMETER
36.	HP-17	SETTING BLOCK	1.316" X 1/4" X 4" LONG	EPDM	VARIES	90 DUROMETER

FLORIDA BUILDING CODE (High Velocity Hurricane Zone)

L.G./M.C.V. DRAWN BY:

12/06/10 DATE

10-078 DRAWING No

SHEET 4 OF 24

SERIES MSD-375 ALUMINUM MEDIUM STILE ENTRANCE DOOR (WET GLAZED)
LARGE & SMALL MISSILE IMPACT

Oldcastle BuildingEnvelope™
803 Airport Rd - Terrell, TX 75160
www.OldcastleBE.com - Phone 800-869-4567

REV. No	DESCRIPTION	DATE	REV. No	DESCRIPTION	DATE
1	OLD DWG 09-205	12/06/10	3		
2			4		

©2010 TILTECO, INC

TILTECO INC.
TILLIT TESTING & ENGINEERING COMPANY
6355 N.W. Josh. St., Ste. 305, VIRGINIA GARDENS, FL 33166
Phone : (305)871-1530 . Fax : (305)871-1531
e-mail: titteco@aol.com
EB-0006719
WALTER A. TILLIT Jr. P.E.
FLORIDA Lic. # 44167

WALTER A. TILLIT JR. LICENSE No. 44167 STATE OF FLORIDA PROFESSIONAL ENGINEER

P.E. SIGNATURE/DATE

PRODUCT REVISED
as complying with the Florida Building Code
Acceptance No 18-2114.16
Expiration Date 02/17/2015
By
Miami Dade Product Control

MIAMI-DADE COUNTY

BILL OF MATERIALS (CONTINUED)

ITEM No.	PART NUMBER	DESCRIPTION	DIMENSIONS	MATERIAL	MANUFACTURER	NOTES
37.	995 SEALANT	STRUCTURAL SILICONE	FILL SPACE	SILICONE	DOW CORNING	
38.	921	USED AS PERIMETER SEALANT	FILL SPACE	POLYURETHANE	VULKEM	
39.	V-2110	INTERIOR SSA GLAZING TAPE	5/16" X 5/16"	THERMAL BOND	NORTON	
40.	FS-39	ATTACH CORNER BLOCK TO STILES	1/4" X 20 X 3/4": HHMS	STEEL	VARIES	
41.	FG-5000-PP1	DOOR SETTING BLOCK	1/8" X 3/4" X 4"	EPDM	VARIES	
42.	FG-5172	DOOR HEADER-OFFSET ARM	2.50" X 4.98" X .135"	6063-T6 ALUMINUM	OBE	
43.	DS-104	OFFSET ARM COVER	1.188" X 1.625" X .094"	6063-T6 ALUMINUM	OBE	
44.	FASTENER	ATTACH DS-104 TO FG-5172	#10 X 2" FHPSMS	STEEL	VARIES	SINGLE DOOR: 1 EA. 6" FROM LOCK STILE PAIR OF DRS: 1 EA. 6" EACH SIDE OF DR C/L
45.	D-120	DOOR WEATHERING STRIP	VARIABLE SPACE	VINYL	OBE	DOOR WIDTH MINUS 5/8"
46.	FG-5185	SPACER GASKET	.25" X .25"	SILICONE	VARIES	
47.	FG-5190	GLASS STOP	2.01" X 1.39" X .080"	6063-T6 ALUMINUM	OBE	
50.	FG-5181	TRANSOM SASH	1.00" X 2.69" X .062"	6063-T5 ALUMINUM	OBE	
51.	FS-55	ATTACH SC-1 CLIP	#10 X 1/2" PH ROUND	STEEL	VARIES	9" O.C.
52.	FG-5182	TRANSOM GLASS STOP	1.00" X .767" X .062"	6063-T5 ALUMINUM	OBE	
53.	DS-104	DOOR STOP	1.625" X 1.188" X .094"	6063-T5 ALUMINUM	OBE	USES SC-1 CLIP
56.	CW 998	BULB GASKET FOR FILLER	VARIES	FOAM-TITE	AMESBURY	
57.	FG-5000-PP-8	DOOR JAMB STL REINFORCING	1 1/4" X 4 9/16" X 1/4"	A-36 STEEL	VARIES	FULL LENGTH OF MULLION. COAT RICH PRIMER
58.	FS-38	ATTACH STL. REINFORCEMENT	1/4"-20 X 1/2" HH TYPE "F"	STEEL	VARIES	
59.	SC-1	STAINLESS STEEL CLIP	.281" X .968" X .032"	STAINLESS STEEL	OBE	9" O.C.
60	FG-5000-FP-17	ANCHOR PLATE	1.153" X .478" X .080"X 8" LONG	6063-T5 ALUMINUM	OBE	USED @ 22A.
61.	FG-5000-FP-18	ANCHOR PLATE	1.215" X .688" X .080"X 8" LONG	6063-T6 ALUMINUM	OBE	USED @ 22
62.	FG-5000-FP-19	ANCHOR PLATE	.1.708" X .375" X .080"X 8" LONG	6063-T5 ALUMINUM	OBE	USED @ 24
63.	FG-5000-FP-20	ANCHOR PLATE	.1.215" X .264" X .078"X 8" LONG	6063-T5 ALUMINUM	OBE	USED @ 42

FLORIDA BUILDING CODE (High Velocity Hurricane Zone)

SERIES MSD-375 ALUMINUM MEDIUM STILE ENTRANCE DOOR (WET GLAZED) LARGE & SMALL MISSILE IMPACT

L.G./M.C.V. DRAWN BY:

12/06/10 DATE

10-078 DRAWING No

SHEET 5 OF 24

Oldcastle BuildingEnvelope™
803 Airport Rd - Terrell, TX 75160
www.OldcastleBE.com - Phone 800-869-4567

REV. No	DESCRIPTION	DATE	REV. No	DESCRIPTION	DATE
1	OLD DWG 09-205	12/06/10	3		
2			4		

©2010 TILTECO, INC

TILTECO INC.
TILLIT TESTING & ENGINEERING COMPANY
6355 N.W. 36th. St., Ste. 305, VIRGINIA GARDENS, FL 33166
Phone : (305)871-1530 , Fax : (305)871-1531
e-mail: tilteco@aol.com
EB-0006719
WALTER A. TILLIT Jr. P.E.
FLORIDA Lic. # 44167

WALTER A. TILLIT JR. LICENSE No. 44167 STATE OF FLORIDA PROFESSIONAL ENGINEER

P.E. SEAL/SIGNATURE/DATE

PRODUCT REVISED
as complying with the Florida
Building Code
Acceptance No 10-1214.16
Expiration Date 02/17/2015
By
Miami Dade Product Control

MIAMI-DADE COUNTY

HARDWARE SCHEDULES

APPROVAL: DADE COUNTY					DOOR MARK	DOOR: TYP.		ELEV: TYP.
IMPACT	X	NOA			DOOR SIZE	3'-6" X 8'-0" SINGLE		
		DOOR HINGING			LOCKING DEVICE:		SERIES	NOTES:
DOOR TYPE		B.H.	C.G.H.	O.P.	ADAMS-RITE	X	1850-505	3-POINT LOCK
MS-375	X	X	X	X	EXIT DEVICES:		SERIES	NOTES:
					VON DUPRIN	-0-	9927	SURFACE PANIC
					VON DUPRIN	-0-	9947	CONCEALED PANIC
					JACKSON	-0-	2086	CONCEALED PANIC
					JACKSON	-0-	1286	CONCEALED PANIC
					SARGENT	X	8410	CONCEALED PANIC

HARDWARE DESCRIPTION	PART NUMBER	QTY	MANUFACTURER	USED
CLOSER OPTIONS: SURFACE MOUNTED	VARIES	1	VARIES	X
CONCEALED OVERHEAD	21-2111 HVY DUTY WITH OFFSET SLIDE-ARM	1	JACKSON	X
BUTT HINGE 4 1/2" X 4"	BH-1M	3	REGENT	X
PULL HANDLE	PH-10	1	OGEP	X
PUSH BAR	PB-11	1	OGEP	X
CYLINDER (ACTIVE)	CY-1	1	OGEP	X
THUMB TURN (ACTIVE) OPTIONAL	CY-3	1	OGEP	X
CYLINDER (ACTIVE) FOR VON DUPRIN EXIT	CY-5		OGEP	-0-
LOCK (ACTIVE)	AR-1850-505-3PT	1	ADAMS-RITE	X
LOCK INDICATOR (ACTIVE) OPTIONAL	AR-4089	1	ADAMS-RITE	X
FLUSH BOLT (INACTIVE)	FB-1201-VRM		INTERNATIONAL	-0-
FLUSH BOLT (INACTIVE)	FB-1201-VRM-96		INTERNATIONAL	-0-
PANIC STOP	D-134-2	1	OGEP	-0-
THRESHOLD	TH-57	1	OGEP	X
DOOR BOTTOM SWEEP	D118/D120	1	OGEP	X
OPTIONAL HINGE: TOP PIVOTS	OP-6 & OP-7	1	INTERNATIONAL	X
INTERMIDIATE PIVOT	M-19	1	RIXON	X
BOTTOM PIVOT	OP-9 & OP-10	1	INTERNATIONAL	X
CONTINUOUS GEAR HINGE	224 HD	1	ROTON	X
OPTIONAL THRESHOLD	TH-43	1	OGEP	X

APPROVAL: DADE COUNTY					DOOR MARK	DOOR: TYP.		ELEV: TYP.
IMPACT	X	NOA			DOOR SIZE	3'-6" X 8'-0" SINGLE		
		DOOR HINGING			LOCKING DEVICE:		SERIES	NOTES:
DOOR TYPE		B.H.	C.G.H.	O.P.	ADAMS-RITE	-0-	1850-505	3-POINT LOCK
MS-375	X	X	X	X	EXIT DEVICES:		SERIES	NOTES:
					VON DUPRIN	X	9927	SURFACE PANIC
					VON DUPRIN	X	9947	CONCEALED PANIC
					JACKSON	X	2086	CONCEALED PANIC
					JACKSON	X	1286	CONCEALED PANIC
					SARGENT	X	8410	CONCEALED PANIC

HARDWARE DESCRIPTION	PART NUMBER	QTY	MANUFACTURER	USED
CLOSER OPTIONS: SURFACE MOUNTED	VARIES	1	VARIES	X
CONCEALED OVERHEAD	21-2111 HVY DUTY WITH OFFSET SLIDE-ARM	1	JACKSON	X
BUTT HINGE 4 1/2" X 4"	BH-1M	3	REGENT	X
PULL HANDLE	PH-10	1	OGEP	X
PUSH BAR	PB-11		OGEP	-0-
CYLINDER FOR JACKSON (ACTIVE)	CY-1	1	OGEP	X
KEY CONTROL (ACTIVE) FOR SARGENT	106	1	SARGENT	X
CYLINDER (ACTIVE) FOR VON DUPRIN EXIT	CY-5	1	OGEP	X
LOCK (ACTIVE)	AR-1850-505-3PT	1	ADAMS-RITE	-0-
LOCK INDICATOR (ACTIVE) OPTIONAL	AR-4089		ADAMS-RITE	-0-
FLUSH BOLT (INACTIVE)	FB-1201-VRM		INTERNATIONAL	-0-
FLUSH BOLT (INACTIVE)	FB-1201-VRM-96		INTERNATIONAL	-0-
PANIC STOP	D-134-2	1	OGEP	-0-
THRESHOLD	TH-57	1	OGEP	X
DOOR BOTTOM SWEEP	D118/D120	1	OGEP	X
OPTIONAL HINGE: TOP PIVOTS	OP-6 & OP-7	1	INTERNATIONAL	X
INTERMIDIATE PIVOT	M-19	1	RIXON	X
BOTTOM PIVOT	OP-9 & OP-10	1	INTERNATIONAL	X
CONTINUOUS GEAR HINGE	224 HD	1	ROTON	X
OPTIONAL THRESHOLD	TH-43	1	OGEP	X

X = APPLIES
-0- = NOT APPLICABLE

FLORIDA BUILDING CODE (High Velocity Hurricane Zone)

SERIES MSD-375 ALUMINUM MEDIUM STILE ENTRANCE DOOR (WET GLAZED) LARGE & SMALL MISSILE IMPACT

Oldcastle BuildingEnvelope™
803 Airport Rd - Terrell, TX 75160
www.OldcastleBE.com - Phone 800-869-4567

REV. No	DESCRIPTION	DATE	REV. No	DESCRIPTION	DATE
1	OLD DWG 09-205	12/06/10	3		
2			4		

L.G./M.C.V. DRAWN BY:
12/06/10 DATE
10-078 DRAWING No
SHEET 6 OF 24

©2010 TILTECO, INC

TILTECO INC.
TILLIT TESTING & ENGINEERING COMPANY
6355 N.W. 36th. St., Ste. 305, VIRGINIA GARDENS, FL 33166
Phone : (305)871-1530 . Fax : (305)871-1531
e-mail: titeco@aol.com
EB-0006719
WALTER A. TILLIT Jr. P.E.
FLORIDA Lic. # 44167

WALTER A. TILLIT JR. LICENSE No. 44167 STATE OF FLORIDA PROFESSIONAL ENGINEER

P.E. SIGNATURE DATE

PRODUCT REVISED
as complying with the Florida Building Code
Acceptance No 10-1214.16
Expiration Date 02-17-2015
By Miami Dade Product Control

MIAMI-DADE COUNTY

HARDWARE SCHEDULES

APPROVAL: DADE COUNTY					DOOR MARK	DOOR: TYP.		ELEV: TYP.
IMPACT	×	NOA			DOOR SIZE	7'-0" X 8'-0" PAIR		
		DOOR HINGING			LOCKING DEVICE:		SERIES	NOTES:
DOOR TYPE		B.H.	C.G.H.	O.P.	ADAMS-RITE	×	1850-505	3-POINT LOCK
MSD-375	×	×	×	×	EXIT DEVICES:		SERIES	NOTES:
					VON DUPRIN	⊖	9927	SURFACE PANIC
					VON DUPRIN	⊖	9947	CONCEALED PANIC
					JACKSON	⊖	2086	CONCEALED PANIC
					JACKSON	⊖	1286	CONCEALED PANIC
					SARGENT	×	8410	CONCEALED PANIC

HARDWARE DESCRIPTION	PART NUMBER	QTY	MANUFACTURER	USED
CLOSER OPTIONS: SURFACE MOUNTED	VARIES	2	VARIES	×
CONCEALED OVERHEAD	21-2111 HVY DUTY WITH OFFSET SLIDE-ARM	2	JACKSON	×
BUTT HINGE 4 1/2" X 4"	BH-1M	6	REGENT	×
PULL HANDLE	PH-10	2	OGEP	×
PUSH BAR	PB-11	2	OGEP	×
CYLINDER (ACTIVE)	CY-1	1	OGEP	×
THUMB TURN (ACTIVE) OPTIONAL	CY-3	1	OGEP	×
CYLINDER (ACTIVE) FOR VON DUPRIN EXIT	CY-5		OGEP	⊖
LOCK (ACTIVE)	AR-1850-505-3PT	1	ADAMS-RITE	×
LOCK INDICATOR (ACTIVE) OPTIONAL	AR-4089	1	ADAMS-RITE	×
FLUSH BOLT (INACTIVE)	FB-1201-VRM	1	INTERNATIONAL	×
FLUSH BOLT (INACTIVE)	FB-1201-VRM-96	1	INTERNATIONAL	×
PANIC STOP	D-134-2	1	OGEP	×
THRESHOLD	TH-57	1	OGEP	×
DOOR BOTTOM SWEEP	D118/D120	2	OGEP	×
OPTIONAL HINGE: TOP PIVOTS	OP-6 & OP-7	2	INTERNATIONAL	×
INTERMIDIATE PIVOT	M-19	2	RIXON	×
BOTTOM PIVOT	OP-9 & OP-10	2	INTERNATIONAL	×
CONTINUOUS GEAR HINGE	224 HD	2	ROTON	×
OPTIONAL THRESHOLD	TH-43	1	OGEP	×

APPROVAL: DADE COUNTY					DOOR MARK	DOOR: TYP.		ELEV: TYP.
IMPACT	×	NOA			DOOR SIZE	7'-0" X 8'-0" PAIR		
		DOOR HINGING			LOCKING DEVICE:		SERIES	NOTES:
DOOR TYPE		B.H.	C.G.H.	O.P.	ADAMS-RITE	⊖	1850-505	3-POINT LOCK
MSD-375	×	×	×	×	EXIT DEVICES:		SERIES	NOTES:
					VON DUPRIN	×	9927	SURFACE PANIC
					VON DUPRIN	×	9947	CONCEALED PANIC
					JACKSON	×	2086	CONCEALED PANIC
					JACKSON	×	1286	CONCEALED PANIC
					SARGENT	×	8410	CONCEALED PANIC

HARDWARE DESCRIPTION	PART NUMBER	QTY	MANUFACTURER	USED
CLOSER OPTIONS: SURFACE MOUNTED	VARIES	2	VARIES	×
CONCEALED OVERHEAD	21-2111 HVY DUTY WITH OFFSET SLIDE-ARM	2	JACKSON	×
BUTT HINGE 4 1/2" X 4"	BH-1M	6	REGENT	×
PULL HANDLE	PH-10	2	OGEP	×
PUSH BAR	PB-11		OGEP	⊖
CYLINDER FOR JACKSON (ACTIVE)	CY-1	1	OGEP	×
KEY CONTROL (ACTIVE) FOR SARGENT	106		SARGENT	×
CYLINDER (ACTIVE) FOR VON DUPRIN EXIT	CY-5		OGEP	×
LOCK (ACTIVE)	AR-1850-505-3PT		ADAMS-RITE	⊖
LOCK INDICATOR (ACTIVE) OPTIONAL	AR-4089		ADAMS-RITE	⊖
FLUSH BOLT (INACTIVE)	FB-1201-VRM		INTERNATIONAL	⊖
FLUSH BOLT (INACTIVE)	FB-1201-VRM-96		INTERNATIONAL	⊖
PANIC STOP	D-134-2	1	OGEP	×
THRESHOLD	TH-57	1	OGEP	×
DOOR BOTTOM SWEEP	D118/D120	2	OGEP	×
OPTIONAL HINGE: TOP PIVOTS	OP-6 & OP-7	2	INTERNATIONAL	×
INTERMIDIATE PIVOT	M-19	2	RIXON	×
BOTTOM PIVOT	OP-9 & OP-10	2	INTERNATIONAL	×
CONTINUOUS GEAR HINGE	224 HD	2	ROTON	×
OPTIONAL THRESHOLD	TH-43	1	OGEP	×

×=APPLIES
⊖=NOT APPLICABLE

FLORIDA BUILDING CODE (High Velocity Hurricane Zone)

SERIES MSD-375 ALUMINUM MEDIUM STILE ENTRANCE DOOR (WET GLAZED) LARGE & SMALL MISSILE IMPACT

Oldcastle BuildingEnvelope™
803 Airport Rd - Terrell, TX 75160
www.OldcastleBE.com - Phone 800-869-4567

REV. No	DESCRIPTION	DATE	REV. No	DESCRIPTION	DATE
1	OLD DWG 09-205	12/06/10	3		
2			4		

L.G./M.C.V. DRAWN BY:
12/06/10 DATE
10-078 DRAWING No
SHEET 7 OF 24

©2010 TILTECO, INC

TILTECO INC.
TILLIT TESTING & ENGINEERING COMPANY
6355 N.W. 36th. St., Ste. 305, VIRGINIA GARDENS, FL 33166
Phone : (305)871-1530, Fax : (305)871-1531
e-mail: tilteco@aol.com
EB-0006719
WALTER A. TILLIT Jr. P.E.
FLORIDA Lic. # 44167

WALTER A. TILLIT JR. LICENSE No. 44167 STATE OF FLORIDA PROFESSIONAL ENGINEER

P.E. SEAL AND SIGNATURE DATE

PRODUCT REVISED
as complying with the Florida Building Code
Acceptance No 10-1214.16
Expiration Date 02/17/2015
By Miami Dade Product Control

MIAMI-DADE COUNTY

TYPICAL GLAZING DETAILS

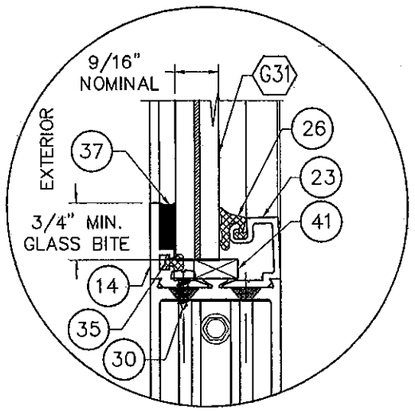

GLASS TYPE G31

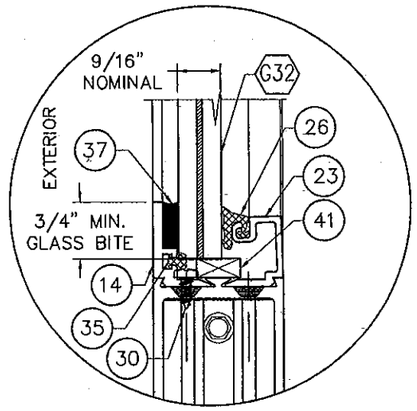

GLASS TYPE G32

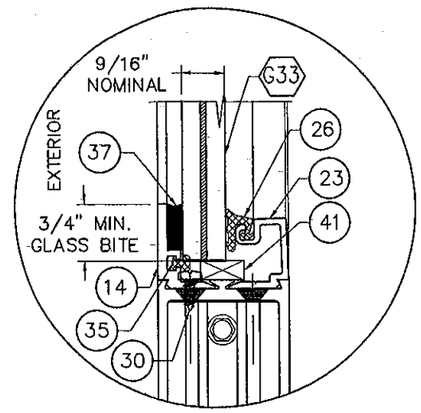

GLASS TYPE G33

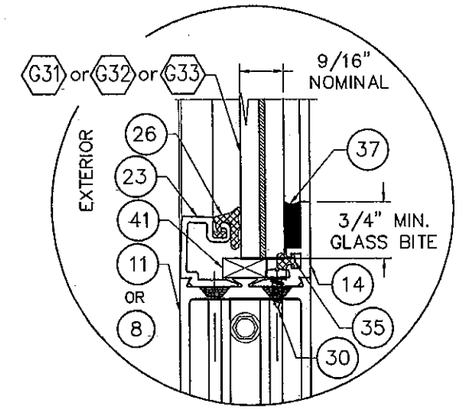

APPLICABLE ALTERNATE DETAIL WITH DOOR GLASS STOPS REVERSED FOR ALL GLASS TYPES

GLASS SCHEDULE

GLASS LABEL	GLASS COMPOSITION	INTERLAYER MANUFACTURER NAME	INTERLAYER'S NOA #	MAXIMUM D.L.O. (in)
G31	9/16" OVERALL THICKNESS LAMINATED GLASS CONSISTING OF TWO 1/4" H.S. GLASS, AND A 0.090" SAFLEX PVB INTERLAYER	SOLUTIA	06-0216.06	32 5/16" x 82 3/16"
G32	9/16" OVERALL THICKNESS LAMINATED GLASS CONSISTING OF TWO 1/4" H.S. GLASS, AND A 0.100" SAFLEX PVB INTERLAYER	SOLUTIA	06-0216.06	
G33	9/16" OVERALL THICKNESS LAMINATED GLASS CONSISTING OF TWO 1/4" H.S. GLASS, AND A 0.075" VANCEVA/STORMGLASS COMPOSITE INTERLAYER	SOLUTIA/ OLDCASTLE	08-1224.04/ 08-1118.07	

TYPICAL DOOR GLASS SIZE= DLO +1 1/2"

FLORIDA BUILDING CODE (High Velocity Hurricane Zone)

©2010 TILTECO, INC

SERIES MSD-375 ALUMINUM MEDIUM STILE ENTRANCE DOOR (WET GLAZED) LARGE & SMALL MISSILE IMPACT

Oldcastle BuildingEnvelope™
803 Airport Rd - Terrell, TX 75160
www.OldcastleBE.com - Phone 800-869-4567

REV. No	DESCRIPTION	DATE	REV. No	DESCRIPTION	DATE
1	OLD DWG 09-205	12/06/10	3		
2			4		

L.G./M.C.Y. DRAWN BY:
12/06/10 DATE
10-078 DRAWING No
SHEET 8 OF 24

TILTECO INC.
TILLIT TESTING & ENGINEERING COMPANY
6355 N.W. 36th St. Ste. 305, VIRGINIA GARDENS, FL 33166
Phone : (305)871-1530, Fax : (305)871-1531
e-mail: tilteco@aol.com
EB-0006719
WALTER A. TILLIT Jr. P.E.
FLORIDA Lic. # 44167

WALTER A. TILLIT JR. LICENSE No. 44167 STATE OF FLORIDA PROFESSIONAL ENGINEER

P.E. SIGNATURE/DATE

PRODUCT REVISED
as complying with the Florida Building Code
Acceptance No D-1214-06
Expiration Date 02/17/2015
By
Miami Dade Product Control

MIAMI-DADE COUNTY

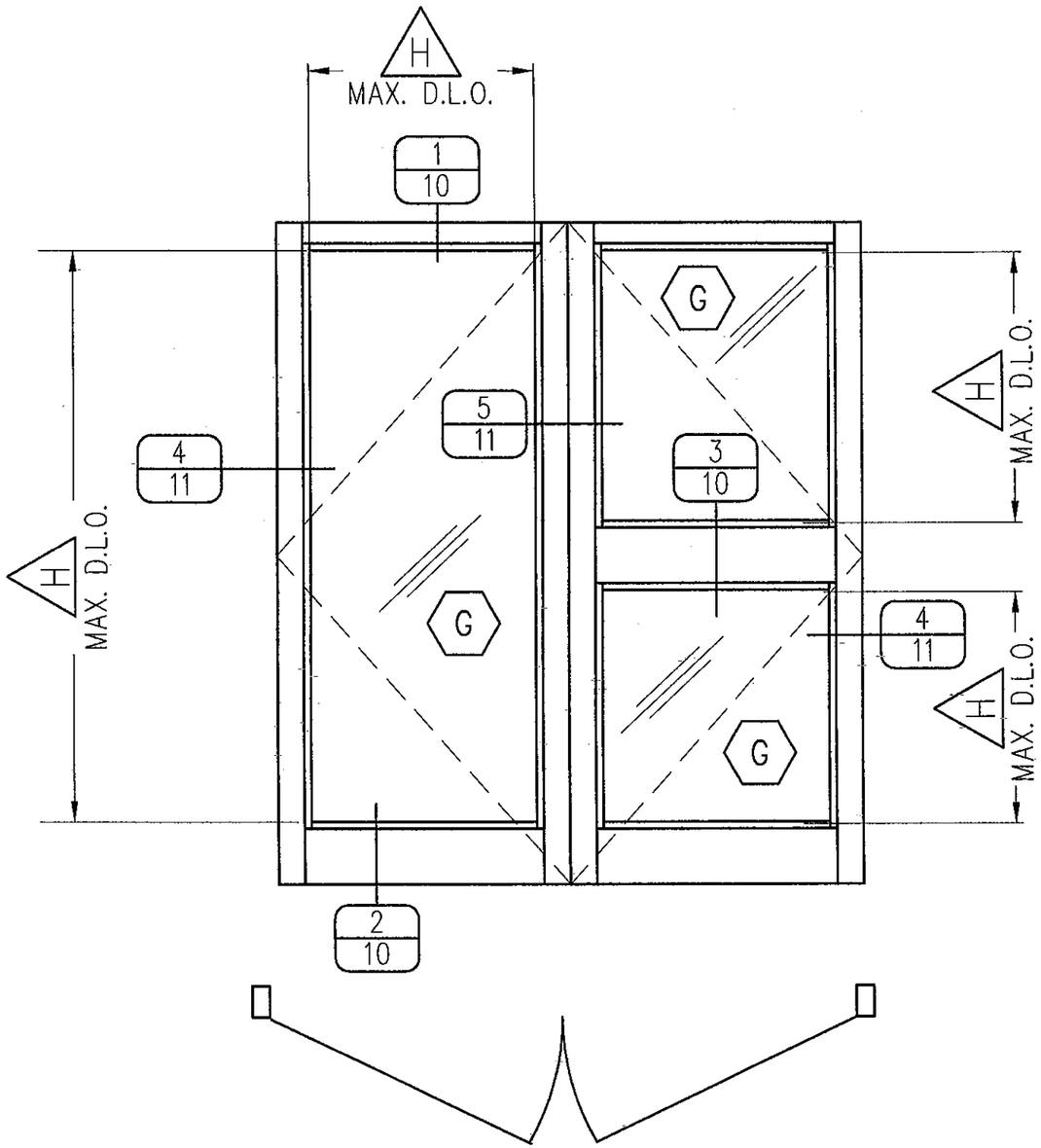

DOUBLE PANEL

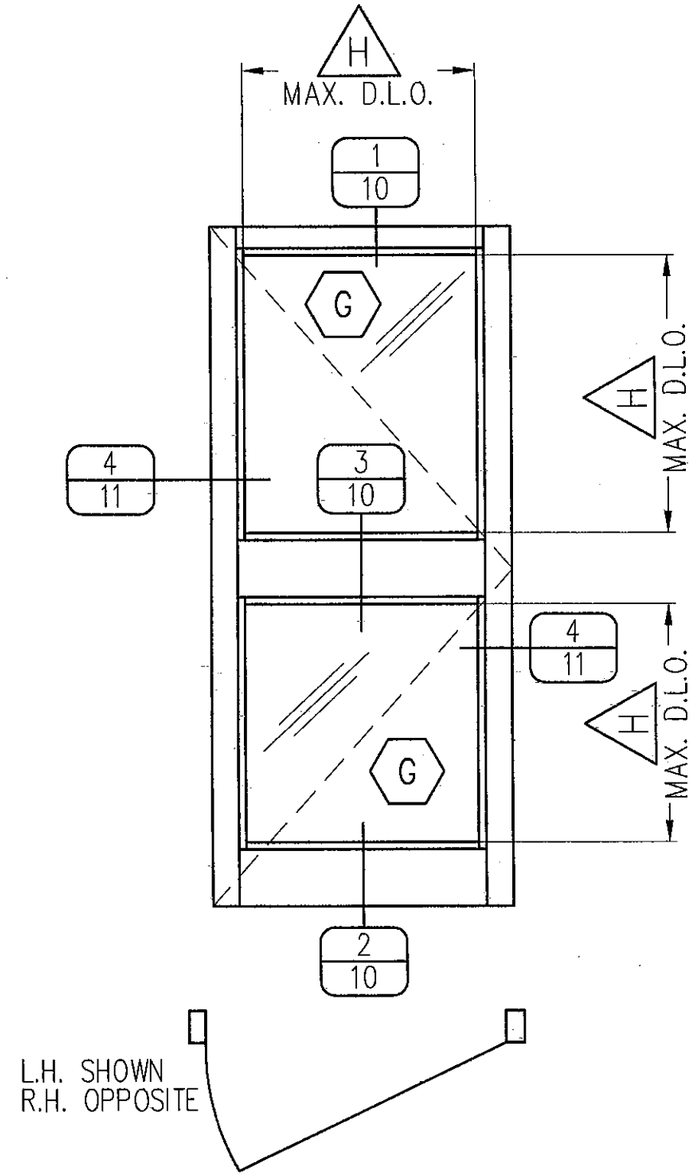

SINGLE PANEL

TYPICAL PANEL ELEVATIONS FOR MSD-375 IMPACT DOOR (WET GLAZED)

FOOT NOTES:

G FOR GLAZING DETAILS AND GLASS SCHEDULE SEE SHEET 8.

H FOR MAXIMUM DAYLIGHT OPENING (D.L.O.) SEE SCHEDULE ON SHEET 8.

FLORIDA BUILDING CODE (High Velocity Hurricane Zone)

©2010 TILTECO, INC

TILTECO INC.
TILLIT TESTING & ENGINEERING COMPANY
6355 N.W. 36th. St. Ste. 305, VIRGINIA GARDENS, FL 33166
Phone : (305)871-1530 ; Fax : (305)871-1531
e-mail: tilteco@aol.com
EB-0006719
WALTER A. TILLIT Jr. P.E.
FLORIDA Lic. # 44167

L.G./M.C.V. DRAWN BY:

12/06/10 DATE

10-078 DRAWING No

SHEET 9 OF 24

SERIES MSD-375 ALUMINUM MEDIUM STILE ENTRANCE DOOR (WET GLAZED) LARGE & SMALL MISSILE IMPACT

Oldcastle BuildingEnvelope™
803 Airport Rd - Terrell, TX 75160
www.OldcastleBE.com - Phone 800-869-4567

REV. No	DESCRIPTION	DATE	REV. No	DESCRIPTION	DATE
1	OLD DWG 09-205	12/06/10	3		
2			4		

WALTER A. TILLIT JR. LICENSE No. 44167 STATE OF FLORIDA PROFESSIONAL ENGINEER

P.E. SIGNATURE AND DATE

PRODUCT REVISED
as complying with the Florida Building Code
Acceptance No 10-1214.16
Expiration Date 02/17/2015
By Miami Dade Product Control

MIAMI-DADE COUNTY

DOOR'S TOP AND BOTTOM RAILS AND HORIZONTAL MID-RAIL DETAILS (SIDE VIEWS)

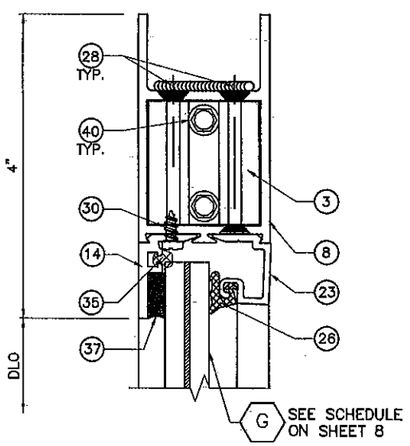

ALTERNATE 1

1
TOP RAIL

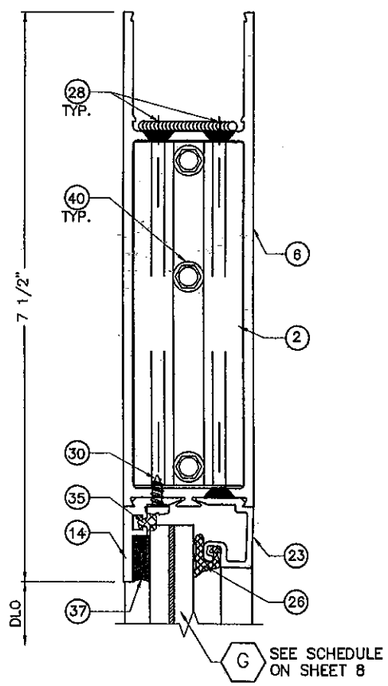

ALTERNATE 2

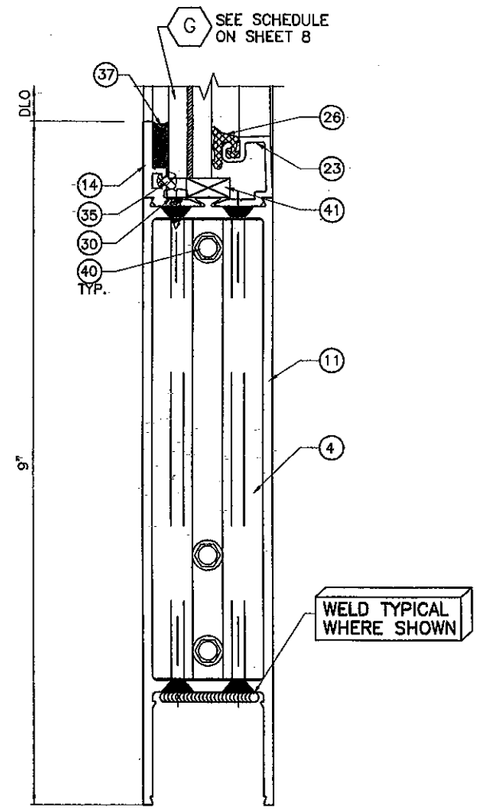

2
BOTTOM RAIL

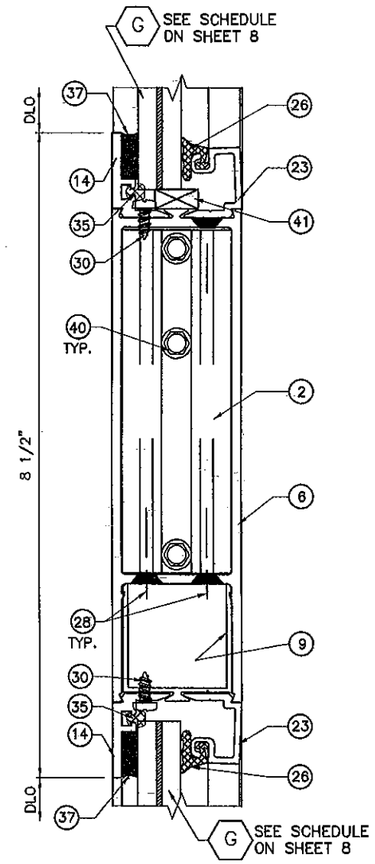

ALTERNATE 1

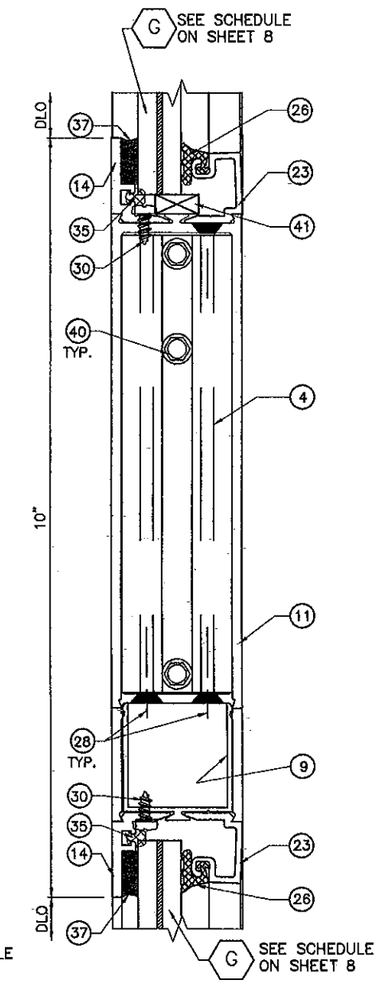

ALTERNATE 2

3
HORIZONTAL MID-RAIL

FLORIDA BUILDING CODE (High Velocity Hurricane Zone)

SERIES MSD-375 ALUMINUM MEDIUM STILE ENTRANCE DOOR (WET GLAZED) LARGE & SMALL MISSILE IMPACT

Oldcastle BuildingEnvelope™
803 Airport Rd - Terrell, TX 75160
www.OldcastleBE.com - Phone 800-869-4567

REV. No	DESCRIPTION	DATE	REV. No	DESCRIPTION	DATE
1	OLD DWG 09-205	12/06/10	3		
2			4		

L.G./M.C.V. DRAWN BY:
12/06/10 DATE
10-078 DRAWING No
SHEET 10 OF 24

©2010 TILTECO, INC

TILTECO INC.
TILLIT TESTING & ENGINEERING COMPANY
6355 N.W. 36th. St. Ste. 305, VIRGINIA GARDENS, FL 33166
Phone : (305)871-1530 . Fax : (305)871-1531
e-mail: tilteco@aol.com
EB-0006719
WALTER A. TILLIT Jr. P.E.
FLORIDA Lic. # 44167

WALTER A. TILLIT JR. LICENSE No. 44167 STATE OF FLORIDA PROFESSIONAL ENGINEER

P.E. SEAL/SIGNATURE/DATE

PRODUCT REVISED
as complying with the Florida
Building Code
Acceptance No 10-121.1-16
Expiration Date 02/17/2015
By
Miami Dade Product Control

MIAMI-DADE COUNTY

DOOR'S JAMB/MEETING STILES AND THRESHOLD CONNECTION DETAILS (PLAN VIEWS)

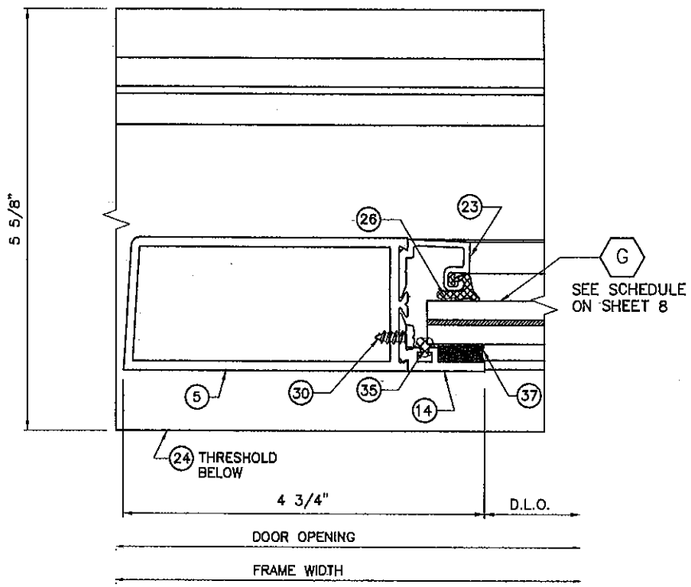

4
JAMB

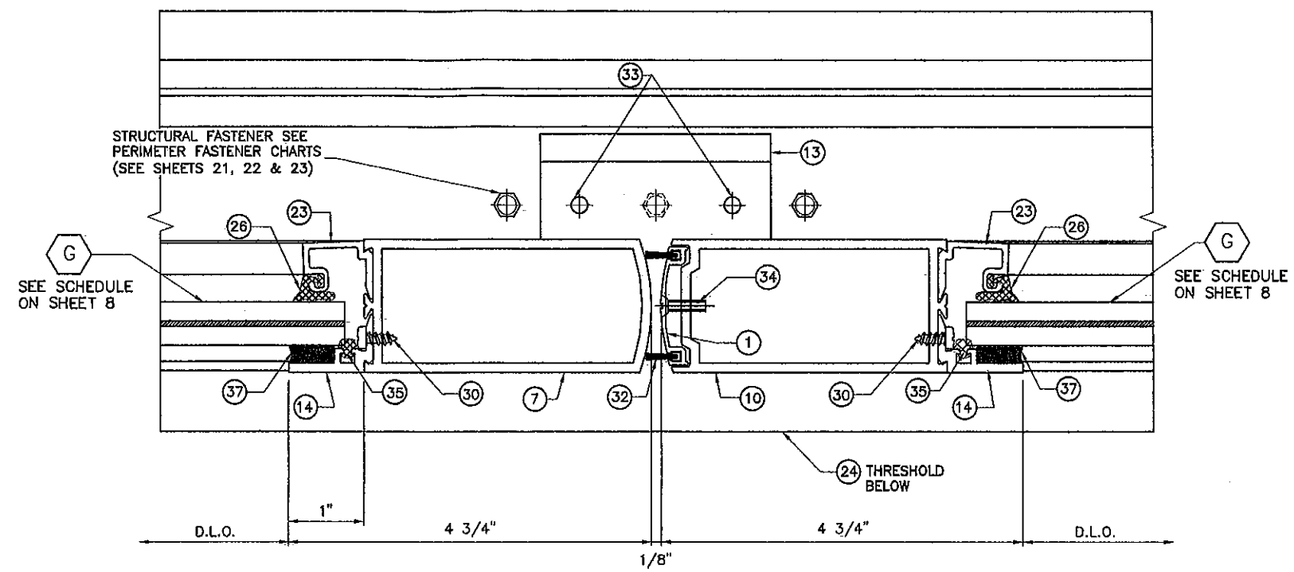

5
MEETING STILES & THRESHOLD CONNECTION

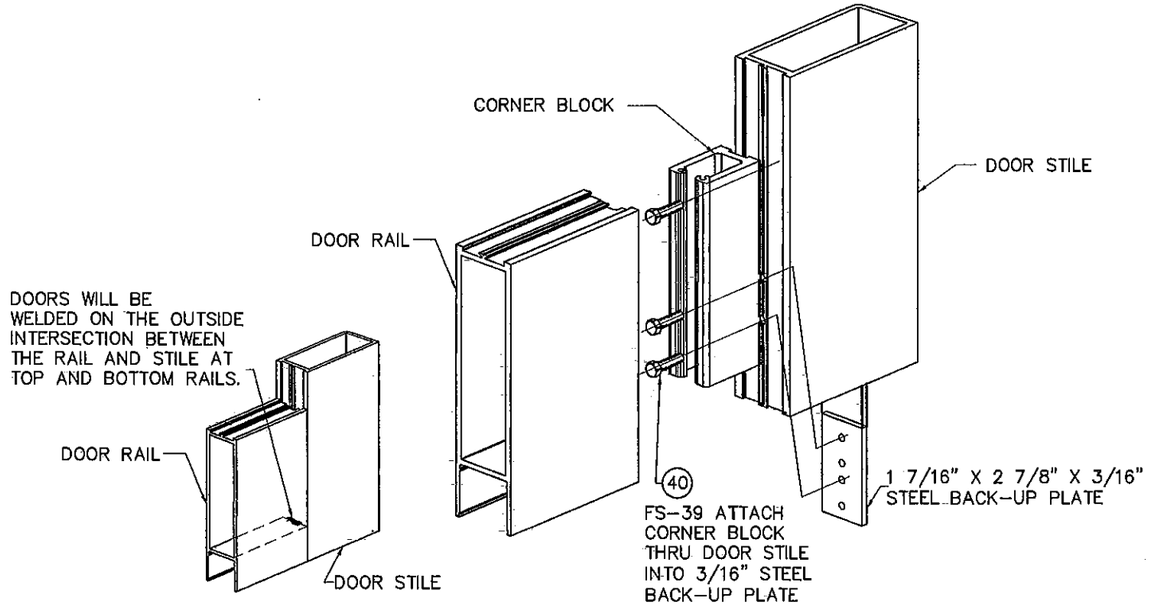

TYPICAL DOOR CORNER ASSEMBLY DETAIL (ISOMETRIC)

FLORIDA BUILDING CODE (High Velocity Hurricane Zone)

SERIES MSD-375 ALUMINUM MEDIUM STILE ENTRANCE DOOR (WET GLAZED) LARGE & SMALL MISSILE IMPACT

Oldcastle BuildingEnvelope™
803 Airport Rd - Terrell, TX 75160
www.OldcastleBE.com - Phone 800-869-4567

REV. No	DESCRIPTION	DATE	REV. No	DESCRIPTION	DATE
1	OLD DWG 09-205	12/06/10	3		
2			4		

L.G./M.C.V. DRAWN BY:
12/06/10 DATE
10-078 DRAWING No
SHEET 11 OF 24

©2010 TILTECO, INC

TILTECO INC.
TILLIT TESTING & ENGINEERING COMPANY
6355 N.W. 36th. St. Ste. 305, VIRGINIA GARDENS, FL 33166
Phone : (305)871-1530 . Fax : (305)871-1531
e-mail: tilteco@aol.com
EB-0006719
WALTER A. TILLIT Jr. P.E.
FLORIDA Lic. # 44167

WALTER A. TILLIT JR. LICENSE No. 44167 STATE OF FLORIDA PROFESSIONAL ENGINEER

P.E. SIGNATURE AND DATE

PRODUCT REVISED as complying with the Florida Building Code
Acceptance No 12-1214.16
Expiration Date 02.17.2015
By Miami Dade Product Control

MIAMI-DADE COUNTY

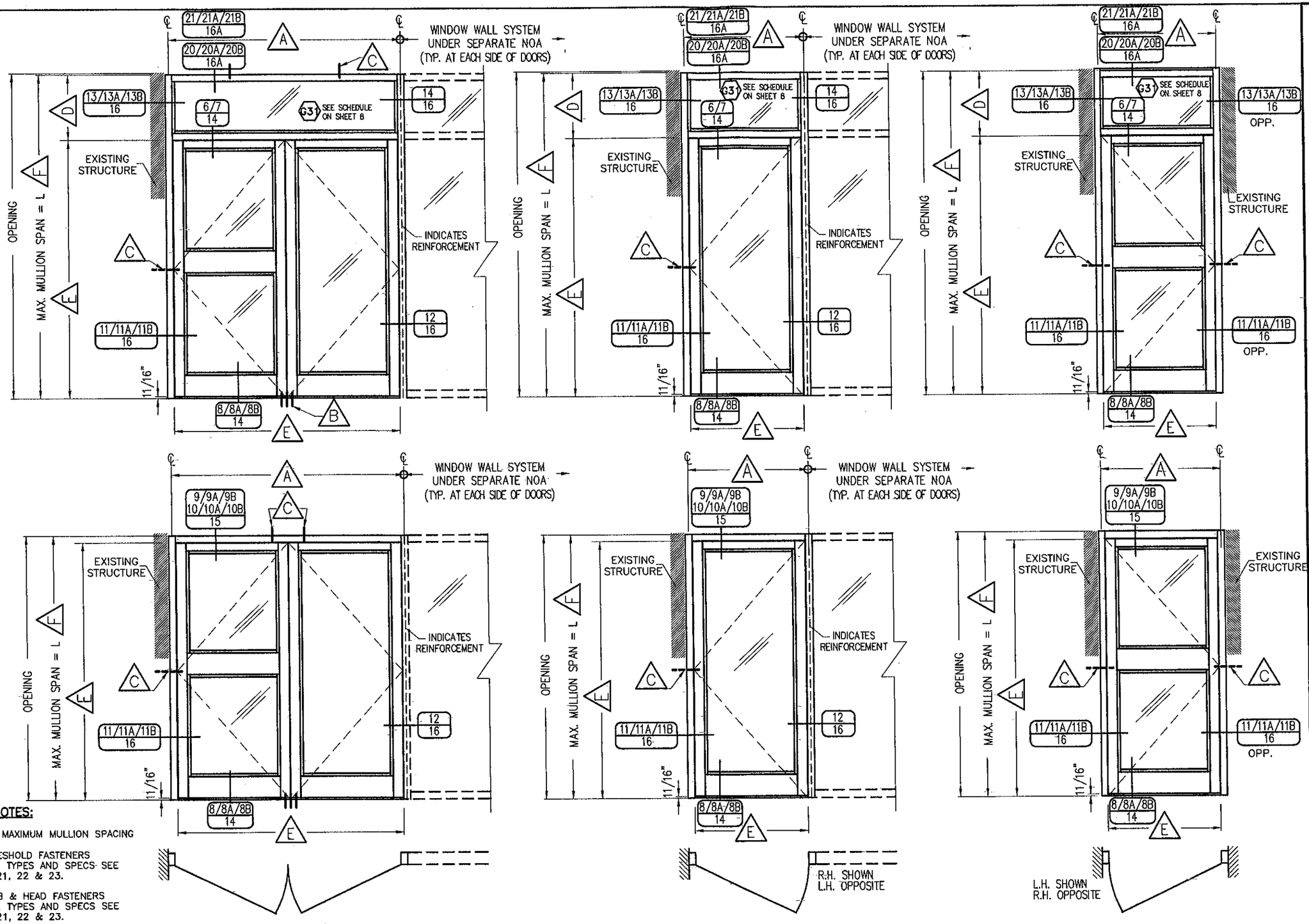

FOOT NOTES:

- (A) 86 1/2" MAXIMUM MULLION SPACING
- (B) FOR THRESHOLD FASTENERS QUANTITY, TYPES AND SPECS SEE SHEETS 21, 22 & 23.
- (C) FOR JAMB & HEAD FASTENERS QUANTITY, TYPES AND SPECS SEE SHEETS 21, 22 & 23.
- (D) 24 1/4" MAXIMUM TRANSOM HEIGHT.
- (E) 84" WIDE x 96" HIGH MAXIMUM DOOR OPENING (D.O.).
- (F) 120 1/4" MAXIMUM MULLION SPAN.

TYPICAL ELEVATIONS FOR MSD-375 IMPACT DOOR (WET GLAZED) CONNECTED TO EXISTING STRUCTURE OR FG-5000 ALUMINUM WINDOW WALL SYSTEM FRAMING

FLORIDA BUILDING CODE (High Velocity Hurricane Zone)

SERIES MSD-375 ALUMINUM MEDIUM STILE ENTRANCE DOOR (WET GLAZED) LARGE & SMALL MISSILE IMPACT

Oldcastle BuildingEnvelope™
803 Airport Rd - Terrell, TX 75160
www.OldcastleBE.com - Phone 800-869-4567

REV. No	DESCRIPTION	DATE	REV. No	DESCRIPTION	DATE
1	OLD DWG 09-205	12/06/10	3		
2			4		

DRAWN BY:	DATE	DRAWING No	SHEET
L.G./M.C.V.	12/06/10	10-078	12 OF 24

©2010 TILTECO, INC

TILLIT TESTING & ENGINEERING COMPANY INC.
6355 N.W. 36th. St., Ste. 305, VIRGINIA GARDENS, FL. 33166
Phone : (305)871-1530 . Fax : (305)871-1531
e-mail: tilteco@aol.com
EB-0006719
WALTER A. TILLIT Jr. P.E.
FLORIDA Lic. # 44167

WALTER A. TILLIT JR. LICENSE No. 44167 STATE OF FLORIDA PROFESSIONAL ENGINEER

SIGNATURE/DATE
P.E.

PRODUCT REVISED
as complying with the Florida Building Code
Acceptance No 10-1214.16
Expiration Date 02/17/2015
By Miami Dade Product Control

MIAMI-DADE COUNTY

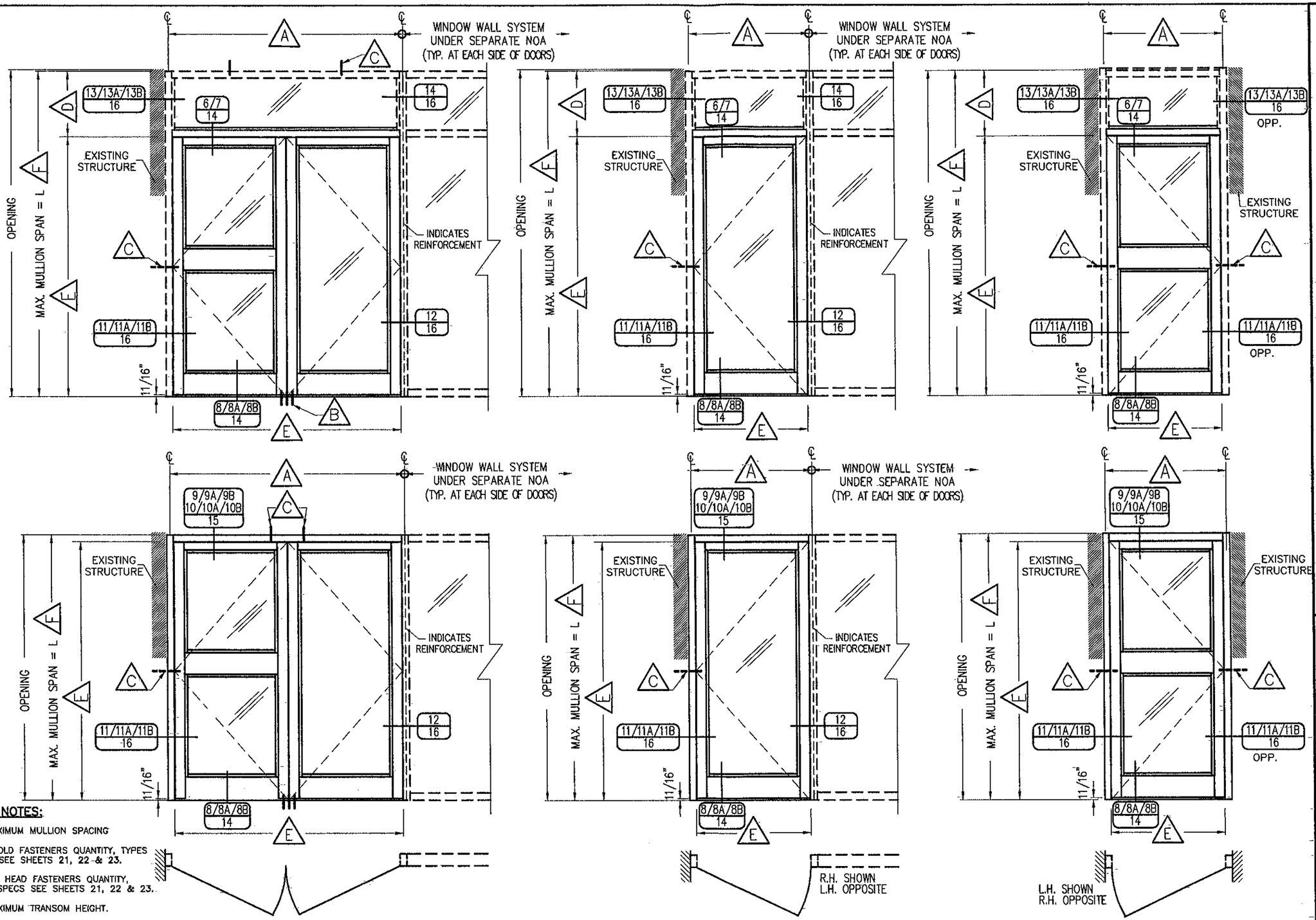

FOOT NOTES:

- (A) 74 1/2" MAXIMUM MULLION SPACING
- (B) FOR THRESHOLD FASTENERS QUANTITY, TYPES AND SPECS SEE SHEETS 21, 22 & 23.
- (C) FOR JAMB & HEAD FASTENERS QUANTITY, TYPES AND SPECS SEE SHEETS 21, 22 & 23.
- (D) 24 3/8" MAXIMUM TRANSOM HEIGHT.
- (E) 84" WIDE x 96" HIGH MAXIMUM DOOR OPENING (D.O.) WHEN DOOR ADJACENT ONLY TO EXISTING STRUCTURE.
  72" WIDE x 96" HIGH MAXIMUM DOOR OPENING (D.O.) WHEN DOOR ADJACENT TO FG-5100.
- (F) 120 3/8" MAXIMUM MULLION SPAN.

TYPICAL ELEVATIONS FOR MSD-375 IMPACT DOOR (WET GLAZED) CONNECTED TO EXISTING STRUCTURE OR FG-5100 ALUMINUM WINDOW WALL SYSTEM FRAMING

FLORIDA BUILDING CODE (High Velocity Hurricane Zone)

L.G./M.C.V. DRAWN BY:
12/06/10 DATE
10-078 DRAWING No.
SHEET 13 OF 24

SERIES MSD-375 ALUMINUM MEDIUM STILE ENTRANCE DOOR (WET GLAZED) LARGE & SMALL MISSILE IMPACT

Oldcastle BuildingEnvelope™
803 Airport Rd - Terrell, TX 75160
www.OldcastleBE.com - Phone 800-869-4567

REV. No.	DESCRIPTION	DATE	REV. No.	DESCRIPTION	DATE
1	OLD DWG 09-205	12/06/10	3		
2			4		

©2010 TILTECO, INC

TILTECO INC.
TILLIT TESTING & ENGINEERING COMPANY
6355 N.W. 36th. St., Ste. 305, VIRGINIA GARDENS, FL 33166
Phone : (305)871-1536 , Fax : (305)871-1531
e-mail: tilteco@aol.com
EB-0006719
WALTER A. TILLIT Jr. P.E.
FLORIDA Lic. # 44167

WALTER A. TILLIT JR. LICENSE No. 44167 STATE OF FLORIDA PROFESSIONAL ENGINEER

P.E. SEAL/SIGNATURE/DATE

PRODUCT REVISED
is complying with the Florida
Building Code
Acceptance No 10-1214.16
Expiration Date 02/17/2015
By
Miami Dade Product Control

MIAMI-DADE COUNTY

TRANSOM BAR CONNECTION DETAILS TO FG-5000 AND FG-5100

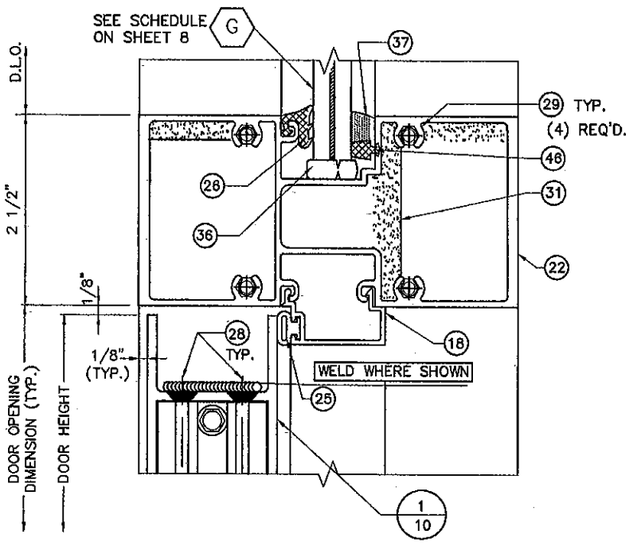

6
TRANSOM BAR
(OPTION #1 W/ 22)

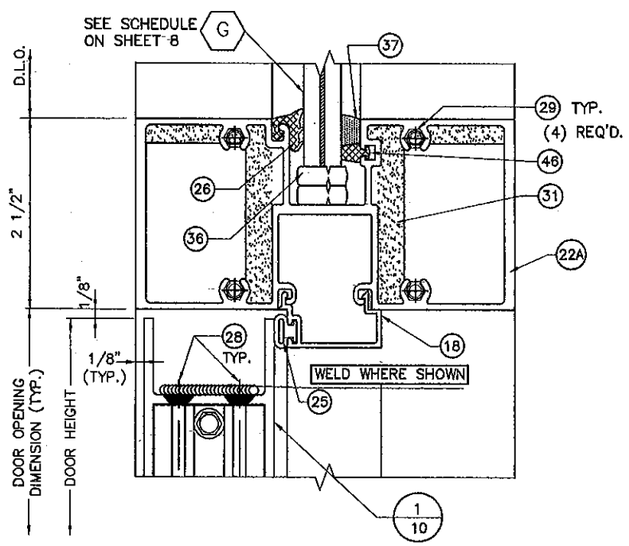

6
TRANSOM BAR
(OPTION #2 W/ 22A)

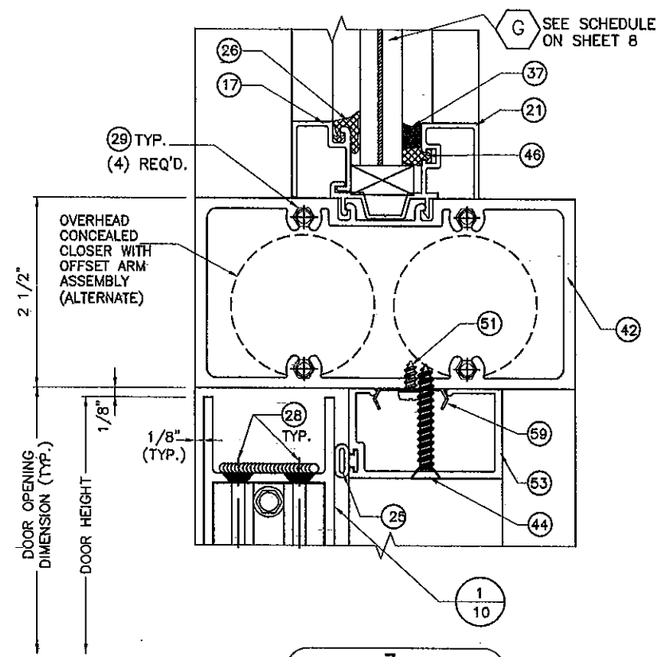

7
TRANSOM BAR CONC.

THRESHOLD CONNECTION DETAILS TO FG-5000, FG-5100, HR-250 & HR-251

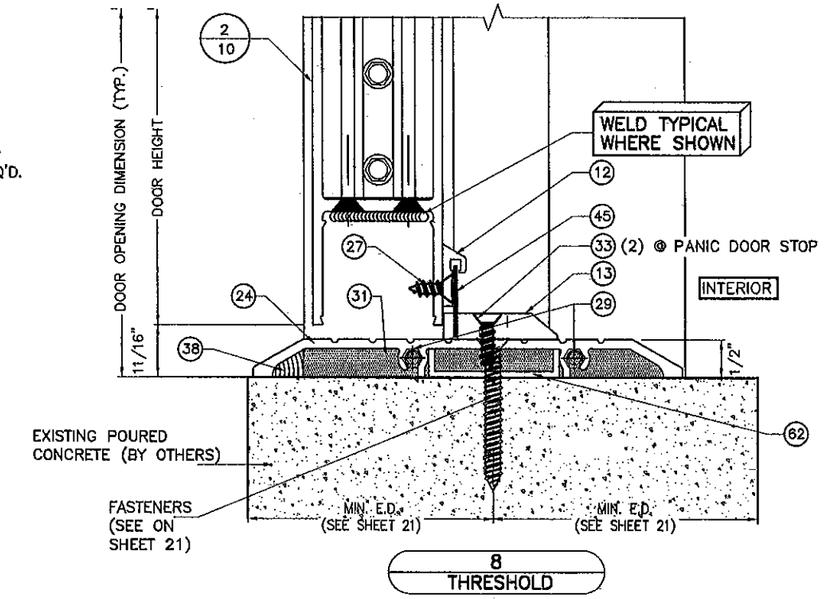

8
THRESHOLD

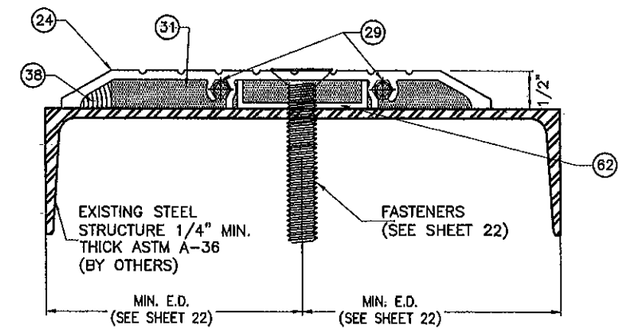

8A
THRESHOLD

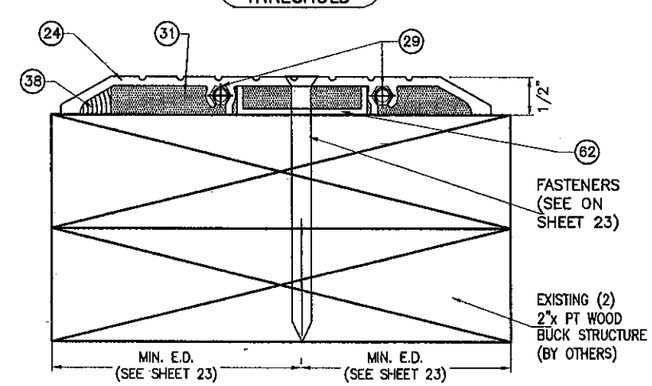

8B
THRESHOLD

FLORIDA BUILDING CODE (High Velocity Hurricane Zone)

©2010 TILTECO, INC

TILTECO INC.
TILLIT TESTING & ENGINEERING COMPANY
6355 N.W. 36th. St., Ste. 305, VIRGINIA GARDENS, FL 33166
Phone : (305)871-1530 . Fax : (305)871-1531
e-mail: tilteco@aol.com
EB-0006719
WALTER A. TILLIT Jr. P.E.
FLORIDA Lic. # 44167

SERIES MSD-375 ALUMINUM MEDIUM STILE ENTRANCE DOOR (WET GLAZED) LARGE & SMALL MISSILE IMPACT

Oldcastle BuildingEnvelope™
803 Airport Rd - Terrell, TX 75160
www.OldcastleBE.com - Phone 800-869-4567

REV. No	DESCRIPTION	DATE	REV. No	DESCRIPTION	DATE
1	OLD DWG 09-205	12/06/10	3		
2			4		

L.G./M.C.V. DRAWN BY:
12/06/10 DATE
10-078 DRAWING No
SHEET 14 OF 24

WALTER A. TILLIT JR. LICENSE No. 44167 STATE OF FLORIDA PROFESSIONAL ENGINEER

P.E. SEAL/SIGNATURE/DATE

PRODUCT RE... as complying with the Florida Building Code
Acceptance No 10-1214.14
Expiration Date 03/17/2012
By Miami Dade Product Control

MIAMI-DADE COUNTY

HEADER CONNECTION DETAILS TO EXISTING STRUCTURE, FG-5000 AND FG-5100

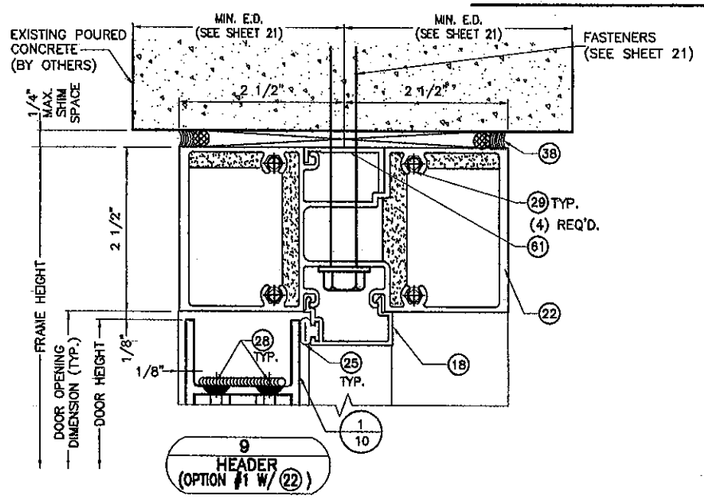

9
HEADER
(OPTION #1 W/ 22)

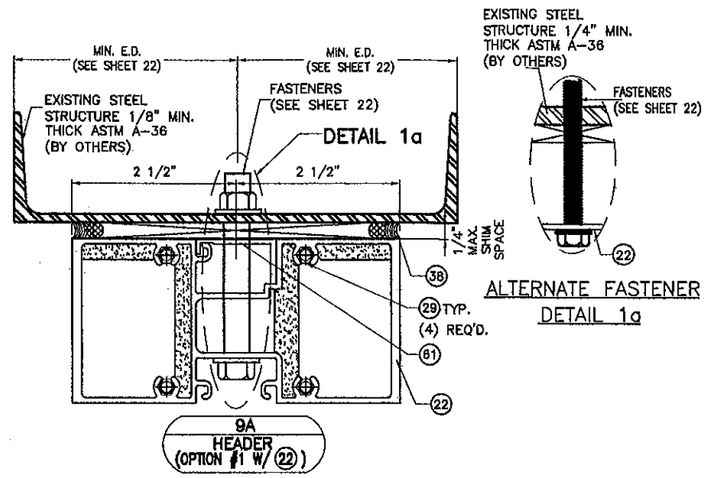

9A
HEADER
(OPTION #1 W/ 22)

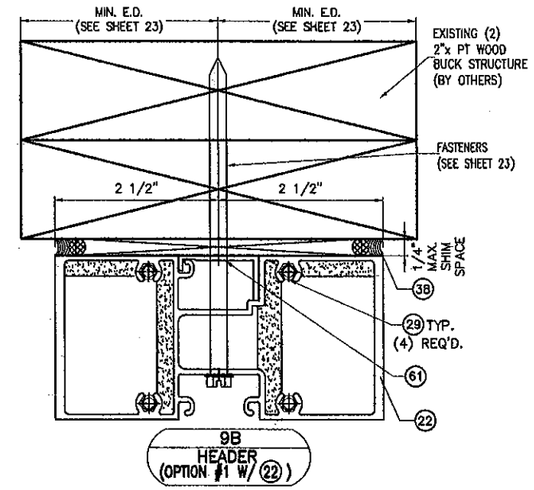

9B
HEADER
(OPTION #1 W/ 22)

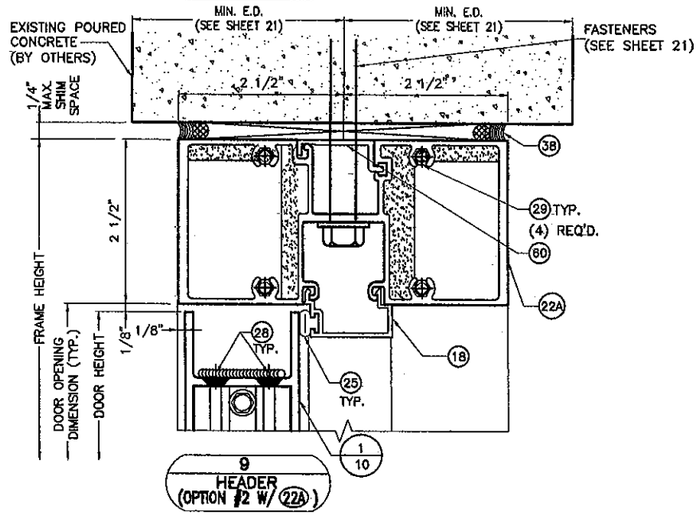

9
HEADER
(OPTION #2 W/ 22A)

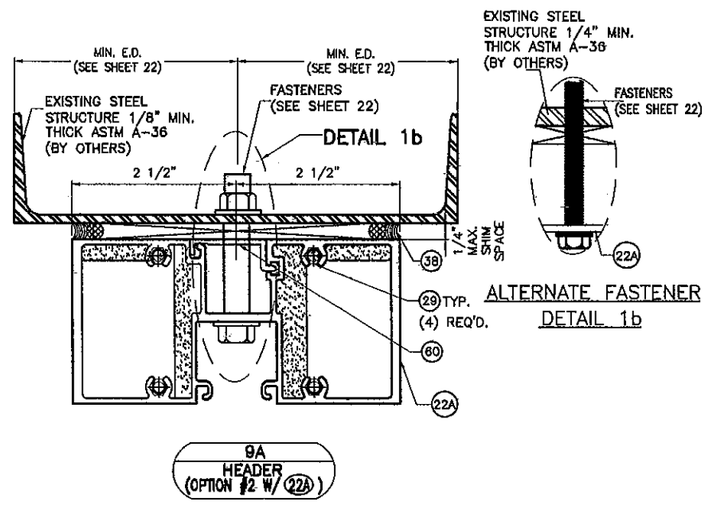

9A
HEADER
(OPTION #2 W/ 22A)

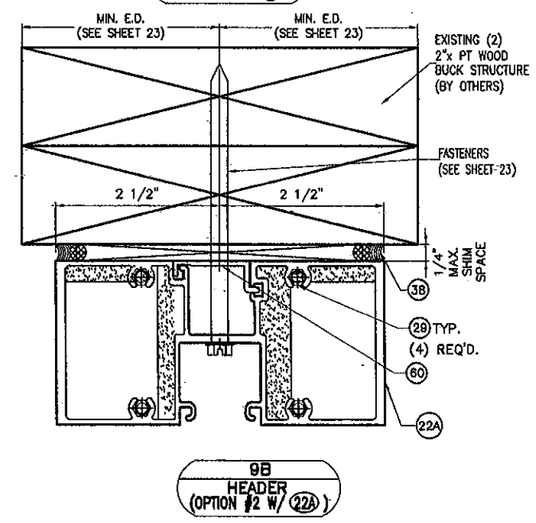

9B
HEADER
(OPTION #2 W/ 22A)

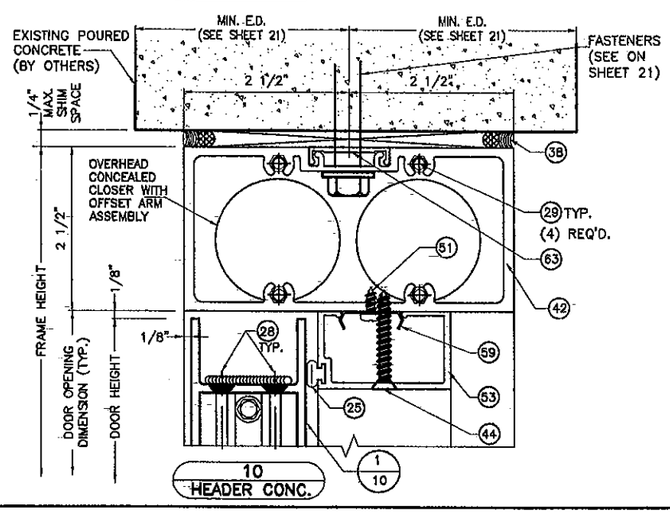

10
HEADER CONC.

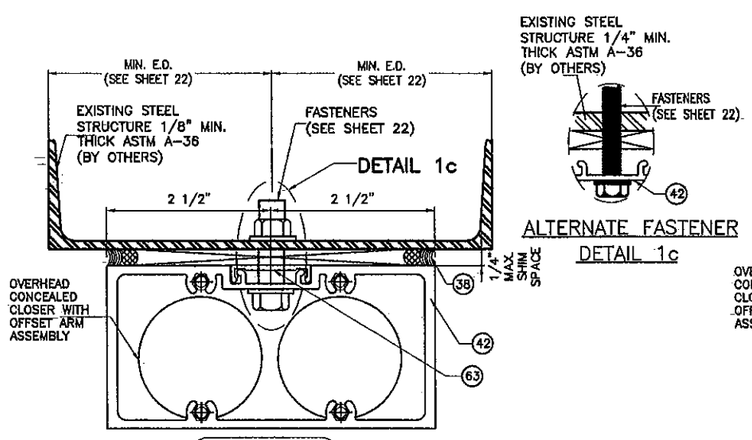

10A
HEADER CONC.

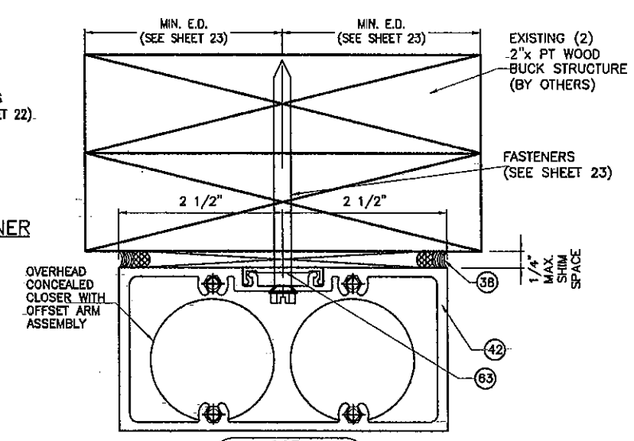

10B
HEADER CONC.

FLORIDA BUILDING CODE (High Velocity Hurricane Zone)

SERIES MSD-375 ALUMINUM MEDIUM STILE ENTRANCE DOOR (WET GLAZED) LARGE & SMALL MISSILE IMPACT

Oldcastle BuildingEnvelope™
803 Airport Rd - Terrell, TX 75160
www.OldcastleBE.com - Phone 800-869-4567

REV. No	DESCRIPTION	DATE
1	OLD DWG 09-205	12/06/10
2		
3		
4		

DATE	DESCRIPTION	REV. No

L.G./M.C.V.
DRAWN BY:

12/06/10
DATE

10-078
DRAWING No

SHEET 15 OF 24

©2010 TILTECO, INC

TILTECO INC.
TILLIT TESTING & ENGINEERING COMPANY
6355 N.W. 36th. St., Ste. 305, VIRGINIA GARDENS, FL 33166
Phone : (305)871-1530 , Fax : (305)871-1531
e-mail: tilteco@aol.com
EB-0006719
WALTER A. TILLIT Jr. P.E.
FLORIDA Lic. # 44167

WALTER A. TILLIT JR.
LICENSE
No. 44167
STATE OF FLORIDA
PROFESSIONAL ENGINEER

P.E. SEAL/SIGNATURE/DATE

PRODUCT REVISED
as complying with the Florida
Building Code
Acceptance No 16-1214.16
Expiration Date 02/17/2015
By
Miami Dade Product Control

MIAMI-DADE COUNTY

JAMB & JAMB MULLION CONNECTION DETAILS TO EXISTING STRUCTURE, FG-5000 AND FG-5100

◊ NOTE:
INDICATED MAXIMUM AND MINIMUM VALUES FOR SPECIFIED SEALANT VERTICAL JOINT WIDTH AT JAMBS CONNECTED TO WALL HAVE BEEN DETERMINED ONLY TAKING INTO CONSIDERATION THE ACTUAL MOVEMENT OF GLASS WALL AT JAMBS DUE TO THERMAL, WIND AND ITS OWN CONSTRUCTION TOLERANCE, AND NOT PERFORMANCE FACTORS FROM THE SURROUNDING STRUCTURE.

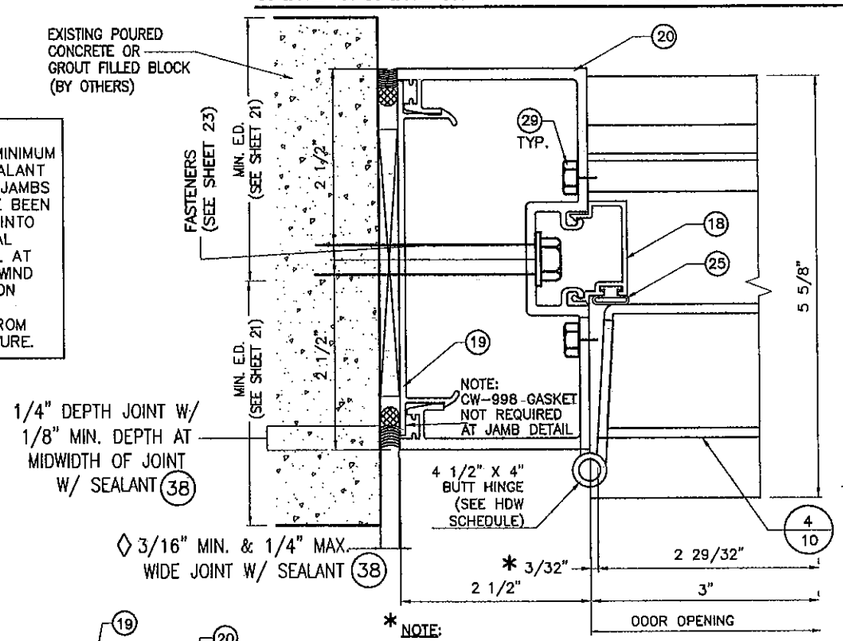

* NOTE:
3/32" CLEARANCE DIMENSIONS SHOWN ARE TYPICAL FOR BUTT HINGES OR OFFSET PIVOTS. GEAR HINGES REQUIRE 5/16" CLEARANCE AT JAMBS.

11
JAMB TO WALL @ DOOR

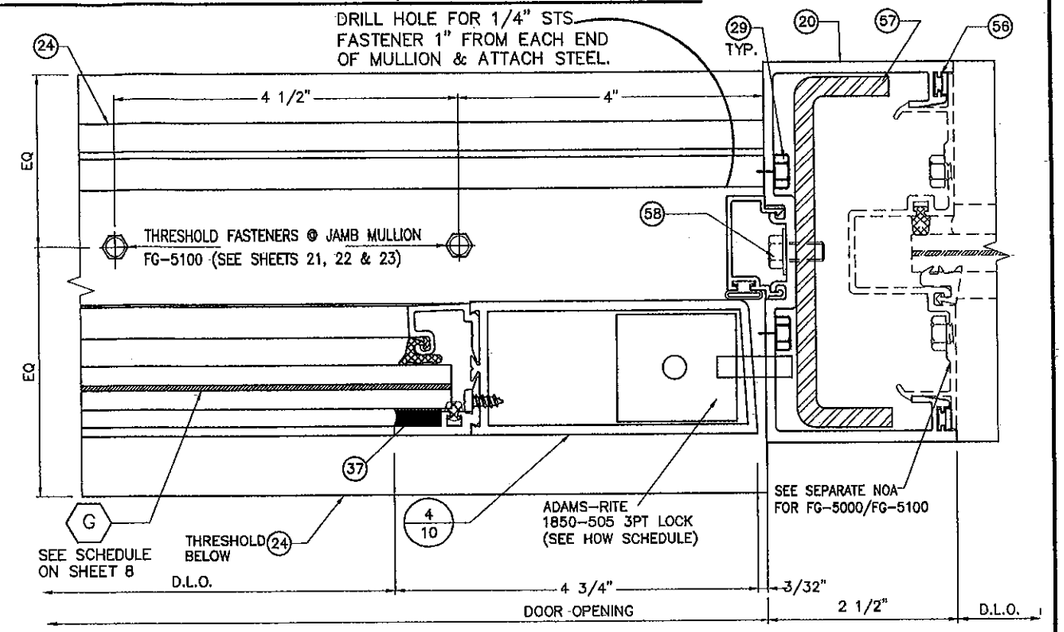

12
JAMB MULLION @ DOOR

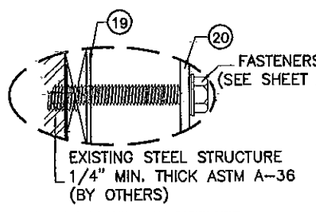

ALTERNATE FASTENER DETAIL 1

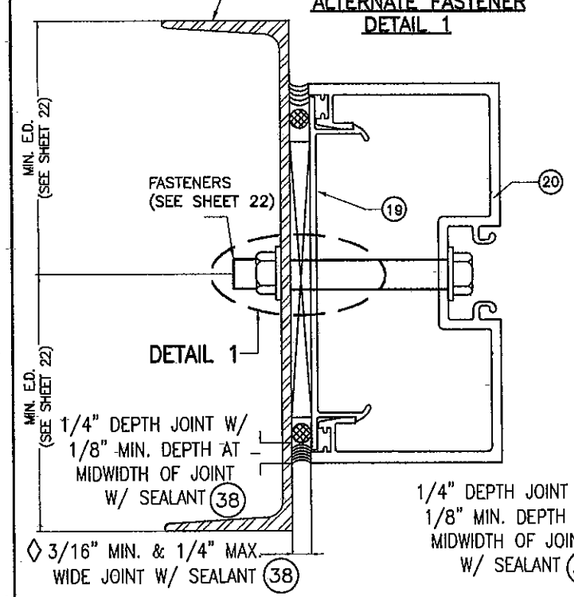

11A
JAMB TO WALL
OR
13A
JAMB TO WALL @ TRANSOM

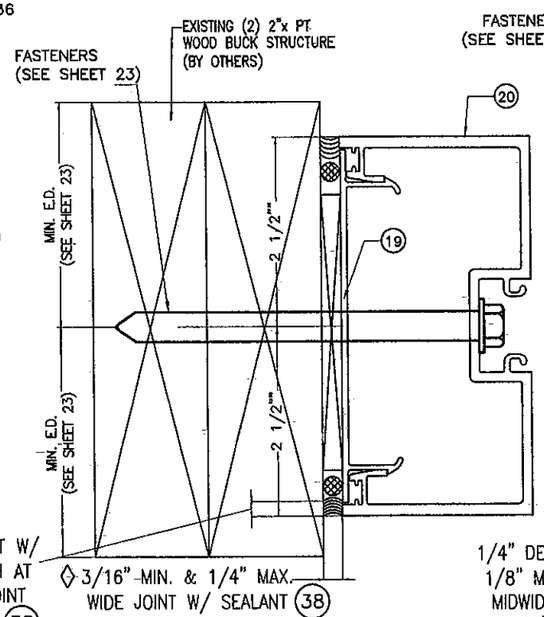

11B
JAMB TO WALL
OR
13B
JAMB TO WALL @ TRANSOM

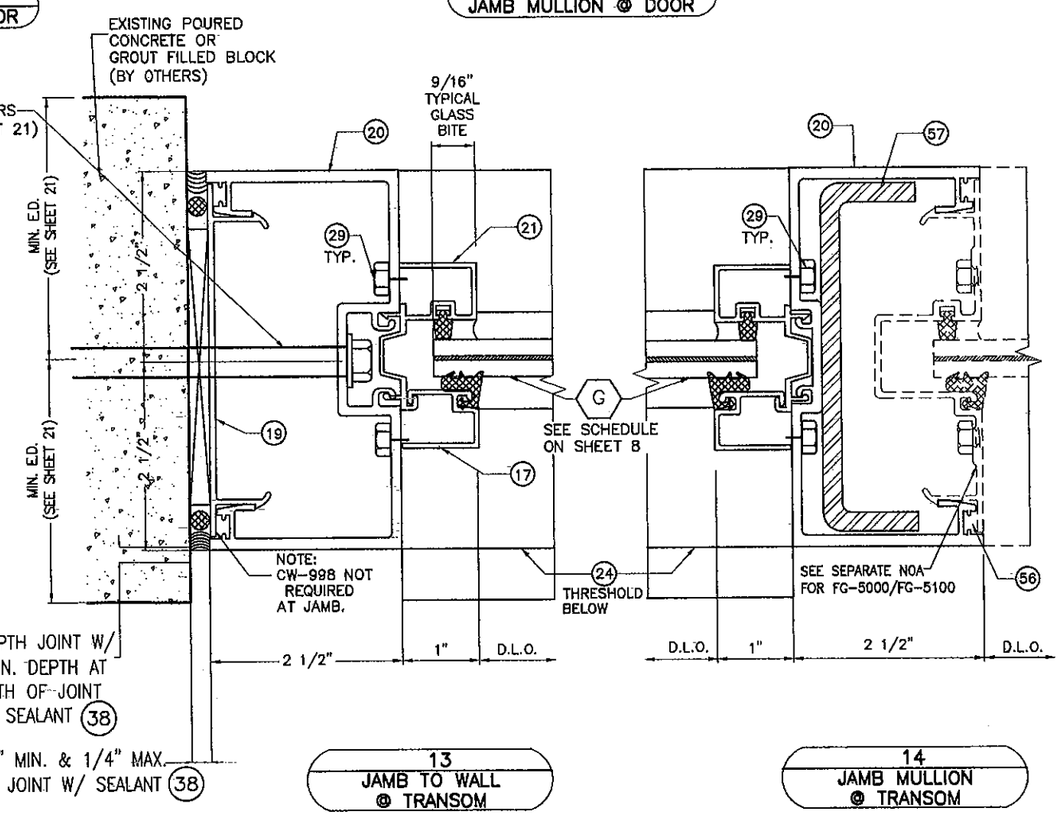

13
JAMB TO WALL @ TRANSOM

14
JAMB MULLION @ TRANSOM

FLORIDA BUILDING CODE (High Velocity Hurricane Zone)

©2010 TILTECO, INC

TILTECO INC.
TILLIT TESTING & ENGINEERING COMPANY
6355 N.W. 36th. St., Ste. 305, VIRGINIA GARDENS, FL 33166
Phone : (305)871-1530 , Fax : (305)871-1531
e-mail: tilteco@aol.com
EB-0006719
WALTER A. TILLIT Jr. P.E.
FLORIDA Lic. # 44167

L.G./M.C.V. DRAWN BY:
12/06/10 DATE
10-078 DRAWING No
SHEET 16 OF 24

SERIES MSD-375 ALUMINUM MEDIUM STILE ENTRANCE DOOR (WET GLAZED) LARGE & SMALL MISSILE IMPACT

Oldcastle BuildingEnvelope™
803 Airport Rd - Terrell, TX 75160
www.OldcastleBE.com - Phone 800-869-4567

REV. No	DESCRIPTION	DATE	REV. No	DESCRIPTION	DATE
1	OLD DWG. 09-205	12/06/10	3		
2			4		

WALTER A. TILLIT JR. LICENSE No. 44167 STATE OF FLORIDA PROFESSIONAL ENGINEER

SIGNATURE/DATE
P.E.

PRODUCT REVISED as complying with the Florida Building Code
Acceptance No 10-1214.16
Expiration Date 02/17/2015
By Miami Dade Product Control

MIAMI-DADE COUNTY

HEADER CONNECTION DETAILS TO EXISTING STRUCTURE

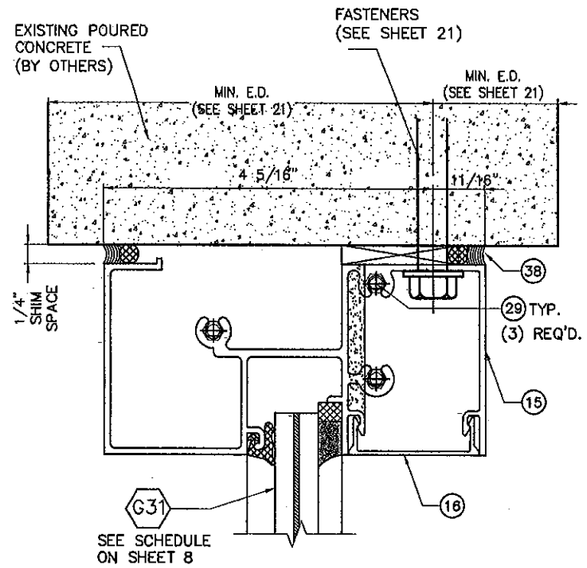

20
HEADER
@ TRANSOM

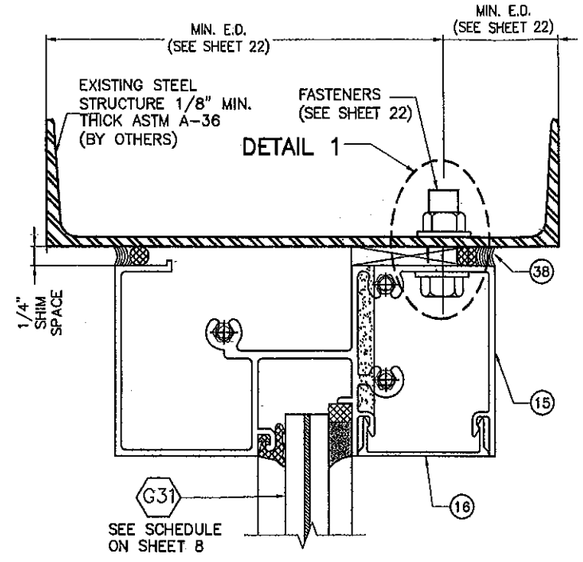

20A
HEADER
@ TRANSOM

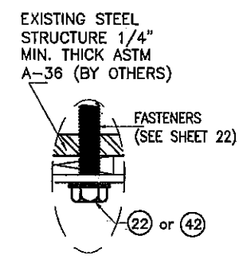

ALTERNATE FASTENER
DETAIL 1

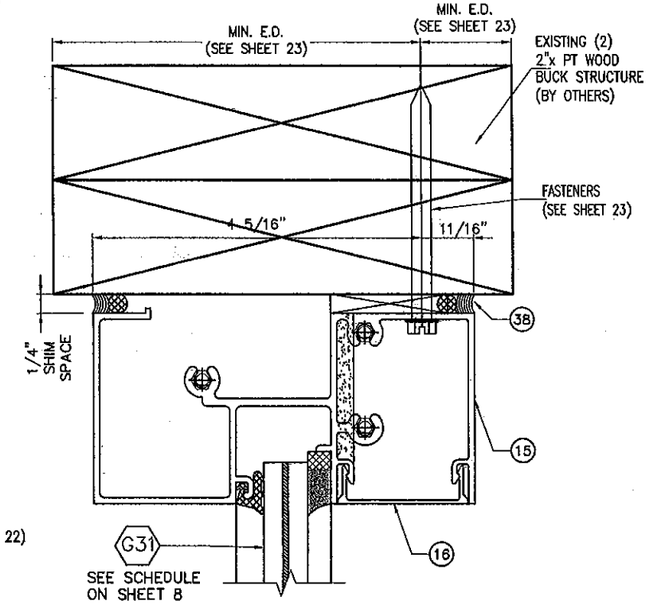

20B
HEADER
@ TRANSOM

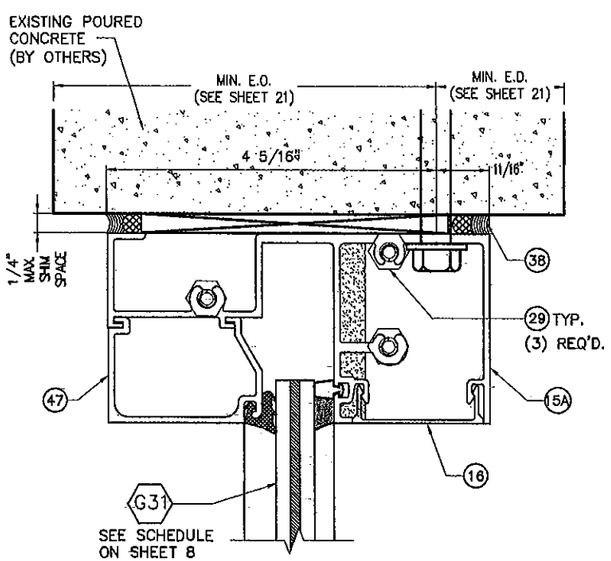

21
HEADER
@ TRANSOM
(OPTION TO 15)

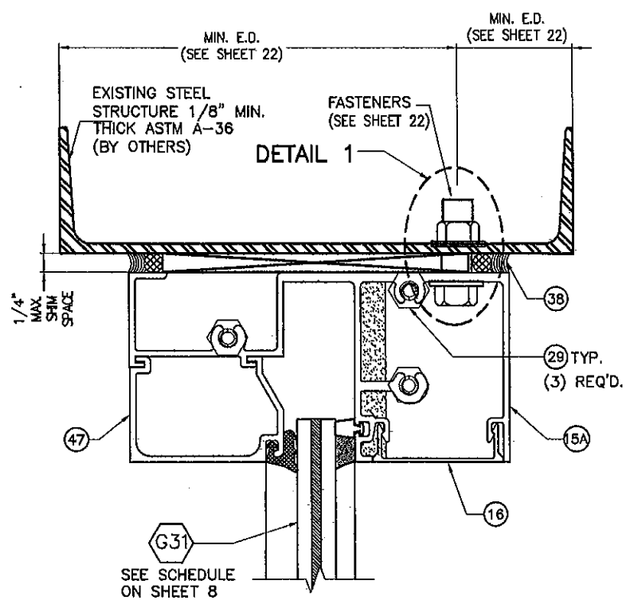

21A
HEADER
@ TRANSOM
(OPTION TO 15)

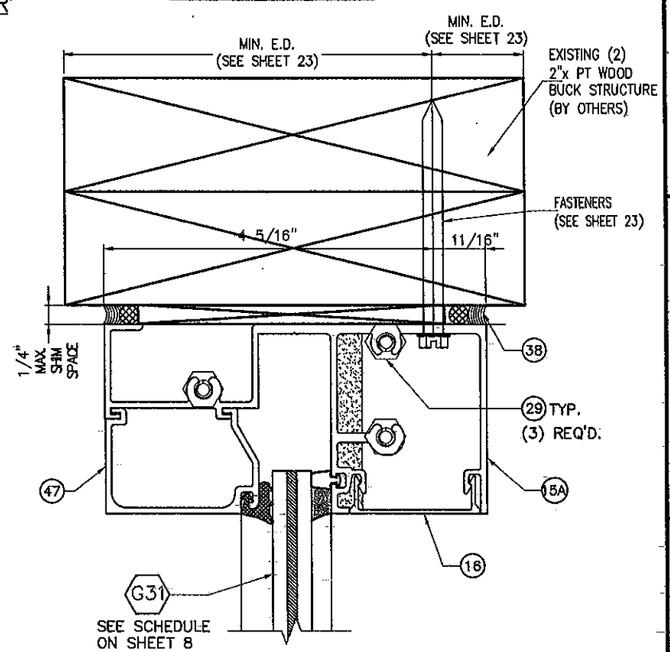

21B
HEADER
@ TRANSOM
(OPTION TO 15)

FLORIDA BUILDING CODE (High Velocity Hurricane Zone)

SERIES MSD-375 ALUMINUM MEDIUM STILE ENTRANCE DOOR (WET GLAZED) LARGE & SMALL MISSILE IMPACT

Oldcastle BuildingEnvelope™
803 Airport Rd - Terrell, TX 75160
www.OldcastleBE.com - Phone 800-869-4567

REV. No	DESCRIPTION	DATE
1	OLD DWG 09-205	12/06/10
2		
3		
4		

REV. No	DESCRIPTION	DATE

L.G./M.C.V.
DRAWN BY:

12/06/10
DATE

10-078
DRAWING No

SHEET 16A OF 24

©2010 TILTECO, INC

TILTECO INC.
TILLIT TESTING & ENGINEERING COMPANY
6355 N.W. 36th. St., Ste. 305, VIRGINIA GARDENS, FL 33166
Phone : (305)871-1530 , Fax : (305)871-1531
e-mail: tilteco@aol.com
EB-0006719
WALTER A. TILLIT Jr. P.E.
FLORIDA Lic. # 44167

WALTER A. TILLIT JR. LICENSE No. 44167 STATE OF FLORIDA PROFESSIONAL ENGINEER

SIGNATURE/DATE
P.E. SEAL

PRODUCT REVISED
as complying with the Florida
Building Code
Acceptance No ID-1214.16
Expiration Date 03/17/2015
By
Miami Dade Product Control

MIAMI-DADE COUNTY

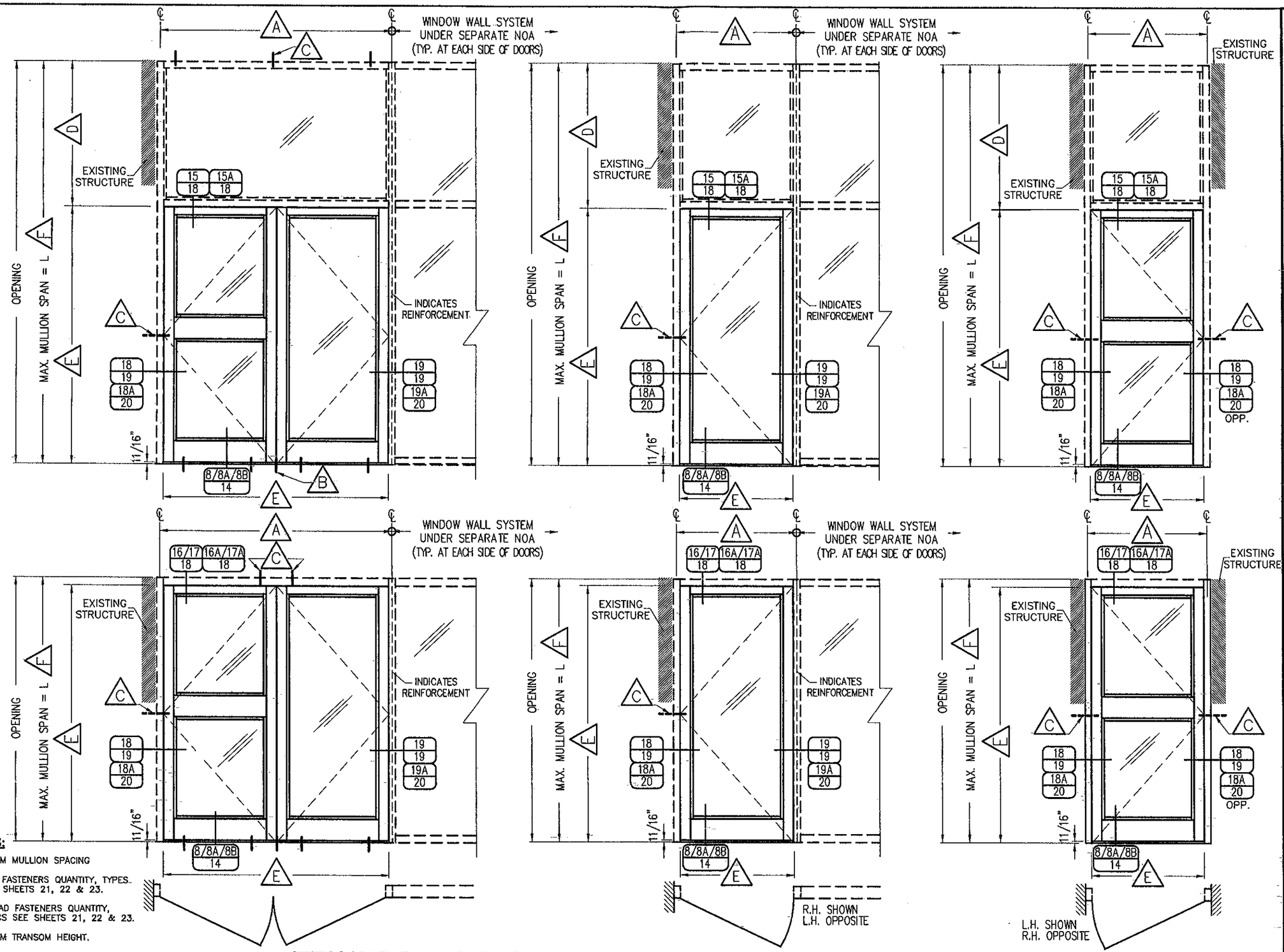

FOOT NOTES:

- (A) 76 1/2" MAXIMUM MULLION SPACING
- (B) FOR THRESHOLD FASTENERS QUANTITY, TYPES AND SPECS SEE SHEETS 21, 22 & 23.
- (C) FOR JAMB & HEAD FASTENERS QUANTITY, TYPES AND SPECS SEE SHEETS 21, 22 & 23.
- (D) 24 1/4" MAXIMUM TRANSOM HEIGHT.
- (E) 74" WIDE x 96" HIGH MAXIMUM DOOR OPENING (D.O.).
- (F) 150 1/2" MAXIMUM MULLION SPAN.

TYPICAL ELEVATIONS FOR MSD-375 IMPACT DOOR (WET GLAZED) CONNECTED TO EXISTING STRUCTURE OR HR-250 AND HR-251 CAPTURED CURTAIN WALL SYSTEM FRAMING

FLORIDA BUILDING CODE (High Velocity Hurricane Zone)

©2010 TILTECO, INC

TILTECO INC.
TILLIT TESTING & ENGINEERING COMPANY
6355 N.W. 36th. St. Ste. 305, VIRGINIA GARDENS, FL. 33166
Phone : (305)871-1530 , Fax : (305)871-1531
e-mail: tilteco@aol.com
EB-0006719
WALTER A. TILLIT Jr. P.E.
FLORIDA Lic. # 44167

L.G./M.C.V. DRAWN BY:

12/06/10 DATE

10-078 DRAWING No

SHEET 17 OF 24

SERIES MSD-375 ALUMINUM MEDIUM STILE ENTRANCE DOOR (WET GLAZED) LARGE & SMALL MISSILE IMPACT

Oldcastle BuildingEnvelope™
803 Airport Rd - Terrell, TX 75160
www.OldcastleBE.com - Phone 800-869-4567

REV. No.	DESCRIPTION	DATE	REV. No.	DESCRIPTION	DATE
1	OLD DWG 09-205	12/06/10	3		
2			4		

WALTER A. TILLIT JR. LICENSE No. 44167 STATE OF FLORIDA PROFESSIONAL ENGINEER

P.E. SIGNATURE/DATE

PRODUCT REVISED
as complying with the Florida Building Code
Acceptance No 10-1214.16
Expiration Date 02/17/2015
By
Miami Dade Product Control

MIAMI-DADE COUNTY

TRANSOM BAR AND HEADER CONNECTION DETAILS TO HR-250

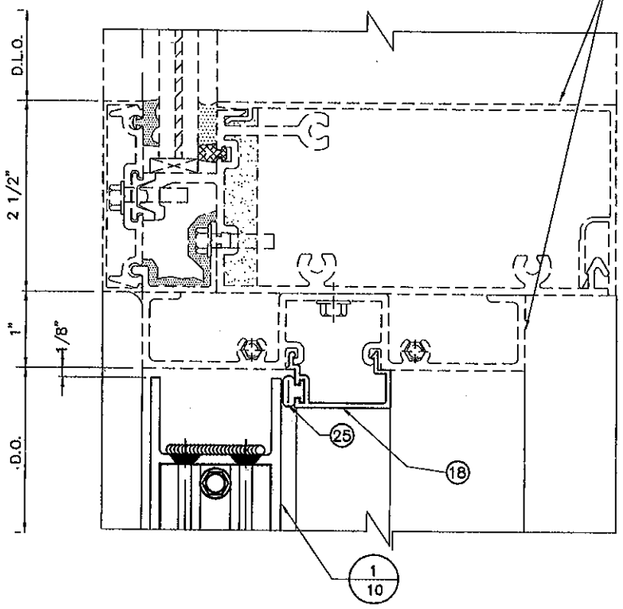

15
TRANSOM BAR

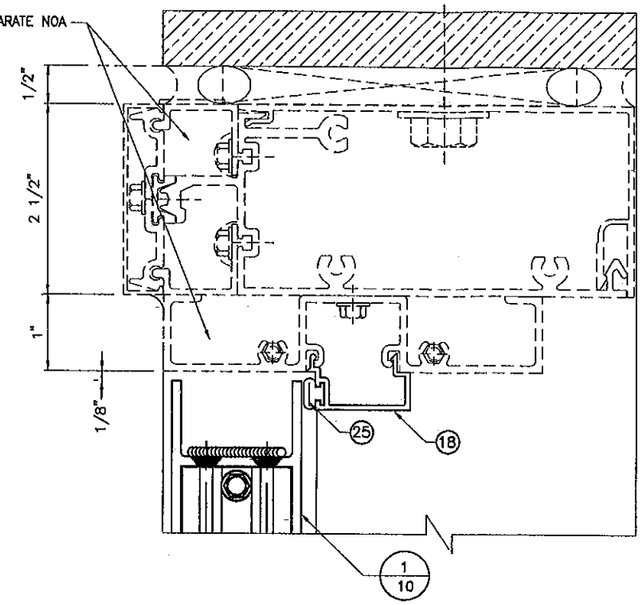

16
HEADER

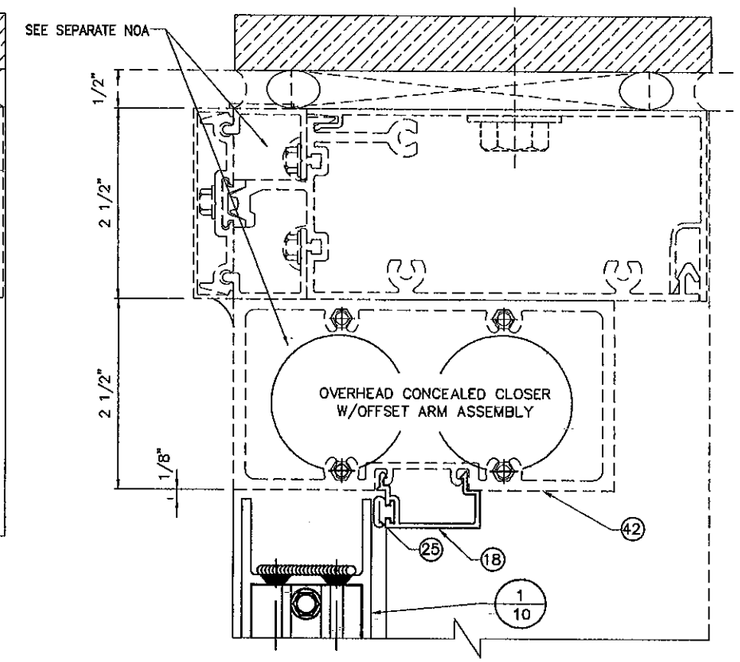

17
HEADER CONC.

TRANSOM BAR AND HEADER CONNECTION DETAILS TO HR-251

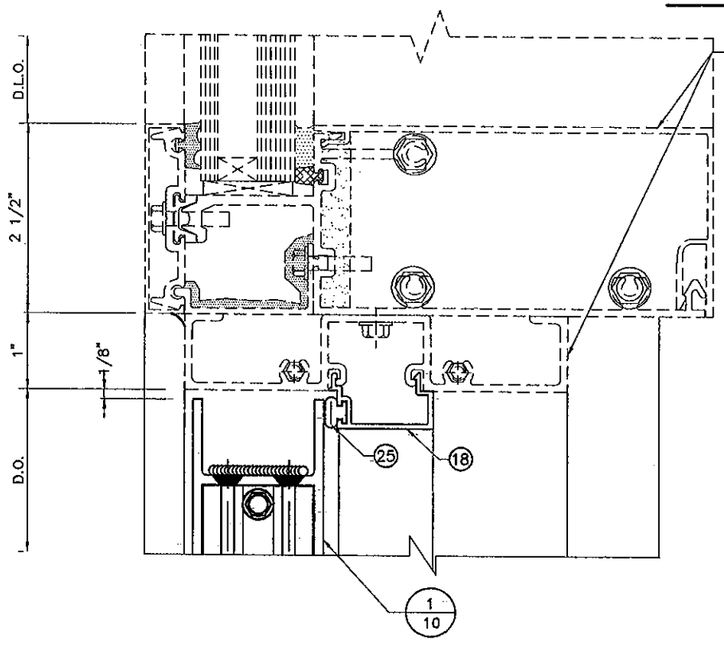

15A
TRANSOM BAR

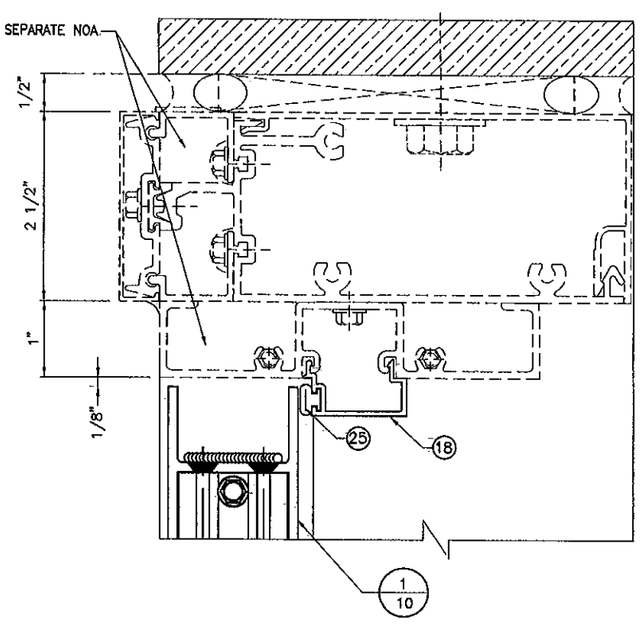

16
HEADER

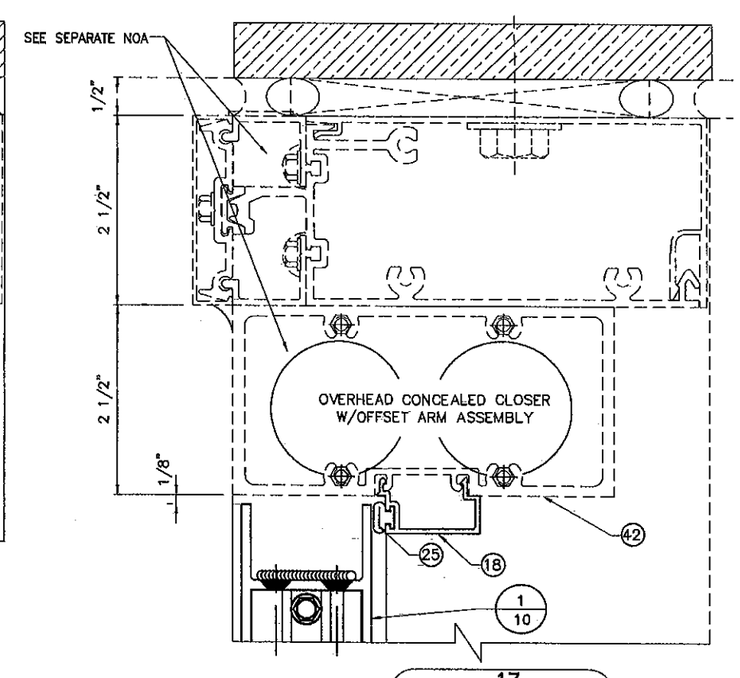

17
HEADER CONC.

FLORIDA BUILDING CODE (High Velocity Hurricane Zone)

SERIES MSD-375 ALUMINUM MEDIUM STILE ENTRANCE DOOR (WET GLAZED)
LARGE & SMALL MISSILE IMPACT

Oldcastle BuildingEnvelope™
803 Airport Rd - Terrell, TX 75160
www.OldcastleBE.com - Phone 800-869-4567

REV. No	DESCRIPTION	DATE
1	OLD DWG 09-205	12/06/10
2		
3		
4		

REV. No	DESCRIPTION	DATE

L.G./M.C.V.
DRAWN BY:

12/06/10
DATE

10-078
DRAWING No

SHEET 18 OF 24

©2010 TILTECO, INC

TILTECO INC.
TILLIT TESTING & ENGINEERING COMPANY
6355 N.W. 36th. St. Ste. 305, VIRGINIA GARDENS, FL 33166
Phone : (305)871-1530 , Fax : (305)871-1531
e-mail: tilteco@aol.com
WALTER A. TILLIT Jr. P.E.
FLORIDA Lic. # 44167
EB-0006719

WALTER A. TILLIT JR.
LICENSE
No. 44167
STATE OF FLORIDA
PROFESSIONAL ENGINEER

P.E. SIGNATURE/DATE

PRODUCT REVISED
as complying with the Florida
Building Code
Acceptance No 10-1214.16
Expiration Date 02/17/2015
By
Miami Dade Product Control

MIAMI-DADE COUNTY

JAMB CONNECTION DETAILS TO HR-250

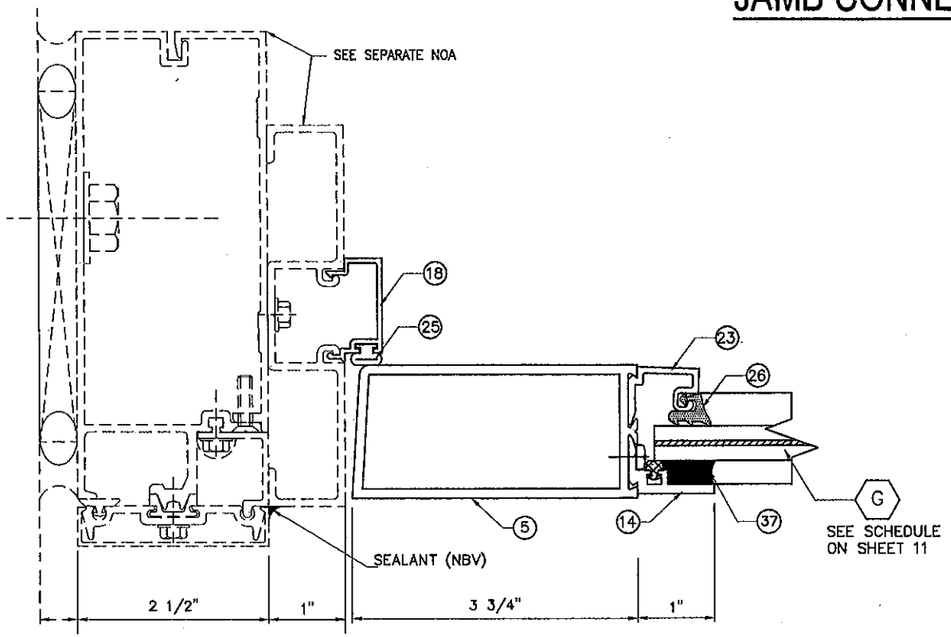

ALTERNATE 1

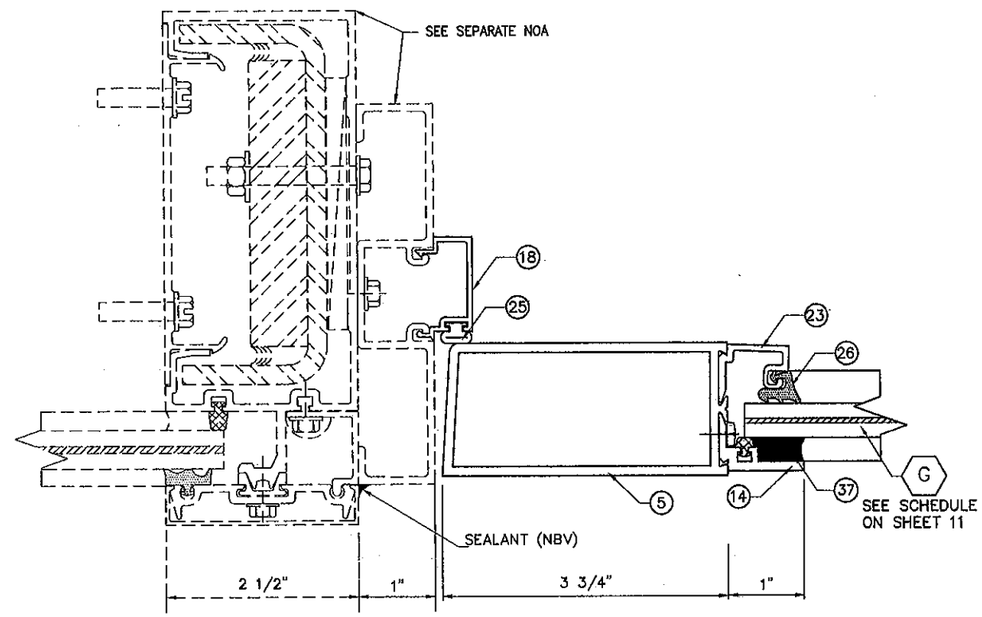

19
INT. JAMB AT DOOR

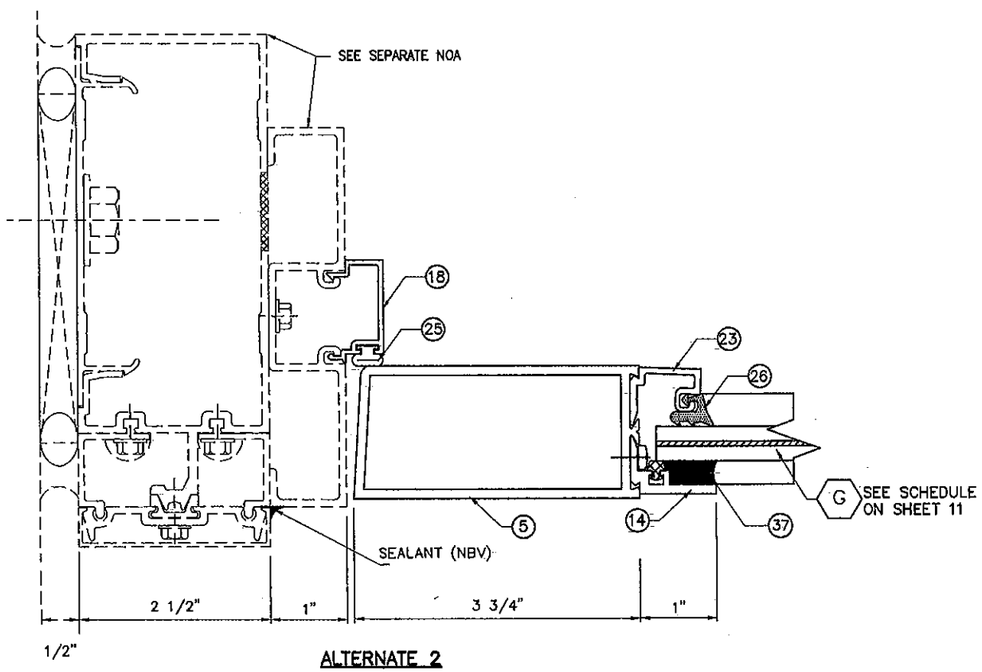

ALTERNATE 2

18
JAMB AT WALL

FLORIDA BUILDING CODE (High Velocity Hurricane Zone)

©2010 TILTECO, INC

TILTECO INC.
TILLIT TESTING & ENGINEERING COMPANY
6355 N.W. 36th, St. Ste. 305, VIRGINIA GARDENS, FL 33166
Phone : (305)871-1530 . Fax : (305)871-1531
e-mail: tilteco@aol.com
EB-0006719
WALTER A. TILLIT Jr. P.E.
FLORIDA Lic. # 44167

SERIES MSD-375 ALUMINUM MEDIUM STILE ENTRANCE DOOR (WET GLAZED)
LARGE & SMALL MISSILE IMPACT

Oldcastle BuildingEnvelope™
803 Airport Rd - Terrell, TX 75160
www.OldcastleBE.com - Phone 800-869-4567

REV. No.	DESCRIPTION	DATE	REV. No.	DESCRIPTION	DATE
1	OLD DWG 09-205	12/06/10	3		
2			4		

L.G./M.C.V. DRAWN BY:
12/06/10 DATE
10-078 DRAWING No
SHEET 19 OF 24

WALTER A. TILLIT JR. LICENSE No. 44167 STATE OF FLORIDA PROFESSIONAL ENGINEER

P.E. SIGNATURE/DATE

PRODUCT REVISED
as complying with the Florida Building Code
Acceptance No 10-1214.16
Expiration Date 12/27/2015
By Miami Dade Product Control

MIAMI-DADE COUNTY

JAMB CONNECTION DETAILS TO HR-251

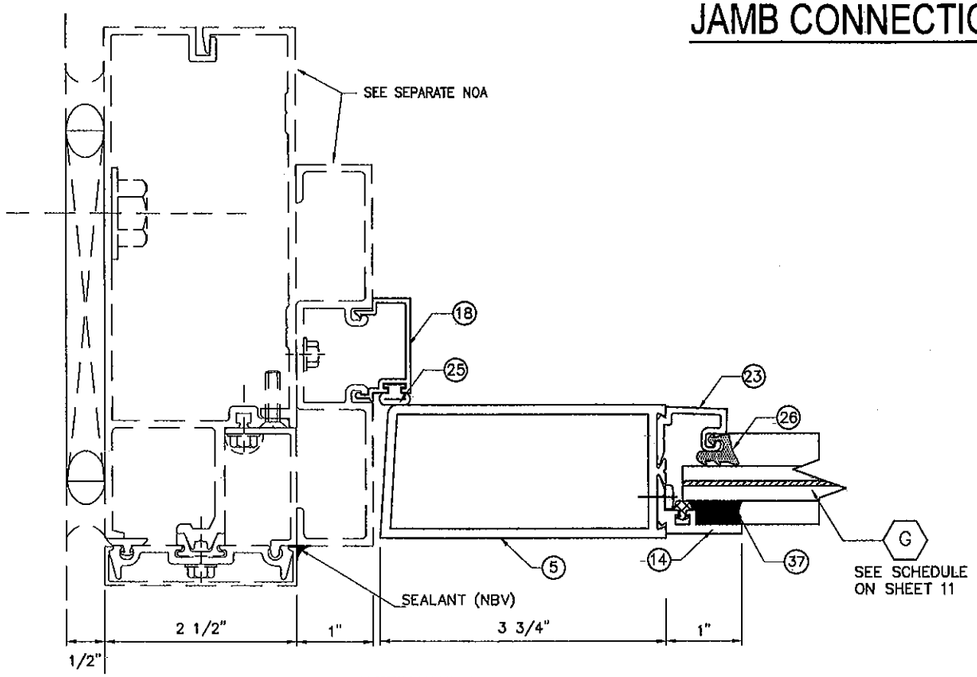

ALTERNATE 1

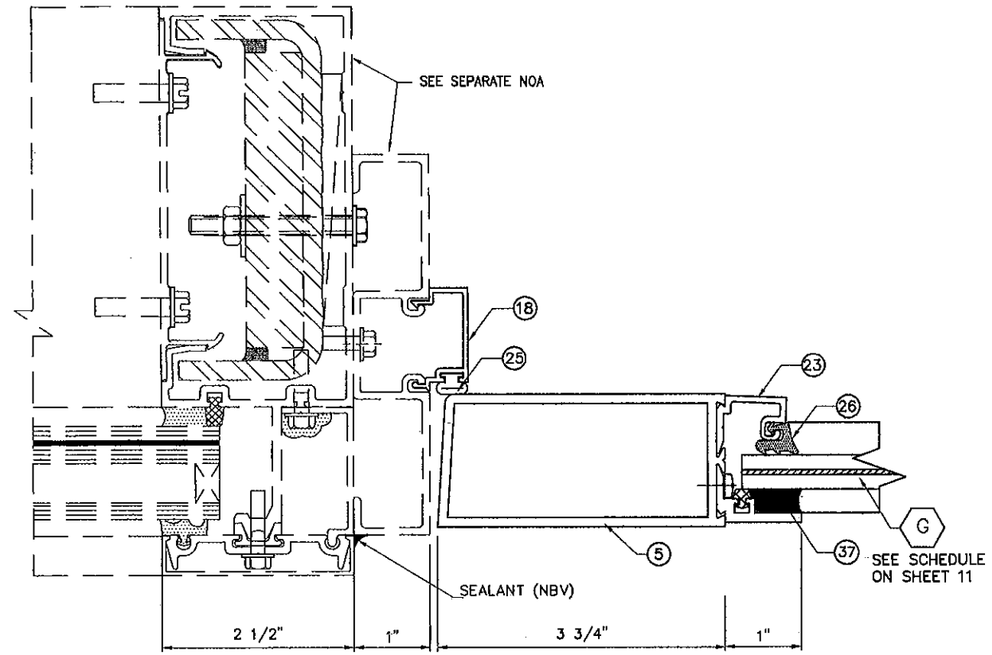

19A
INT. JAMB AT DOOR

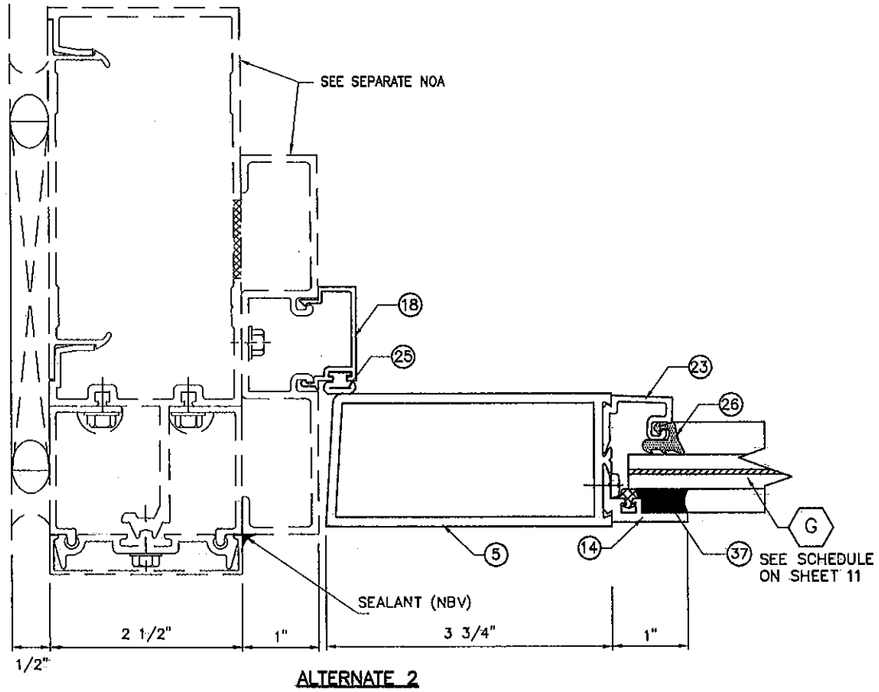

ALTERNATE 2

18A
JAMB AT WALL

FLORIDA BUILDING CODE (High Velocity Hurricane Zone)

SERIES MSD-375 ALUMINUM MEDIUM STILE ENTRANCE DOOR (WET GLAZED) LARGE & SMALL MISSILE IMPACT

Oldcastle BuildingEnvelope™
803 Airport Rd - Terrell, TX 75160
www.OldcastleBE.com - Phone 800-869-4567

REV. No.	DESCRIPTION	DATE	REV. No.	DESCRIPTION	DATE
1	OLD DWG 09-205	12/06/10	3		
2			4		

L.G./M.C.V. DRAWN BY:
12/06/10 DATE
10-078 DRAWING No
SHEET 20 OF 24

©2010 TILTECO, INC

TILTECO INC.
TILLIT TESTING & ENGINEERING COMPANY
6355 N.W. 36th. St., Ste. 305, VIRGINIA GARDENS, FL 33166
Phone : (305)871-1530 . Fax : (305)871-1531
e-mail: tilteco@aol.com
EB-0006719
WALTER A. TILLIT Jr. P.E.
FLORIDA Lic. # 44167

WALTER A. TILLIT JR. LICENSE No. 44167 STATE OF FLORIDA PROFESSIONAL ENGINEER

P.E. SIGNATURE/DATE

PRODUCT REVISED
as complying with the Florida Building Code
Accepted No 10-1214.16
Expiration Date 02/17/2015
By Miami Dade Product Control Division

MIAMI-DADE COUNTY

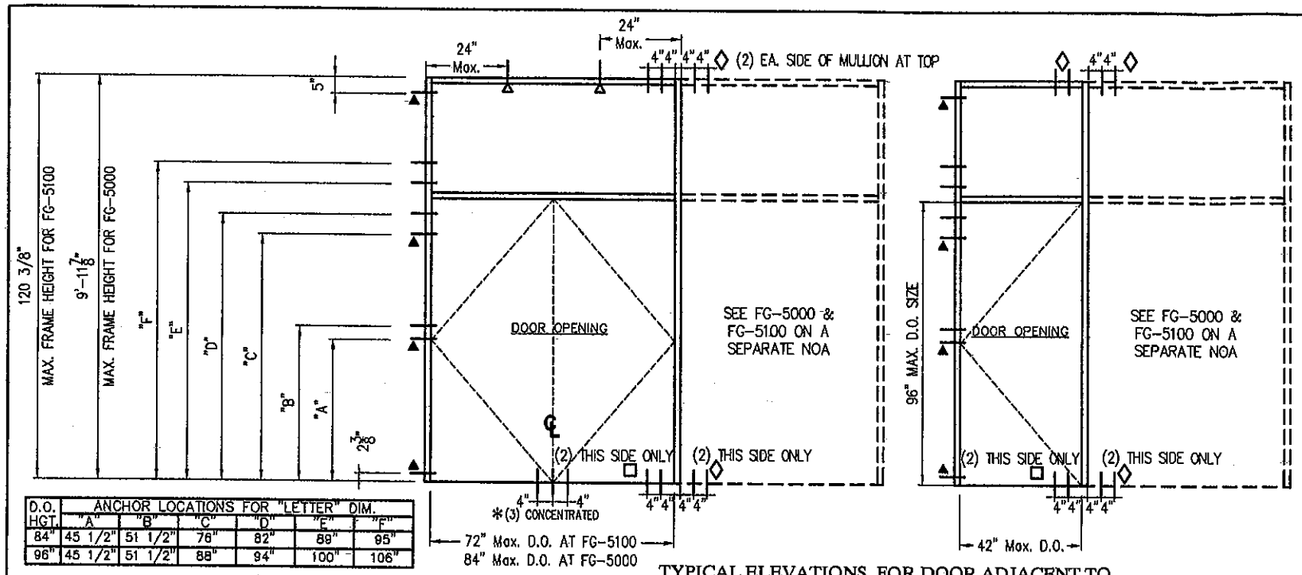

D.O. HGT.	ANCHOR LOCATIONS FOR "LETTER" DIM. "A"	"B"	"C"	"D"	"E"	"F"
84"	45 1/2"	51 1/2"	76"	82"	89"	95"
96"	45 1/2"	51 1/2"	88"	94"	100"	106"

TYPICAL ELEVATIONS FOR DOOR ADJACENT TO FG-5000 & FG-5100 ALUMINUM WINDOW WALL SYSTEM FRAMING

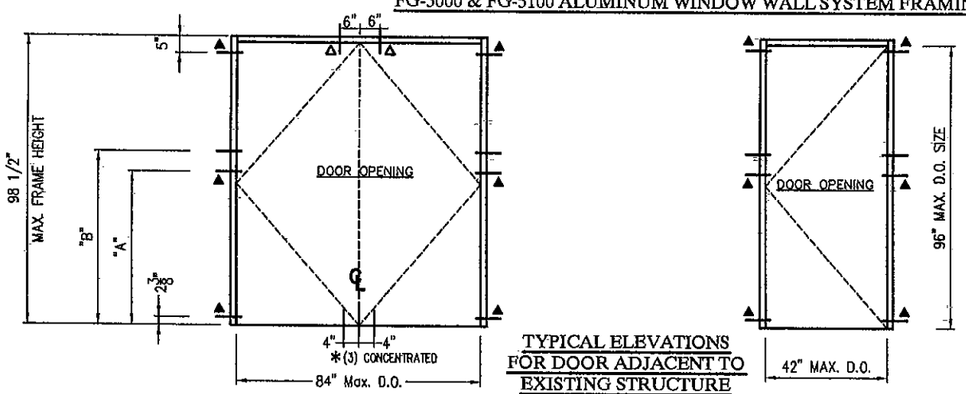

TYPICAL ELEVATIONS FOR DOOR ADJACENT TO EXISTING STRUCTURE

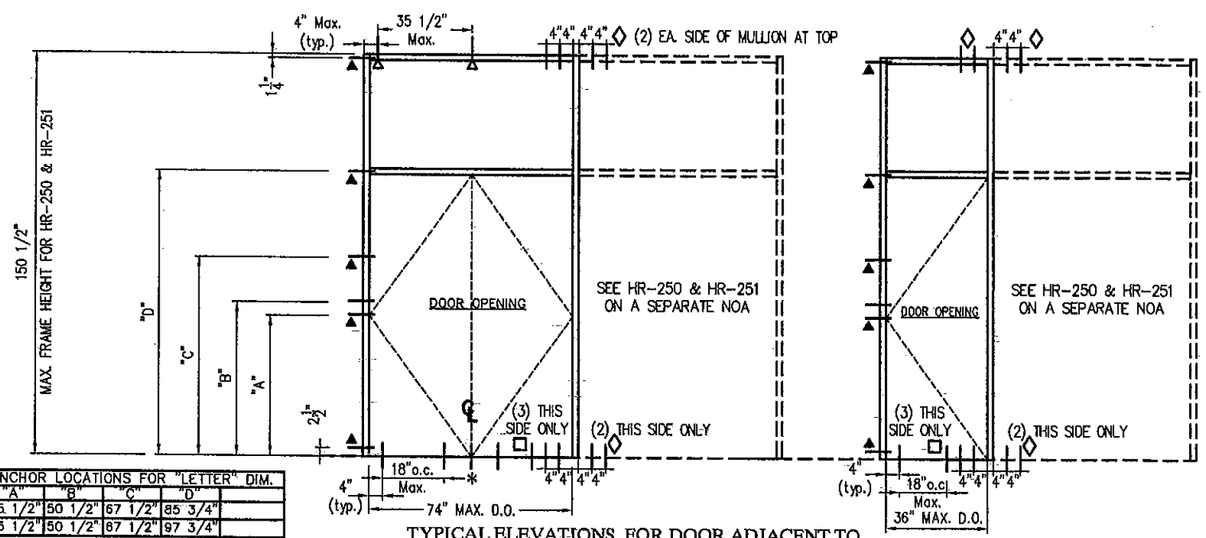

D.O. HGT.	ANCHOR LOCATIONS FOR "LETTER" DIM. "A"	"B"	"C"	"D"
84"	45 1/2"	50 1/2"	67 1/2"	85 3/4"
96"	45 1/2"	50 1/2"	67 1/2"	97 3/4"

TYPICAL ELEVATIONS FOR DOOR ADJACENT TO HR-250 & HR-251 CAPTURE CURTAIN WALL SYSTEM FRAMING

PERIMETER FRAME FASTENER LOCATIONS

FASTENERS LEGEND

- △ : AT HEADER
- ▲ : AT JAMB
- ✻ : AT THRESHOLD
- ◇ : AT MULLION AT TOP OR AT MULLION AT BOTTOM WINDOW WALL SIDE
- □ : AT MULLION THRESHOLD SIDE

TYPICAL INSTALLATION INTO: CONCRETE SUBSTRATE MIN. 3000 p.s.i.

FASTENERS TYPES AT △

A - 3/8"Ø HILTI KWIK BOLT TZ ANCHOR W/ 2" Min. EMBEDMENT INTO 6" Min. THICK POURED CONCRETE (Min. f'c = 3 ksi) BEYOND ANY FINISH MATERIAL, W/ 4" MIN. EDGE DISTANCE.

B - 3/8"Ø POWER FASTENERS TAPPER ANCHOR W/ 1 3/4" Min. EMBEDMENT INTO POURED CONCRETE (Min. f'c = 3 ksi) BEYOND ANY FINISH MATERIAL, W/ 4 1/2" MIN. EDGE DISTANCE.

C - 3/8"Ø HILTI HUS-H SCREW ANCHOR W/ 2" Min. EMBEDMENT INTO POURED CONCRETE (Min. f'c = 3 ksi) BEYOND ANY FINISH MATERIAL, W/ 5" MIN. EDGE DISTANCE.

FASTENERS TYPE AT ✻

F - 1/4"Ø F.H. ELCO TEXTRON TAPCON ANCHOR W/ 1 3/4" Min. EMBEDMENT INTO 6" Min. THICK POURED CONCRETE (Min. f'c = 3,192 ksi) BEYOND ANY FINISH MATERIAL, W/ 2 1/2" MIN. EDGE DISTANCE.

FASTENERS TYPES AT ◇

A - 3/8"Ø HILTI KWIK BOLT TZ ANCHOR W/ 2" Min. EMBEDMENT INTO 6" Min. THICK POURED CONCRETE (Min. f'c = 3 ksi) BEYOND ANY FINISH MATERIAL, W/ 4" MIN. EDGE DISTANCE.

C' - 1/2"Ø HILTI HUS-H SCREW ANCHOR W/ 2" Min. EMBEDMENT INTO POURED CONCRETE (Min. f'c = 3 ksi) BEYOND ANY FINISH MATERIAL, W/ 5" MIN. EDGE DISTANCE.

FASTENERS TYPE AT □

I - 3/8"Ø F.H. POWERS FASTENERS TAPPER SCREW ANCHOR W/ 1 3/4" MIN. EMBEDMENT INTO POURED CONCRETE (MIN. F'C = 3 KSI) BEYOND ANY FINISH MATERIAL, W/ 6" MIN. EDGE DISTANCE.

FASTENERS TYPES AT ▲

A' - 3/8"Ø HILTI KWIK BOLT 3 ANCHOR W/ 2 1/2" Min. EMBEDMENT INTO 6" Min. THICK POURED CONCRETE(Min. f'c = 3 ksi) BEYOND ANY FINISH MATERIAL, W/ 4" MIN. EDGE DISTANCE.

B - 3/8"Ø POWER FASTENERS TAPPER ANCHOR W/ 1 3/4" Min. EMBEDMENT INTO POURED CONCRETE (Min. f'c = 3 ksi) BEYOND ANY FINISH MATERIAL, W/ 4 1/2" MIN. EDGE DISTANCE.

C - 3/8"Ø HILTI HUS-H SCREW ANCHOR W/ 2" Min. EMBEDMENT INTO POURED CONCRETE (Min. f'c = 3 ksi) BEYOND ANY FINISH MATERIAL, W/ 5" MIN. EDGE DISTANCE.

TYPICAL INSTALLATION INTO: GROUT FILLED CONCRETE BLOCK SUBSTRATE

FASTENERS TYPES AT ▲ & △

A - 3/8"Ø HILTI KWIK BOLT 3 ANCHOR W/ 2" Min. EMBEDMENT INTO GROUT FILLED CONCRETE BLOCK BEYOND ANY FINISH MATERIAL, W/ 4" MIN. EDGE DISTANCE.

B - 3/8"Ø POWER FASTENERS TAPPER ANCHOR W/ 1 3/4" Min. EMBEDMENT INTO GROUT FILLED CONCRETE BLOCK BEYOND ANY FINISH MATERIAL, W/ 3" MIN. EDGE DISTANCE.

C - 3/8"Ø HILTI HUS-H SCREW ANCHOR W/ 2 3/4" Min. EMBEDMENT INTO GROUT FILLED CONCRETE BLOCK BEYOND ANY FINISH MATERIAL, W/ 2 3/4" MIN. EDGE DISTANCE.

FLORIDA BUILDING CODE (High Velocity Hurricane Zone)

SERIES MSD-375 ALUMINUM MEDIUM STILE ENTRANCE DOOR (WET GLAZED) LARGE & SMALL MISSILE IMPACT

Oldcastle BuildingEnvelope™
803 Airport Rd - Terrell, TX 75160
www.OldcastleBE.com - Phone 800-869-4567

REV. No	DESCRIPTION	DATE	REV. No	DESCRIPTION	DATE
1	OLD DWG 09-205	12/06/10	3		
2			4		

L.G./M.C.V. DRAWN BY:
12/06/10 DATE
10-078 DRAWING No
SHEET 21 OF 24

©2010 TILTECO, INC

TILTECO INC.
TILLIT TESTING & ENGINEERING COMPANY
6355 N.W. 36th. St., Ste. 305, VIRGINIA GARDENS, FL 33166
Phone : (305)871-1530 , Fax : (305)871-1531
e-mail: tilteco@aol.com
EB-0006719
WALTER A. TILLIT Jr., P.E.
FLORIDA Lic. # 44167

WALTER A. TILLIT JR. LICENSE No. 44167 STATE OF FLORIDA PROFESSIONAL ENGINEER

P.E. SIGNATURE DATE

PRODUCT REVISED as complying with the Florida Building Code Acceptance No 10-1214.16 Expiration Date 02/14/2015
By Miami Dade Product Control

MIAMI-DADE COUNTY

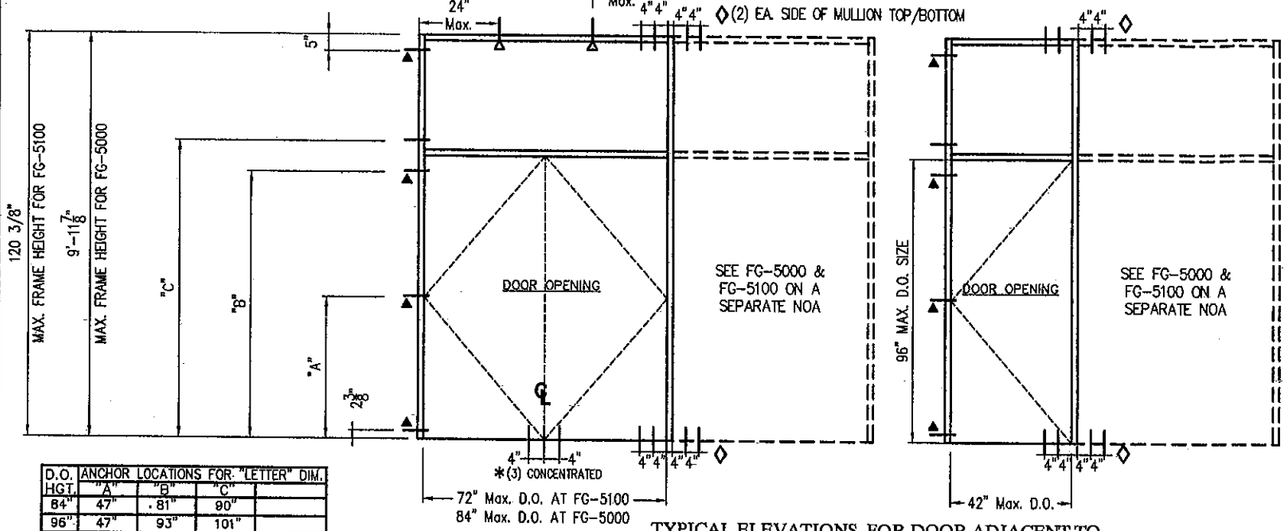

D.O. HGT.	ANCHOR LOCATIONS FOR "LETTER" DIM. "A"	"B"	"C"	
84"	47"	81"	90"	
96"	47"	93"	101"	

TYPICAL ELEVATIONS FOR DOOR ADJACENT TO FG-5000 & FG-5100 ALUMINUM WINDOW WALL SYSTEM FRAMING

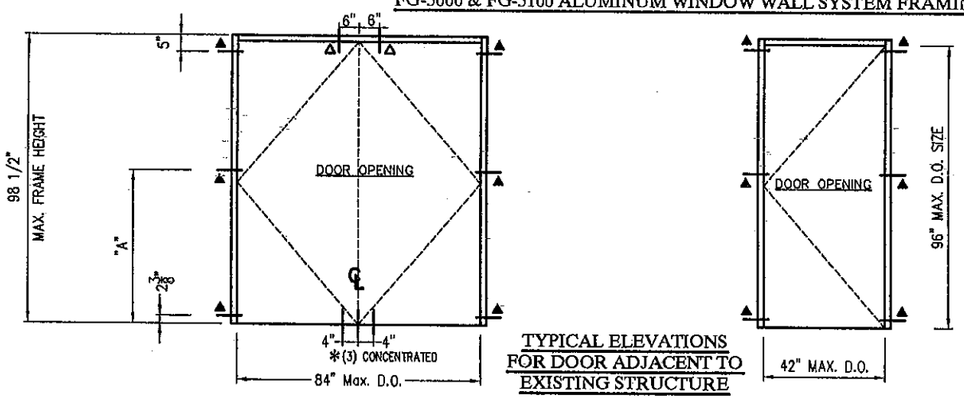

TYPICAL ELEVATIONS FOR DOOR ADJACENT TO EXISTING STRUCTURE

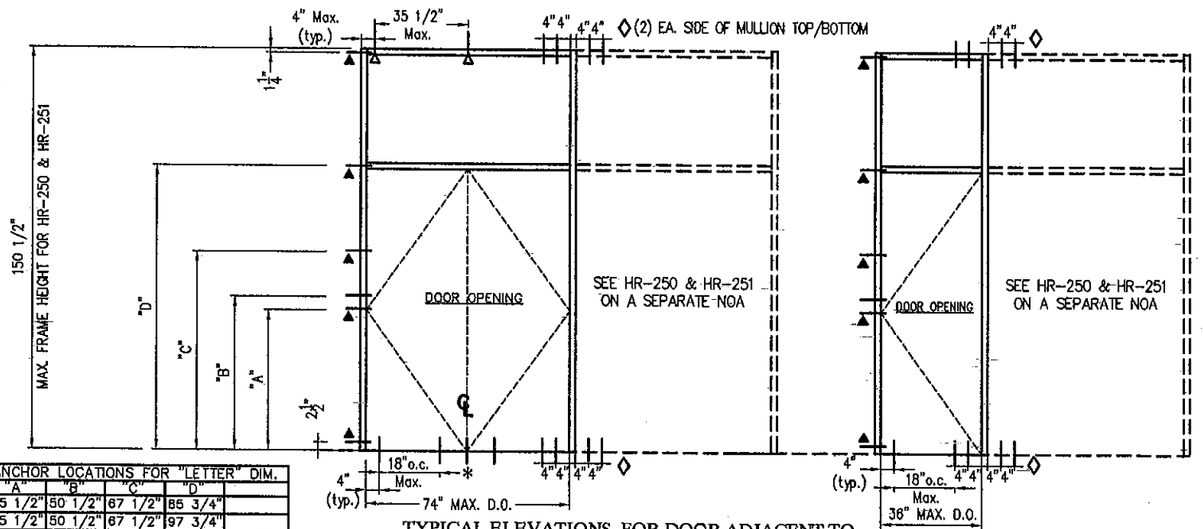

D.O. HGT.	ANCHOR LOCATIONS FOR "LETTER" DIM. "A"	"B"	"C"	"D"	
84"	45 1/2"	50 1/2"	67 1/2"	85 3/4"	
96"	45 1/2"	50 1/2"	67 1/2"	97 3/4"	

TYPICAL ELEVATIONS FOR DOOR ADJACENT TO HR-250 & HR-251 CAPTURE CURTAIN WALL SYSTEM FRAMING

PERIMETER FRAME FASTENER LOCATIONS

FASTENERS LEGEND

- △ : AT HEADER
- ▲ : AT JAMB
- * : AT THRESHOLD
- ◊ : AT MULLION TOP/BOTTOM

TYPICAL INSTALLATION INTO: 1/8" THICK ASTM A-36 STEEL SUBSTRATE

FASTENERS TYPES AT ▲, △ & ◊

D - 3/8"Ø F.H. TYPE "F" BOLT TO 1/4" Min. THK. ASTM A-36 STEEL W/ 3/4" MIN. EDGE DISTANCE OR 3/8"Ø -16 F.H. SAE GRADE 5 GALVANIZED STEEL HHB THRU BOLT W/ NUT & LOCK WASHER TO 1/8" Min. THK. ASTM A-36 STEEL.

FASTENERS TYPE AT *

G - 1/4"Ø F.H. TYPE "F" BOLT TO 1/4" Min. THK. ASTM A-36 STEEL W/ 1/2" MIN. EDGE DISTANCE.

FLORIDA BUILDING CODE (High Velocity Hurricane Zone)

©2010 TILTECO, INC

TILTECO INC.
TILLIT TESTING & ENGINEERING COMPANY
6355 N.W. 36th. St. Ste. 305, VIRGINIA GARDENS, FL. 33166
Phone : (305)871-1530, Fax : (305)871-1531
e-mail: tilteco@aol.com
EB-0006719
WALTER A. TILLIT Jr. P.E.
FLORIDA Lic. # 44167

SERIES MSD-375 ALUMINUM MEDIUM STILE ENTRANCE DOOR (WET GLAZED) LARGE & SMALL MISSILE IMPACT

Oldcastle BuildingEnvelope™
803 Airport Rd - Terrell, TX 75160
www.OldcastleBE.com - Phone 800-869-4567

REV. No	DESCRIPTION	DATE	REV. No	DESCRIPTION	DATE
1	OLD DWG 09-205	12/06/10	3		
2			4		

L.G./M.C.V. DRAWN BY:
12/06/10 DATE
10-078 DRAWING No
SHEET 22 OF 24

WALTER A. TILLIT JR. LICENSE No. 44167 STATE OF FLORIDA PROFESSIONAL ENGINEER

P.E. SIGNATURE/DATE

PRODUCT REVISED as complying with the Florida Building Code
Acceptance No 10-1214.16
Expiration Date 02/17/2015
By Miami Dade Product Control

MIAMI-DADE COUNTY

PERIMETER FRAME FASTENER LOCATIONS

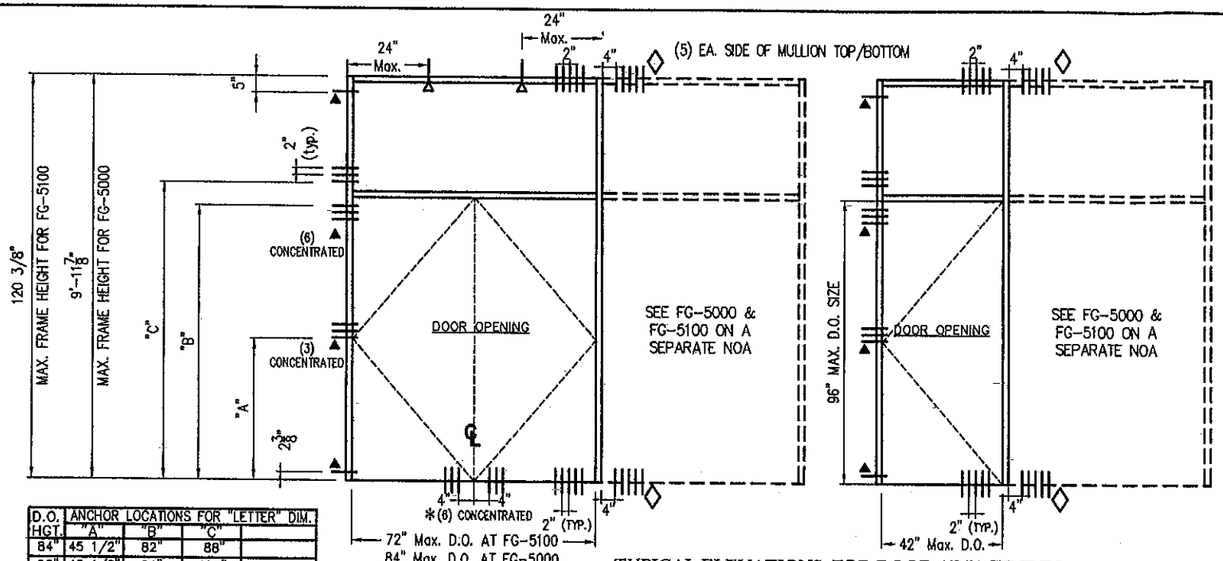

D.O. HGT.	ANCHOR LOCATIONS FOR "LETTER" DIM. "A"	"B"	"C"
84"	45 1/2"	82"	88"
96"	45 1/2"	94"	100"

TYPICAL ELEVATIONS FOR DOOR ADJACENT TO FG-5000 & FG-5100 ALUMINUM WINDOW WALL SYSTEM FRAMING

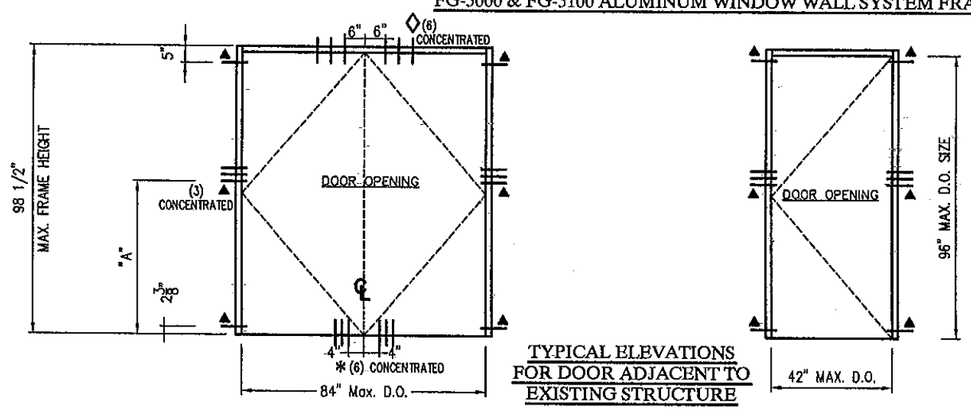

TYPICAL ELEVATIONS FOR DOOR ADJACENT TO EXISTING STRUCTURE

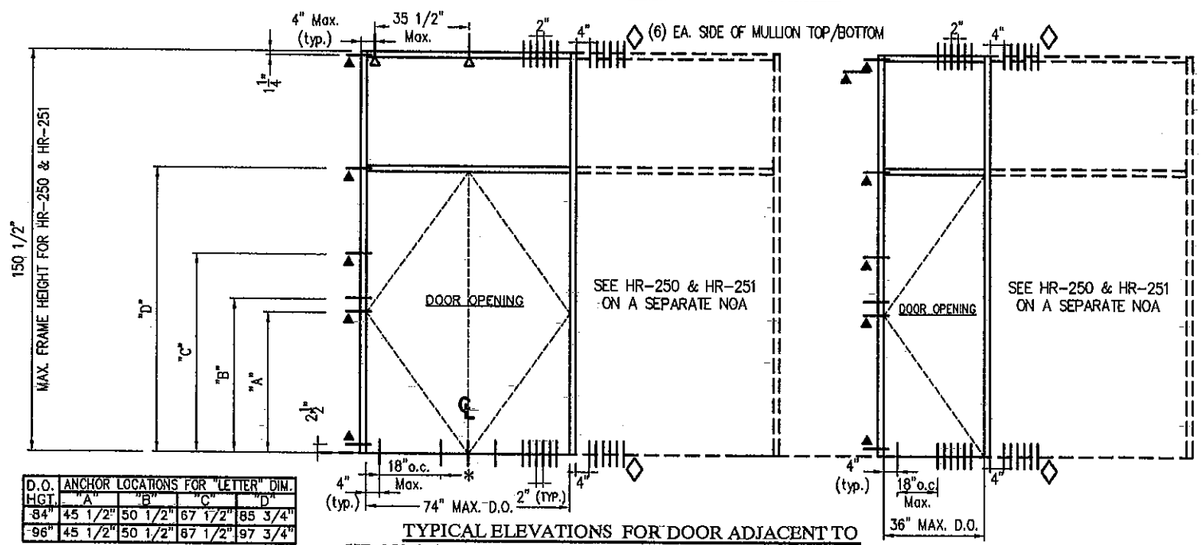

D.O. HGT.	ANCHOR LOCATIONS FOR "LETTER" DIM. "A"	"B"	"C"	"D"
84"	45 1/2"	50 1/2"	67 1/2"	85 3/4"
96"	45 1/2"	50 1/2"	67 1/2"	97 3/4"

TYPICAL ELEVATIONS FOR DOOR ADJACENT TO HR-250 & HR-251 CAPTURE CURTAIN WALL SYSTEM FRAMING

FASTENERS LEGEND

- △ : AT HEADER
- ▲ : AT JAMB
- * : AT THRESHOLD
- ◇ : AT MULLION TOP/BOTTOM & AT TOP OF DOOR ADJACENT TO EXISTING STRUCTURE

TYPICAL INSTALLATION INTO: WOOD SUBSTRATE

FASTENERS TYPE AT ▲ & △

E - 3/8"Ø LAG SCREWS TO DOUBLE BUCK (G=0.55) W/ 3" Min. PENETRATION INTO WOOD W/ 1-1/2" MIN. EDGE DISTANCE.

FASTENERS TYPE AT *

H- 1/4"Ø F.H. WOOD SCREWS TO DOUBLE BUCK (G=0.55) W/ 3" Min. PENETRATION INTO WOOD W/ 1" MIN. EDGE DISTANCE.

FASTENERS TYPE AT ◇

E' - 24 GAGE (0.372" O.D.) F.H. WOOD SCREWS TO DOUBLE BUCK (G=0.55) W/ 3" Min. PENETRATION INTO WOOD W/ 2" MIN. EDGE DISTANCE.

FLORIDA BUILDING CODE (High Velocity Hurricane Zone)

©2010 TILTECO, INC

TILTECO INC.
TILLIT TESTING & ENGINEERING COMPANY
6355 N.W. 36th. St., Ste. 305, VIRGINIA GARDENS, FL 33166
Phone : (305)871-1530 , Fax : (305)871-1531
e-mail: tilteco@aol.com
EB-0006719
WALTER A. TILLIT Jr., P.E.
FLORIDA Lic. # 44167

WALTER A. TILLIT JR. LICENSE No. 44167 STATE OF FLORIDA PROFESSIONAL ENGINEER

P.E. SIGNATURE/DATE

PRODUCT REVISED
as complying with the Florida Building Code
Acceptance No 12-1214.16
Expiration Date 02.17.2012
By Miami Dade Product Control

MIAMI-DADE COUNTY

SERIES MSD-375 ALUMINUM MEDIUM STILE ENTRANCE DOOR (WET GLAZED) LARGE & SMALL MISSILE IMPACT

Oldcastle BuildingEnvelope™
803 Airport Rd - Terrell, TX 75160
www.OldcastleBE.com - Phone 800-869-4567

REV. No	DESCRIPTION	DATE	REV. No	DESCRIPTION	DATE
1	OLD DWG 09-205	12/06/10	3		
2			4		

L.G./M.C.V. DRAWN BY:
12/06/10 DATE
10-078 DRAWING No
SHEET 23 OF 24

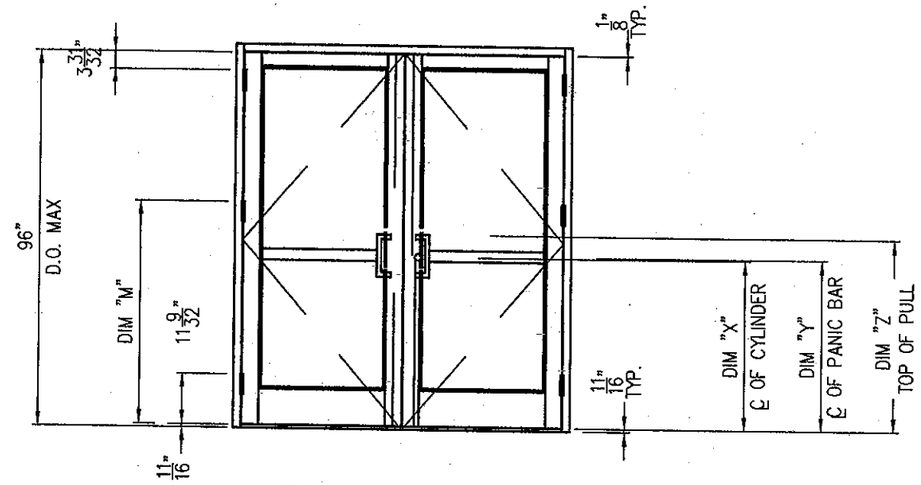

PANIC DOORS
WITH 1 1/2 PAIR BUTT HINGES

MANUFACTURER	PANIC DEVICE	DIM "X"	DIM "Y"	DIM "Z"
JACKSON	1286	37 3/16	37 15/32	42 3/16
JACKSON	2086	37 3/16	37 15/32	42 3/16
VON DUPRIN	9927	39 3/8	39 3/8	44 3/8
VON DUPRIN	9947	39 15/16	39 3/8	44 3/8
SARGENT	8410	51 1/8	40 3/8	42 3/16

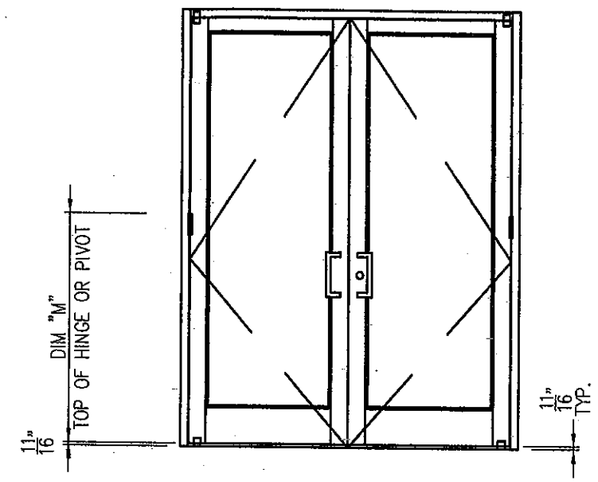

DOOR WITH 1 1/2 PAIR
OFFSET PIVOTS

DOOR HEIGHT	DIM "M"
84"	43 27/32"
96"	49 27/32"

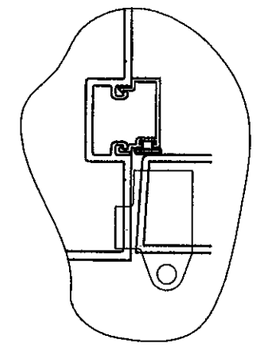

OFFSET PIVOT
DETAIL

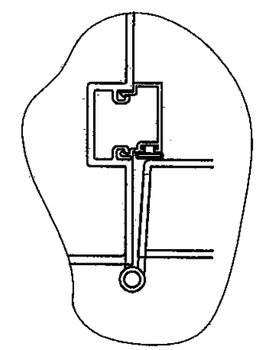

BUTT HINGE
DETAIL

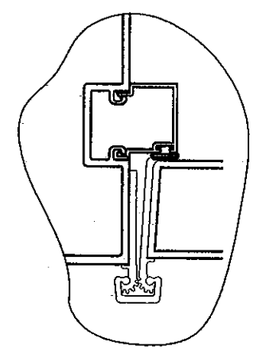

ROTON HINGE
DETAIL

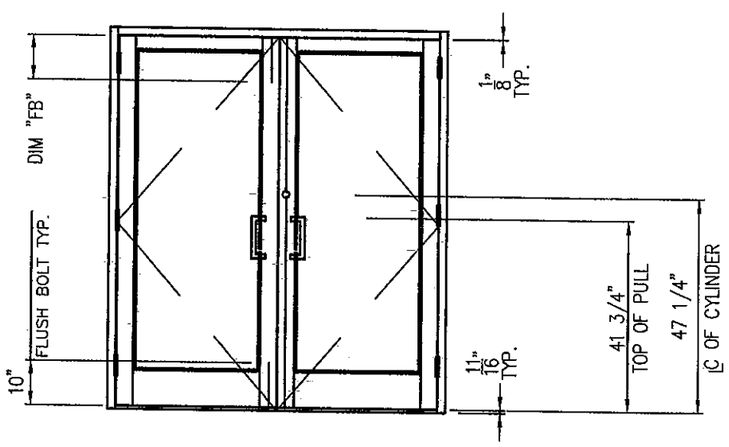

3 POINT LOCK AND FLUSH BOLT DOORS
WITH 1 1/2 PAIR BUTT HINGES

MANUFACTURER	DESCRIPTION	PART #	DIM "FB"
INTERNATIONAL	TOP FLUSH BOLT (FOR 96" TALL DOOR)	FB-1201-VRM-96	22"
INTERNATIONAL	TOP FLUSH BOLT (FOR 84" TALL DOOR)	FB-1201-VRM	10"
INTERNATIONAL	BOTTOM FLUSH BOLT (FOR 84"/96" TALL DOOR)	FB-1201-VRM	10"

STANDARD HARDWARE LOCATIONS FOR SERIES MSD-375 IMPACT DOORS (WET GLAZED)

OLDCASTLE GLASS ENGINEERED PRODUCTS. LOCK CYLINDERS USED ON ALL DOORS.

FLORIDA BUILDING CODE (High Velocity Hurricane Zone)

©2010 TILTECO, INC

TILTECO INC.
TILLIT TESTING & ENGINEERING COMPANY
6355 N.W. 36th. St., Ste. 305, VIRGINIA GARDENS, FL 33166
Phone : (305)871-1530 . Fax : (305)871-1531
e-mail: tilteco@aol.com
EB-0006719
WALTER A. TILLIT Jr. P.E.
FLORIDA Lic. # 44167

SERIES MSD-375 ALUMINUM MEDIUM STILE ENTRANCE DOOR (WET GLAZED)
LARGE & SMALL MISSILE IMPACT

Oldcastle BuildingEnvelope™
803 Airport Rd - Terrell, TX 75160
www.OldcastleBE.com - Phone 800-869-4567

REV. No	DESCRIPTION	DATE	REV. No	DESCRIPTION	DATE
1	OLD DWG 09-205	12/06/10	3		
2			4		

L.G./M.C.V.
DRAWN BY:

12/06/10
DATE

10-078
DRAWING No

SHEET 24 OF 24

WALTER A. TILLIT JR.
LICENSE
No. 44167
STATE OF FLORIDA
PROFESSIONAL ENGINEER

P.E. SIGNATURE/DATE

PRODUCT REVISED
as complying with the Florida Building Code
Acceptance No 10-1214.16
Expiration Date 02/17/2015
By [signature]
Miami Dade Product Control

MIAMI-DADE COUNTY