MIAMI-DADE COUNTY
BUILDING AND NEIGHBORHOOD COMPLIANCE DEPARTMENT (BNC)
BOARD AND CODE ADMINISTRATION DIVISION

MIAMI-DADE COUNTY
PRODUCT CONTROL SECTION
11805 SW 26 Street, Room 208
Miami, Florida 33175-2474
T (786) 315-2590 F (786) 315-2599
www.miamidade.gov/building

NOTICE OF ACCEPTANCE (NOA)

Amarr Garage Doors
165 Carriage Court
Winston Salem, NC 27105

SCOPE:

This NOA is being issued under the applicable rules and regulations governing the use of construction materials. The documentation submitted has been reviewed by Miami-Dade County Product Control Section and accepted by the Board of Rules and Appeals (BORA) to be used in Miami Dade County and other areas where allowed by the Authority Having Jurisdiction (AHJ).

This NOA shall not be valid after the expiration date stated below. The Miami-Dade County Product Control Section (In Miami-Dade County) and/or the AHJ (in areas other than Miami-Dade County) reserve the right to have this product or material tested for quality assurance purposes. If this product or material fails to perform in the accepted manner, the manufacturer will incur the expense of such testing and the AHJ may immediately revoke, modify, or suspend the use of such product or material within their jurisdiction. BORA reserves the right to revoke this acceptance, if it is determined by Miami-Dade County Product Control Section that this product or material fails to meet the requirements of the applicable building code. This product is approved as described herein, and has been designed to comply with the Florida Building Code, including the High Velocity Hurricane Zone.

DESCRIPTION: Models 950/655 1000 & 2000 Steel Sectional Garage Door (18'-0" Wide)

APPROVAL DOCUMENT: Drawing No. **IRC-9518-165-26-G**, titled "Model #655 Oak Summit Series and Model # 950 Heritage Series 1000 & 2000" sheets 1 through 3 of 3, dated 08/09/10, prepared by Amarr Garage Doors, signed and sealed by Thomas L. Shelmerdine, P.E., bearing the Miami-Dade County Product Control approval stamp with the Notice of Acceptance number and approval date by the Miami-Dade County Product Control Section.

MISSILE IMPACT RATING: Large and Small Missile Impact Resistant

LABELING: Each unit shall bear a permanent label with the manufacturer's name or logo, city, state and following statement: "Miami-Dade County Product Control Approved", unless otherwise noted herein.

RENEWAL of this NOA shall be considered after a renewal application has been filed and there has been no change in the applicable building code negatively affecting the performance of this product.

TERMINATION of this NOA will occur after the expiration date or if there has been a revision or change in the materials, use, and/or manufacture of the product or process. Misuse of this NOA as an endorsement of any product, for sales, advertising or any other purposes shall automatically terminate this NOA. Failure to comply with any section of this NOA shall be cause for termination and removal of NOA.

ADVERTISEMENT: The NOA number preceded by the words Miami-Dade County, Florida, and followed by the expiration date may be displayed in advertising literature. If any portion of the NOA is displayed, then it shall be done in its entirety.

INSPECTION: A copy of this entire NOA shall be provided to the user by the manufacturer or its distributors and shall be available for inspection at the job site at the request of the Building Official.

This NOA consists of this page 1 and evidence page E-1, as well as approval document mentioned above.

The submitted documentation was reviewed by **Carlos M. Utrera, P.E.**

MIAMI-DADE COUNTY APPROVED

03/02/11

NOTICE OF ACCEPTANCE: EVIDENCE SUBMITTED

A. DRAWINGS

1. Drawing No. **IRC-9518-165-26-G**, titled "Model #655 Oak Summit Series and Model # 950 Heritage Series 1000 & 2000" sheets 1 through 3 of 3, dated 08/09/10, prepared by Amarr Garage Doors, signed and sealed by Thomas L. Shelmerdine, P.E.

B. TESTS

1. Test reports on: 1) Uniform Static Air Pressure Test, Loading per FBC, TAS 202-94
   2) Large Missile Impact Test per FBC, TAS 201-94
   3) Cyclic Wind Pressure Loading per FBC, TAS 203-94
   4) Forced Entry Test, per FBC 2411 3.2.1, TAS 202-94
   5) Tensile Test per ASTM E8

   along with installation diagram on three Model 500 Classica Steel Sectional Garage Doors, prepared by American Test Lab, Inc, Test Report No. **ATLNC 0802.01-10R**, dated 11/03/10, signed and sealed by David W. Johnson, P.E.
2. Test report on Salt Spray per ASTM B117 of painted G40 galvanized coated panels, prepared by ETC Laboratories, Test Report No. **07-816-20337.0**, dated 03/24/08, signed by Joseph L. Doldan, P.E. ***"Submitted under NOA # 08-0718.01"***

C. CALCULATIONS:

1. Bracket to wood jamb and wood jamb to structure attachments, prepared by Structural Solutions, P.A., dated 12/05/10, signed and sealed by Thomas L. Shelmerdine, P.E.

D. QUALITY ASSURANCE

1. Miami-Dade Building and Neighborhood Compliance Department (BNC)

E. MATERIAL CERTIFICATIONS

1. None.

F. STATEMENTS

1. Statement letter of code conformance with FBC 2007 and no financial interest, issued by Structural Solutions, P.A., dated 12/09/10, signed and sealed by Thomas L. Shelmerdine, P.E.

03/02/11

Carlos M. Utrera, P.E.
Product Control Examiner
NOA No. 10-1222.02
Expiration Date: March 24, 2016
Approval Date: March 24, 2011

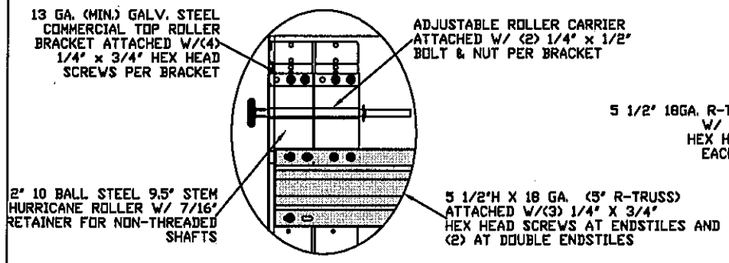

TYPICAL TOP FIXTURES (1)
N.T.S.

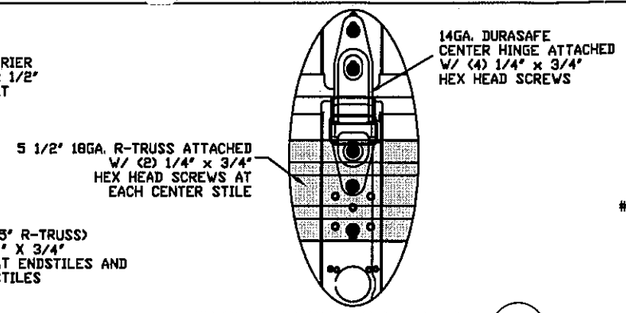

TYPICAL DURASAFE CENTER HINGE (2)
N.T.S.

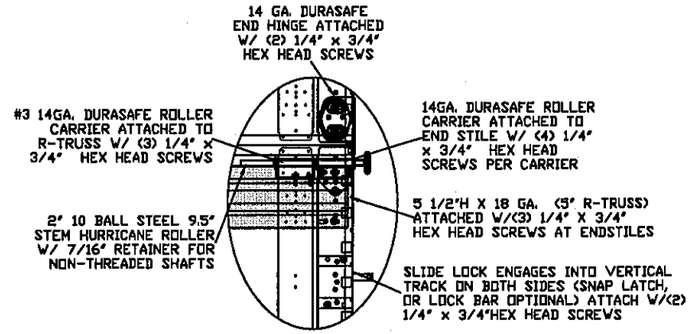

TYPICAL DURASAFE END HINGE (3)
N.T.S.

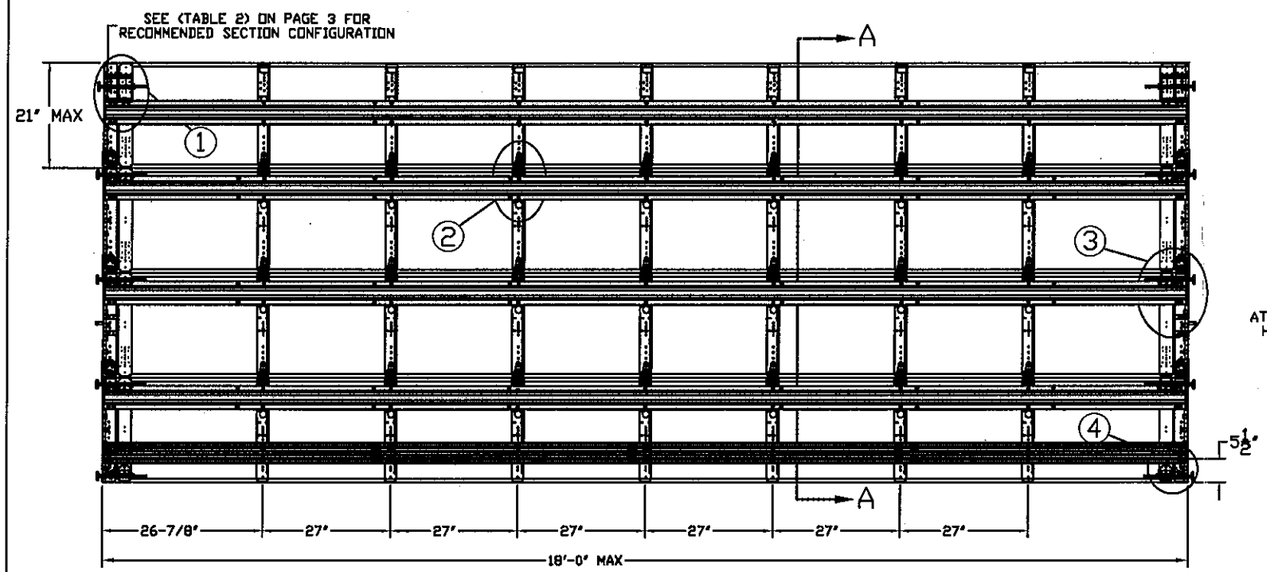

INSIDE ELEVATION
N.T.S.

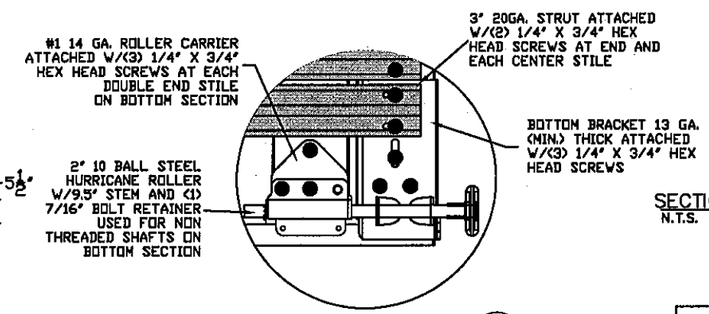

TYPICAL BOTTOM BRACKET (4)
N.T.S.

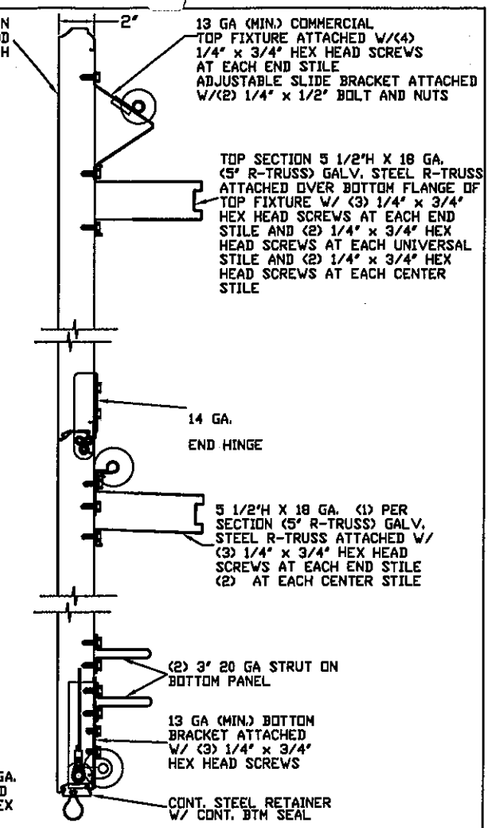

SECTION A-A (SIDE VIEW)
N.T.S.

INTERIOR OF GARAGE

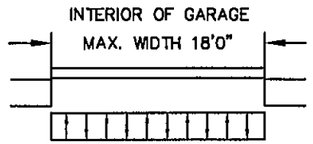

VERTICAL JAMB DESIGN LOADS
+378.0 LBS/FT
-414.0 LBS/FT

SEE NOTE 2 ON PAGE 2

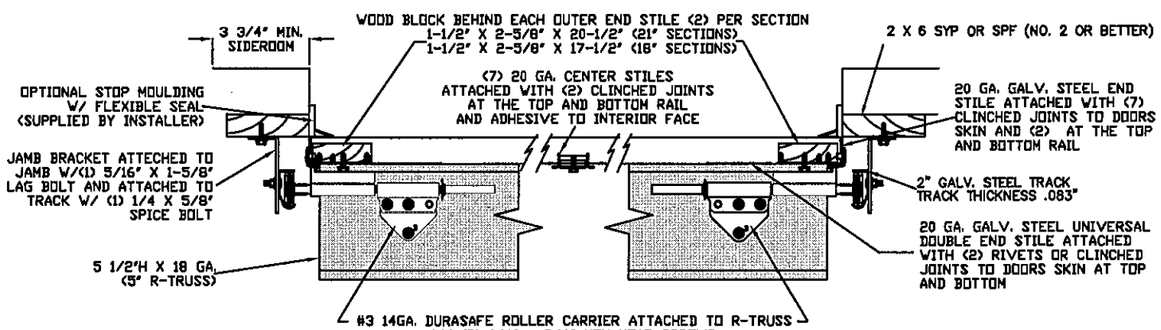

TRACK MOUNTING DETAIL
N.T.S.

Approved as complying with the Florida Building Code
Date 03/24/2011
NOA# 10-1222.02
Miami Dade Product Control
By

MAX SIZE 18' x 14'
DESIGN LOADS
+42.0 PSF
-46.0 PSF
LARGE MISSLE IMPACT RESISTANCE

THOMAS L. SHELMERDINE LICENSE No 0048579 STATE OF FLORIDA PROFESSIONAL ENGINEER

Amarr
165 CARRIAGE COURT WINSTON-SALEM, N.C. 27103 WWW.AMARR.COM

MODEL #655 OAK SUMMIT SERIES 1000 & 2000
MODEL #950 HERITAGE SERIES 1000 & 2000

SIZE	DRAWN BY	DRC	DATE	08/09/10	DRAWING NUMBER
B	CHECKED BY	BHJ	DATE	08/09/10	IRC-9518-165-26-G

ENGINEER: THOMAS L. SHELMERDINE P.E. LIC. No. 0048579 | SHEET 1 OF 3

SPECIFICATIONS AND NOTES

1. ALL THE LOAD FROM THE DOOR IS TRANSFERRED TO THE VERTICAL TRACK, FROM THE TRACK THE LOAD IS TRANSFERRED TO THE VERTICAL JAMBS. THE HORIZONTAL JAMB OR HEADER RECEIVES NO PORTION OF THE LOAD TRANSFERRED FROM THE DOOR.
2. EACH VERTICAL JAMBS RECEIVES MAXIMUM DESIGN LOADS OF: +378.0 LBS/FT & −414.0 LBS/FT
3. DOOR AND HARDWARE WILL BE DESIGNED, MANUFACTURED AND INSTALLED WITH STANDARDS AS SET FORTH BY DASMA.
4. DOOR SECTIONS SHALL BE 24 GA. (.022) MIN. EXTERIOR SKIN ROLLED FORMED, G-40 GALVANIZATION W/ BAKED ON POLYESTER FINISH
5. DOORS USE (1) 5.5" 18GA R-TRUSS PER SECTION AND (2) 3" 20GA STRUT ON THE BOTTOM SECTION.
6. REFER TO TABLE 2 ON PAGE 3 FOR SECTION CONFIGURATION.
7. SUPPORTING STRUCTURAL ELEMENTS SHALL BE DESIGNED BY A REGISTRED PROFESSIONAL ENGINEER FOR WIND LOADS INDICATED ON THIS DRAWING IN ADDITION TO OTHER LOADINGS.
8. THE METHOD OF TESTING WAS IN SUBSTANTIAL CONFORMANCE WITH THE PROCEDURES DESCRIBED IN ASTM E330-02, E1996, ASCE 7-02, AND FLA.. BUILDING CODE PROTOCALS TAS 201, 202, 203 WIND LOAD DESIGN CRITERIA.
9. THIS APPROVAL REQUIRES THE MANUFACTURER TO DO TESTING OF ALL COILS USED TO FABRICATE DOOR PANELS UNDER THIS NOTICE OF ACCEPTANCE. A MINIMUM OF 2 SPECIMENS SHALL BE CUT FROM EACH COIL AND TENSILE TESTED ACCORDING TO ASTM E-8 BY A DADE COUNTY APPROVED LAB SELECTED AND PAID BY THE MANUFACTURER. EVERY 3 MONTHS, 4 TIMES A YEAR, THE MANUFACTURER SHALL MAIL TO THIS OFFICE: A COPY OF THE TEST REPORTS WITH CONFIRMATION THAT THE SPECIMENS WERE SELECTED FROM COILS AT THE MANUFACTURER PRODUCTION FACILITIES. AND A NOTARIZED STATEMENT FROM THE MANUFACTURER THAT ONLY COILS WITH YIELD STRENGTH OF 30,000 PSI OR MORE SHALL BE USED TO MAKE DOOR PANELS FOR DADE COUNTY UNDER THIS NOTICE OF ACCEPTANCE.

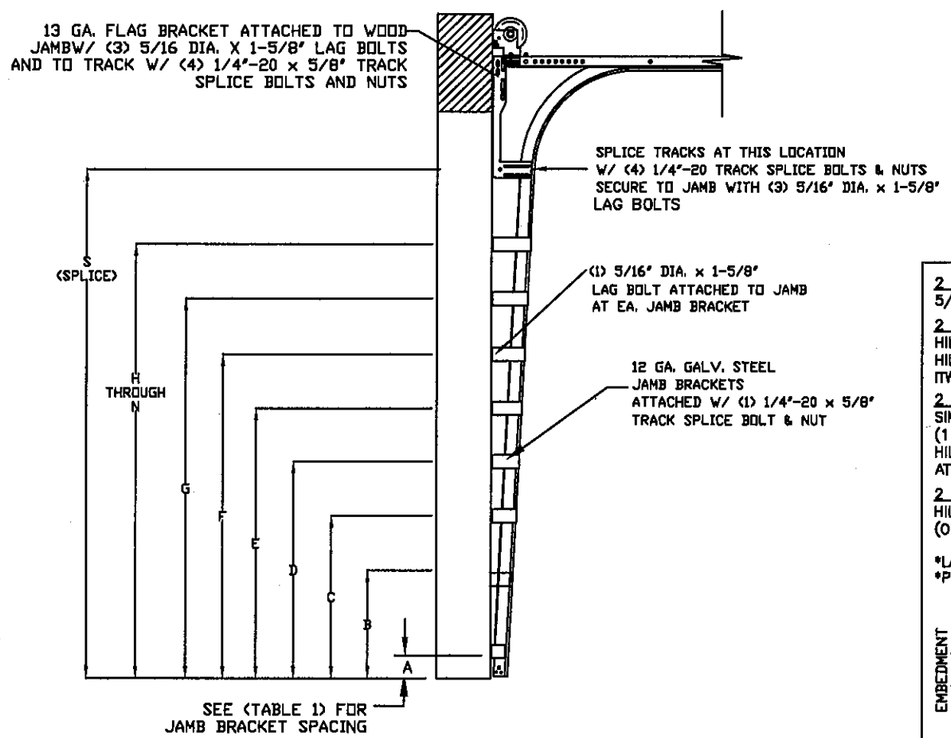

STANDARD TRACK CONFIGURATION FOR 6'6" UP TO 14' TALL DOORS
N.T.S.

TABLE 1

DOOR HEIGHT	TRACK ATTACHMENT														SPLICE
	A	B	C	D	E	F	G	H	I	J	K	L	M	N	S
6'6"	3"	14"	27"	38"	48"	58"	68"								70"
7'	3"	14"	27"	38"	48"	58"	68"								76"
7'6"	3"	14"	27"	38"	48"	58"	68"	78"							82"
8'	3"	14"	27"	38"	48"	58"	68"	78"							88"
8'6"	3"	14"	27"	38"	48"	58"	68"	78"	88"						94"
9'	3"	14"	27"	38"	48"	58"	68"	78"	88"						100"
9'6"	3"	14"	27"	38"	48"	58"	68"	78"	88"	98"					106"
10'	3"	14"	27"	38"	48"	58"	68"	78"	88"	100"					112"
10'6"	3"	14"	27"	38"	48"	58"	68"	78"	88"	100"	110"				118"
11'	3"	14"	27"	38"	48"	58"	68"	78"	88"	100"	110"				124"
11'6"	3"	14"	27"	38"	48"	58"	68"	78"	88"	100"	110"	120"			130"
12'	3"	14"	27"	38"	48"	58"	68"	78"	88"	100"	110"	122"			136"
12'6"	3"	14"	27"	38"	48"	58"	68"	78"	88"	100"	110"	122"	132"		142"
13'	3"	14"	27"	38"	48"	58"	68"	78"	88"	100"	114"	122"	134"		148"
13'6"	3"	14"	27"	38"	48"	58"	68"	78"	88"	100"	114"	122"	134"	144"	154"
14'	3"	14"	27"	38"	48"	58"	68"	78"	88"	100"	114"	122"	134"	146"	160"

Approved as complying with the Florida Building Code
Date 03/24/2011
NOA# 10-1222.02
Miami Dade Product Control
By

WOOD JAMB ATTACHMENT TO STRUCTURE

2 X 6 VERTICAL JAMB ATTACHMENT TO WOOD FRAME STRUCTURE
5/16" X 3" LAG SCREWS STARTING 6" FROM ENDS THEN 12" O.C. (1 1/2" EMBEDMENT)

2 X 6 VERTICAL JAMB ATTACHMENT TO 2,000 PSI CONCRETE
HILTI KWIK BOLT 3/8" X 4" STARTING 6" FROM ENDS THEN 24" O.C. (2 1/2" EMBEDMENT)
HILTI SLEEVE ANCHOR 3/8" X 2-3/4" STARTING 6" FROM ENDS THEN 10" O.C. (1 1/4" EMBEDMENT)
ITW/RAMSET REDHEAD (TRU-BOLT) 3/8" X 4" STARTING 6" FROM ENDS THEN 22" O.C. (2 1/2" EMBEDMENT)

2 X 6 VERTICAL JAMB ATTACHMENT TO HOLLOW C-90 BLOCK
SIMPSON 1/4" X 3" TITEN SCREWS STARTING 6" FROM ENDS, USE PAIRS OF FASTENERS (3" APART) AT 8" O.C. (1 1/2" EMBEDMENT)
HILTI 1/4" X 2-3/4" KWIK-CON II+ SCREWS STARTING 6" FROM ENDS, USE PAIRS OF FASTENERS (3" APART) AT 8" O.C. (1 1/4" EMBEDMENT)

2 X 6 VERTICAL JAMB ATTACHMENT TO GROUTED C-90 BLOCK (2000 PSI GROUT)
HILTI SLEEVE ANCHOR 3/8" X 2-3/4" STARTING 6" FROM ENDS THEN 12" O.C. (1 1/4" EMBEDMENT)
(OR, USE FASTENERS FOR HOLLOW C-90 BLOCK)

*LAGS AND BOLTS CAN BE COUNTERSUNK TO PROVIDE A FLUSH MOUNTING SURFACE.
*PREPARATION OF WOOD JAMBS BY OTHERS

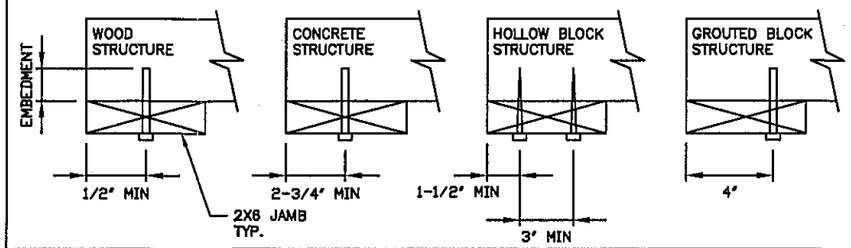

MAX SIZE 18' x 14'

DESIGN LOADS +42.0 PSF −46.0 PSF

LARGE MISSLE IMPACT RESISTANCE

THOMAS L. SHELMERDINE LICENSE No 0048579 STATE OF FLORIDA PROFESSIONAL ENGINEER

Amarr
165 CARRIAGE COURT WINSTON-SALEM, N.C. 27105 WWW.AMARR.COM

MODEL #655 OAK SUMMIT SERIES 1000 & 2000
MODEL #950 HERITAGE SERIES 1000 & 2000

SIZE	DRAWN BY	DRC	DATE	08/09/10	DRAWING NUMBER
B	CHECKED BY	BHJ	DATE	08/09/10	IRC-9518-165-26-G
ENGINEER: THOMAS L. SHELMERDINE P.E. LIC. No. 0048579					SHEET 2 OF 3

TABLE 2

DOOR HEIGHT	SECTION HEIGHTS							
	Btm	#2	#3	#4	#5	#6	#7	#8
6' 0"	18"	18"	18"	18"				
6' 6"	21"	18"	18"	21"				
7' 0"	21"	21"	21"	21"				
7' 6"	18"	18"	18"	18"	18"			
8' 0"	21"	18"	18"	18"	21"			
8' 6"	21"	21"	21"	18"	21"			
9' 0"	18"	18"	18"	18"	18"	18"		
9' 6"	21"	18"	18"	18"	18"	21"		
10' 0"	21"	21"	21"	18"	18"	21"		
10' 6"	21"	21"	21"	21"	21"	21"		
11' 0"	21"	18"	18"	18"	18"	18"	21"	
11' 6"	21"	21"	21"	18"	18"	18"	21"	
12' 0"	21"	21"	21"	21"	21"	18"	21"	
12' 6"	21"	18"	18"	18"	18"	18"	18"	21"
13' 0"	21"	21"	21"	18"	18"	18"	18"	21"
13' 6"	21"	21"	21"	21"	21"	18"	18"	21"
14' 0"	21"	21"	21"	21"	21"	21"	21"	21"

TABLE 3

DOOR HEIGHT	STRUT SPACING (BASED ON RECOMMENDED SECTION CONFIGURATION)									TOP
	A	B	C	D	E	F	G	H	I	T
6' 6"	4 1/2"	7"	16"	34"	52"					70 1/2"
7'	4 1/2"	7"	16"	37"	58"					76 1/2"
7' 6"	4 1/2"	7"	13"	31"	49"	67"				82 1/2"
8'	4 1/2"	7"	16"	34"	52"	70"				88 1/2"
8' 6"	4 1/2"	7"	16"	37"	58"	76"				94 1/2"
9'	4 1/2"	7"	13"	31"	49"	67"	85"			100 1/2"
9' 6"	4 1/2"	7"	16"	34"	52"	70"	88"			106 1/2"
10'	4 1/2"	7"	16"	37"	58"	76"	94"			112 1/2"
10' 6"	4 1/2"	7"	16"	37"	58"	79"	100"			118 1/2"
11'	4 1/2"	7"	16"	34"	52"	70"	88"	106"		124 1/2"
11' 6"	4 1/2"	7"	16"	37"	58"	76"	94"	112"		130 1/2"
12'	4 1/2"	7"	16"	37"	58"	79"	100"	118"		136 1/2"
12'6"	4 1/2"	7"	16"	34"	52"	70"	88"	106"	124"	142 1/2"
13'	4 1/2"	7"	16"	37"	58"	76"	94"	112"	130"	148 1/2"
13' 6"	4 1/2"	7"	16"	37"	58"	79"	100"	118"	136"	154 1/2"
14'	4 1/2"	7"	16"	37"	58"	79"	100"	121"	142"	160 1/2"

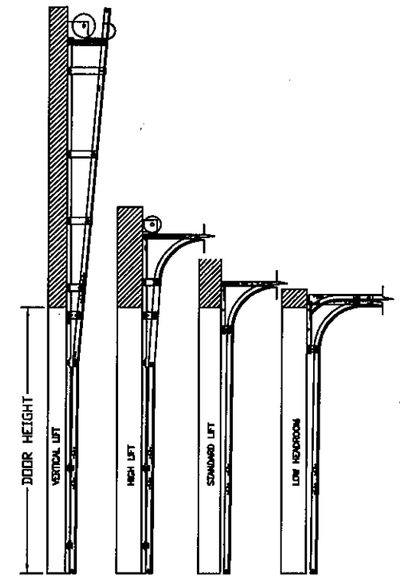

AVAILABLE TRACK CONFIGURATIONS
N.T.S.

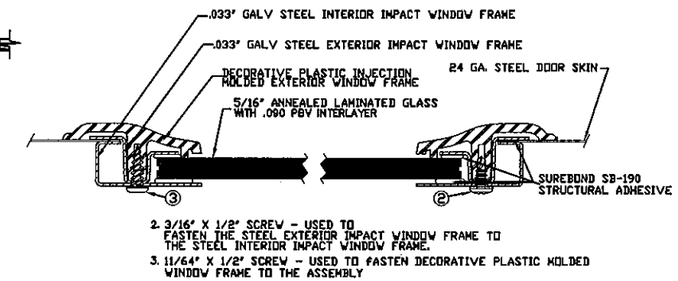

SECTION B-B IMPACT WINDOW DETAIL
N.T.S.

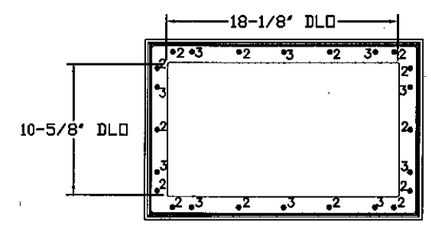

IMPACT GLAZING FASTENER DETAIL
N.T.S.

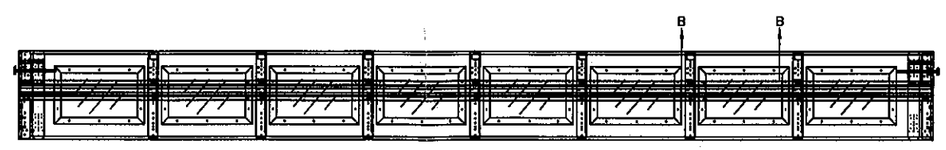

OPTIONAL SHORT PANEL GLAZED SECTION STRUT AND STILE LAYOUT

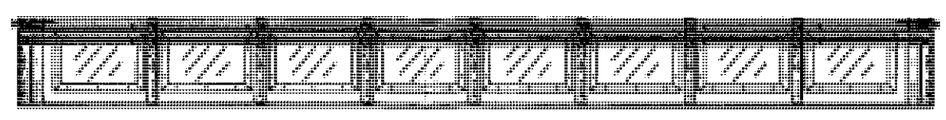

Approved as complying with the Florida Building Code
Date 03/24/2011
NOA# 10-1222.02
Miami Dade Product Control
By

MAX SIZE
18' x 14'

DESIGN LOADS
+42.0 PSF
-46.0 PSF

LARGE MISSLE IMPACT RESISTANCE

THOMAS L. SHELMERDINE LICENSE No 0048579 STATE OF FLORIDA PROFESSIONAL ENGINEER

Amarr

165 CARRIAGE COURT WINSTON-SALEM, N.C. 27105 WWW.AMARR.COM

MODEL #655 OAK SUMMIT SERIES 1000 & 2000
MODEL #950 HERITAGE SERIES 1000 & 2000

SIZE	DRAWN BY DRC	DATE 08/09/10	DRAWING NUMBER
B	CHECKED BY BHJ	DATE 08/09/10	IRC-9518-165-26-G
ENGINEER: THOMAS L. SHELMERDINE P.E. LIC. No. 0048579			SHEET 3 OF 3