MIAMI-DADE COUNTY
BUILDING AND NEIGHBORHOOD COMPLIANCE DEPARTMENT (BNC)
BOARD AND CODE ADMINISTRATION DIVISION

MIAMI-DADE COUNTY
PRODUCT CONTROL SECTION
11805 SW 26 Street, Room 208
Miami, Florida 33175-2474
T (786) 315-2590 F (786) 315-2599
www.miamidade.gov/building

NOTICE OF ACCEPTANCE (NOA)

JB Garage Door, Inc.
12195 NW 98th Avenue
Hialeah Gardens, FL 33018

SCOPE:

This NOA is being issued under the applicable rules and regulations governing the use of construction materials. The documentation submitted has been reviewed by Miami-Dade County Product Control Section and accepted by the Board of Rules and Appeals (BORA) to be used in Miami Dade County and other areas where allowed by the Authority Having Jurisdiction (AHJ).

This NOA shall not be valid after the expiration date stated below. The Miami-Dade County Product Control Section (In Miami Dade County) and/or the AHJ (in areas other than Miami Dade County) reserve the right to have this product or material tested for quality assurance purposes. If this product or material fails to perform in the accepted manner, the manufacturer will incur the expense of such testing and the AHJ may immediately revoke, modify, or suspend the use of such product or material within their jurisdiction. BORA reserves the right to revoke this acceptance, if it is determined by Miami-Dade County Product Control Section that this product or material fails to meet the requirements of the applicable building code.

This product is approved as described herein, and has been designed to comply with the Florida Building Code, including the High Velocity Hurricane Zone.

DESCRIPTION: Models 724/720 Steel Sectional Garage Door (10'-4"Wide x 18'High)

APPROVAL DOCUMENT: Drawing No. **95-17**, titled "Steel Overhead Garage Door", dated 04/20/95, with last revision G dated 01/02/09, sheets 1 through 5 of 5, prepared by Al-Farooq Corporation, signed and sealed by Javad Ahmad, P.E., bearing the Miami-Dade County Product Control renewal stamp with the Notice of Acceptance number and expiration date by the Miami-Dade County Product Control Section.

MISSILE IMPACT RATING: Large and Small Missile Impact Resistant

LABELING: Each unit shall bear a permanent label with the manufacturer's name or logo, city, state and following statement: "Miami-Dade County Product Control Approved", unless otherwise noted herein.

RENEWAL of this NOA shall be considered after a renewal application has been filed and there has been no change in the applicable building code negatively affecting the performance of this product.

TERMINATION of this NOA will occur after the expiration date or if there has been a revision or change in the materials, use, and/or manufacture of the product or process. Misuse of this NOA as an endorsement of any product, for sales, advertising or any other purposes shall automatically terminate this NOA. Failure to comply with any section of this NOA shall be cause for termination and removal of NOA.

ADVERTISEMENT: The NOA number preceded by the words Miami-Dade County, Florida, and followed by the expiration date may be displayed in advertising literature. If any portion of the NOA is displayed, then it shall be done in its entirety.

INSPECTION: A copy of this entire NOA shall be provided to the user by the manufacturer or its distributors and shall be available for inspection at the job site at the request of the Building Official.

This NOA **renews NOA # 09-0212.10** and consists of this page 1 and evidence pages E-1 and E-2, as well as approval document mentioned above.

The submitted documentation was reviewed by **Carlos M. Utrera, P.E.**

MIAMI-DADE COUNTY APPROVED

02/24/11

NOA No. 11-0107.03
Expiration Date: April 4, 2016
Approval Date: March 17, 2011

NOTICE OF ACCEPTANCE: EVIDENCE SUBMITTED

A. DRAWINGS

1. Drawing No. **95-17**, titled "Steel Overhead Garage Door", dated 04/20/95, with last revision G dated 01/02/09, sheets 1 through 5 of 5, prepared by Al-Farooq Corporation, signed and sealed by Javad Ahmad, P.E.

B. TESTS

1. Test Report on Tensile Test per ASTM E-8 of "Sectional Residential Door (skin)", prepared by Hurricane Engineering & Testing Inc, Report No. **HETI 08-T180,** dated 12/23/08, signed and sealed by Candido F. Font, P.E.
   "Submitted under NOA # 09-0212.10"

2. Test report on Uniform Static Air Pressure Test per FBC, TAS 202 & Forced Entry Resistance Test per SFBC, Section 3603.2 of Series 724 Garage Door, prepared by Hurricane Engineering & Testing Inc., Report No. **HETI-05-1494**, dated 12/16/05, signed and sealed by Rafael E. Droz-Seda, P.E.
3. Test report on Large Missile Impact Test per FBC, TAS 201 and Cyclic Wind Pressure Test per FBC, TAS 203 of Series 724 Garage Door, prepared by Hurricane Engineering & Testing Inc., Report No. **HETI-05-1495**, dated 12/16/05, signed and sealed by Rafael E. Droz-Seda, P.E.
   "Submitted under NOA # 06-0705.09"

4. Test report on Salt Spray (Corrosion) Test per ASTM B 117 of a painted G-40 steel panels, prepared by Celotex Corporation, Test Report No. **258592**, dated 08/17/98, signed by W. A. Jackson, P.E.
   "Submitted under NOA # 03-0210.04"

C. CALCULATIONS *"Submitted under NOA # 09-0212.10"*

1. Anchoring verification calculations prepared by Al-Farooq Corporation, complying with F.B.C 2007, dated 01/21/09, signed and sealed by Humayoun Farooq, P.E.

D. QUALITY ASSURANCE

1. Miami-Dade Building and Neighborhood Compliance Department (BNC)

02/24/11

Carlos M. Utrera, P.E.
Product Control Examiner
NOA No. 11-0107.03
Expiration Date: April 4, 2016
Approval Date: March 17, 2011

NOTICE OF ACCEPTANCE: EVIDENCE SUBMITTED

E. MATERIAL CERTIFICATIONS

1. Notice of Acceptance No. **07-1016.07**, issued to Insulfoam, LLC, for their Insulfoam Expanded Polystyrene Insulation, approved on 11/29/07 and expiring on 11/29/12.
2. Notice of Acceptance No. **07-1107.08**, issued to Dyplast Products, LLC, for their Expanded Polystyrene Block Type Insulation, approved on 04/26/07 and expiring on 08/27/08.
3. Notice of Acceptance No. **07-0301.10**, issued to Dyplast Products, LLC, for their Dyplast ISO-C1 Polyisocyanurate Insulation, approved on 06/07/07 and expiring on 01/11/12.

F. STATEMENTS

1. Statement letter of code conformance with FBC 2007 and no financial interest, issued by Al-Farooq Corporation, dated 09/09/10, signed and sealed by Javad Ahmad, P.E.

02/24/11

Carlos M. Utrera, P.E.
Product Control Examiner
NOA No. 11-0107.03
Expiration Date: April 4, 2016
Approval Date: March 17, 2011

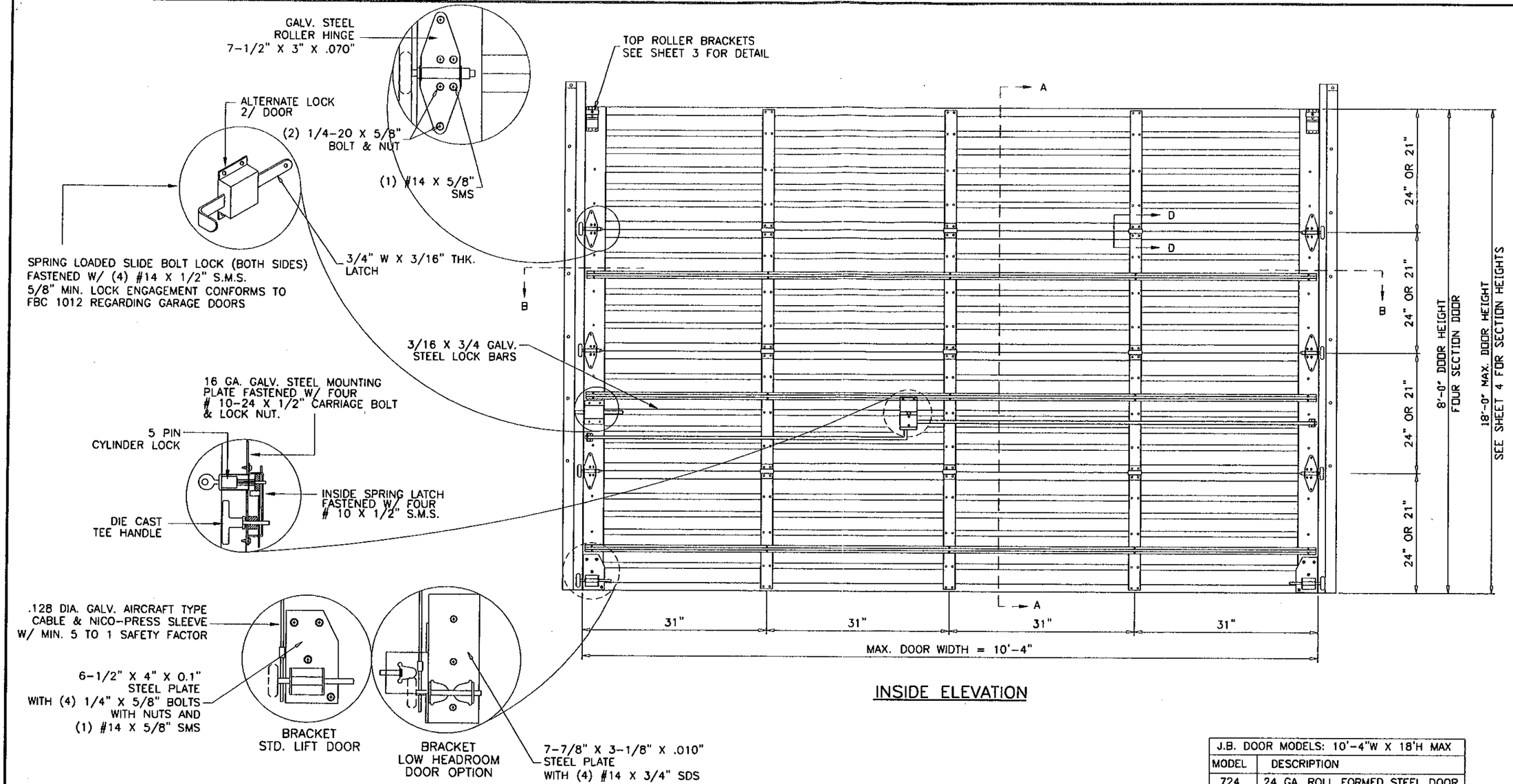

INSIDE ELEVATION

J.B. DOOR MODELS: 10'-4"W X 18'H MAX	
MODEL	DESCRIPTION
724	24 GA. ROLL FORMED STEEL DOOR
720	20 GA. ROLL FORMED STEEL DOOR

NOTE: MODEL 724 TESTED.

THIS PRODUCT IS RATED FOR LARGE MISSILE IMPACT

MAXIMUM DESIGN LOAD RATING = + 60.0 PSF
(FOR SIZES SHOWN OR SMALLER) − 67.0 PSF

GENERAL NOTES

1. THIS PRODUCT HAS BEEN DESIGNED AND TESTED TO COMPLY WITH THE REQUIREMENTS OF THE FLORIDA BUILDING CODE 2007 EDITION INCLUDING HIGH VELOCITY HURRICANE ZONE (HVHZ).
2. ANCHORS SHALL BE AS LISTED, SPACED AS SHOWN ON DETAILS. ANCHOR EMBEDMENT TO BASE MATERIAL SHALL BE BEYOND WALL DRESSING OR STUCCO.
3. ALL BOLTS, NUTS AND WASHERS SHALL BE ZINC PLATED CARBON STEEL.
4. ANCHORING OR LOADING CONDITIONS OTHER THAN THOSE SHOWN IN THESE DETAILS ARE NOT PART OF THIS APPROVAL.

Engr: JAVAD AHMAD
CIVIL
FLA. PE # 70592
C.A.N. 3538

SEP 14 2010

PRODUCT RENEWED
as complying with the Florida Building Code
Acceptance No 11-0107.03
Expiration Date 04/04/2016
By
Miami-Dade Product Control

AL-FAROOQ CORPORATION
ENGINEERS & PRODUCT DEVELOPMENT
1235 S.W. 87 AVE
MIAMI, FLORIDA 33174
TEL (305) 264-8100 FAX. (305) 262-6978

GARAGE\95-17JB

STEEL OVERHEAD GARAGE DOOR

J.B. GARAGE DOORS INC.
12195 N.W. 98 TH. AVE.
HIALEAH GARDENS, FL. 33016
TEL. (305) 558 - 1658

revisions:			
no	date	by	description
C	05.12.05		UPDATED FOR 2004 FBC
D	11.28.05		REV. PER BCCO COMMENTS
E	04.17.06		UPDATED FOR NEW TEST
F	11.02.06		REV. PER BCCO COMMENTS
G	01.02.09		UPDATED FOR 2007 FBC

date: 04-20-95
scale: NONE
dr. by: HAMID
chk. by:

drawing no. 95-17

sheet 1 of 5

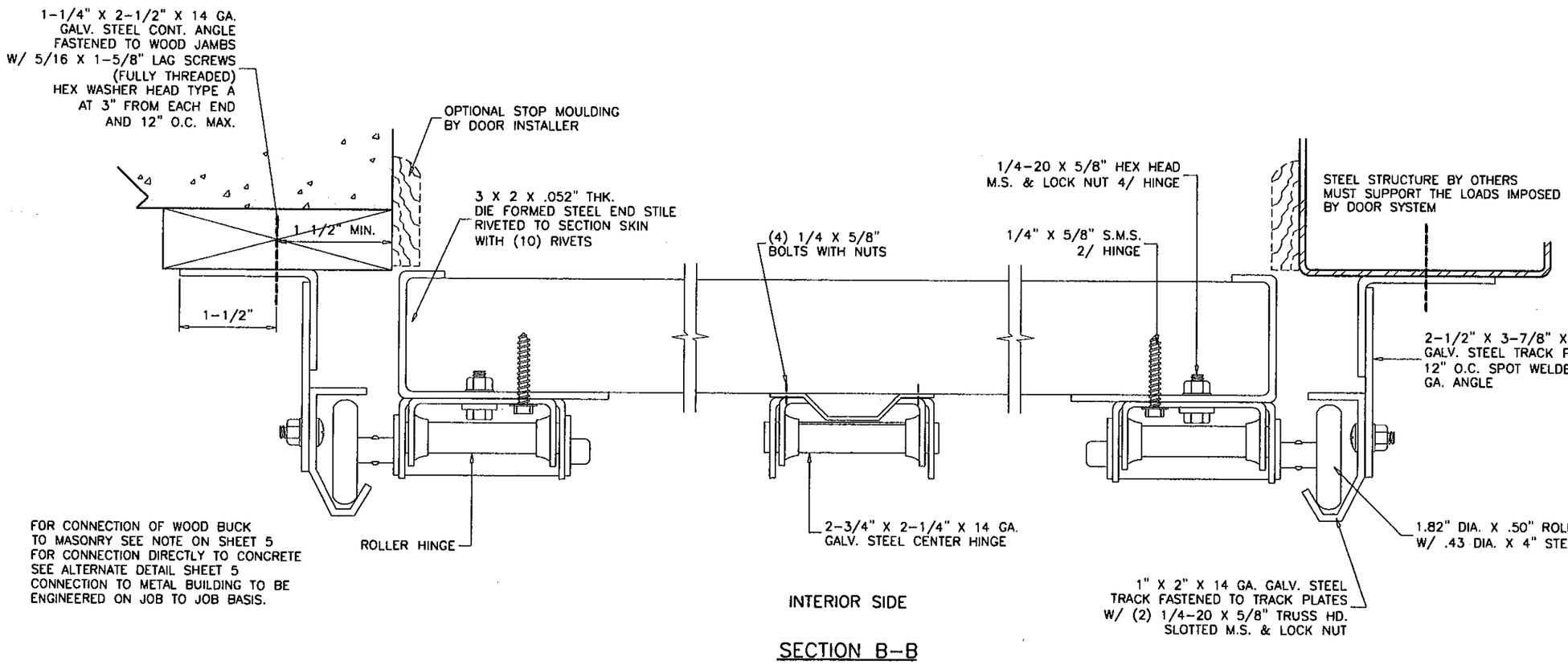

SECTION B-B

Engr: JAVAD AHMAD
CIVIL
FLA. PE # 70592
C.A.N. 3538

SEP 14 2010

PRODUCT RENEWED
as complying with the Florida Building Code
Acceptance No 11-0107.03
Expiration Date 04/04/2016
By
Miami Dade Product Control

AL-FAROOQ CORPORATION
ENGINEERS & PRODUCT DEVELOPMENT
1235 S.W. 87 AVE
MIAMI, FLORIDA 33174
TEL. (305) 264-8100 FAX. (305) 262-6978

GARAGE\ 95-17JB

STEEL OVERHEAD GARAGE DOOR

J.B. GARAGE DOORS INC.
12195 N.W. 98 TH. AVE.
HIALEAH GARDENS, FL. 33016
TEL. (305) 558 - 1658

revisions:

no	date	by	description
C	05.12.05		UPDATED FOR 2004 FBC
D	11.28.05		REV. PER BCCO COMMENTS
E	04.17.06		UPDATED FOR NEW TEST
F	11.02.06		REV. PER BCCO COMMENTS
G	01.02.09		UPDATED FOR 2007 FBC

date: 04-20-95
scale: NONE
dr. by: HAMID
chk. by:

drawing no.
95-17

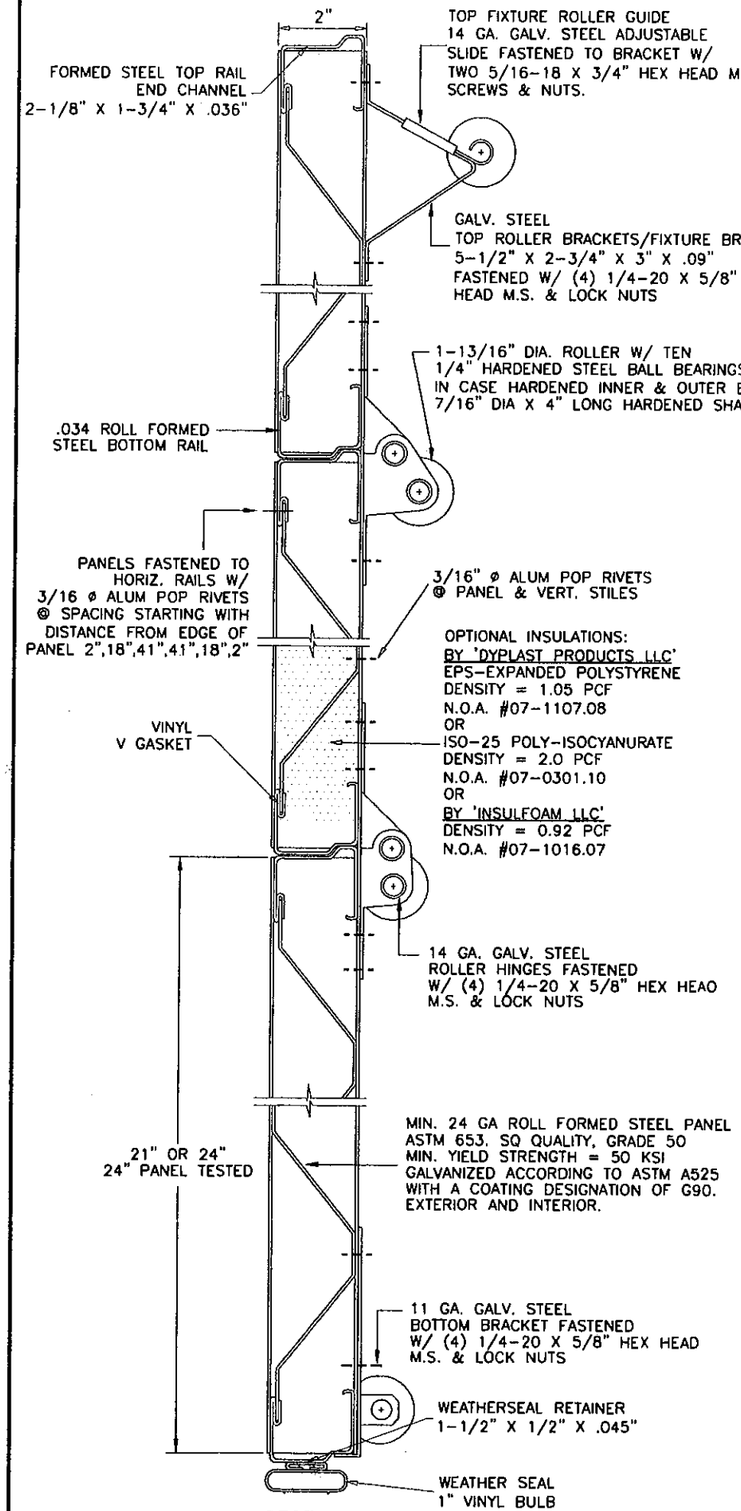

SECTION A-A

SEE SECTIONS AT RIGHT FOR LOCATION OF REINFORCING TRUSSES

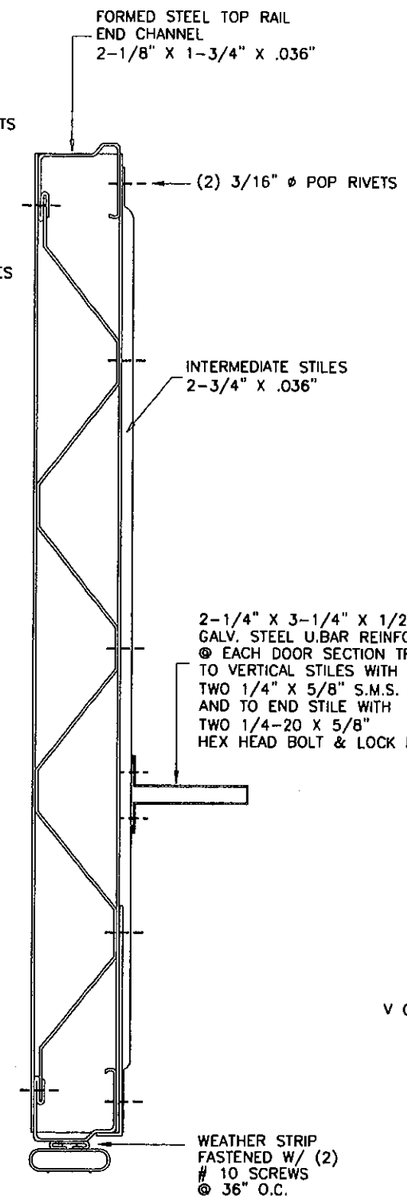

BOTTOM PANEL

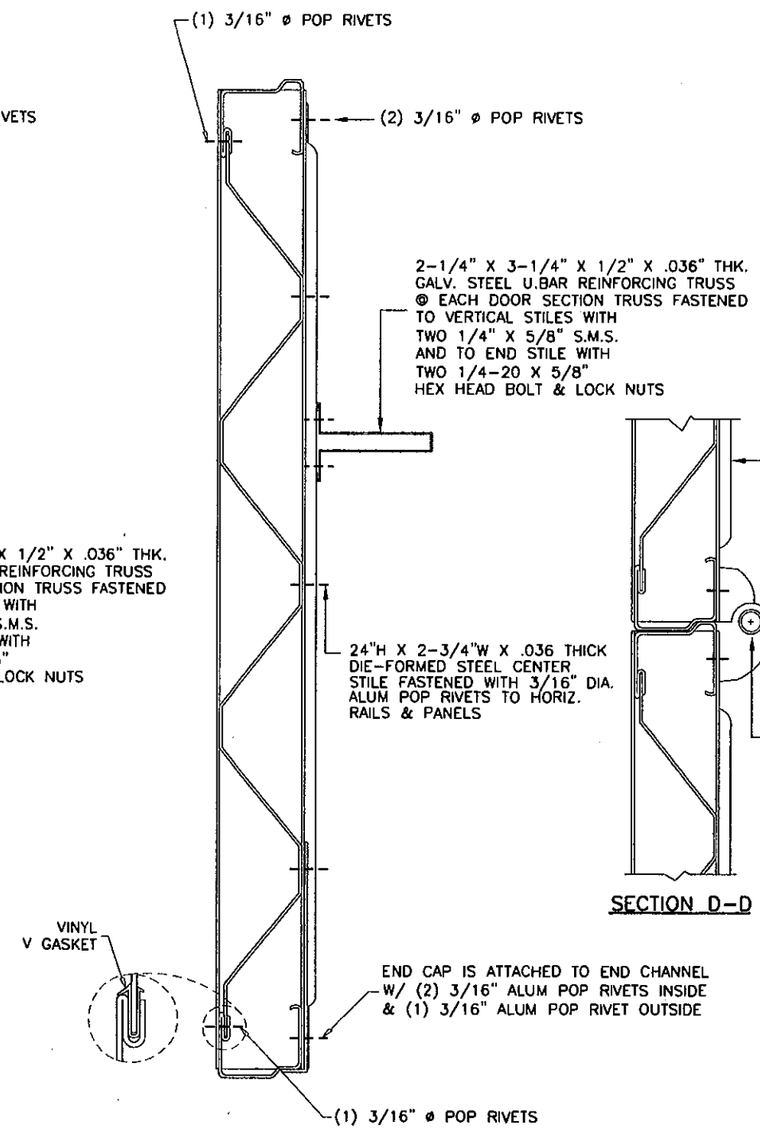

ALL INTERMEDIATE PANELS

TOP PANEL HAS NO REINFORCING TRUSS

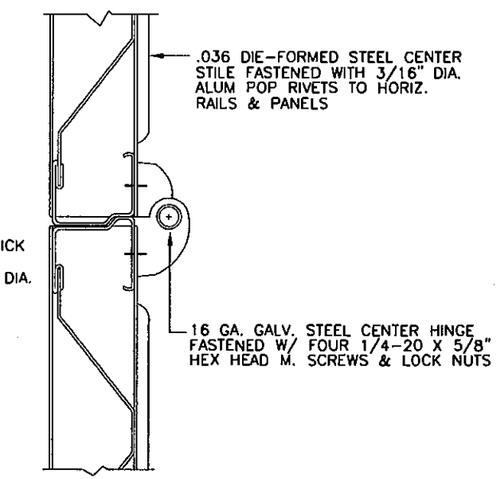

SECTION D-D

Engr: JAVAD AHMAD
CIVIL
FLA. PE # 70592
C.A.N. 3538

SEP 14 2010

PRODUCT RENEWED
as complying with the Florida Building Code
Acceptance No 11-0107.03
Expiration Date 04/04/2016
By
Miami Dade Product Control

AL-FAROOQ CORPORATION
ENGINEERS & PRODUCT DEVELOPMENT
1235 S.W. 87 AVE
MIAMI, FLORIDA 33174
TEL. (305) 264-8100 FAX. (305) 262-6978
GARAGE\95-17JB

STEEL OVERHEAD GARAGE DOOR

J.B. GARAGE DOORS INC.
12195 N.W. 98 TH. AVE.
HIALEAH GARDENS, FL. 33016
TEL. (305) 558 - 1658

revisions:

no	date	by	description
C	05.12.05		NOA NO. REV.
D	11.28.05		NO CHANGE THIS SHEET
E	04.17.06		NO CHANGE THIS SHEET
F	11.02.06		REV. PER BCCO COMMENTS
G	01.02.09		UPDATED FOR 2007 FBC

date: 04-20-95
scale: NONE
dr. by: HAMID
chk. by:

drawing no.
95-17

sheet 3 of 5

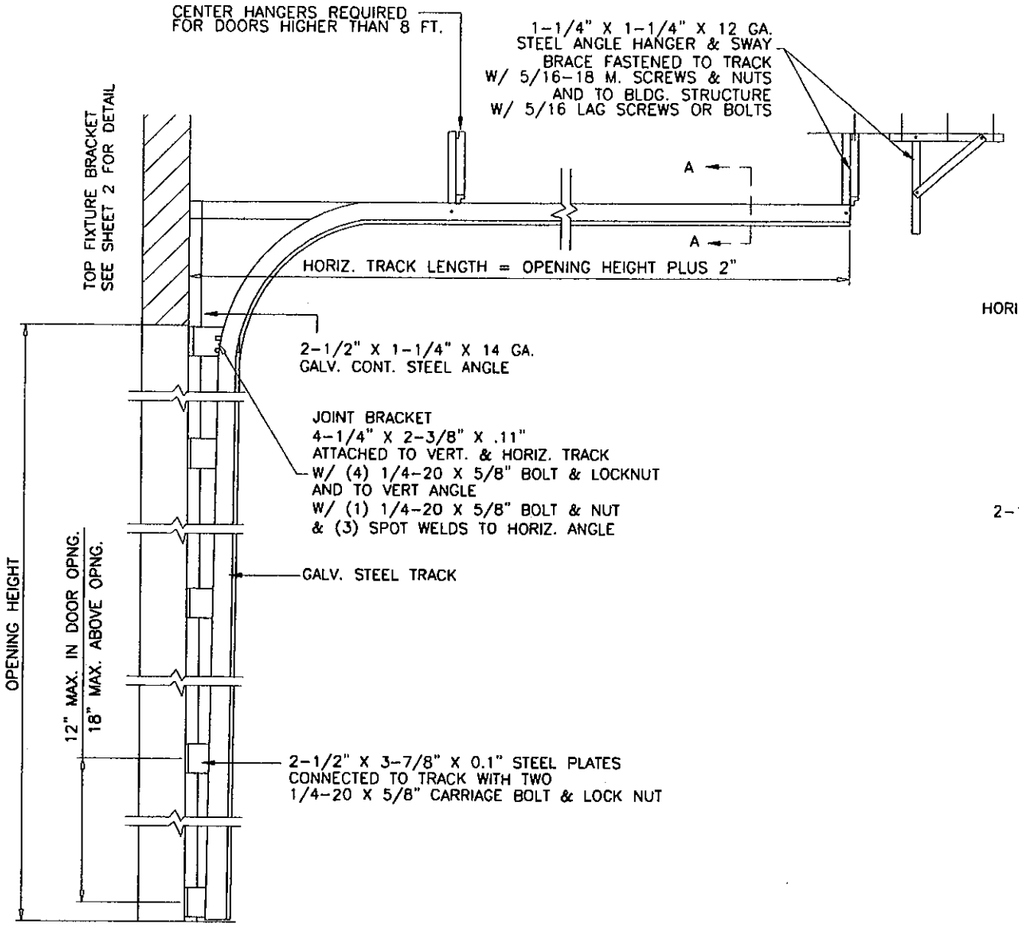

DOOR TRACK AS VIEWED FROM CENTER OF OPENING

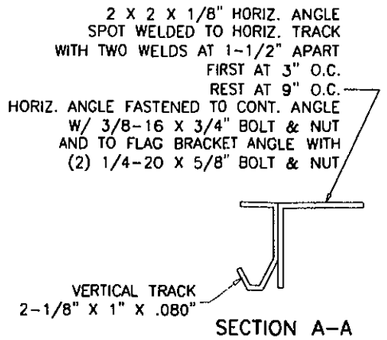

SECTION A-A

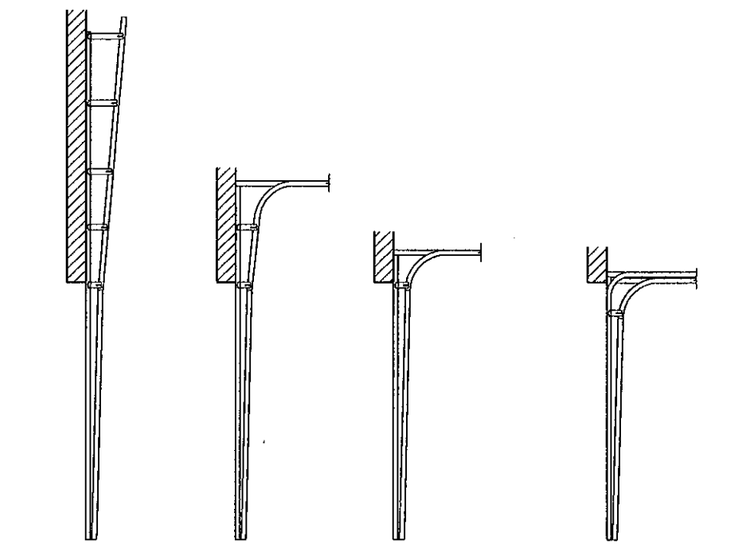

VERTICAL LIFT HIGH LIFT STANDARD LIFT LOW HEADROOM

AVAILABLE TRACK OPTIONS

DOOR HEIGHT	NO. OF TRUSSES	SECTION HEIGHTS *								
		1ST	2ND	3RD	4TH	5TH	6TH	7TH	8TH	9TH
7'-0"	3	21"	21"	21"	21"	N/A	N/A	N/A	N/A	N/A
8'-0"	3	24"	24"	24"	24"	N/A	N/A	N/A	N/A	N/A
9'-0"	4	24"	21"	21"	21"	21"	N/A	N/A	N/A	N/A
10'-0"	4	24"	24"	24"	24"	24"	N/A	N/A	N/A	N/A
11'-0"	5	24"	24"	21"	21"	21"	21"	N/A	N/A	N/A
12'-0"	5	24"	24"	24"	24"	24"	24"	N/A	N/A	N/A
13'-0"	6	24"	24"	24"	21"	21"	21"	21"	N/A	N/A
14'-0"	6	24"	24"	24"	24"	24"	24"	24"	N/A	N/A
15'-0"	7	24"	24"	24"	24"	21"	21"	21"	21"	N/A
16'-0"	7	24"	24"	24"	24"	24"	24"	24"	24"	N/A
17'-0"	8	24"	24"	24"	24"	24"	21"	21"	21"	21"
18'-0"	8	24"	24"	24"	24"	24"	24"	24"	24"	24"

*-SECTIONS ARE NUMBERED STARTING AT THE BOTTOM

Engr: JAVAD AHMAD
CIVIL
FLA. PE # 70592
C.A.N. 3538

SEP 14 2010

PRODUCT RENEWED
as complying with the Florida Building Code
Acceptance No 11-0107.03
Expiration Date 04/04/2016
By
Miami Dade Product Control

AL-FAROOQ CORPORATION
ENGINEERS & PRODUCT DEVELOPMENT
1235 S.W. 87 AVE
MIAMI, FLORIDA 33174
TEL. (305) 264-8100 FAX. (305) 262-6978

GARAGE\95-17JB

STEEL OVERHEAD GARAGE DOOR

J.B. GARAGE DOORS INC.
12195 N.W. 98 TH. AVE.
HIALEAH GARDENS, FL. 33016
TEL. (305) 558 - 1658

revisions:

no	date	by	description
C	05.12.05		ANCHOR SPACING REV.
D	11.28.05		REV. PER BCCO COMMENTS
E	04.17.06		NO CHANGE THIS SHEET
F	11.02.06		REV. PER BCCO COMMENTS
G	01.02.09		UPDATED FOR 2007 FBC

date: 04-20-95
scale: NONE
dr. by: HAMID
chk. by:

drawing no. 95-17

sheet 4 of 5

ANCHOR SPACING				
ANCHORS	STRUCTURE	EMBED	SPACING	EDGE DIST.
3/8" HLC SLEEVE BY 'HILTI'	CONC.	1-1/4"	8-1/2"	2-1/2"
3/8" HLC SLEEVE BY 'HILTI'	FILLED BLOCK	1-1/4"	8-1/2"	4"
3/8" DYNABOLT BY 'ITW'	CONC.	1-1/2"	8-1/2"	2-1/2"
1/2" DYNABOLT BY 'ITW'	FILLED BLOCK	1-7/8"	8-1/2"	4"
3/8" POWER-BOLT BY 'POWERS'	CONC.	2"	8-1/2"	1-7/8"
3/8" SLEEVE-ALL BY 'SIMPSONS'	CONC.	1-1/2"	8-1/2"	2-1/2"

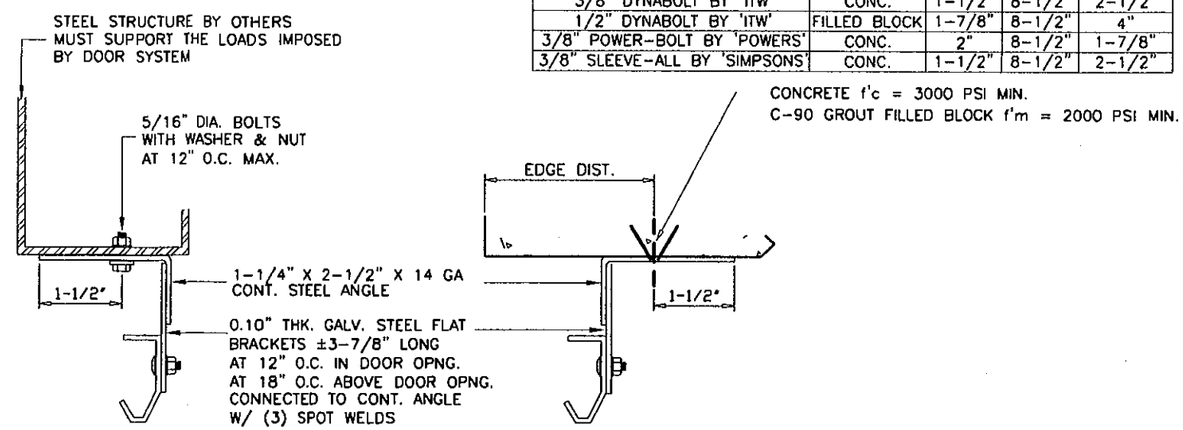

TRACK INSTALLATION

WOOD FRAME BUILDINGS

STUD WALLS OR DOOR OPENING (NOT BY J.B. DOORS) SHALL BE FRAMED SOLID BY NOT LESS THAN (3) 2X6 PRESSURE TREATED GRADE 2 SYP OR BETTER WOOD STUDS.
STUD WALLS TO BE CONT. FROM FOOTING TO TIE BEAM. ENGINEER OF RECORD TO VERIFY ADEQUACY OF THE SUPPORTING STRUCTURE.

WOOD BUCK CONNECTION TO MASONRY

TRACK SHALL BE SECURED WITH CONT. STEEL ANGLE TO PRESSURE TREATED 2X6 SYP WOOD JAMBS WHICH SHALL BE ANCHORED TO GROUTED REINFORCED MASONRY BLOCK WALL OR CONC. COLUMN WITH

1/4" ULTRACON BY 'ELCO' WITH SPACING OF
12" O.C. INTO BLOCK WALL, WITH 2-1/4" MIN. EMBED
11" O.C. INTO 3000 PSI CONCRETE, WITH 1-3/4" MIN. EMBED
2-1/2" MIN. EDGE DISTANCE

1/4" TAPPER BY 'POWERS' WITH SPACING OF
7" O.C. INTO BLOCK WALL, WITH 1-1/2" MIN. EMBED
8" O.C. INTO 3000 PSI CONCRETE, WITH 1-3/4" MIN. EMBED
3" MIN. EDGE DISTANCE

3/8" CONFLEX BY 'ELCO' OR
3/8" LDT BY 'ITW' WITH SPACING OF
18" O.C. INTO 3000 PSI CONCRETE, WITH 2-1/2" MIN. EMBED
3" MIN. EDGE DISTANCE

3/8" HLC SLEEVE BY 'HILTI' WITH SPACING OF
11" O.C. INTO 3000 PSI CONCRETE, WITH 1-1/4" MIN. EMBED AND
2-1/2" MIN. EDGE DISTANCE

THE BLOCK WALL CELLS SHALL BE GROUT FILLED AND REINFORCED WITH FOUR # 5 BARS EXTENDING INTO FOOTING AND INTO TIE BEAMS ALL BARS SHALL BE CONTINUOUS FROM TIE BEAMS TO FOOTING.

PREPARATION OF JAMBS BY OTHERS

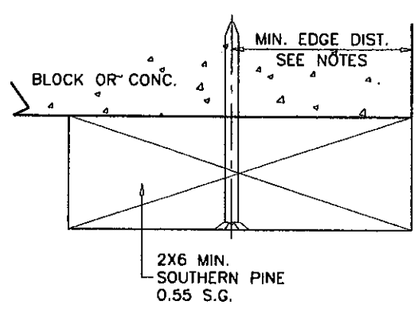

Engr: JAVAD AHMAD
CIVIL
FLA. PE # 70592
C.A.N. 3538

SEP 14 2010

PRODUCT RENEWED
as complying with the Florida Building Code
Acceptance No 11-0107.03
Expiration Date 09/04/2016
By
Miami Dade Product Control

AL-FAROOQ CORPORATION
ENGINEERS & PRODUCT DEVELOPMENT
1235 S.W. 87 AVE
MIAMI, FLORIDA 33174
TEL. (305) 264-8100 FAX. (305) 262-6978

GARAGE\95-17JB

STEEL OVERHEAD GARAGE DOOR

J.B. GARAGE DOORS INC.
12195 N.W. 98 TH. AVE.
HIALEAH GARDENS, FL. 33016
TEL. (305) 558 - 1658

revisions:

no	date	by	description
C	05.12.05		ANCHOR SPACING REV.
D	11.28.05		REV. PER BCCO COMMENTS
E	04.17.06		NO CHANGE THIS SHEET
F	11.02.06		REV. PER BCCO COMMENTS
G	01.02.09		UPDATED FOR 2007 FBC

date: 04-20-95
scale: NONE
dr. by: HAMID
chk. by:

drawing no. 95-17

sheet 5 of 5