MIAMI-DADE COUNTY
BUILDING AND NEIGHBORHOOD COMPLIANCE DEPARTMENT (BNC)
BOARD AND CODE ADMINISTRATION DIVISION

MIAMI-DADE COUNTY
PRODUCT CONTROL SECTION
11805 SW 26 Street, Room 208
Miami, Florida 33175-2474
T (786) 315-2590 F (786) 315-2599
www.miamidade.gov/building

NOTICE OF ACCEPTANCE (NOA)

SLAS INC.
13690 SW 142nd Avenue #28
Miami, Florida 33186

SCOPE:
This NOA is being issued under the applicable rules and regulations governing the use of construction materials. The documentation submitted has been reviewed and accepted by Miami-Dade County BNC-Product Control Section to be used in Miami Dade County and other areas where allowed by the Authority Having Jurisdiction (AHJ).

This NOA shall not be valid after the expiration date stated below. The Miami-Dade County Product Control Section (In Miami Dade County) and/or the AHJ (in areas other than Miami Dade County) reserve the right to have this product or material tested for quality assurance purposes. If this product or material fails to perform in the accepted manner, the manufacturer will incur the expense of such testing and the AHJ may immediately revoke, modify, or suspend the use of such product or material within their jurisdiction. BNC reserves the right to revoke this acceptance, if it is determined by Miami-Dade County Product Control Section that this product or material fails to meet the requirements of the applicable building code.

This product is approved as described herein, and has been designed to comply with the High Velocity Hurricane Zone of the Florida Building Code.

DESCRIPTION: " Delta-301 " Aluminum Accordion Shutter System

APPROVAL DOCUMENT: Drawing No. 10-07, titled "Delta-301 Aluminum Accordion Shutter ", sheets 1 through 11 of 11, prepared by Al-Farooq Corporation, dated December 06, 2010, signed and sealed by Javad Ahmad, P.E., on September 07, 2011, bearing the Miami-Dade County Product Control Approval stamp with the Notice of Acceptance number and the approval date by the Miami-Dade County Product Control Section.

MISSILE IMPACT RATING: Large and Small Missile Impact Resistant

LABELING: Each unit shall bear a permanent label with the manufacturer's name or logo, city, state, the following statement: "Miami-Dade County Product Control Approved", and NOA number, per TAS-201, TAS-202, and TAS-203, unless otherwise noted herein.

RENEWAL of this NOA shall be considered after a renewal application has been filed and there has been no change in the applicable building code negatively affecting the performance of this product.

TERMINATION of this NOA will occur after the expiration date or if there has been a revision or change in the materials, use, and/or manufacture of the product or process. Misuse of this NOA as an endorsement of any product, for sales, advertising or any other purposes shall automatically terminate this NOA. Failure to comply with any section of this NOA shall be cause for termination and removal of NOA.

ADVERTISEMENT: The NOA number preceded by the words Miami-Dade County, Florida, and followed by the expiration date may be displayed in advertising literature. If any portion of the NOA is displayed, then it shall be done in its entirety.

INSPECTION: A copy of this entire NOA shall be provided to the user by the manufacturer or its distributors and shall be available for inspection at the job site at the request of the Building Official.

This NOA consists of this page 1, evidence submitted page E-1 as well as approval document mentioned above. The submitted documentation was reviewed by **Helmy A. Makar, P.E., M.S.**

MIAMI-DADE COUNTY APPROVED

Helmy A. Makar
09/15/2011

NOA No. 11-0112.01
Expiration Date: 09/15/2016
Approval Date: 09/15/2011

NOTICE OF ACCEPTANCE: EVIDENCE SUBMITTED

A. DRAWINGS

1. *Drawing No. 10-07, titled "Delta-301 Aluminum Accordion Shutter ", sheets 1 through 11 of 11, prepared by Al-Farooq Corporation, dated December 06, 2010, signed and sealed by Javad Ahmad, P.E., on September 07, 2011.*

B. TESTS

1. *See Association's generic approval under 10-1211.*

C. CALCULATIONS

1. *See Association's generic approval under 10-1211.*

D. QUALITY ASSURANCE

1. *By Miami-Dade County Building and Neighborhood Compliance Department (BNC).*

E. MATERIAL CERTIFICATIONS

1. *See Association's generic approval under 10-1211.*

F. STATEMENTS

1. *Release letter issued by the Delta Shutter Group & Associates, Inc., dated September 07, 2011, certifying this product to meet the criteria of product tested and approved, and allowing SLAS INC. to use the test results approved under Miami-Dade County Approval No. 10-1211, signed by Ms. Gabriela Gonzalez.*
2. *Acknowledgment letter by SLAS INC. dated September 07, 2011, signed by Ms. Gabriela Gonzalez.*
3. *Letter by Al-Farooq Corporation, dated January 07, 2011, certifying that the drawing (No. 10-07) prepared for SLAS INC., signed and sealed by Javad Ahmad, P.E., is engineering wise identical to Delta Shutter's generic drawing (No. 10-05).*

Helmy A. Makar, P.E., M.S.
BNC, Product Control Unit Supervisor
NOA No. 11-0112.01
Expiration Date: 09/15/2016
Approval Date: 09/15/2011

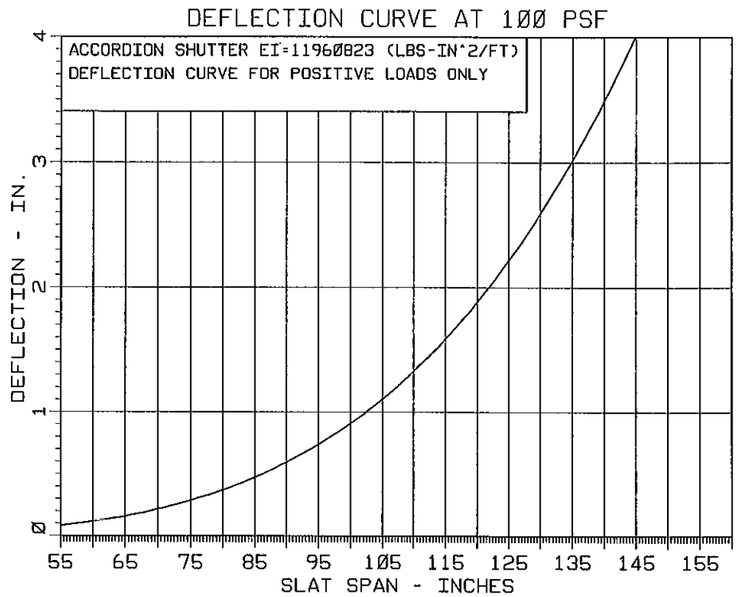

MINIMUM SEPARATION FROM GLASS			
SEPARATION REQD. DUE TO WIND LOAD USE CHART ABOVE		SEPARATION REQD. DUE TO LARGE MISSILE IMPACT	
SHUTTER SPAN = H =	IN.	FOR SLAT SPANS UPTO	SEPARATION
DESIGN LOAD = Pd =	PSF	96"	2-3/4"
FACTOR = K = Pd/100 =	IN.	120"	3-1/4" *
READING FROM SPAN D. CURVE = D =	IN.	160"	4-3/8"
DEFLECTION AT Pd = K*D =	IN.		
MIN. SEPARATION REQD. = K*D+1" =	IN.		

FOR INSTALLATIONS UPTO 30' OF GRADE USE MAXIMUM OF WIND LOAD OR IMPACT LOAD REQUIREMENTS SHOWN ABOVE

FOR INSTALLATIONS ABOVE 30' OF GRADE IGNORE LARGE MISSILE IMPACT REQUIREMENT.

NOTE: NO PART OF SHUTTER SHALL BE UNDER 30' ABOVE GRADE TO WAIVE LARGE MISSILE IMPACT REQUIREMENT.

* LIMIT GLASS SEPARATION TO 3-1/2" WHEN CEILING HEADERS WITH BUILT OUT ANGLES ARE USED IN COMBINATION WITH SILL TRACK WITH ADAPTER.

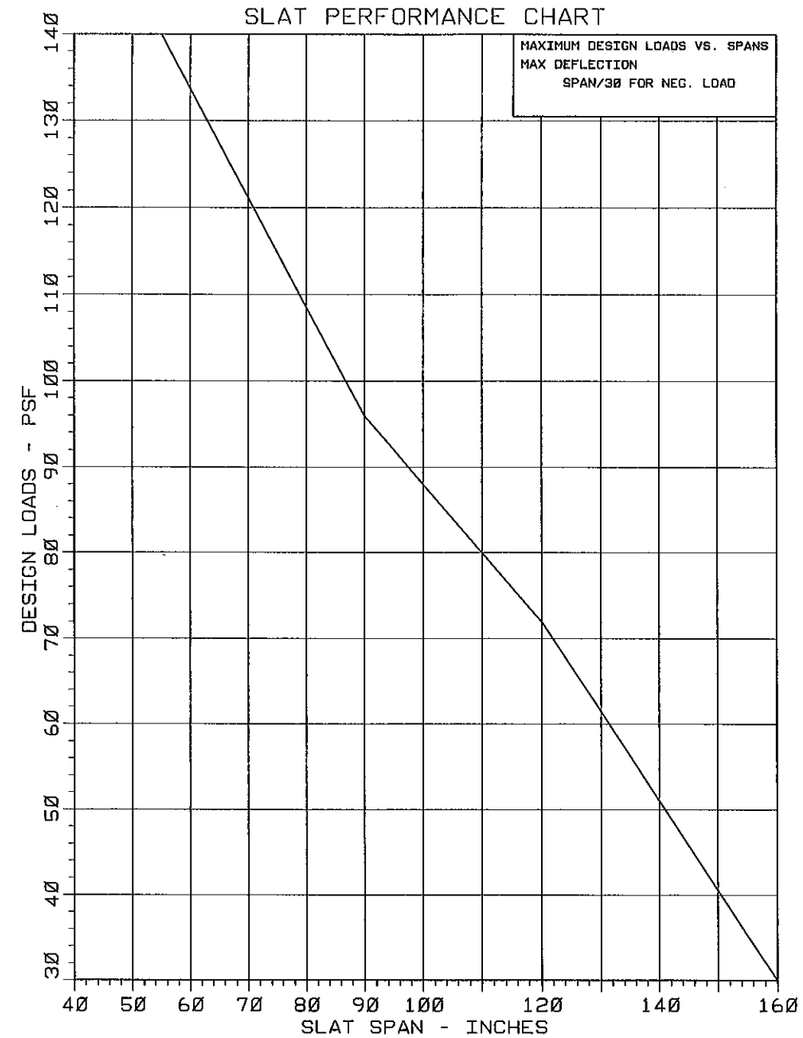

USE SLAT PERFORMANCE CHART TO VERIFY SLAT CAPACITY FOR THE REQUIRED DESIGN LOAD FOR THE PARTICULAR LOCATION.

DESIGN LOADS SHALL BE CALCULATED AS PER REQUIREMENTS OF ASCE 7-05.

GENERAL NOTES

1. THIS PRODUCT HAS BEEN DESIGNED AND TESTED TO COMPLY WITH THE REQUIREMENTS OF THE FLORIDA BUILDING CODE 2007 EDITION INCLUDING HIGH VELOCITY HURRICANE ZONE (HVHZ).
2. DESIGN CRITERIA FOR ALUMINUM, MINIMUM MECHANICAL PROPERTIES, AND SAFETY FACTORS ARE IN ACCORDANCE WITH THE "ALUMINUM CONSTRUCTION MANUAL" LATEST EDITION.
3. ALUMINUM ALLOYS: ALL EXTRUSIONS SHALL BE ALLOY AS SHOWN WITH MIN. YIELD STRESS Fy = 32081 PSI
4. STEEL SURFACES TO BE PLACED IN CONTACT WITH ALUMINUM SHALL BE GIVEN ONE COAT OF ZINC CHROMATE PRIMER IN ACCORDANCE WITH FEDERAL SPEC. NO. TTP-645, OR BE GALVANIZED.
5. ANCHORS SHALL BE AS SHOWN ON DETAILS. ANCHOR EMBEDMENT TO BASE MATERIAL SHALL BE BEYOND WALL DRESSING OR STUCCO.
6. ALL BOLTS SHALL BE STAINLESS STEEL, ALUMINUM ALLOY 2024-T4 OR 7075-T6, OR PLATED STEEL. WING NUTS TO BE OF ZINC ALLOY.
7. DESIGN CRITERIA FOR SLATS: MAX DEFLECTION $\leq$ THE LESSER OF L/30 OR 2".
8. ANCHORING OR LOADING CONDITIONS OTHER THAN THOSE SHOWN IN THESE DETAILS ARE NOT PART OF THIS APPROVAL.
9. A LOAD DURATION INCREASE IS USED IN DESIGN OF ANCHORS INTO WOOD ONLY.

PRODUCT MARKING

A LABEL SHALL BE AFFIXED ON LOCKING MEMBER OF UNIT ABOVE LOCK WITH THE FOLLOWING STATEMENT.

SLAS INC.

'MIAMI-DADE COUNTY PRODUCT CONTROL APPROVED'

FOR INSTALLATION DETAILS SEE SHEETS 3 THRU 6.

Engr: JAVAD AHMAD
CIVIL
FLA. PE # 70592
C.A.N. 3538

SEP 07 2011

Approved as complying with the Florida Building Code
Date 09/15/2011
NOA# 11-0112.01
Miami Dade Product Control
By

AL-FAROOQ CORPORATION
ENGINEERS & PRODUCT DEVELOPMENT
1235 S.W. 87 AVE
MIAMI, FLORIDA 33174
TEL. (305) 264-8100 FAX. (305) 262-6978

ACCORDION/10-07SOSF

DELTA-301 ALUMINUM ACCORDION SHUTTER

SLAS INC.
13690 S.W. 142 AVE. #28
MIAMI, FL. 33186
TEL(305) 225-1393 FAX(305) 225-1322

revisions:

no	date	by	description

date: 12-06-10
scale: 1/2" = 1"
dr. by: HAMID
chk. by:

drawing no. 10-07

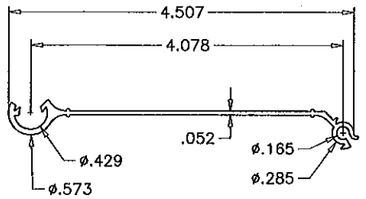

SLAT
6063–T6

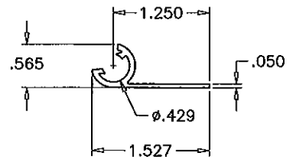

FEMALE END SLAT
6063–T6

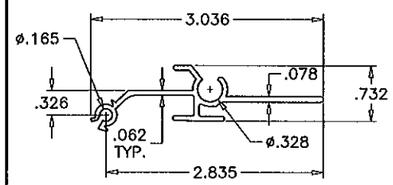

SLANTED LOCKING SLAT
6063–T6

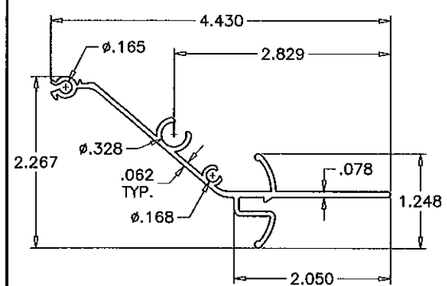

LOCKING SLAT LH
6063–T6

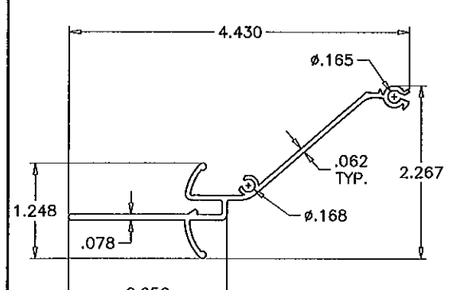

LOCKING SLAT RH
6063–T6

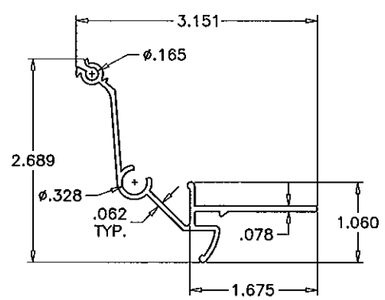

CORNER LOCKING SLAT LH
6063–T6

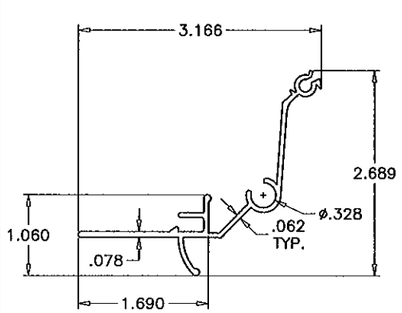

CORNER LOCKING SLAT RH
6063–T6

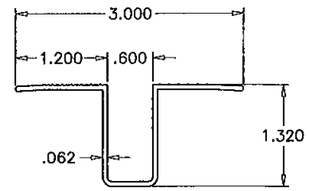

EMBEDDED TRACK
6063–T6

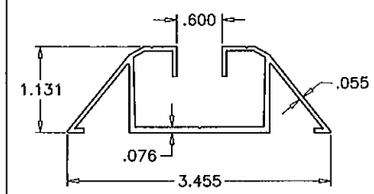

THRESHOLD TRACK
6063–T6

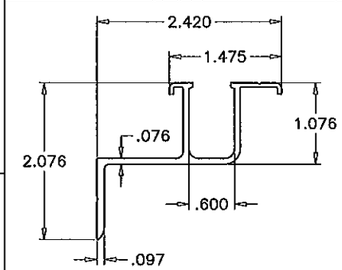

WALL SILL
6063–T6

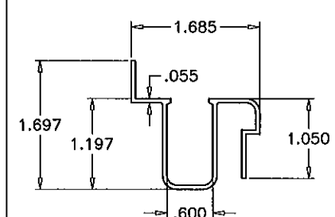

BOTTOM SILL TRACK
6063–T6

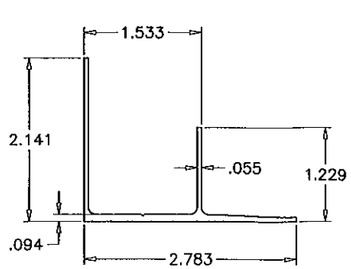

BOTTOM TRACK ADAPTER
6063–T6

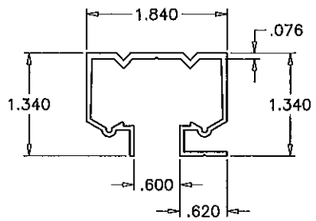

CEILING HEADER
6063–T6

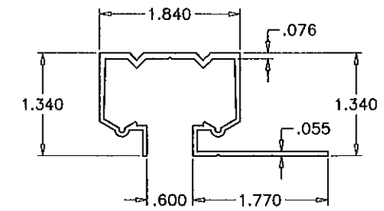

ALT. CEILING HEADER
6063–T6

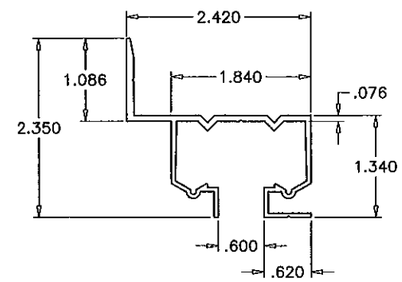

1" BUILT–OUT WALL HEADER
6063–T6

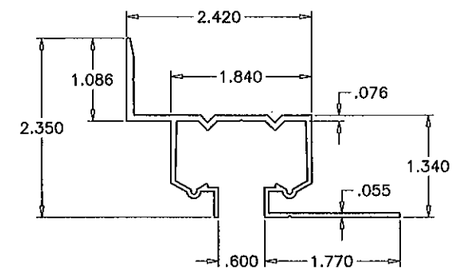

ALT. 1" BUILT–OUT WALL HEADER
6063–T6

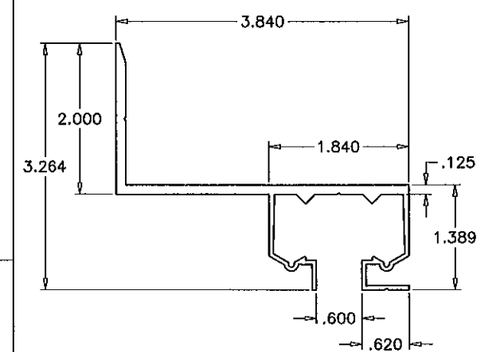

2" BUILT–OUT WALL HEADER
6063–T6

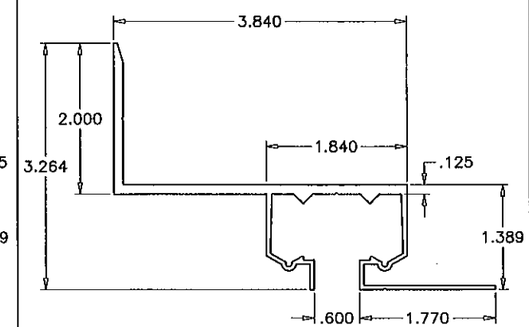

ALT. 2" BUILT–OUT WALL HEADER
6063–T6

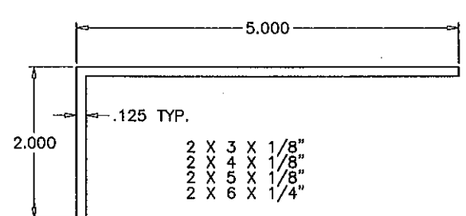

BUILT–OUT ANGLES
6063–T6

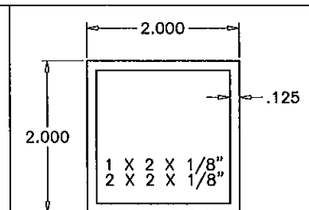

BUILT–OUT TUBES
6063–T6

Approved as complying with the
Florida Building Code
Date 09/15/2011
NOA# 11-0112.01
Miami Dade Product Control
By

Engr: JAVAD AHMAD
CIVIL
FLA. PE. # 70592
C.A.N. 3538

SEP 07 2011

AL-FAROOQ CORPORATION
ENGINEERS & PRODUCT DEVELOPMENT
1235 S.W. 87 AVE
MIAMI, FLORIDA 33174
TEL. (305) 264-8100 FAX. (305) 262-6978

ACCORDION/10–07SOSF

DELTA–301 ALUMINUM ACCORDION SHUTTER

SLAS INC.
13690 S.W. 142 AVE. #28
MIAMI, FL. 33186
TEL(305) 225-1393 FAX(305) 225-1322

revisions:

no.	date	by	description

date: 12-06-10
scale: 1/2" = 1"
dr. by: HAMID
chk. by:

drawing no.
10–07

sheet 2 of 11

WALL MOUNTS

ANCHOR TYPE	CHART TO USE			
	CONC.	BLOCK	WOOD	METAL
A	5	1	–	–
B	6	2	–	–
C	4	1	–	–
D	–	–	5	–
E	–	–	–	3

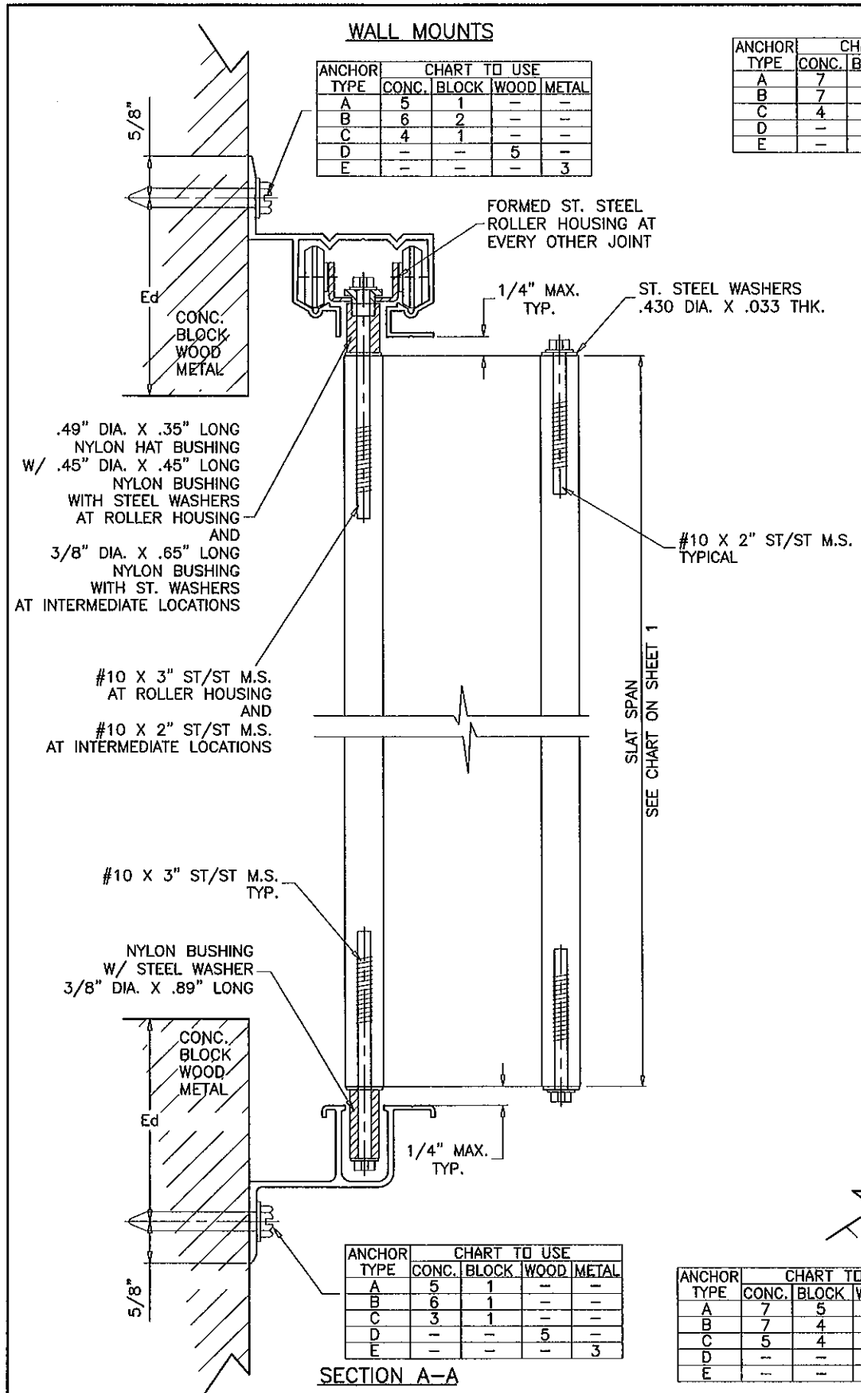

ANCHOR TYPE	CHART TO USE			
	CONC.	BLOCK	WOOD	METAL
A	5	1	–	–
B	6	1	–	–
C	3	1	–	–
D	–	–	5	–
E	–	–	–	3

SECTION A–A

INSIDE MOUNTS

ANCHOR TYPE	CHART TO USE			
	CONC.	BLOCK	WOOD	METAL
A	7	4	–	–
B	7	3	–	–
C	4	3	–	–
D	–	–	4	–
E	–	–	–	4

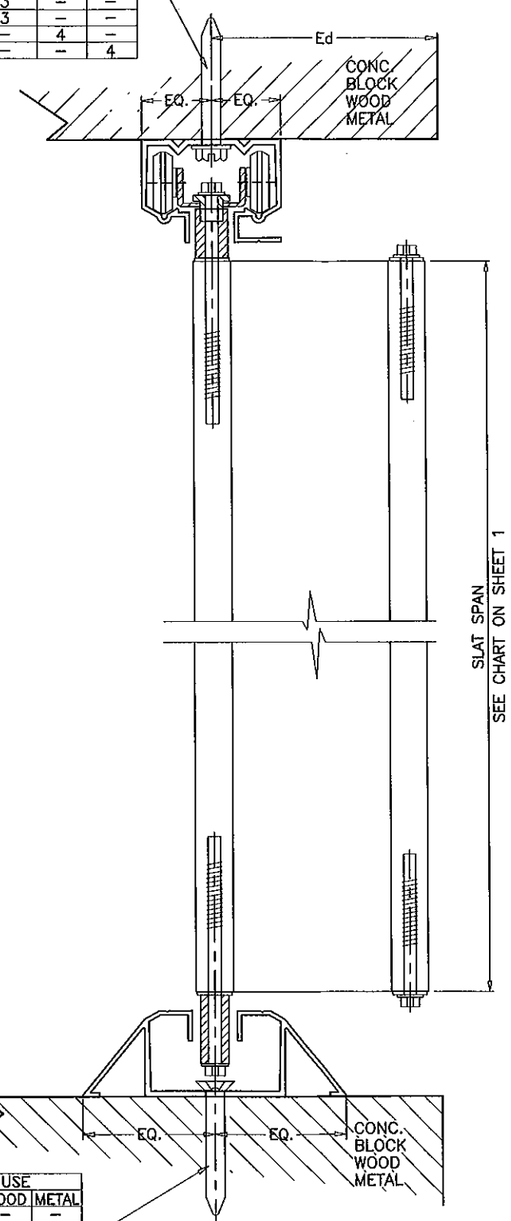

ANCHOR TYPE	CHART TO USE			
	CONC.	BLOCK	WOOD	METAL
A	7	5	–	–
B	7	4	–	–
C	5	4	–	–
D	–	–	5	–
E	–	–	–	6

SECTION B–B

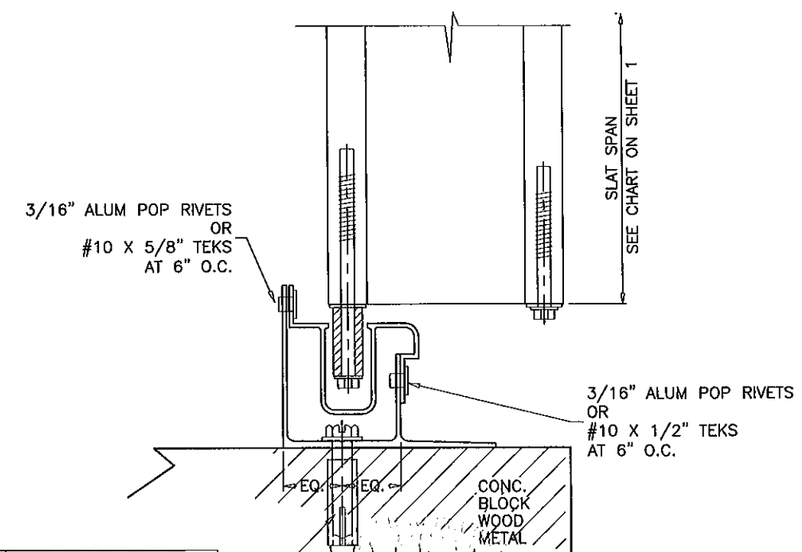

ANCHOR TYPE	CHART TO USE			
	CONC.	BLOCK	WOOD	METAL
A	5	2	–	–
B	5	2	–	–
C	3	2	–	–
D	–	–	4	–
E	–	–	–	3

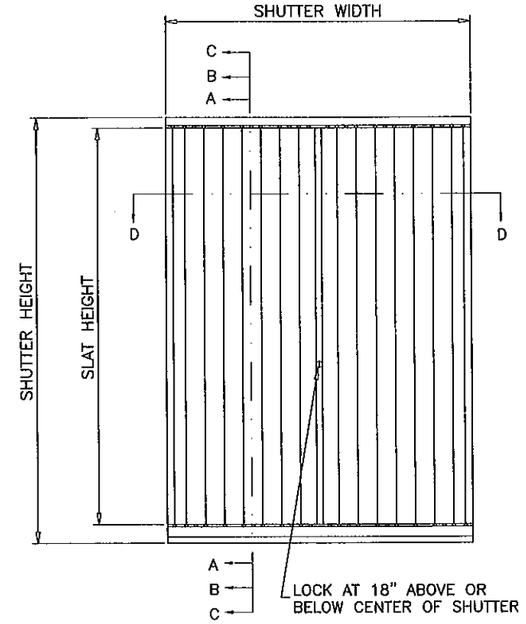

TYPICAL ELEVATION

Engr: JAVAD AHMAD
CIVIL
FLA. PE # 70592
C.A.N. 3538
SEP 07 2011

Approved as complying with the Florida Building Code
Date 09/15/2011
NOA# 11-0112.01
Miami Dade Product Control
By

FOR GENERAL NOTES AND EXTRUSION DETAILS SEE SHEETS 1 & 2.
FOR WOOD INSTALLATIONS SEE SHEET 8.

Ed = TYPICAL EDGE DISTANCE
CONC. & BLOCK = 10d (10 ANCHOR DIAMETERS)
WOOD = 4d
FOR LESSER EDGE DISTANCES SEE SHEET 9.

HEADER AND SILL DETAILS CAN BE USED IN ANY COMBINATIONS.

AL-FAROOQ CORPORATION
ENGINEERS & PRODUCT DEVELOPMENT
1235 S.W. 87 AVE
MIAMI, FLORIDA 33174
TEL. (305) 264-8100 FAX. (305) 262-6978

ACCORDION/10-07SOSF

DELTA-301 ALUMINUM ACCORDION SHUTTER

SLAS INC.
13690 S.W. 142 AVE. #28
MIAMI, FL. 33186
TEL(305) 225-1393 FAX(305) 225-1322

revisions:

no	date	by	description

date: 12-06-10
scale: 1/2" = 1"
dr. by: HAMID
chk. by:

drawing no. 10-07

BUILT-OUT CONDITION

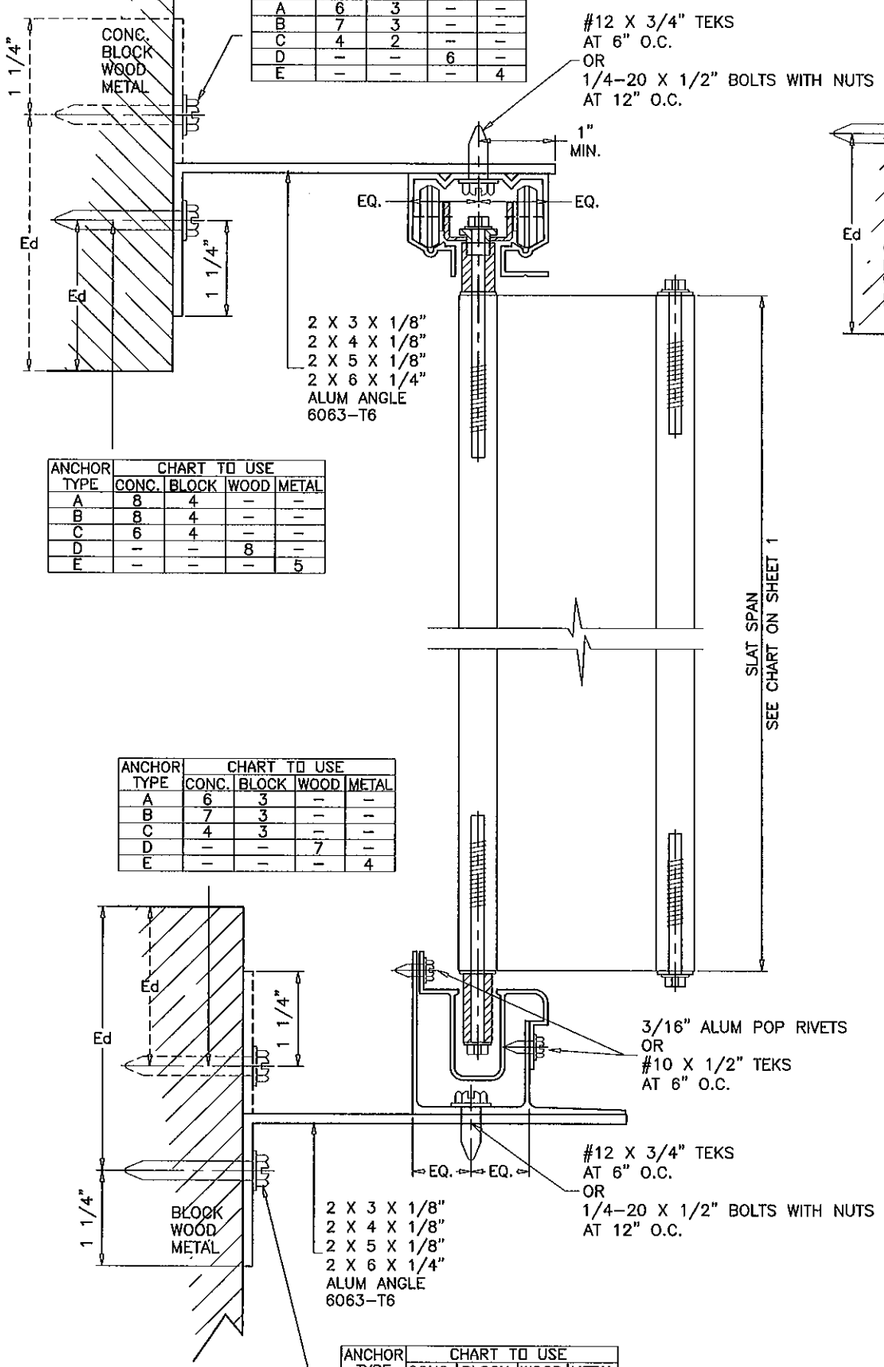

ANCHOR TYPE	CHART TO USE			
	CONC.	BLOCK	WOOD	METAL
A	6	3	–	–
B	7	3	–	–
C	4	2	–	–
D	–	–	6	–
E	–	–	–	4

ANCHOR TYPE	CHART TO USE			
	CONC.	BLOCK	WOOD	METAL
A	8	4	–	–
B	8	4	–	–
C	6	4	–	–
D	–	–	8	–
E	–	–	–	5

ANCHOR TYPE	CHART TO USE			
	CONC.	BLOCK	WOOD	METAL
A	6	3	–	–
B	7	3	–	–
C	4	3	–	–
D	–	–	7	–
E	–	–	–	4

ANCHOR TYPE	CHART TO USE			
	CONC.	BLOCK	WOOD	METAL
A	5	2	–	–
B	6	2	–	–
C	4	1	–	–
D	–	–	6	–
E	–	–	–	3

SECTION C-C

BUILT-OUT HEADER

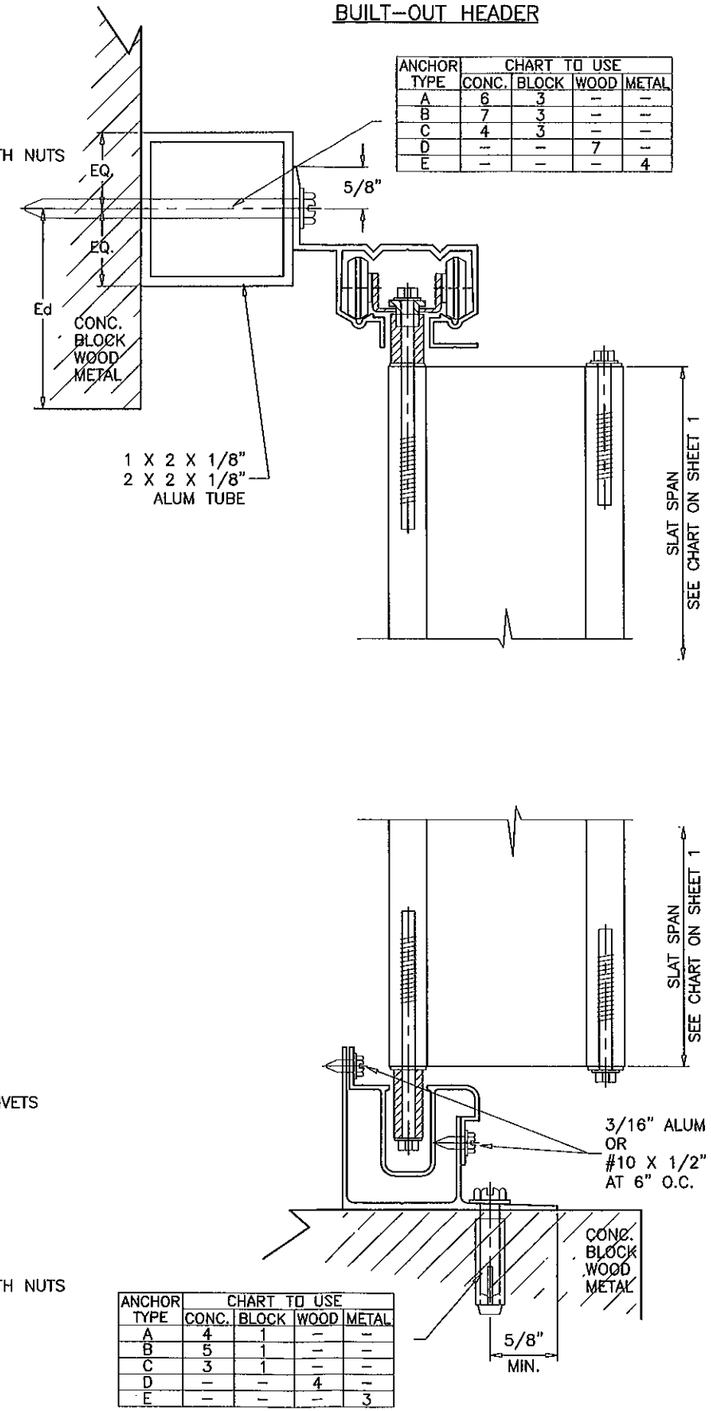

ANCHOR TYPE	CHART TO USE			
	CONC.	BLOCK	WOOD	METAL
A	6	3	–	–
B	7	3	–	–
C	4	3	–	–
D	–	–	7	–
E	–	–	–	4

ANCHOR TYPE	CHART TO USE			
	CONC.	BLOCK	WOOD	METAL
A	4	1	–	–
B	5	1	–	–
C	3	1	–	–
D	–	–	4	–
E	–	–	–	3

ADJUSTABLE SILL

HEADER AND SILL DETAILS CAN BE USED IN ANY COMBINATIONS.

Approved as complying with the Florida Building Code
Date 09/15/2011
NOA# 11-0112.01
Miami Dade Product Control
By

Engr: JAVAD AHMAD
CIVIL
FLA. PE # 70592
C.A.N. 3538
SEP 07 201

AL-FAROOQ CORPORATION
ENGINEERS & PRODUCT DEVELOPMENT
1235 S.W. 87 AVE
MIAMI, FLORIDA 33174
TEL. (305) 264-8100 FAX. (305) 262-6978

ACCORDION/10-07SOSF

DELTA-301 ALUMINUM ACCORDION SHUTTER

SLAS INC.
13690 S.W. 142 AVE. #28
MIAMI, FL. 33186
TEL(305) 225-1393 FAX(305) 225-1322

revisions:		
no	date	by description

date: 12-06-10
scale: 1/2" = 1"
dr. by: HAMID
chk. by:

drawing no.
10-07

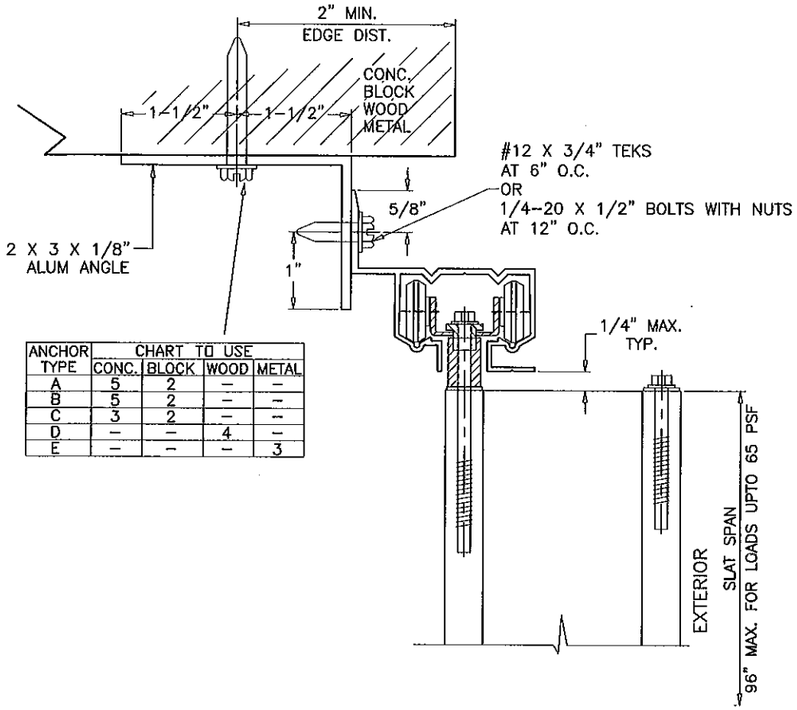

ANCHOR TYPE	CHART TO USE			
	CONC.	BLOCK	WOOD	METAL
A	5	2	–	–
B	5	2	–	–
C	3	2	–	–
D	–	–	4	–
E	–	–	–	3

ALT. BUILT-OUT HEADER

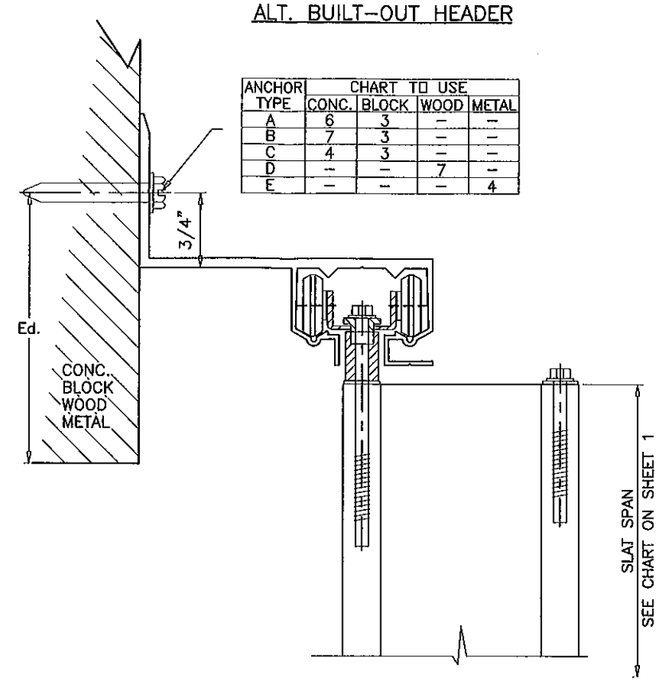

ANCHOR TYPE	CHART TO USE			
	CONC.	BLOCK	WOOD	METAL
A	6	3	–	–
B	7	3	–	–
C	4	3	–	–
D	–	–	7	–
E	–	–	–	4

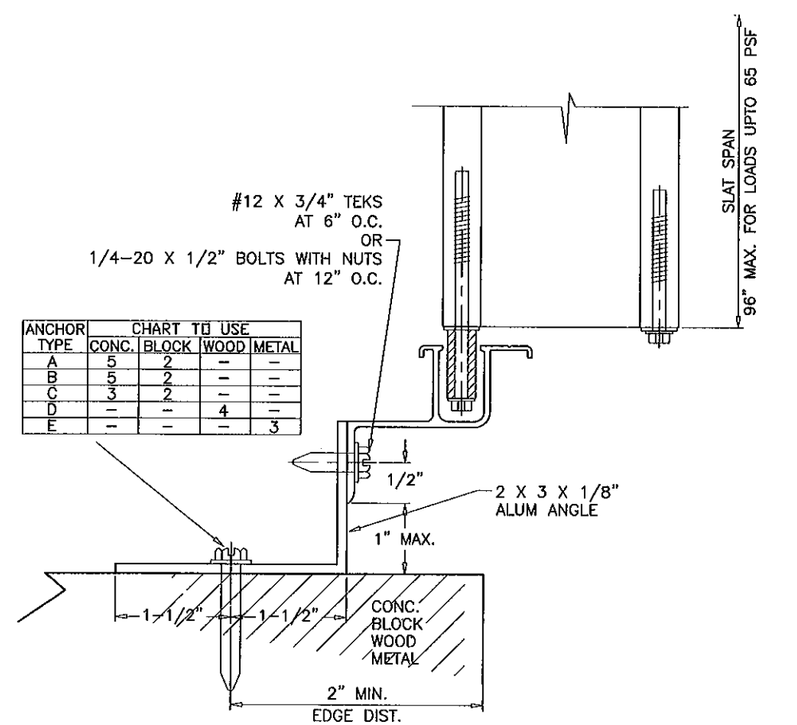

ANCHOR TYPE	CHART TO USE			
	CONC.	BLOCK	WOOD	METAL
A	5	2	–	–
B	5	2	–	–
C	3	2	–	–
D	–	–	4	–
E	–	–	–	3

ADJUSTABLE SILL

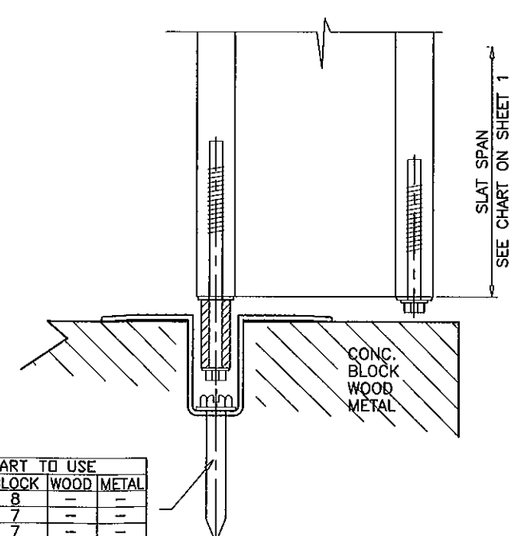

ANCHOR TYPE	CHART TO USE			
	CONC.	BLOCK	WOOD	METAL
A	8	8	–	–
B	8	7	–	–
C	7	7	–	–
D	–	–	6	–
E	–	–	–	8

HEADER AND SILL DETAILS CAN BE USED IN ANY COMBINATIONS.

Approved as complying with the Florida Building Code
Date 09/15/2011
NOA# 11-0112.01
Miami Dade Product Control
By

Engr: JAVAD AHMAD
CIVIL
FLA. PE # 70592
C.A.N. 3538

SEP 07 2011

AL-FAROOQ CORPORATION
ENGINEERS & PRODUCT DEVELOPMENT
1235 S.W. 87 AVE
MIAMI, FLORIDA 33174
TEL (305) 264-8100 FAX. (305) 262-6978

ACCORDION/10-07SOSF

DELTA-301 ALUMINUM ACCORDION SHUTTER

SLAS INC.
13690 S.W. 142 AVE. #28
MIAMI, FL. 33186
TEL(305) 225-1393 FAX(305) 225-1322

no	date	by	description

revisions:

date: 12-06-10
scale: 1/2" = 1"
dr. by: HAMID
chk. by:

drawing no.
10-07

BUILT-OUT CONDITION

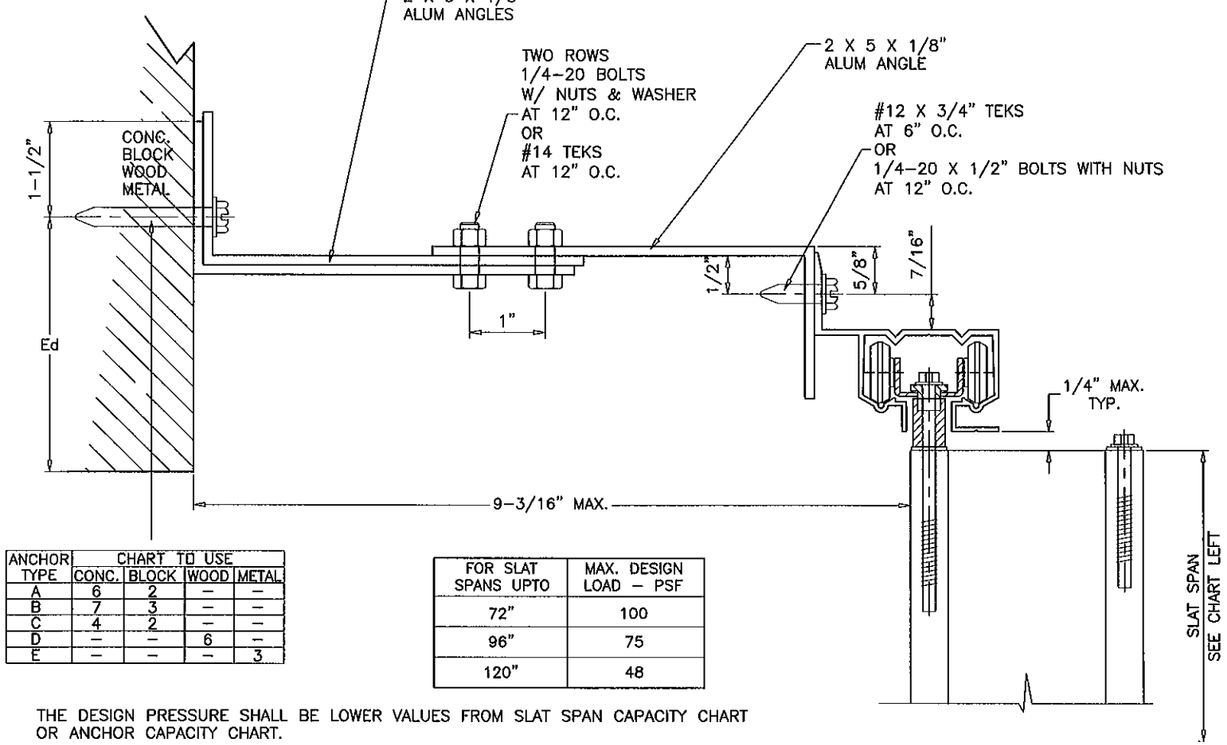

ANCHOR TYPE	CHART TO USE			
	CONC.	BLOCK	WOOD	METAL
A	6	2	–	–
B	7	3	–	–
C	4	2	–	–
D	–	–	6	–
E	–	–	–	3

FOR SLAT SPANS UPTO	MAX. DESIGN LOAD – PSF
72"	100
96"	75
120"	48

THE DESIGN PRESSURE SHALL BE LOWER VALUES FROM SLAT SPAN CAPACITY CHART OR ANCHOR CAPACITY CHART.

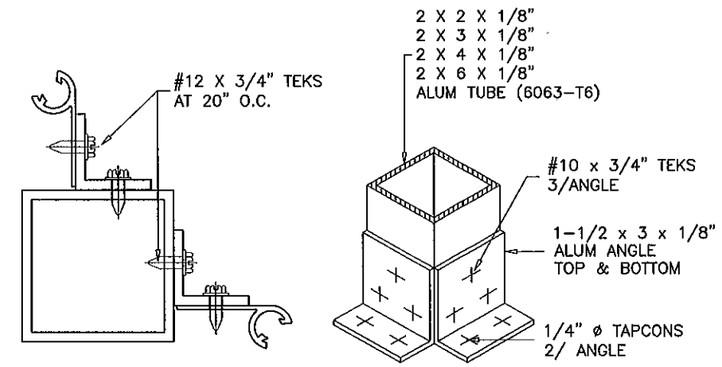

FIXED CORNER DETAIL

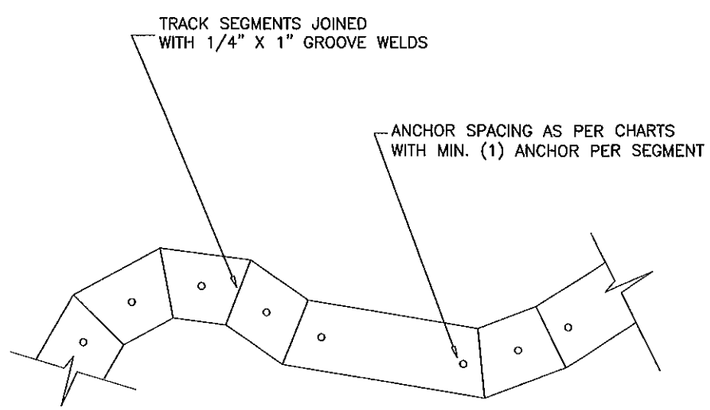

CURVED TRACK OPTION WITH SEGMENTED SECTIONS

Approved as complying with the
Florida Building Code
Date 09/15/2011
NOA# 11-0112.01
Miami Dade Product Control
By

Engr: JAVAD AHMAD
CIVIL
FLA. PE # 70592
C.A.N. 3538
SEP 07 2011

AL-FAROOQ CORPORATION
ENGINEERS & PRODUCT DEVELOPMENT
1235 S.W. 87 AVE
MIAMI, FLORIDA 33174
TEL. (305) 264-8100 FAX. (305) 262-6978

ACCORDION/10-07SOSF

DELTA-301 ALUMINUM ACCORDION SHUTTER

SLAS INC.
13690 S.W. 142 AVE. #28
MIAMI, FL. 33186
TEL(305) 225-1393 FAX(305) 225-1322

revisions:			
no	date	by	description

date: 12-06-10
scale: 1/2" = 1"
dr. by: HAMID
chk. by:

drawing no.
10-07

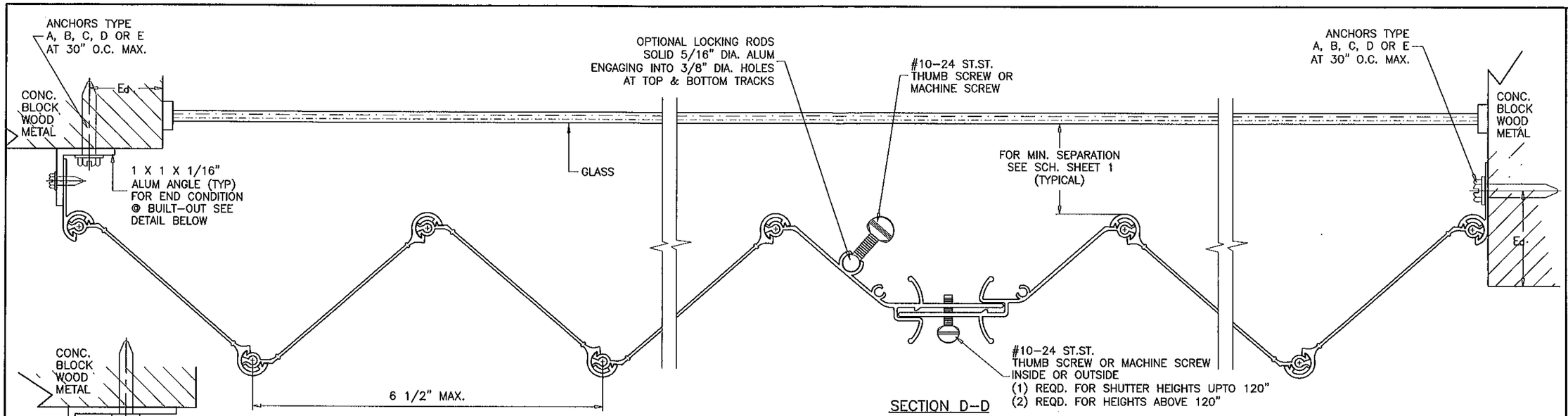

SECTION D-D

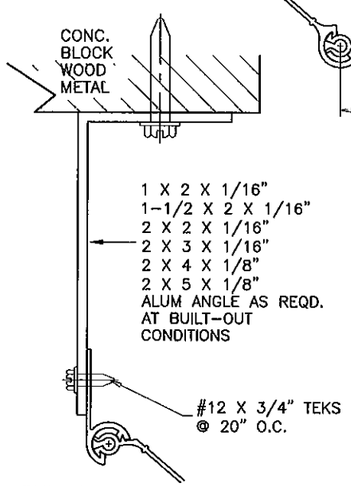

END CONDITION AT BUILT-OUT

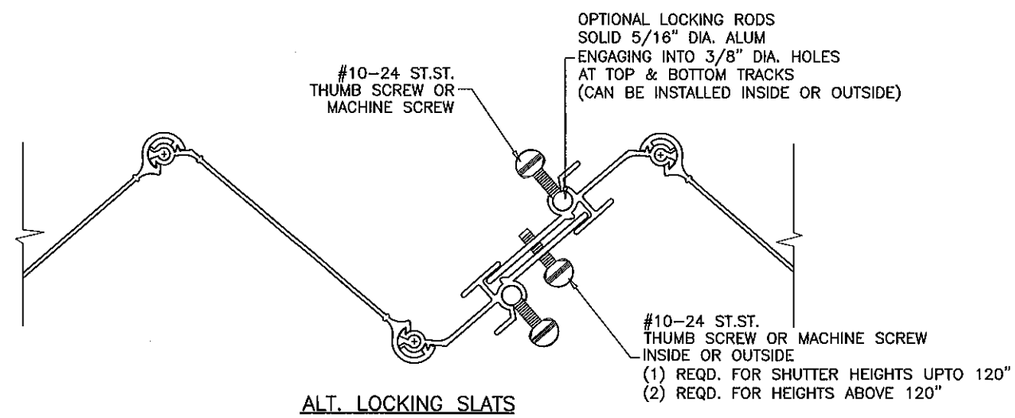

ALT. LOCKING SLATS

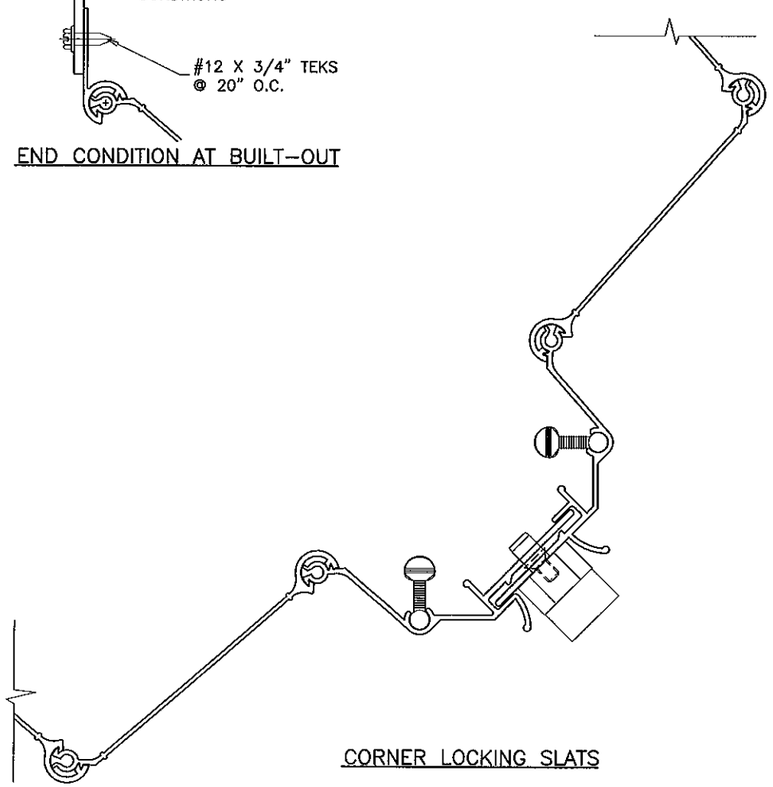

CORNER LOCKING SLATS

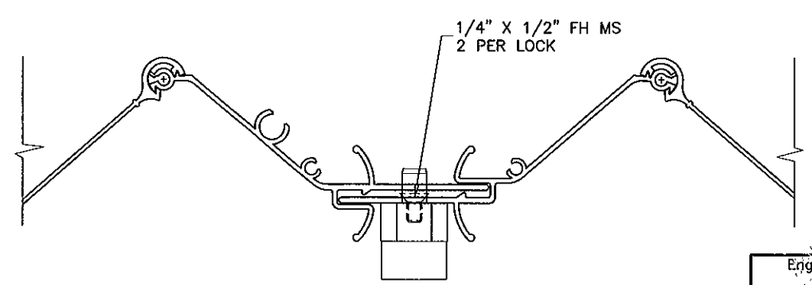

PLUNGER LOCK OPTION

LOCK CAN BE INSTALLED INSIDE OR OUTSIDE
IN LIEU OF THUMB SCREWS

Approved as complying with the Florida Building Code
Date 09/15/2011
NOA# 11-0112.01
Miami Dade Product Control
By

Engr: JAVAD AHMAD
CIVIL
FLA. PE # 70592
C.A.N. 3538
SEP 07 2011

AL-FAROOQ CORPORATION
ENGINEERS & PRODUCT DEVELOPMENT
1235 S.W. 87 AVE
MIAMI, FLORIDA 33174
TEL. (305) 264-8100 FAX. (305) 262-6978

ACCORDION/10-07SOSF

DELTA-301 ALUMINUM ACCORDION SHUTTER

SLAS INC.
13690 S.W. 142 AVE. #28
MIAMI, FL. 33186
TEL(305) 225-1393 FAX(305) 225-1322

revisions:

no	date	by	description

date: 12-06-10
scale: 1/2" = 1"
dr. by: HAMID
chk. by:

drawing no.
10-07

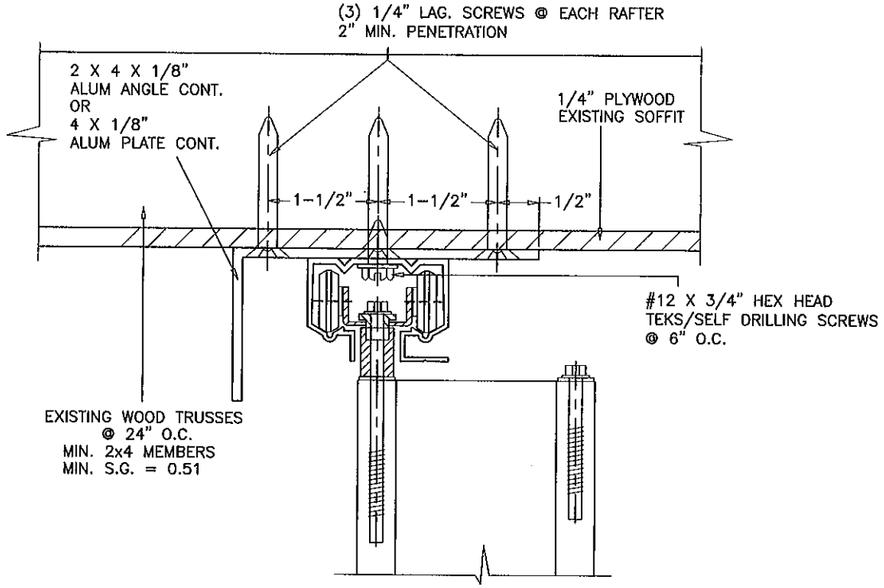

HEADER CONNECTION TO WOOD TRUSSES

FOR SHUTTER HEIGHT OF 72" MAX. DESIGN LOAD = 72 PSF
FOR SHUTTER HEIGHT OF 84" MAX. DESIGN LOAD = 62 PSF
FOR SHUTTER HEIGHT OF 96" MAX. DESIGN LOAD = 54 PSF
FOR SHUTTER HEIGHT OF 108" MAX. DESIGN LOAD = 48 PSF

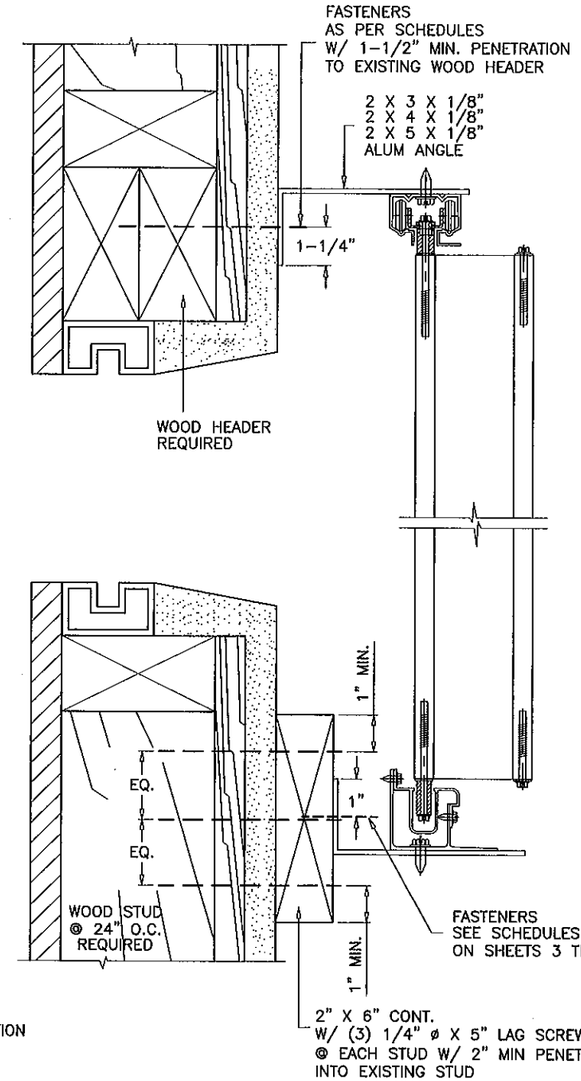

FOR SHUTTER HEIGHT OF 84" MAX. DESIGN LOAD = 62 PSF
FOR SHUTTER HEIGHT OF 96" MAX. DESIGN LOAD = 54 PSF
FOR SHUTTER HEIGHT OF 108" MAX. DESIGN LOAD = 48 PSF
FOR SHUTTER HEIGHT OF 120" MAX. DESIGN LOAD = 43 PSF

INSTALLATION DETAIL ON EXISTING WOOD BUCKS SCALE : 1/4"=1"

ABOVE DETAILS SHOWS CONNECTION OF 2X6 BUCK & 1X4 ALUM TUBE TO WOOD STUDS TO PROVIDE A CONTINUOUS SURFACE FOR SHUTTER INSTALLATION.

FOR INSTALLATION DETAILS OF HEADER/SILL TO CONTINUOUS WOOD MEMBERS SEE SHEETS 3 THRU 6.

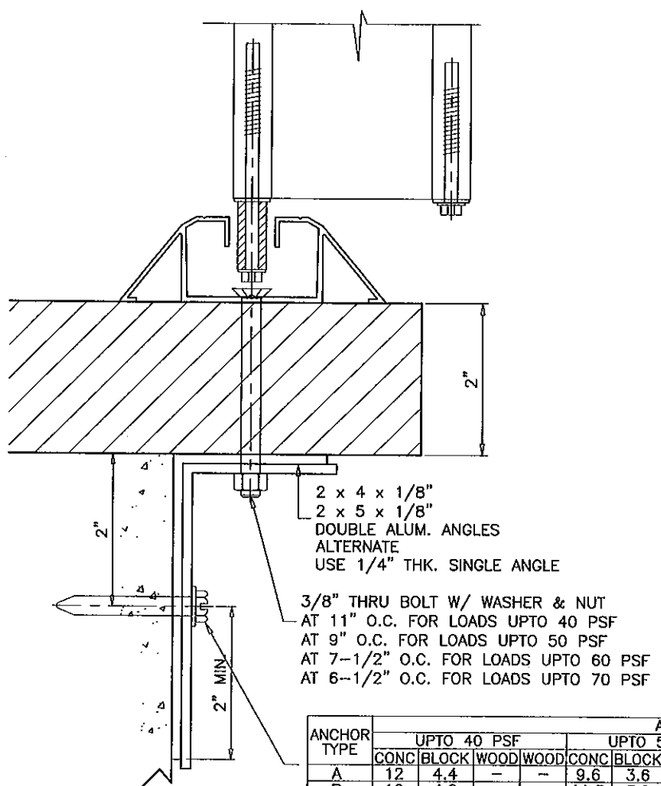

COUNTER TOP CONDITION
(PASS THRU WINDOW)
MAX SHUTTER HEIGHT = 6 FT.

ANCHOR TYPE	ANCHOR SPACING INCHES															
	UPTO 40 PSF				UPTO 50 PSF				UPTO 60 PSF				UPTO 70 PSF			
	CONC	BLOCK	WOOD	WOOD	CONC	BLOCK	WOOD	WOOD	CONC	BLOCK	WOOD	WOOD	CONC	BLOCK	WOOD	WOOD
A	12	4.4	–	–	9.6	3.6	–	–	8	3	–	–	6.8	–	–	–
B	12	4.9	–	–	11.5	3.9	–	–	9.6	3.3	–	–	8.2	–	–	–
D	–	–	12	–	–	–	12	–	–	–	10.4	–	–	–	8.9	–
E	–	–	–	7.5	–	–	–	6	–	–	–	5	–	–	–	4.3

Approved as complying with the Florida Building Code
Date 09/15/2011
NOA# 11-0112.01
Miami Dade Product Control
By

Engr: JAVAD AHMAD
CIVIL
FLA. PE # 70592
C.A.N. 3538
SEP 07 2011

AL-FAROOQ CORPORATION
ENGINEERS & PRODUCT DEVELOPMENT
1235 S.W. 87 AVE
MIAMI, FLORIDA 33174
TEL. (305) 264-8100 FAX. (305) 262-6978

ACCORDION/10-07SOSF

DELTA-301 ALUMINUM ACCORDION SHUTTER

SLAS INC.
13690 S.W. 142 AVE. #28
MIAMI, FL. 33186
TEL(305) 225-1393 FAX(305) 225-1322

revisions:			
no	date	by	description

date: 12-06-10
scale: 1/2" = 1"
dr. by: HAMID
chk. by:

drawing no.
10-07

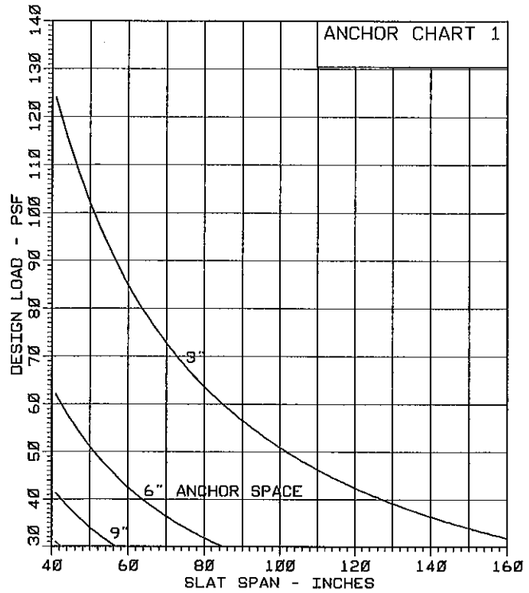

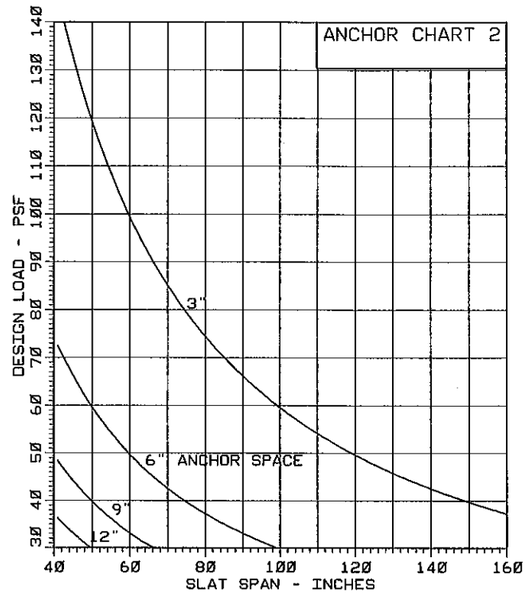

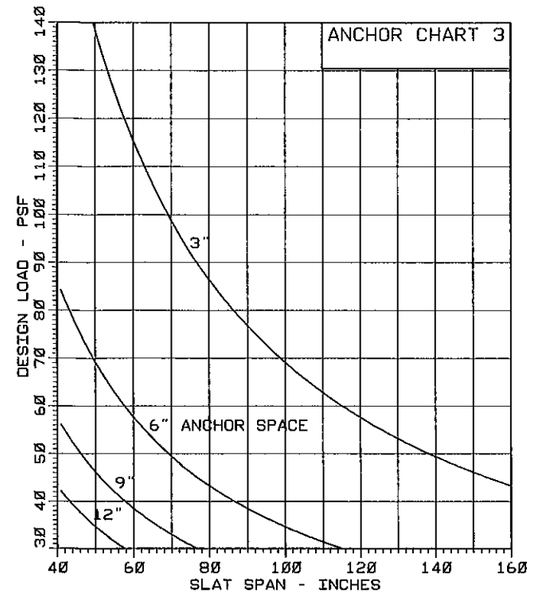

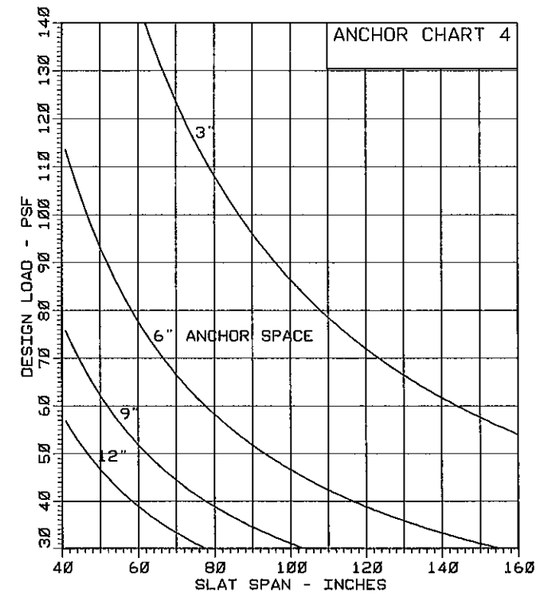

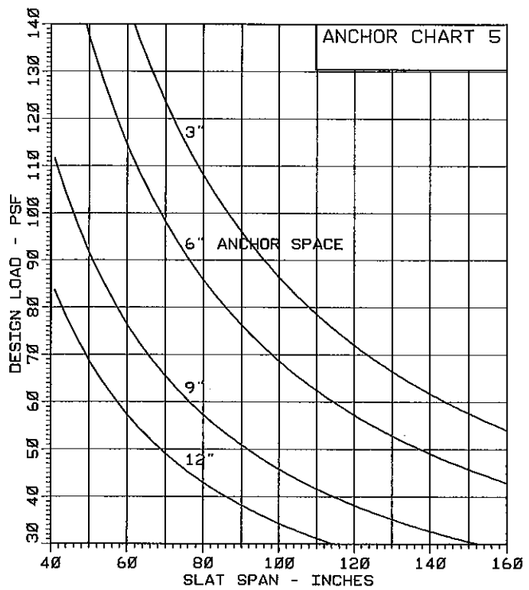

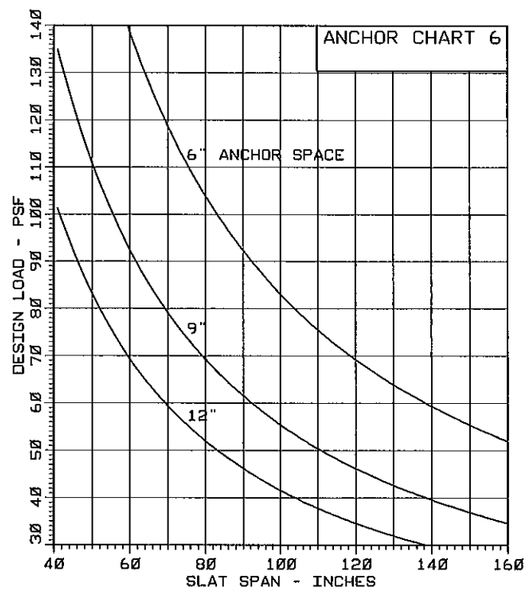

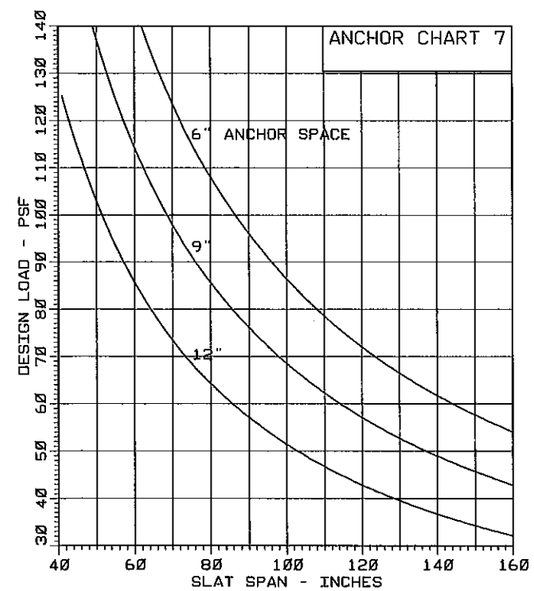

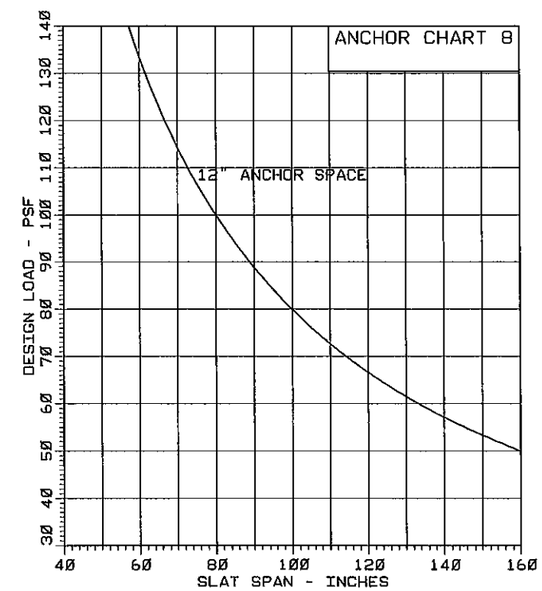

USE CHARTS 1 THRU 8 TO VERIFY ANCHOR REQUIREMENTS AND STRESS LIMITATIONS OF LOAD/SPAN COMBINATIONS FOR HEADER AND SILL.

Approved as complying with the Florida Building Code
Date 09/15/2011
NOA# 11-0112.01
Miami Dade Product Control
By

TYPICAL ANCHORS:

ANCHOR (A) = 1/4" DIA. ULTRACON (BY ELCO)
1-3/4" EMBEDMENT INTO 3000 PSI CONC.
1-1/4" EMBEDMENT INTO C-90 BLOCK

ANCHOR (B) 1/4" DIA. TAPCON (BY ITW)
1-3/4" EMBEDMENT INTO 3000 PSI CONC.
1-1/4" EMBEDMENT INTO C-90 BLOCK

ANCHOR (C) 1/4" RAWL CALK-IN (BY POWERS)
1" EMBEDMENT INTO 3000 PSI CONC.
OR C-90 BLOCK
2" MIN. EDGE DIST.

ANCHOR (D) 1/4" DIA. LAG SCREWS
1-1/2" MIN PENETRATION INTO WOOD(S.G.=0.55)

ANCHOR (E) 1/4" DIA. KWIK-FLEX SELF DRILLING SCREWS
INTO METAL STRUCTURES
(STEEL OR ALUMINUM 1/8" MIN. THICK.)

FASTENER SPACING IN CONC./MASONRY

CHARTS ARE BASED ON TYPICAL EDGE DISTANCE = 10d.
FOR LESSER EDGE DISTANCE DECREASE SPACING BY MULTIPLYING WITH THE FACTOR BELOW

EDGE DIST.	10d=2-1/2"	8d=2"	6d=1-1/2"	5d=1-1/4"
FACTOR	1.00	0.71	0.57	0.50

EXAMPLE: FOR 3" EDGE DIST. SPACING = 12" O.C. (FROM CHART)
FOR 2" EDGE DIST. SPACING = 12 X .71 = 8.5 O.C.

TYPICAL EDGE DISTANCE IN WOOD = 3/4"
TYPICAL END DISTANCE IN WOOD = 1"
NO REDUCTION FACTOR IS REQUIRED

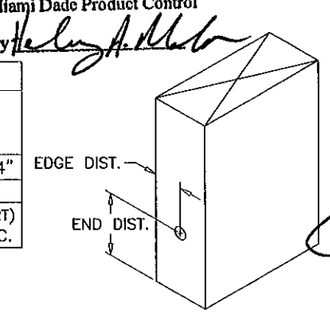

Engr: JAVAD AHMAD
CIVIL
FLA. PE # 70592
C.A.N. 3538

SEP 07 2011

AL-FAROOQ CORPORATION
ENGINEERS & PRODUCT DEVELOPMENT
1235 S.W. 87 AVE
MIAMI, FLORIDA 33174
TEL. (305) 264-8100 FAX. (305) 262-6978

ACCORDION/10-07SOSF

DELTA-301 ALUMINUM ACCORDION SHUTTER

SLAS INC.
13690 S.W. 142 AVE. #28
MIAMI, FL. 33186
TEL(305) 225-1393 FAX(305) 225-1322

revisions:

no.	date	by	description

date: 12-06-10
scale: 1/2" = 1"
dr. by: HAMID
chk. by:

drawing no. 10-07

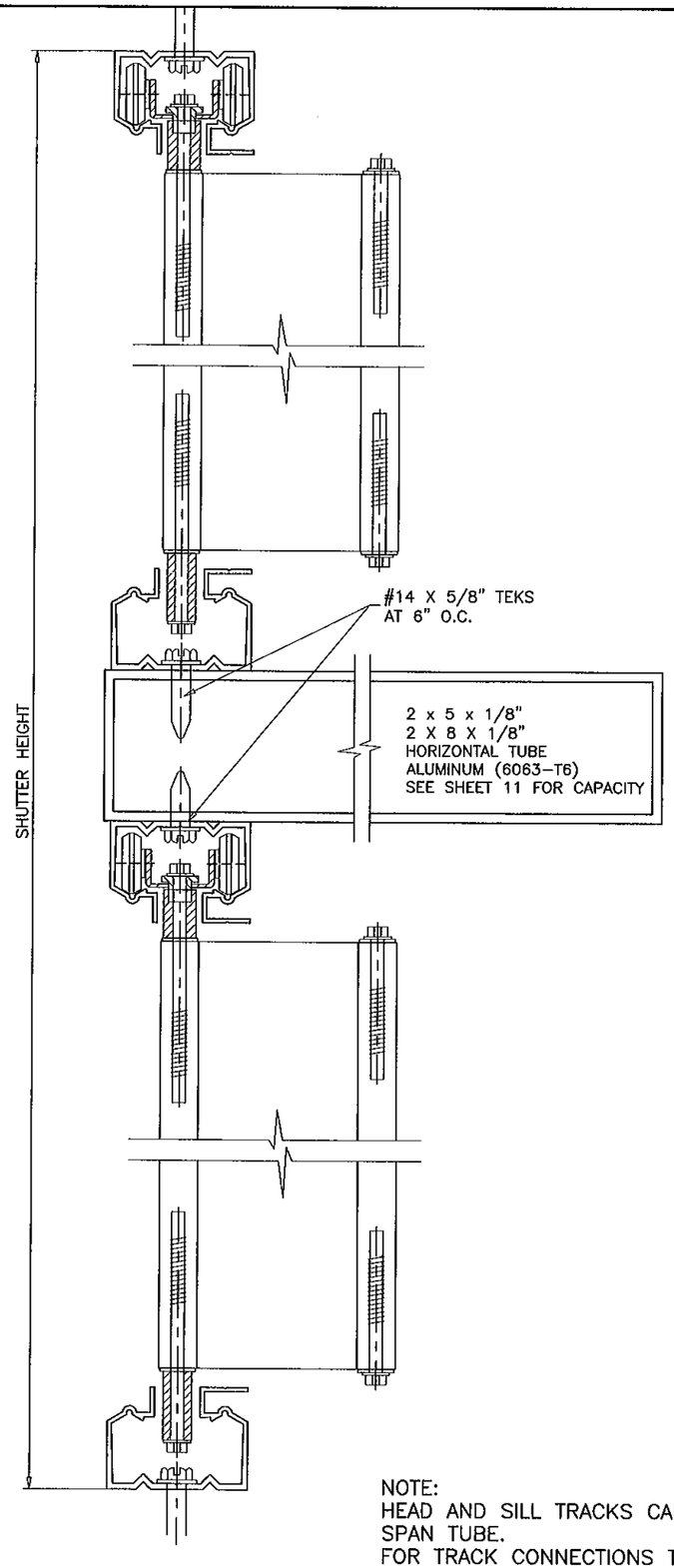

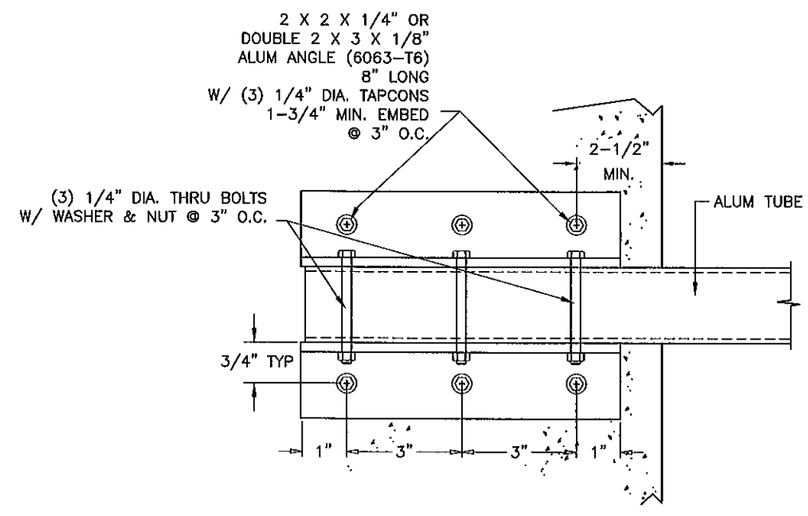

TUBE CONNECTION TO WALL

SCALE : 1/4"=1"

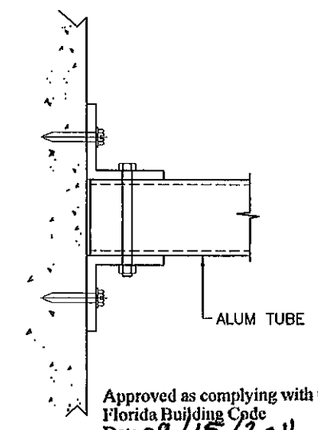

Approved as complying with the
Florida Building Code
Date 09/15/2011
NOA# 11-0112.01
Miami Dade Product Control
By

Engr: JAVAD AHMAD
CIVIL
FLA. PE # 70592
C.A.N. 3538

SEP 07 2011

NOTE:
HEAD AND SILL TRACKS CAN BE USED IN ANY COMBINATIONS AT SPAN TUBE.
FOR TRACK CONNECTIONS TO ALUMINUM TUBE SEE ANCHOR CHARTS ON SHEETS 3 THRU 6.

AL-FAROOQ CORPORATION
ENGINEERS & PRODUCT DEVELOPMENT
1235 S.W. 87 AVE
MIAMI, FLORIDA 33174
TEL. (305) 264-8100 FAX. (305) 262-6978

ACCORDION/10-07SOSF

DELTA-301 ALUMINUM ACCORDION SHUTTER

SLAS INC.
13690 S.W. 142 AVE. #28
MIAMI, FL. 33186
TEL(305) 225-1393 FAX(305) 225-1322

revisions:

no	date	by	description

date: 12-06-10
scale: 1/2" = 1"
dr. by: HAMID
chk. by:

drawing no.
10-07

DESIGN LOAD CAPACITY - PSF			
TRIBUTARY HEIGHT (H)	SPAN TUBE LENGTH	2 X 5 X 1/8" ALUM TUBE	2 X 8 X 1/8" ALUM TUBE
48"	96"	100.0	100.0
60"		100.0	100.0
72"		100.0	100.0
84"		86.0	100.0
96"		75.3	91.0
108"		66.9	82.0
120"		60.2	72.0
132"		54.8	60.0
144"		46.0	46.0
156"		34.0	34.0
160"		30.0	30.0
48"	102"	100.0	100.0
60"		100.0	100.0
72"		83.7	100.0
84"		71.7	100.0
96"		62.8	91.0
108"		55.8	82.0
120"		50.2	72.0
132"		45.7	60.0
144"		41.8	46.0
156"		34.0	34.0
160"		30.0	30.0
48"	108"	100.0	100.0
60"		84.6	100.0
72"		70.5	100.0
84"		60.4	100.0
96"		52.9	91.0
108"		47.0	82.0
120"		42.3	72.0
132"		38.5	60.0
144"		35.3	46.0
156"		32.5	34.0
160"		30.0	30.0
48"	114"	89.9	100.0
60"		71.9	100.0
72"		59.9	100.0
84"		51.4	100.0
96"		45.0	91.0
108"		40.0	82.0
120"		36.0	72.0
132"		32.7	60.0
144"		30.0	46.0
156"		27.7	34.0
160"		27.0	30.0
48"	120"	77.1	100.0
60"		61.7	100.0
72"		51.4	100.0
84"		44.1	100.0
96"		38.5	91.0
108"		34.3	82.0
120"		30.8	72.0
132"		28.0	60.0
144"		25.7	46.0
156"		23.7	34.0
160"		23.1	30.0

DESIGN LOAD CAPACITY - PSF			
TRIBUTARY HEIGHT (H)	SPAN TUBE LENGTH	2 X 5 X 1/8" ALUM TUBE	2 X 8 X 1/8" ALUM TUBE
48"	126"	66.6	100.0
60"		53.3	100.0
72"		44.4	100.0
84"		38.1	100.0
96"		33.3	87.8
108"		29.6	78.0
120"		26.6	70.2
132"		24.2	60.0
144"		22.2	46.0
156"		20.5	34.0
160"		–	30.0
48"	132"	57.9	100.0
60"		46.3	100.0
72"		38.6	100.0
84"		33.1	90.8
96"		29.0	79.5
108"		25.7	70.7
120"		23.2	63.6
132"		21.1	57.8
144"		–	46.0
156"		–	34.0
160"		–	30.0
48"	138"	50.7	100.0
60"		40.6	100.0
72"		33.8	96.4
84"		29.0	82.6
96"		25.3	72.3
108"		22.5	64.3
120"		20.3	57.8
132"		–	52.6
144"		–	46.0
156"		–	34.0
160"		–	30.0
48"	144"	44.6	100.0
60"		35.7	100.0
72"		29.7	88.0
84"		25.5	75.4
96"		22.3	66.0
108"		--	58.7
120"		–	52.8
132"		–	48.0
144"		–	44.0
156"		–	34.0
160"		–	30.0

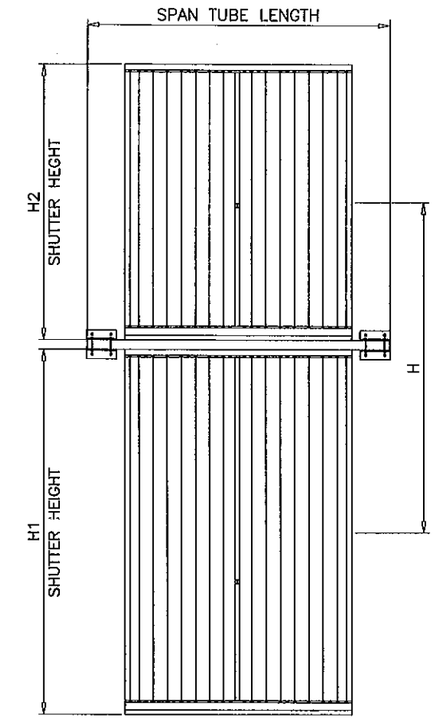

TRIBUTARY HEIGHT (H) = $\frac{H1 + H2}{2}$

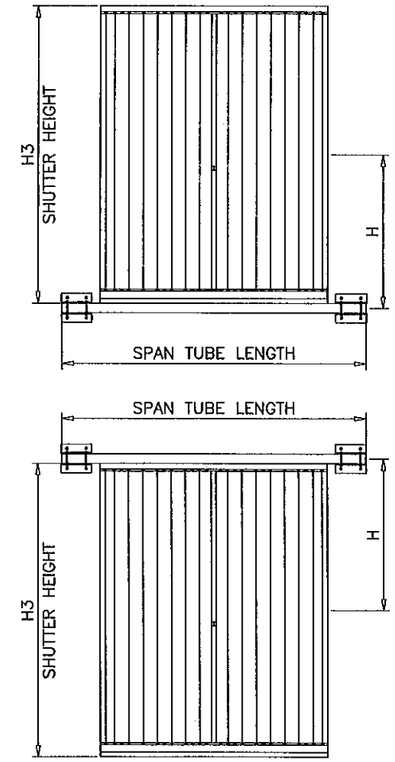

TRIBUTARY HEIGHT (H) = $\frac{H3}{2}$

TYPICAL ELEVATIONS

Approved as complying with the Florida Building Code
Date 09/15/2011
NOA# 11-0112.01
Miami Dade Product Control
By

Engr: JAVAD AHMAD
CIVIL
FLA. PE # 70592
C.A.N. 3538
SEP 07 2011

AL-FAROOQ CORPORATION
ENGINEERS & PRODUCT DEVELOPMENT
1235 S.W. 87 AVE
MIAMI, FLORIDA 33174
TEL. (305) 264-8100 FAX. (305) 262-6978
ACCORDION/10-07SOSF

DELTA-301 ALUMINUM ACCORDION SHUTTER

SLAS INC.
13690 S.W. 142 AVE. #28
MIAMI, FL. 33186
TEL(305) 225-1393 FAX(305) 225-1322

revisions:

no	date	by	description

date: 12-06-10
scale: 1/2" = 1"
dr. by: HAMID
chk. by:

drawing no.
10-07