MIAMI-DADE COUNTY
BUILDING AND NEIGHBORHOOD COMPLIANCE DEPARTMENT (BNC)
BOARD AND CODE ADMINISTRATION DIVISION

MIAMI-DADE COUNTY
PRODUCT CONTROL SECTION
11805 SW 26 Street, Room 208
Miami, Florida 33175-2474
T (786) 315-2590 F (786) 315-2599
www.miamidade.gov/building

NOTICE OF ACCEPTANCE (NOA)

Gulfstream Aluminum and Shutter Corporation
3001 SE Gran Park Way
Stuart, Florida 34997

SCOPE:
This NOA is being issued under the applicable rules and regulations governing the use of construction materials. The documentation submitted has been reviewed by Miami-Dade County Product Control Section and accepted by the Board of Rules and Appeals (BORA) to be used in Miami Dade County and other areas where allowed by the Authority Having Jurisdiction (AHJ).

This NOA shall not be valid after the expiration date stated below. The Miami-Dade County Product Control Section (In Miami Dade County) and/or the AHJ (in areas other than Miami Dade County) reserve the right to have this product or material tested for quality assurance purposes. If this product or material fails to perform in the accepted manner, the manufacturer will incur the expense of such testing and the AHJ may immediately revoke, modify, or suspend the use of such product or material within their jurisdiction. BORA reserves the right to revoke this acceptance, if it is determined by Miami-Dade County Product Control Section that this product or material fails to meet the requirements of the applicable building code.

This product is approved as described herein, and has been designed to comply with the High Velocity Hurricane Zone of the Florida Building Code.

DESCRIPTION: "Impact" Aluminum Hinged Colonial Shutter

APPROVAL DOCUMENT: Drawing No. GSA002, titled "Aluminum Hinged Colonial Shutter (Impact)", sheets 1 through 9 of 9, prepared by Certworks, LLC, dated September 28, 2009, last revision #A dated January 20, 2010, signed and sealed by Kristina S. Daugherty, P.E. bearing the Miami-Dade County Product Control Renewal stamp with the Notice of Acceptance number and expiration date by the Miami-Dade County Product Control Section.

MISSILE IMPACT RATING: Large and Small Missile Impact Resistant

LABELING: Each unit shall bear a permanent label with the manufacturer's name or logo, city, state and the following statement: "Miami-Dade County Product Control Approved", unless otherwise noted herein.

RENEWAL of this NOA shall be considered after a renewal application has been filed and there has been no change in the applicable building code negatively affecting the performance of this product.

TERMINATION of this NOA will occur after the expiration date or if there has been a revision or change in the materials, use, and/or manufacture of the product or process. Misuse of this NOA as an endorsement of any product, for sales, advertising or any other purposes shall automatically terminate this NOA. Failure to comply with any section of this NOA shall be cause for termination and removal of NOA.

ADVERTISEMENT: The NOA number preceded by the words Miami-Dade County, Florida, and followed by the expiration date may be displayed in advertising literature. If any portion of the NOA is displayed, then it shall be done in its entirety.

INSPECTION: A copy of this entire NOA shall be provided to the user by the manufacturer or its distributors and shall be available for inspection at the job site at the request of the Building Official.

This NOA **renews NOA #09-0706.11** and consists of this page 1, evidence submitted pages E-1 & E-2 as well as approval document mentioned above.

The submitted documentation was reviewed by **Helmy A. Makar, P.E., M.S.**

MIAMI-DADE COUNTY APPROVED

Helmy A. Makar
03/03/2011

NOA No. 11-0113.16
Expiration Date: 05/06/2015
Approval Date: 03/03/2011

Gulfstream Aluminum and Shutter Corporation

NOTICE OF ACCEPTANCE: EVIDENCE SUBMITTED

1. EVIDENCE SUBMITTED UNDER PREVIOUS APPROVAL #00-0411.10

A. DRAWINGS

1. *Drawing No. 1000, titled " Impact Colonial Shutter ", prepared by W. W. Schaefer Engineering & Consulting, P.A., dated January 10, 2001, sheets 1 through 7 of 7, signed and sealed by Warren W. Schaefer, P.E.*

B. TESTS

1. *Test Report on: 1) Large Missile Impact Test, per PA-201; 2) Cyclic Wind Pressure Test, per PA-203; and 3) Uniform Static Air Pressure test per PA-202, of colonial shutters, prepared by Hurricane Test Laboratory Inc., Report No.* ***0205-1201-99****, dated March 23, 2000, signed and sealed by Vinu J. Abraham, P.E.*

C. CALCULATIONS

1. *Anchor analysis and calculations dated 12/24/99, Pages 1 to 15, prepared by W. W. Schaefer Engineering & Consulting, P.A., signed and sealed by Warren W. Schaefer, P.E.*

D. MATERIAL CERTIFICATION

1. *Certified Tensile Test Report No. 0AM-142, prepared by QC Metallurgical Inc., dated 03/02/2000, per ASTM E8-93, signed and sealed by Frank Grate, P.E.*

2. EVIDENCE SUBMITTED UNDER PREVIOUS APPROVAL 3 04-0325.02

A. DRAWINGS

1. *Drawing No. 1000, titled "Impact Colonial Shutters", sheets 1 through 7 of 7, prepared by W. W. Schaefer Engineering & Consulting, P.A., dated January 10, 2001, signed and sealed by Warren W. Schaefer, P.E. on March 18, 2004.*

B. TESTS

1. *None.*

C. CALCULATIONS

1. *None.*

D. QUALITY ASSURANCE

1. *By Miami-Dade County Building Code Compliance Office.*

E. MATERIAL CERTIFICATIONS

1. *None.*

Hamy A. Makar, P.E., M.S.
BNC, Product Control Unit Supervisor
NOA No. 11-0113.16
Expiration Date: 05/06/2015
Approval Date: 03/03/2011

NOTICE OF ACCEPTANCE: EVIDENCE SUBMITTED

3. EVIDENCE SUBMITTED UNDER PREVIOUS APPROVAL # 09-0706.11

A. DRAWINGS

1. *Drawing No. GSA002, titled "Aluminum Hinged Colonial Shutter (Impact)", sheets 1 through 9 of 9, prepared by Certworks, LLC, dated September 28, 2009, last revision #A dated January 20, 2010, signed and sealed by Kristina S. Daugherty, P.E.*

B. TESTS

1. *None.*

C. CALCULATIONS

1. *Anchor analysis and calculations dated 09/28/2009, Pages 1 to 18, prepared by Certworks, LLC, signed and sealed by Kristina S. Daugherty, P.E.*

D. QUALITY ASSURANCE

1. *By Miami-Dade County Building Code Compliance Office.*

E. MATERIAL CERTIFICATIONS

1. *None.*

4. NEW EVIDENCE SUBMITTED

A. DRAWINGS

1. *None.*

B. TESTS

1. *Test Report on: 1) Large Missile Impact Test, per PA-201; 2) Cyclic Wind Pressure Test, per PA-203; and 3) Uniform Static Air Pressure test per PA-202, of colonial shutters, prepared by Hurricane Test Laboratory Inc., Report No.* ***0205-0409-10****, dated November 03, 2010, signed and sealed by Vinu J. Abraham, P.E.*

C. CALCULATIONS

1. *None.*

D. QUALITY ASSURANCE

1. *By Miami-Dade County Building and Neighborhood Compliance Department.*

E. MATERIAL CERTIFICATIONS

1. *None.*

Helmy A. Makar, P.E., M.S.
BNC, Product Control Unit Supervisor
NOA No. 11-0113.16
Expiration Date: 05/06/2015
Approval Date: 03/03/2011

GULFSTREAM ALUMINUM & SHUTTER CORP.

ALUMINUM HINGED COLONIAL SHUTTER (IMPACT)

INSTALLATION NOTES:

1. ONE (1) INSTALLATION ANCHOR IS REQUIRED AT EACH ANCHOR LOCATION SHOWN.
2. THE NUMBER OF INSTALLATION ANCHORS DEPICTED IS THE MINIMUM NUMBER OF ANCHORS TO BE USED FOR PRODUCT INSTALLATION.
3. MINIMUM EMBEDMENT AND EDGE DISTANCE EXCLUDE WALL FINISHES, INCLUDING BUT NOT LIMITED TO STUCCO, FOAM, BRICK VENEER, AND SIDING.
4. INSTALLATION ANCHORS AND ASSOCIATED HARDWARE MUST BE MADE OF CORROSION RESISTANT MATERIAL OR HAVE A CORROSION RESISTANT COATING.
5. FOR HOLLOW BLOCK AND GROUT FILLED BLOCK, DO NOT INSTALL INSTALLATION ANCHORS INTO MORTAR JOINTS. EDGE DISTANCE IS MEASURED FROM FREE EDGE OF BLOCK OR EDGE OF MORTAR JOINT INTO FACE SHELL OF BLOCK.
6. INSTALLATION ANCHORS SHALL BE INSTALLED IN ACCORDANCE WITH ANCHOR MANUFACTURER'S INSTALLATION INSTRUCTIONS, AND ANCHORS SHALL NOT BE USED IN SUBSTRATES WITH STRENGTHS LESS THAN THE MINIMUM STRENGTH SPECIFIED BY THE ANCHOR MANUFACTURER.
7. INSTALLATION ANCHOR CAPACITIES FOR PRODUCTS HEREIN ARE BASED ON SUBSTRATE MATERIALS WITH THE FOLLOWING PROPERTIES:
   A. WOOD - MINIMUM SPECIFIC GRAVITY OF 0.55.
   B. CONCRETE -MINIMUM COMPRESSIVE STRENGTH OF 3000 PSI.
   C. MASONRY - STRENGTH CONFORMANCE TO ASTM C-90, GRADE N, TYPE 1 (OR GREATER).
8. EACH SHUTTER SHALL HAVE A LEGIBLE & READILY VISIBLE MARKING INSTRUCTING THE OWNER/TENANT TO SECURE THE SHUTTER WITH BRACKETS & STORM BARS,PER THESE APPROVED DRAWINGS DURING PERIODS OF HURRICANE WARNING.
9. SHUTTER WIDTH SHALL BE RESTRICTED BY THE MAXIMUM DIMENSIONS SHOWN ON SHEETS 2 & 3. SHUTTER HEIGHT MAY EXCEED 96" (UP TO 144") PROVIDING THE REQUIRED NUMBER & SPACING OF STORM BARS ARE USED.
10. EACH SHUTTER SHALL BE PERMANENTLY MARKED AS FOLLOWS:
    GULFSTREAM ALUMINUM & SHUTTER CORP.
    STUART, FL
    MIAMI-DADE COUNTY PRODUCT CONTROL APPROVED

GENERAL NOTES:

1. THE PRODUCT SHOWN HEREIN IS DESIGNED AND MANUFACTURED TO COMPLY WITH THE 2007 FLORIDA BUILDING CODE (FBC), INCLUDING HVHZ AND HAS BEEN EVALUATED ACCORDING TO THE FOLLOWING:
   - TAS 201-94
   - TAS 202-94
   - TAS 203-94
2. ADEQUACY OF THE EXISTING STRUCTURAL CONCRETE/MASONRY AND 2X FRAMING AS A MAIN WIND FORCE RESISTING SYSTEM CAPABLE OF WITHSTANDING AND TRANSFERRING APPLIED PRODUCT LOADS TO THE FOUNDATION IS THE RESPONSIBILITY OF THE ENGINEER OR ARCHITECT OF RECORD FOR THE PROJECT OF INSTALLATION.
3. 1X AND 2X BUCKS (WHEN USED) SHALL BE DESIGNED AND ANCHORED TO PROPERLY TRANSFER ALL LOADS TO THE STRUCTURE. BUCK DESIGN AND INSTALLATION IS THE RESPONSIBILITY OF THE ENGINEER OR ARCHITECT OF RECORD FOR THE PROJECT OF INSTALLATION.
4. THE INSTALLATION DETAILS DESCRIBED HEREIN ARE GENERIC AND MAY NOT REFLECT ACTUAL CONDITIONS FOR A SPECIFIC SITE. IF SITE CONDITIONS CAUSE INSTALLATION TO DEVIATE FROM THE REQUIREMENTS DETAILED HEREIN, A LICENSED ENGINEER OR ARCHITECT SHALL PREPARE SITE SPECIFIC DOCUMENTS FOR USE WITH THIS DOCUMENT.
5. SHUTTER MATERIAL: ALUMINUM 6063-T6
6. THESE SHUTTER SYSTEMS HAVE BEEN TESTED, ANALYZED & APPROVED FOR WIND PRESSURES NOT TO EXCEED THOSE SHOWN IN THE LOAD TABLES ON SHEETS 8 & 9.

TABLE OF CONTENTS

SHEET	REVISION	SHEET DESCRIPTION
1	A	INSTALLATION & GENERAL NOTES
2	-	ELEVATIONS
3	-	ELEVATIONS
4	-	VERTICAL SECTIONS
5	-	HORIZONTAL SECTIONS & DETAILS
6	A	BILL OF MATERIALS & COMPONENTS
7	-	COMPONENTS
8	A	PRESSURE LOAD TABLES
9	-	PRESSURE LOAD TABLES

MAX. DESIGN PRESSURE RATING	
+80.0 / -80.0 PSF	SMALL AND LARGE MISSILE IMPACT RATED

PRODUCT RENEWED
as complying with the Florida Building Code
Acceptance No 11-0113.16
Expiration Date 05/06/2015
By Helena A. Molina
Miami Dade Product Control

PRODUCT REVISED
as complying with the Florida Building Code
Acceptance No 09-0706.11
Expiration Date 05/06/2010
By Helena A. Molina
Miami Dade Product Control Division

GULFSTREAM ALUMINUM & SHUTTER CORPORATION
3001 S.E. GRAN PARK WAY
STUART, FLORIDA 34997
PH: (800) 244-4143 FX: (772) 287-9740

TITLE: COLONIAL SHUTTER INSTALLATION & GENERAL NOTES

PREPARED BY:
CERTWORKS, LLC
127 W. FAIRBANKS AVE., STE. 438
WINTER PARK, FL 32789
PH: (407) 644-6957 FX: (407) 644-2366

REVISIONS

NO.	DESCRIPTION	BY	DATE
A	REVISED PER MD COMMENTS	MS	01.20.10

1-25-10

KRISTINA S. DAUGHERTY
FLORIDA P.E. LICENSE
127 W. FAIRBANKS AVE., STE. 438
WINTER PARK, FL 32789
FBPE CERT. OF AUTHORIZATION NO. 28520

DATE: 09.28.09
DWN BY: JLR
CHK BY: KSD
SCALE: NTS
DWG #: GSA002
SHEET: 1 OF 9

1/25/2010 10:09 AM
p:\projects\gulfstream aluminum\ind-p-09-0512.4 (colonial shutter)\dwgs\gsa002 colonial shutter (im).dwg

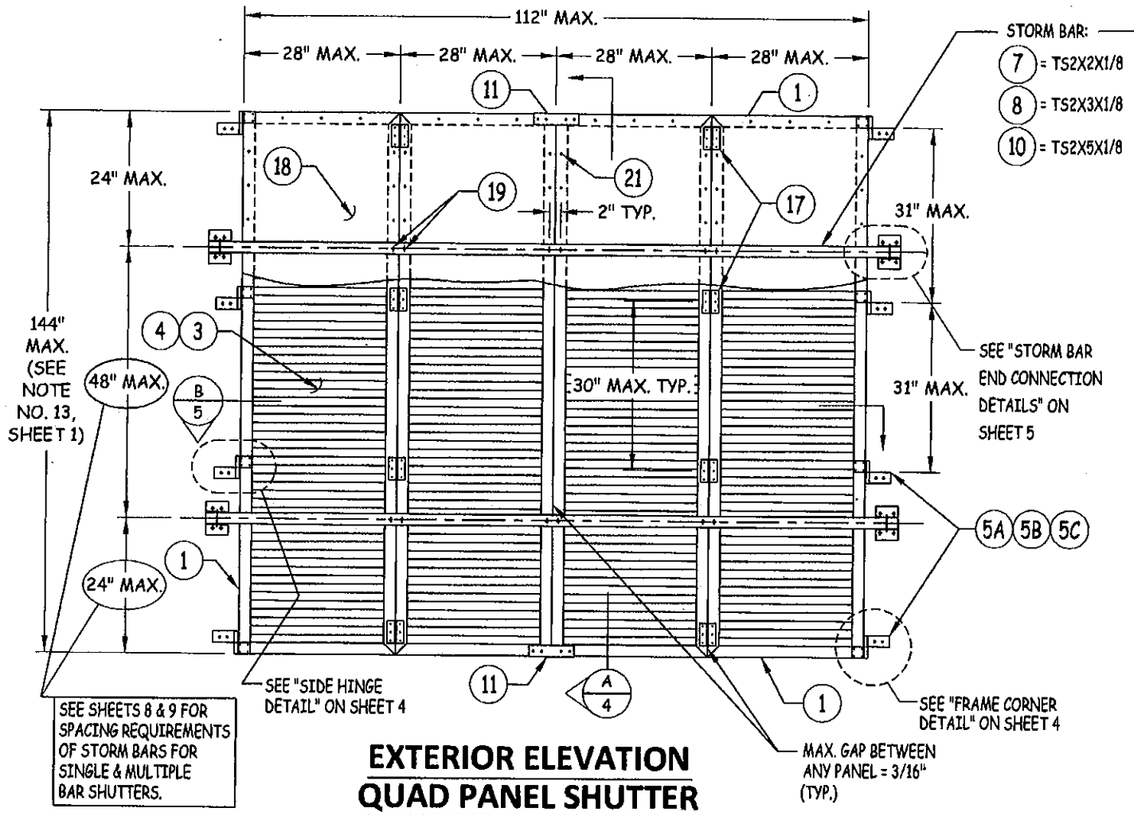

EXTERIOR ELEVATION
QUAD PANEL SHUTTER

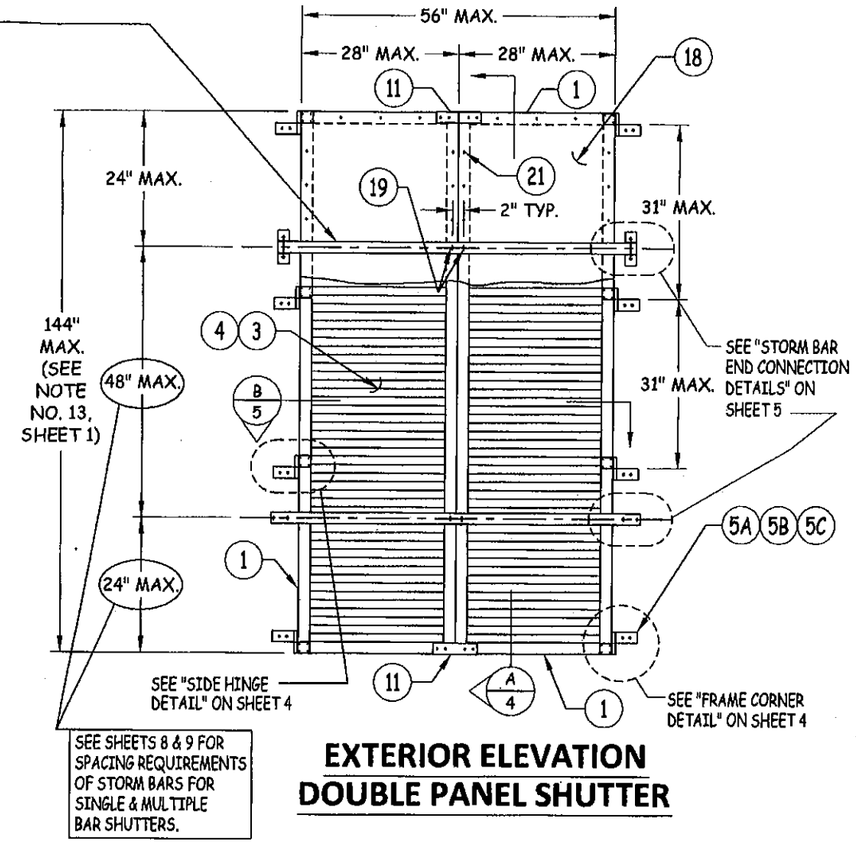

EXTERIOR ELEVATION
DOUBLE PANEL SHUTTER

NOTE: SINGLE & THREE PANEL SHUTTERS ARE ALSO PART OF THIS APPROVAL. SINGLE PANEL SHUTTERS WILL COMPLY WITH THE DOUBLE PANEL SHUTTER REQUIREMENTS & THE THREE PANEL SHUTTERS WILL COMPLY WITH THE QUAD PANEL SHUTTER REQUIREMENTS.

STORM BAR NOTE: THE NUMBER OF STORM BARS REQUIRED WITH EACH SHUTTER TYPICALLY VARIES FROM 1 TO 3 & IS DEPENDENT ON SHUTTER SIZE & REQUIRED DESIGN PRESSURE. SEE ELEVATION SKETCHES ON SHEET 3 & LOAD TABLES ON SHEETS 8-9 FOR STORM BAR REQUIREMENTS.

PRODUCT RENEWED
as complying with the Florida Building Code
Acceptance No 11-0113.16
Expiration Date 05/06/2015
By [signature]
Miami Dade Product Control

PRODUCT REVISED
as complying with the Florida Building Code
Acceptance No 09-0706.11
Expiration Date 05/06/2010
By [signature]
Miami Dade Product Control Division

Gulfstream
GULFSTREAM ALUMINUM & SHUTTER CORPORATION
3001 S.E. GRAN PARK WAY
STUART, FLORIDA 34997
PH: (800) 244-4143 FX: (772) 287-9740

TITLE: COLONIAL SHUTTER ELEVATIONS

PREPARED BY:
CERTWORKS, LLC
127 W. FAIRBANKS AVE., STE. 438
WINTER PARK, FL 32789
PH: (407) 644-6957 FX: (407) 644-2366

REVISIONS

NO.	DESCRIPTION	BY	DATE

1-25-10

KRISTINA S. DAUGHERTY
FLORIDA P. E. NO. 68455
127 W. FAIRBANKS AVE., STE. 438
WINTER PARK, FL 32789
FBPE CERT. OF AUTHORIZATION NO. 28520

DATE: 09.28.09
DWN BY: JLR
CHK BY: KSD
SCALE: NTS
DWG #: GSA002
SHEET: 2 OF 9

1/25/2010 10:09 AM
p:\projects\gulfstream aluminum\md-p-09-0512.4 (colonial shutter)\dwgs\gsa002 colonial shutter (tm).dwg

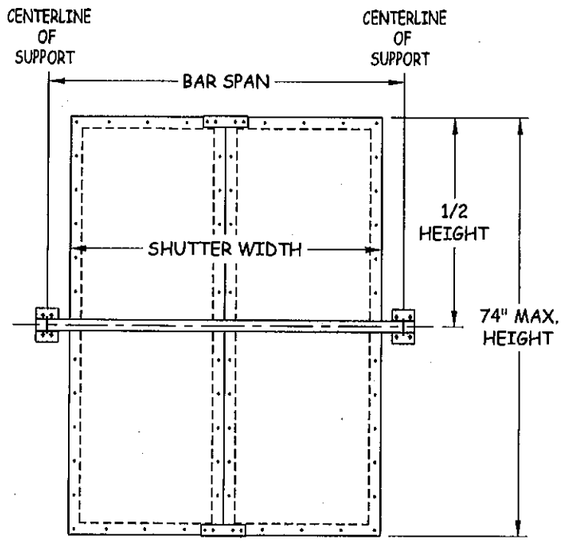

EXTERIOR ELEVATION
SINGLE BAR

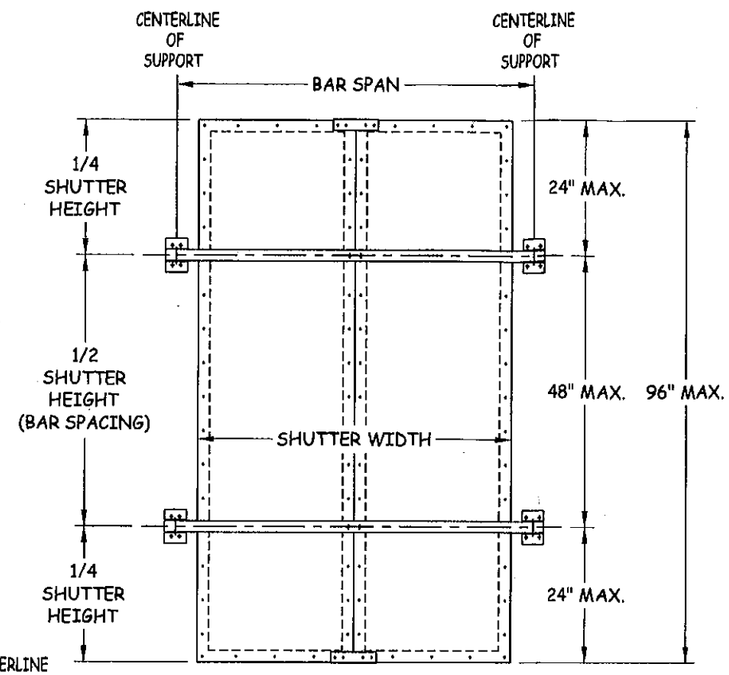

EXTERIOR ELEVATION
TWO BARS

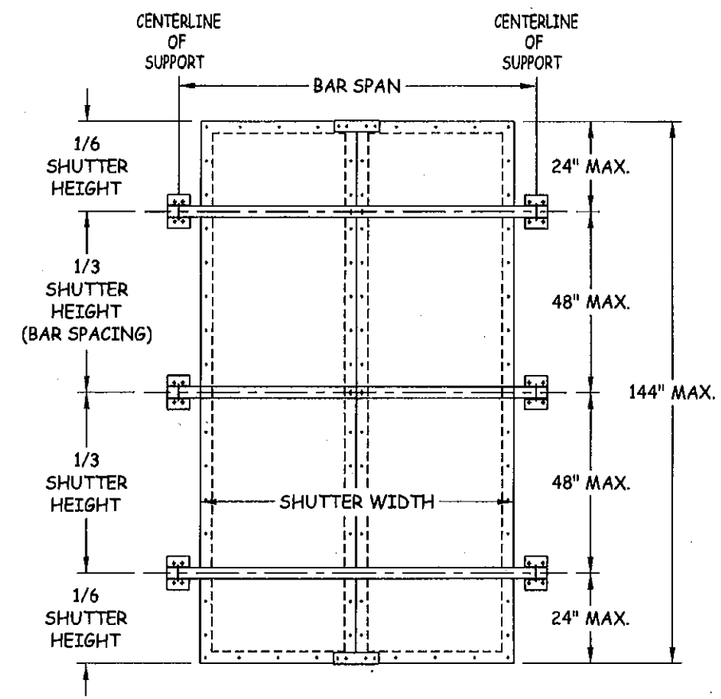

EXTERIOR ELEVATION
THREE BARS

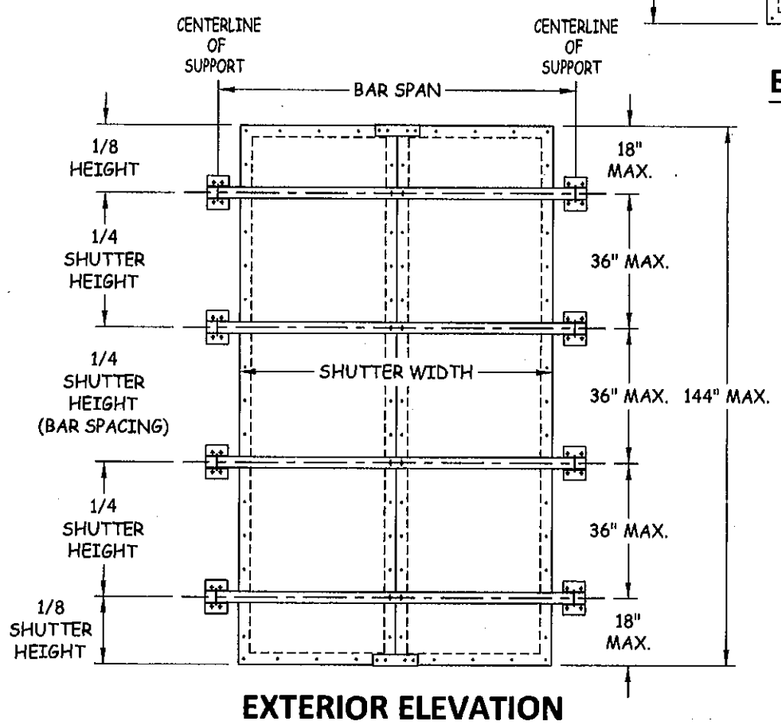

EXTERIOR ELEVATION
FOUR BARS

ALLOWABLE PRESSURE TABLE FOR SINGLE BAR SHUTTERS		
SHUTTER HEIGHT	PRESSURE (PSF)	
	POSITIVE	NEGATIVE
54" & LESS	80.0	80.0
56"	77.0	77.0
58"	74.0	74.0
60"	71.0	71.0
62"	68.0	68.0
64"	65.0	65.0
66"	60.0	60.0
68"	55.0	55.0
70"	49.7	50.0
72"	44.4	45.0
74"	39.8	40.0

PRESSURE TABLE NOTES:

1. THE SHUTTER MUST BE PLACED A MIN. DISTANCE OF 2.125" AWAY FROM THE GLASS.
2. SEE INSTRUCTIONS ON SHEET 9 FOR USE OF ALL LOAD TABLES.

PRODUCT RENEWED
as complying with the Florida Building Code
Acceptance No 11-0113.16
Expiration Date 05/06/2015
By Helena A. Melo
Miami Dade Product Control

PRODUCT REVISED
as complying with the Florida Building Code
Acceptance No 09-0706.11
Expiration Date 05/06/2016
By Helena A. Melo
Miami Dade Product Control Division

Gulfstream
GULFSTREAM ALUMINUM & SHUTTER CORPORATION
3001 S.E. GRAN PARK WAY
STUART, FLORIDA 34997
PH: (800) 244-4143 FX: (772) 287-9740

TITLE: COLONIAL SHUTTER ELEVATIONS

PREPARED BY:
CERTWORKS, LLC
127 W. FAIRBANKS AVE., STE. 438
WINTER PARK, FL 32789
PH: (407) 644-6957 FX: (407) 644-2366

REVISIONS

NO.	DESCRIPTION	BY	DATE

1-25-10

KRISTINA S. DAUGHERTY
FLORIDA P.E. NO. 68455
127 W. FAIRBANKS AVE., STE. 438
WINTER PARK, FL 32789
FBPE CERT. OF AUTHORIZATION NO. 26520

DATE: 09.28.09	DWN BY: JLR	CHK BY: KSD	SCALE: NTS

DWG #: GSA002

SHEET: 3 OF 9

1/25/2010 10:09 AM

p:\projects\gulfstream aluminum\mc-p-09-0512.4 (colonial shutter)\dwgs\gsa002 colonial shutter (3m).dwg

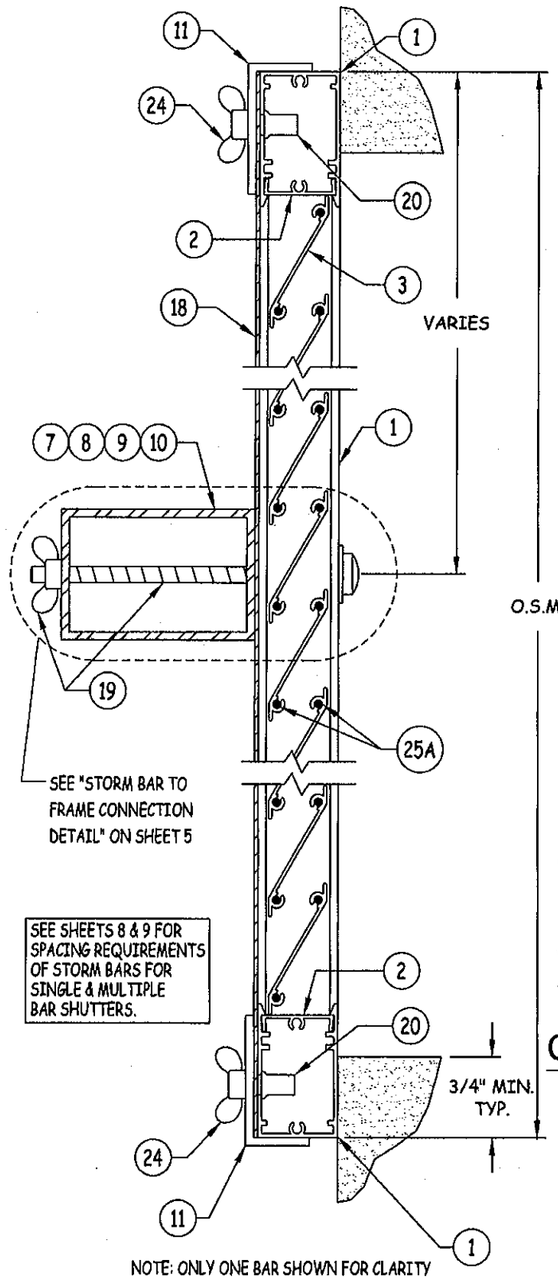

NOTE: ONLY ONE BAR SHOWN FOR CLARITY

A/4 **VERTICAL SECTION**

CONCRETE/MASONRY

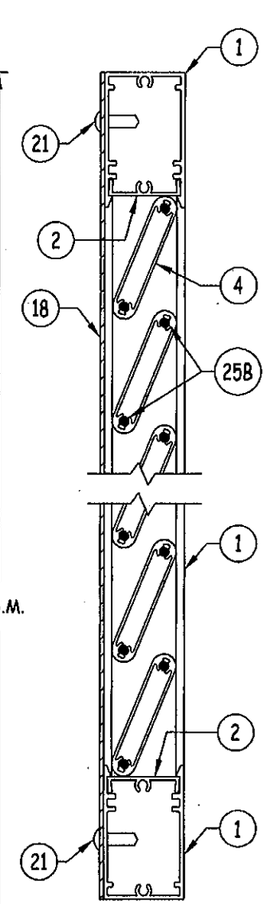

VERTICAL SECTION SHOWING OPTIONAL HOLLOW BLADE

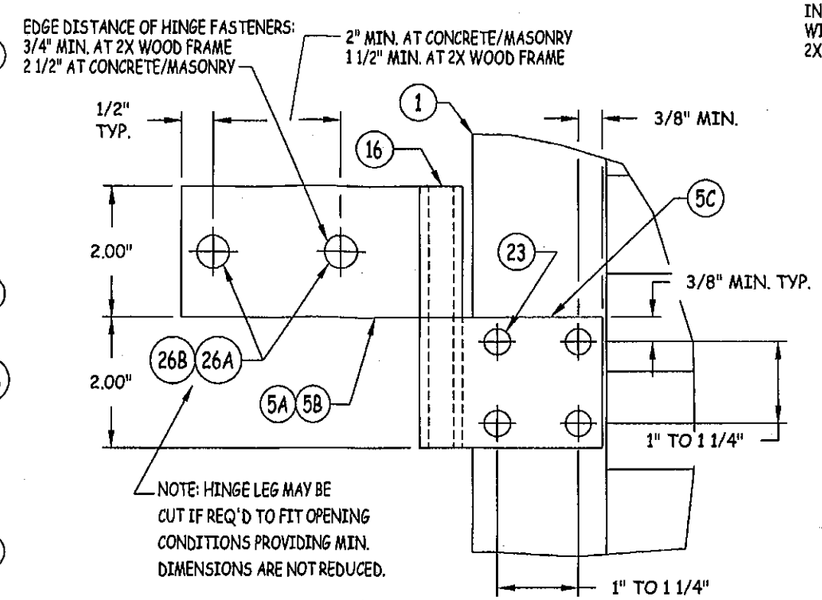

SIDE HINGE DETAIL

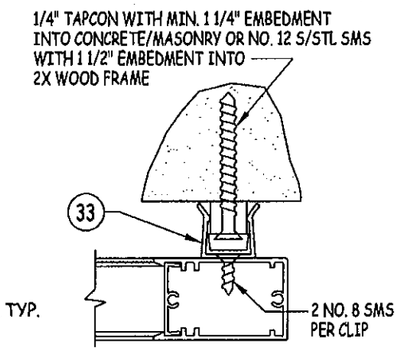

TYPICAL REQUIRED IN THE OPEN POSITION

WALL CLIP DETAIL

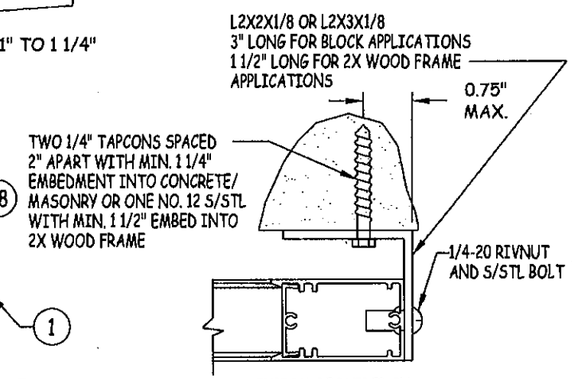

TYPICAL REQUIRED IN THE OPEN POSITION

OPTIONAL WALL CLIP DETAIL

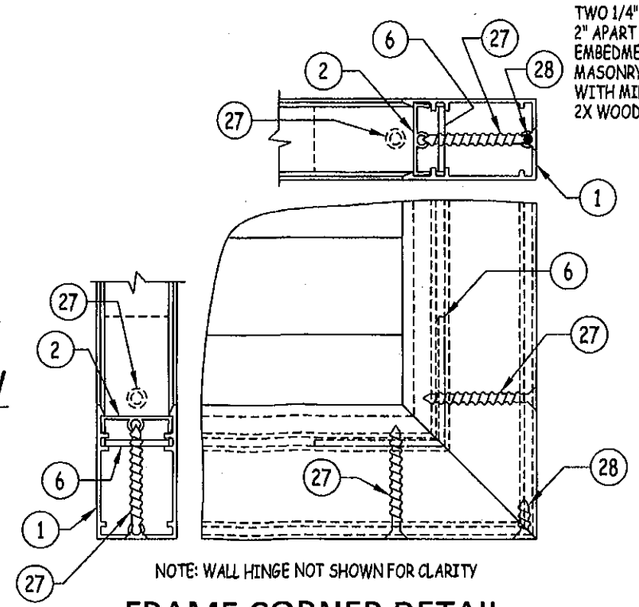

NOTE: WALL HINGE NOT SHOWN FOR CLARITY

FRAME CORNER DETAIL

PRODUCT RENEWED
as complying with the Florida Building Code
Acceptance No 11-0113.16
Expiration Date 05/06/2015
By [signature]
Miami Dade Product Control

PRODUCT REVISED
as complying with the Florida Building Code
Acceptance No 09-0706.11
Expiration Date 05/06/2010
By [signature]
Miami Dade Product Control Division

Gulfstream
GULFSTREAM ALUMINUM & SHUTTER CORPORATION
3001 S.E. GRAN PARK WAY
STUART, FLORIDA 34997
PH: (800) 244-4143 FX: (772) 287-9740

TITLE: COLONIAL SHUTTER VERTICAL SECTIONS

PREPARED BY:
CERTWORKS, LLC
127 W. FAIRBANKS AVE., STE. 438
WINTER PARK, FL 32789
PH: (407) 644-6957 FX: (407) 644-2366

REVISIONS

NO.	DESCRIPTION	BY	DATE

[signature] 1-25-10

KRISTINA S. CAUGHERTY
FLORIDA P. E. NO. 68455
127 W. FAIRBANKS AVE. STE. 438
WINTER PARK, FL 32789
FBPE CERT. OF AUTHORIZATION NO. 28520

DATE:	DWN BY:	CHK BY:	SCALE:
09.28.09	JLR	KSD	NTS

DWG #: GSA002

SHEET: 4 OF 9

1/25/2010 10:09 AM

p:\projects\gulfstream aluminum\md-p-09-0512.4 (colonial shutter)\dwgs\gsa002 colonial shutter (tml).dwg

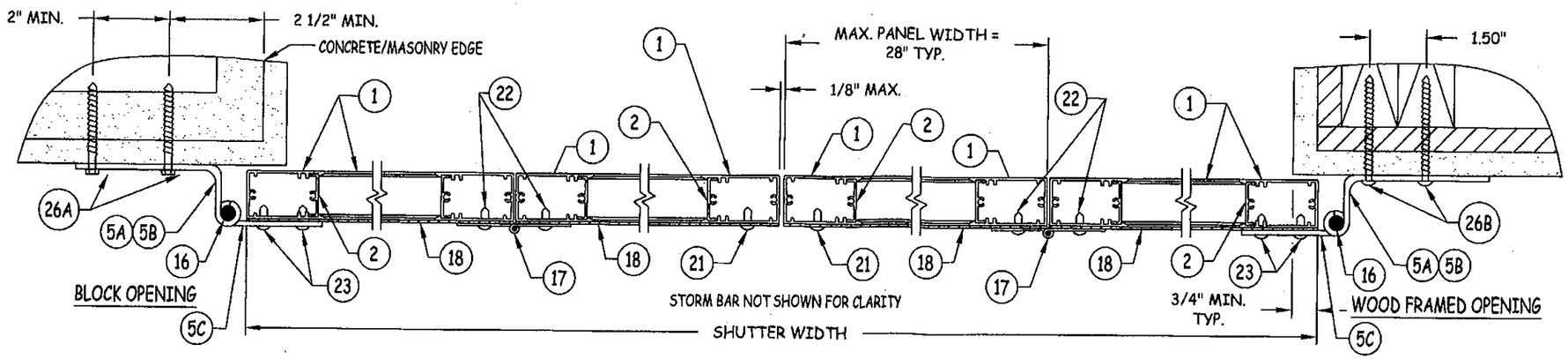

B/5 HORIZONTAL SECTION

CONCRETE/MASONRY OR 2X WOOD FRAME

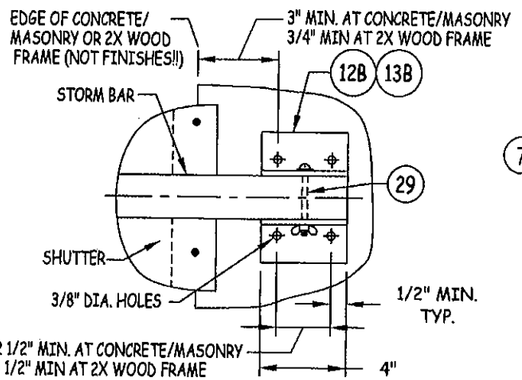

STORM BAR END CONNECTION "A"

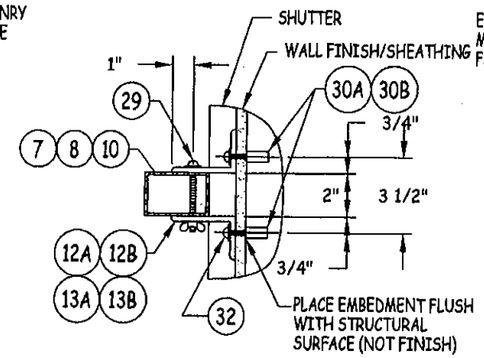

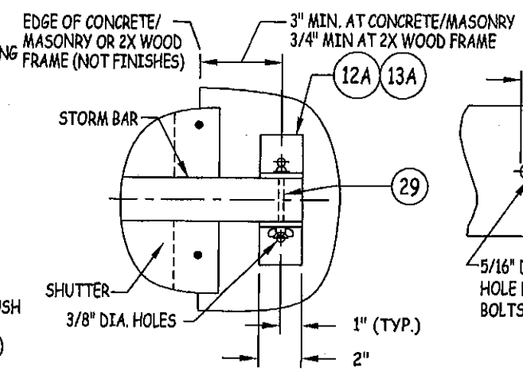

STORM BAR END CONNECTION "B"

SCALE: 2" = 1'-0"

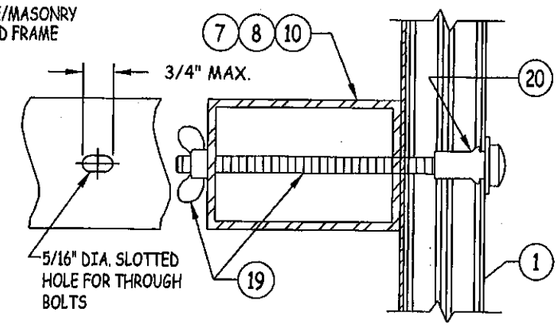

STORM BAR TO FRAME CONNECTION DETAIL

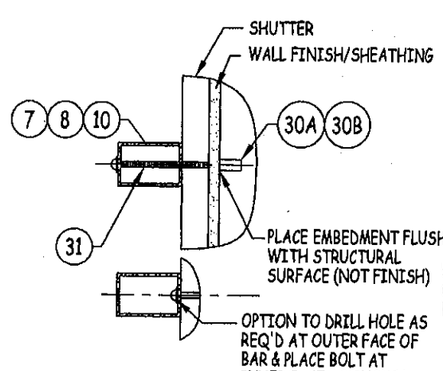

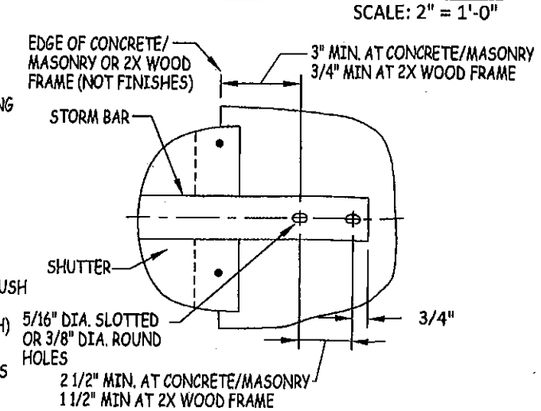

STORM BAR END CONNECTION "C"

NOTE: CONNECTION OF STORM BAR TO SHUTTER FRAMES IS NOT REQUIRED AT SINGLE BAR SHUTTERS.

PRODUCT RENEWED
as complying with the Florida Building Code
Acceptance No 11-0113.16
Expiration Date 05/06/2015
By Helen A. Melo
Miami Dade Product Control

PRODUCT REVISED
as complying with the Florida Building Code
Acceptance No 09-0706.11
Expiration Date 05/06/2010
By Helen A. Melo
Miami Dade Product Control Division

GULFSTREAM ALUMINUM & SHUTTER CORPORATION
3001 S.E. GRAN PARK WAY
STUART, FLORIDA 34997
PH: (800) 244-4143 FX: (772) 287-9740

TITLE: COLONIAL SHUTTER HORIZONTAL SECTIONS & DETAILS

PREPARED BY:
CERTWORKS, LLC
127 W. FAIRBANKS AVE., STE. 438
WINTER PARK, FL 32789
PH: (407) 644-6957 FX: (407) 644-2366

REVISIONS

NO.	DESCRIPTION	BY	DATE

1-25-10

KRISTINA S. DAUGHERTY
FLORIDA P.E. NO. 68455
127 W. FAIRBANKS AVE., STE. 438
WINTER PARK, FL 32789
FBPE CERT. OF AUTHORIZATION NO. 28520

DATE:	DWN BY:	CHK BY:	SCALE:
09.28.09	JLR	KSD	NTS

DWG #: GSA002

SHEET: 5 OF 9

1/25/2010 10:09 AM
p:\projects\gulfstream aluminum\md-p-09-0512.4 (colonial shutter)\dwgs\gsa002 colonial shutter (lm).dwg

1 SHUTTER FRAME
6063-T6 ALUMINUM
TYPICAL WALL
THICKNESS: .062"

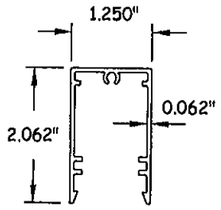

2 FRAME CAP
6063-T6 ALUMINUM
TYPICAL WALL
THICKNESS: .052"

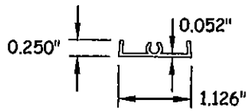

3 Z-BLADE
6063-T6 ALUMINUM
TYPICAL WALL
THICKNESS: .050"

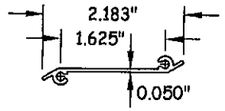

4 HOLLOW BLADE
6063-T6 ALUMINUM
TYPICAL WALL
THICKNESS: .040"

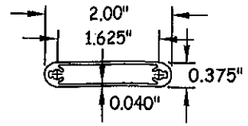

5A WALL HINGE 1
6005-T5 ALUMINUM
TYPICAL WALL
THICKNESS: .145"

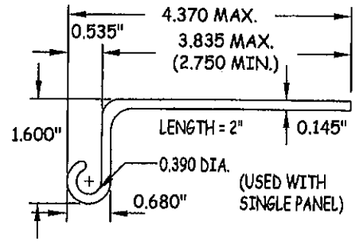

5B WALL HINGE 2
6005-T5 ALUMINUM
TYPICAL WALL
THICKNESS: .120"

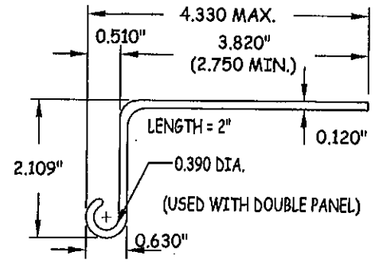

5C FLAT WALL HINGE
6005-T5 ALUMINUM
TYPICAL WALL
THICKNESS: .125"

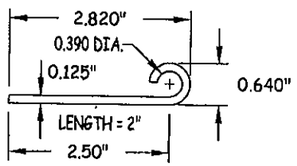

6 FRAME CORNER KEY
6063-T6 ALUMINUM
TYPICAL WALL
THICKNESS: .093"

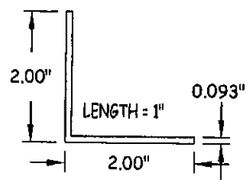

7 STORM BAR "A"
6061-T6 OR 6005-T5 ALUM.
TYPICAL WALL
THICKNESS: .125"

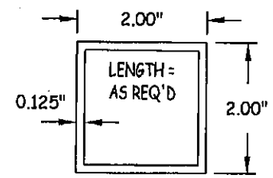

8 STORM BAR "B"
6061-T6 OR 6005-T5 ALUM.
TYPICAL WALL
THICKNESS: .125"

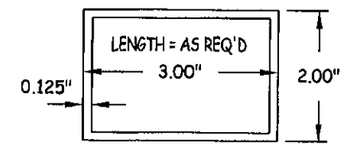

10 STORM BAR "D"
6061-T6 OR 6005-T5 ALUMINUM
TYPICAL WALL
THICKNESS: .125"

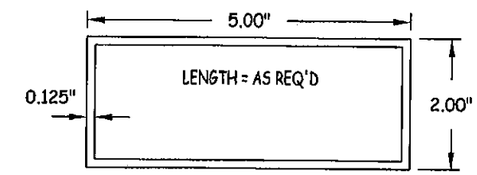

11 HURRICANE CLIP
6063-T5 ALUMINUM
TYPICAL WALL
THICKNESS: .125"

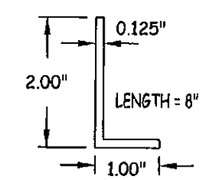

MATERIAL LIST

NO.	DESCRIPTION	NOTES	NO.	DESCRIPTION	NOTES
1	SHUTTER FRAME	6063-T6 ALUMINUM	17	SHUTTER PANEL HINGE	6063-T5 ALUMINUM; 6" LONG PIANO HINGE
2	FRAME CAP	6063-T6 ALUMINUM	18	0.050" THICK ALUMINUM HURRICANE SHEET	3003-H14 ALUMINUM; CUT TO FRAME SIZE
3	Z-BLADE	6063-T6 ALUMINUM	19	1/4" STL BOLT OR THREADED ROD W/WING NUT	NOT REQ'D AT SINGLE BAR SHUTTERS
4	HOLLOW BLADE	6063-T6 ALUMINUM	20	1/4" MOLLY JACK NUT OR 6063-T6 RIVNUT	FOR HURRICANE CLIP BOLTS & STORM BAR THROUGH BOLTS
5A	WALL HINGE TYPE 1	6005-T5 ALUMINUM; USED WITH SINGLE PANELS	21	3/16" 5052 ALUMINUM POP RIVETS	POSITIONED AT FRAME CORNERS & 6" MAX. O.C.
5B	WALL HINGE TYPE 2	6005-T5 ALUMINUM; USED WITH DOUBLE HINGED PANELS	22	NO. 6 X 5/8" S/STL SMS SCREWS	6 PER PIANO HINGE (3 PER HINGE LEAF)
5C	FLAT WALL HINGE	6005-T5 ALUMINUM; FASTENS TO SHUTTER FRAME	23	NO. 6 X 5/8" S/STL SMS SCREWS	4 PER WALL HINGE INTO SHUTTER FRAME
6	L2X2X0.093 FRAME CORNER KEY	6063-T6 ALUMINUM; PLACED AT EA. FRAME CORNER	24	1/4" X 1" STEEL BOLT OR WING BOLT	4 PER HURRICANE CLIP INTO SHUTTER RIVNUTS
7	TS2X2X1/8 STORM BAR	6061-T6 OR 6005-T5 ALUMINUM	25A	NO. 6 X 5/8" S/STL P.H. SMS	SECURES Z-BLADE END TO FRAME CAP (2 PER BLADE END)
8	TS3X2X1/8 STORM BAR	6061-T6 OR 6005-T5 ALUMINUM	25B	NO. 8 X 5/8" S/STL P.H. SMS	HOLLOW BLADE END TO FRAME CAP (2 PER BLADE END)
			26A	1/4" X MIN. 1 3/4" TAPCON BY ITW	2 PER WALL HINGE INTO BLOCK/CONCR. WALL MIN. 1 3/4"
10	TS5X2X1/8 STORM BAR	6061-T6 OR 6005-T5 ALUMINUM	26B	NO. 12 X MIN 2" S/STL SMS	2 PER WALL HINGE INTO WOOD FRAMING MIN. 1 1/2"
11	L2X1X1/8 HURRICANE CLIP 8" LONG	6063-T5 ALUMINUM; LOCKS SHUTTERS CLOSED	27	NO. 6 X 1 3/4" S/STL F.H. SMS	2 PER FRAME CORNER INTO CORNER KEY
12A	L3X2X1/4 STORM BAR END CONNECTOR	6063-T5 ALUMINUM; 2" LONG; USED WITH-OUT BUILD-OUT	28	NO. 6 X 5/8" S/STL F.H. SMS	1 PER FRAME CORNER INTO FRAME SCREW BOSS
12B	L3X2X1/4 STORM BAR END CONNECTOR	6063-T5 ALUMINUM; 4" LONG; USED WITH-OUT BUILD-OUT	29	1/4" X MIN. 3" STL. BOLT W/WING NUT (GRADE 5)	1 PER STORM BAR END THROUGH END ANGLES & BAR
13A	L4X2X1/4 STORM BAR END CONNECTOR	6063-T5 ALUMINUM; 2" LONG; USED WITH BUILD-OUT	30A	1/4-20 RAWL CAULK-IN	EMBED FULL ANCHOR BODY INTO BLOCK/CONCR.
13B	L4X2X1/4 STORM BAR END CONNECTOR	6063-T5 ALUMINUM; 4" LONG; USED WITH BUILD-OUT	30B	1/4-20 MALE OR FEMALE PANEL MATE	EMBED MIN. 1 5/8" INTO WOOD & 1 1/2" INTO BLOCK/CONC.
14	OPEN		31	1/4" STL BOLT OR THREADED ROD W/ WINGNUT	ANCHORS STORM BAR ENDS TO WALL ANCHORS
15	OPEN		32	1/4-20 STEEL BOLT	ANCHORS STORM BAR END CLIPS TO WALL ANCHORS
16	3/8" DIA. X 4" LONG HINGE PIN	6063-T5 ALUMINUM / 6061-T6	33	6063-T6 ALUMINUM OR NYLON WALL CLIP	ONE BETWEEN EACH WALL HINGE (31" O.C. MAX.)

PRODUCT RENEWED
as complying with the Florida
Building Code
Acceptance No 11-0113.16
Expiration Date 05/06/2015
By
Miami Dade Product Control

PRODUCT REVISED
as complying with the Florida
Building Code
Acceptance No 09-0706.11
Expiration Date 05/06/2010
By
Miami Dade Product Control
Division

Gulfstream
GULFSTREAM ALUMINUM &
SHUTTER CORPORATION
3001 S.E. GRAN PARK WAY
STUART, FLORIDA 34997
PH: (800) 244-4143 FX: (772) 287-9740

TITLE: COLONIAL SHUTTER
BILL OF MATERIALS
& COMPONENTS

PREPARED BY:
CERTWORKS, LLC
127 W. FAIRBANKS AVE., STE. 438
WINTER PARK, FL 32789
PH: (407) 644-6957 FX: (407) 644-2366

REVISIONS

NO.	DESCRIPTION	BY	DATE
A	REVISED PER MD COMMENTS	MS	01.20.10

1-25-10
KRISTINA S. DAUGHERTY
FLORIDA P. E. NO. 66455
127 W. FAIRBANKS AVE., STE. 438
WINTER PARK, FL 32789
FBPE CERT. OF AUTHORIZATION NO. 28520

DATE: 09.28.09
DWN BY: JLR
CHK BY: KSD
SCALE: NTS
DWG #: GSA002
SHEET: 6 OF 9

1/25/2010 10:09 AM
p:\projects\gulfstream aluminum\md-p-09-0512.4 (colonial shutter)\dwgs\gsa002 colonial shutter (bm).dwg

12A 12B STORM BAR END CONN.

6063-T5 ALUMINUM
TYPICAL WALL
THICKNESS: .250"

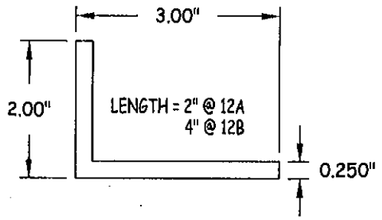

13A 13B STORM BAR END CONN.

6063-T5 ALUMINUM
TYPICAL WALL
THICKNESS: .250"

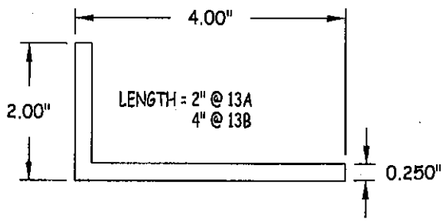

16 HINGE PIN

6063-T5 OR 6061-T6 ALUMINUM

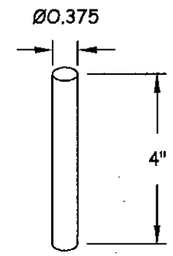

17 SHUTTER PANEL HINGE

6063-T5 ALUMINUM
TYPICAL WALL
THICKNESS: .063"

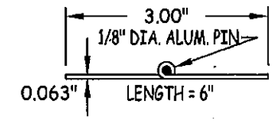

33 WALL CLIP

6063-T6 ALUMINUM OR NYLON
TYPICAL WALL THICKNESS
ALUMINUM "T": .035"
NYLON "T": .090"

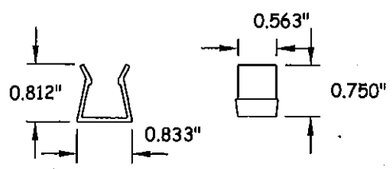

PRODUCT RENEWED
as complying with the Florida
Building Code
Acceptance No 11-0113.16
Expiration Date 05/06/2015
By Helena A. Melo
Miami Dade Product Control

PRODUCT REVISED
as complying with the Florida
Building Code
Acceptance No 09-0706.11
Expiration Date 05/06/2010
By Helena A. Melo
Miami Dade Product Control
Division

Gulfstream

GULFSTREAM ALUMINUM &
SHUTTER CORPORATION
3001 S.E. GRAN PARK WAY
STUART, FLORIDA 34997
PH: (800) 244-4143 FX: (772) 287-9740

TITLE: COLONIAL SHUTTER COMPONENTS

PREPARED BY:
CERTWORKS, LLC
127 W. FAIRBANKS AVE., STE. 438
WINTER PARK, FL 32789
PH: (407) 644-6957 FX: (407) 644-2366

REVISIONS

NO.	DESCRIPTION	BY	DATE

1-25-10

VIRGINIA S. DAUGHERTY
FLORIDA P.E. NO. 58455
127 W. FAIRBANKS AVE. STE. 438
WINTER PARK, FL 32789
REPE CERT. OF AUTHORIZATION NO. 28262

DATE:	DWN BY:	CHK BY:	SCALE:
09.28.09	JLR	KSD	NTS

DWG #: GSA002

SHEET: 7 OF 9

1/25/2010 10:09 AM
p:\projects\gulfstream aluminum\acd-p-09-0912.4 (colonial shutter)\dwgs\gsa002 colonial shutter (bm).dwg

PRESSURE LOAD TABLE FOR STORM BARS & BAR END CONNECTIONS

Shutter Width (in)	Bar Spacing (in)	ALLOWABLE PRESSURES (PSF) AS CONTROLLED BY BARS			ALLOWABLE PRESSURES (PSF) AS CONTROLLED BY CONNECTIONS		
					Connection "A"	Connection "B" & "C"	
		TS2x2x1/8	TS3x2x1/8	TS5x2x1/8	Wood/Concrete/ Masonry	Wood	Concrete/ Masonry
36	48	80	80	80	80	80	62
	54	80	80	80	80	80	55
	60	80	80	80	80	78	50
	66	76	80	80	80	71	45
	72	69	80	80	80	65	41
	74	68	80	80	80	63	40
42	42	80	80	80	80	80	61
	48	80	80	80	80	80	53
	54	72	80	80	80	75	47
	60	65	80	80	80	67	43
	66	59	80	80	80	61	39
	72	54	80	80	73	56	35
	74	53	80	80	71	54	35
48	36	80	80	80	80	80	62
	42	75	80	80	80	80	53
	48	65	80	80	80	73	47
	54	58	80	80	80	65	41
	60	52	80	80	77	59	37
	66	48	80	80	70	53	34
	72	44	79	80	64	49	31
	74	42	76	80	62	48	30
54	30	80	80	80	80	80	66
	36	72	80	80	80	80	55
	42	61	80	80	80	75	47
	48	54	80	80	80	65	41
	54	48	80	80	76	58	37
	60	43	77	80	69	52	33
	66	39	70	80	62	47	30
	72	36	65	80	57	44	28
	74	35	63	80	56	42	27
60	24	80	80	80	80	80	75
	30	72	80	80	80	80	60
	36	60	80	80	80	78	50
	42	51	80	80	80	67	43
	48	45	80	80	77	59	37
	54	40	72	80	69	52	33
	60	36	65	80	62	47	30
	66	33	59	80	56	43	27
	72	30	54	80	51	39	25
	74	29	53	80	50	38	24
66	24	67	80	80	80	80	68
	30	54	80	80	80	80	54
	36	45	80	80	80	71	45
	42	39	78	80	80	61	39
	48	34	69	80	70	53	34
	54	30	61	80	62	47	30
	60	27	55	80	56	43	27
	66	-	50	80	51	39	25
	72	-	46	80	47	36	23
	74	-	45	80	45	35	22

PRESSURE LOAD TABLE FOR STORM BARS & BAR END CONNECTIONS

Shutter Width (in)	Bar Spacing (in)	ALLOWABLE PRESSURES (PSF) AS CONTROLLED BY BARS			ALLOWABLE PRESSURES (PSF) AS CONTROLLED BY CONNECTIONS		
					Connection "A"	Connection "B" & "C"	
		TS2x2x1/8	TS3x2x1/8	TS5x2x1/8	Wood/Concrete/ Masonry	Wood	Concrete/ Masonry
72	24	50	80	80	80	80	62
	30	40	80	80	80	78	50
	36	33	79	80	80	65	41
	42	28	67	80	73	56	35
	48	-	59	80	64	49	31
	54	-	52	80	57	44	28
	60	-	47	80	51	39	25
	66	-	43	80	47	36	23
	72	-	39	80	43	33	21
	74	-	38	80	42	32	20
78	24	-	80	80	80	80	57
	30	-	80	80	80	72	46
	36	-	68	80	79	60	38
	42	-	58	80	68	52	33
	48	-	51	80	59	45	29
	54	-	45	80	53	40	25
	60	-	41	80	47	36	23
	66	-	37	80	43	33	21
	72	-	34	74	40	30	19
	74	-	33	72	38	29	19
84	24	-	78	80	80	80	53
	30	-	62	80	80	67	43
	36	-	52	80	73	56	35
	42	-	44	80	63	48	30
	48	-	39	80	55	42	27
	54	-	35	80	49	37	24
	60	-	31	78	44	34	21
	66	-	-	71	40	31	19
	72	-	-	65	37	28	18
	74	-	-	63	36	27	17
90	24	-	61	80	80	78	50
	30	-	49	80	80	63	40
	36	-	41	80	69	52	33
	42	-	35	80	59	45	28
	48	-	30	80	51	39	25
	54	-	-	77	46	35	22
	60	-	-	69	41	31	20
	66	-	-	63	37	28	18
	72	-	-	58	34	26	17
	74	-	-	56	33	25	16

LOAD TABLE CONTINUED ON SHEET 9

NOTE: SEE INSTRUCTIONS ON SHEET 9 FOR USE OF ALL LOAD TABLES!

1. ALL PRESSURES ARE FOR BOTH POSITIVE & NEGATIVE AND ARE PSF.
2. PRESSURES ARE LIMITED TO MAX. 80 PSF AS CONTROLLED BY TESTING.
3. REF. SHEET 5 FOR CONNECTION TYPES.
4. THE SHUTTERS MUST BE POSITIONED MINIMUM 2.125" FROM THE GLASS THEY PROTECT.

* MAXIMUM SHUTTER HEIGHT FOR A SINGLE STORM BAR SHUTTER IS 74".
MAXIMUM BAR SPACING FOR A MULTI STORM BAR SHUTTER IS 48".

PRODUCT RENEWED
as complying with the Florida Building Code
Acceptance No 11-0113.16
Expiration Date 05/06/2015
By
Miami Dade Product Control

PRODUCT REVISED
as complying with the Florida Building Code
Acceptance No 09-0706.11
Expiration Date 05/06/2010
By
Miami Dade Product Control Division

GULFSTREAM ALUMINUM & SHUTTER CORPORATION
3001 S.E. GRAN PARK WAY
STUART, FLORIDA 34997
PH: (800) 244-4143 FX: (772) 287-9740

TITLE: COLONIAL SHUTTER PRESSURE LOAD TABLES

PREPARED BY:
CERTWORKS, LLC
127 W. FAIRBANKS AVE., STE. 438
WINTER PARK, FL 32789
PH: (407) 644-6957 FX: (407) 644-2366

REVISIONS

NO.	DESCRIPTION	BY	DATE
A	REVISED PER MD COMMENTS	MS	01.20.10

1-25-10

KRISTINA S. DAUGHERTY
FLORIDA P. E. NO. 58455
127 W. FAIRBANKS AVE. STE. 438
WINTER PARK, FL 32789
FBPE CERT. OF AUTHORIZATION NO. 28580

DATE: 09.28.09
DWN BY: JLR
CHK BY: KSD
SCALE: NTS
DWG #: GSA002
SHEET: 8 OF 9

1/28/2010 10:09 AM
p:\projects\gulfstream aluminum\md-s-09-0512.4 (colonial shutter)\dwgs\gsa002 colonial shutter (bm).dwg

PRESSURE LOAD TABLE FOR STORM BARS & BAR END CONNECTIONS							
Shutter Width (in)	Bar Spacing (in)	ALLOWABLE PRESSURES (PSF) AS CONTROLLED BY BARS			ALLOWABLE PRESSURES (PSF) AS CONTROLLED BY CONNECTIONS		
					Connection "A"	Connection "B" & "C"	
		TS2x2x1/8	TS3x2x1/8	TS5x2x1/8	Wood/Concrete/ Masonry	Wood	Concrete/ Masonry
96	24	-	48	80	80	73	47
	30	-	39	80	77	59	37
	36	-	32	80	64	49	31
	42	-	-	80	55	42	27
	48	-	-	77	48	37	23
	54	-	-	68	43	33	21
	60	-	-	62	39	29	19
	66	-	-	56	35	27	17
	72	-	-	51	32	24	16
	74	-	-	50	31	24	15
102	24	-	39	80	80	69	44
	30	-	31	80	73	55	35
	36	-	-	80	60	46	29
	42	-	-	79	52	39	25
	48	-	-	69	45	35	22
	54	-	-	61	40	31	19
	60	-	-	55	36	28	18
	66	-	-	50	33	25	16
	72	-	-	46	30	23	15
	74	-	-	45	29	22	14
108	24	-	31	80	80	65	41
	30	-	-	80	69	52	33
	36	-	-	76	57	44	28
	42	-	-	65	49	37	24
	48	-	-	57	43	33	21
	54	-	-	51	38	29	18
	60	-	-	46	34	26	17
	66	-	-	41	31	24	15
	72	-	-	38	29	22	14
	74	-	-	37	28	21	13
112	24	-	-	80	80	63	40
	30	-	-	80	66	50	32
	36	-	-	66	55	42	27
	42	-	-	57	47	36	23
	48	-	-	50	41	31	20
	54	-	-	44	37	28	18
	60	-	-	40	33	25	16
	66	-	-	36	30	23	15
	72	-	-	33	28	21	13
	74	-	-	32	27	20	13

LOAD TABLE INSTRUCTIONS:

1. DETERMINE THE SIZE OF THE SHUTTER.
2. DETERMINE WHAT THE REQUIRED DESIGN POSITIVE & NEGATIVE WIND LOADS ARE FOR THE SHUTTER.
3. IF THE SHUTTER HEIGHT IS 74" OR LESS, GO TO THE PRESSURE TABLE ON SHEET 3. IF THE REQUIRED LOADS ARE LESS THAN OR EQUAL TO THOSE IN THE TABLE, ONLY ONE BAR IS REQUIRED (USE THE PRESSURE TABLE ON SHEET 3). IF NOT, MORE THAN ONE BAR IS REQUIRED.
4. IF THE SHUTTER HEIGHT IS GREATER THAN 74", DO NOT USE THE TABLE ON SHEET 3 & GO TO THE STORM BAR LOAD TABLES ON SHEETS 8 & 9.
5. IF ONLY ONE BAR IS REQUIRED, GO TO THE STORM BAR LOAD TABLES ON SHEETS 8 & 9. FIND THE APPLICABLE SHUTTER WIDTH IN THE 1ST COLUMN & SHUTTER HEIGHT IN THE 2ND COLUMN. GO ACROSS THE STORM BAR COLUMNS UNTIL YOU HAVE A BAR WHICH MEETS THE REQUIRED PRESSURE. THEN GO ACROSS THE CONNECTION COLUMNS UNTIL YOU HAVE A CONNECTION THAT MEETS THE REQUIRED PRESSURE. USE THAT BAR & THAT CONNECTION. NOTE THAT IF YOU DECIDE THAT THE BAR &/OR CONNECTION IS TOO LARGE FOR YOUR LIKING, ADD A BAR & GO TO INSTRUCTION NUMBER 6 BELOW.
6. IF MORE THAN ONE BAR IS REQUIRED, GO TO THE STORM BAR LOAD TABLES ON SHEETS 8 & 9. FIND THE APPLICABLE SHUTTER WIDTH IN THE 1ST COLUMN & STORM BAR SPACING IN THE 2ND COLUMN. GO ACROSS THE STORM BAR COLUMNS UNTIL YOU HAVE A BAR WHICH MEETS THE REQUIRED PRESSURE. THEN GO ACROSS THE CONNECTION COLUMNS UNTIL YOU HAVE A CONNECTION THAT MEETS THE REQUIRED PRESSURE. USE THAT BAR & THAT CONNECTION. NOTE THAT IF YOU DECIDE THAT THE BAR &/OR CONNECTION IS TOO LARGE FOR YOUR LIKING, ADD ANOTHER BAR & START AGAIN WITH INSTRUCTION NUMBER 6.

NOTE THAT WHEN MORE THAN ONE BAR IS USED WITH ONE SHUTTER, THE MAXIMUM BAR SPACING MAY NOT EXCEED 48".

PRODUCT RENEWED
as complying with the Florida
Building Code
Acceptance No 11-0113.16
Expiration Date 05/06/2015
By
Miami Dade Product Control

PRODUCT REVISED
as complying with the Florida
Building Code
Acceptance No 09-0706.11
Expiration Date 05/06/2010
By
Miami Dade Product Control
Division

Gulfstream

GULFSTREAM ALUMINUM &
SHUTTER CORPORATION
3001 S.E. GRAN PARK WAY
STUART, FLORIDA 34997
PH: (800) 244-4143 FX: (772) 287-9740

TITLE: COLONIAL SHUTTER PRESSURE LOAD TABLES

PREPARED BY:
CERTWORKS, LLC
127 W. FAIRBANKS AVE., STE. 438
WINTER PARK, FL 32789
PH: (407) 644-6957 FX: (407) 644-2366

REVISIONS

NO.	DESCRIPTION	BY	DATE

1-25-10

KRISTINA S. DALIGHETY
FLORIDA P.E. NO. 68485
127 W. FAIRBANKS AVE., STE. 438
WINTER PARK, FL 32789
REPR. CERT. OF AUTHORIZATION NO. 28500

DATE: 09.28.09
DWN BY: JLR
CHK BY: KSD
SCALE: NTS
DWG #: GSA002
SHEET: 9 OF 9

1/25/2010 10:09 AM
p:\projects\gulfstream aluminum\wd-p-09-0812.4 (colonial shutter)\dwgs\gsa002 colonial shutter (list).dwg