MIAMI-DADE COUNTY
BUILDING AND NEIGHBORHOOD COMPLIANCE DEPARTMENT (BNC)
BOARD AND CODE ADMINISTRATION DIVISION

MIAMI-DADE COUNTY
PRODUCT CONTROL SECTION
11805 SW 26 Street, Room 208
Miami, Florida 33175-2474
T (786) 315-2590 F (786) 315-2599
www.miamidade.gov/building/

NOTICE OF ACCEPTANCE (NOA)

Hurricane Manufacturing Corporation
11850 Miramar Parkway
Miramar, FL 33025

SCOPE:

This NOA is being issued under the applicable rules and regulations governing the use of construction materials. The documentation submitted has been reviewed by Miami-Dade County Product Control Section and accepted by the Board of Rules and Appeals (BORA) to be used in Miami Dade County and other areas where allowed by the Authority Having Jurisdiction (AHJ).

This NOA shall not be valid after the expiration date stated below. The Miami-Dade County Product Control Section (In Miami Dade County) and/or the AHJ (in areas other than Miami Dade County) reserve the right to have this product or material tested for quality assurance purposes. If this product or material fails to perform in the accepted manner, the manufacturer will incur the expense of such testing and the AHJ may immediately revoke, modify, or suspend the use of such product or material within their jurisdiction. BORA reserves the right to revoke this acceptance, if it is determined by Miami-Dade County Product Control Section that this product or material fails to meet the requirements of the applicable building code. This product is approved as described herein, and has been designed to comply with the Florida Building Code, including the High Velocity Hurricane Zone.

DESCRIPTION: Series "HMC 1000" Aluminum Storefront System – L. M. I.

APPROVAL DOCUMENT: Drawing No. **11-004**, titled "HMC 1000 LM Series Aluminum Storefront", sheets 1 through 12 of 12, dated 01/11/11, prepared by EngCo, Inc., signed and sealed by Pedro De Figueiredo, P.E., bearing the Miami-Dade County Product Control Revision stamp with the Notice of Acceptance number and expiration date by the Miami-Dade County Product Control Section.

MISSILE IMPACT RATING: Large and Small Missile Impact Resistant

LABELING: Each unit shall bear a permanent label with the manufacturer's name or logo, city, state and following statement: "Miami-Dade County Product Control Approved", unless otherwise noted herein.

RENEWAL of this NOA shall be considered after a renewal application has been filed and there has been no change in the applicable building code negatively affecting the performance of this product.

TERMINATION of this NOA will occur after the expiration date or if there has been a revision or change in the materials, use, and/or manufacture of the product or process. Misuse of this NOA as an endorsement of any product, for sales, advertising or any other purposes shall automatically terminate this NOA. Failure to comply with any section of this NOA shall be cause for termination and removal of NOA.

ADVERTISEMENT: The NOA number preceded by the words Miami-Dade County, Florida, and followed by the expiration date may be displayed in advertising literature. If any portion of the NOA is displayed, then it shall be done in its entirety.

INSPECTION: A copy of this entire NOA shall be provided to the user by the manufacturer or its distributors and shall be available for inspection at the job site at the request of the Building Official.

This NOA **revises NOA # 10-0224.04** and consists of this page 1 and evidence pages E-1, E-2 and E-3, as well as approval document mentioned above.

The submitted documentation was reviewed by **Manuel Perez, P.E.**

MIAMI-DADE COUNTY APPROVED

Hurricane Manufacturing Corporation

NOTICE OF ACCEPTANCE: EVIDENCE SUBMITTED

A. DRAWINGS

1. Manufacturer's die drawings and sections.
2. Drawing No **11-004**, Sheets 1 through 12 of 12, titled "HMC 1000 LM Series Aluminum Storefront", dated 01/11/11, prepared by EngCo, Inc., signed and sealed by Pedro De Figueiredo, P.E.

B. TESTS

1. Test reports on: 1) Large Missile Impact Test per, 201-94
   2) Cyclic Wind Pressure Loading per FBC, TAS 203-94
   3) Safety Performance Test, (class A) per ANSI Z97.1

   along with marked-up drawings and installation diagram of an aluminum storefront system w/insulated laminated glass, prepared by Hurricane Test Laboratory, LLC, Test Report No. **HTL-0314-0901.10, specimens #A1, #A2, #A3 and #D1,** dated 01/10/11, signed and sealed by Vinu J. Abraham, P.E.
2. Test reports on: 1) Large Missile Impact Test per, 201-94
   2) Cyclic Wind Pressure Loading per FBC, TAS 203-94

   along with marked-up drawings and installation diagram of an aluminum fixed window, prepared by Hurricane Test Laboratory, LLC, Test Report No. **HTL-0314-1113.06, specimen #1,** dated 7/13/07, signed and sealed by Vinu J. Abraham, P.E.

   (Submitted under previous NOA #05-0105.01)
3. Test reports on: 1) Air Infiltration Test, per TAS 202-94
   2) Uniform Static Air Pressure Test, Loading per TAS 202-94
   3) Water Resistance Test, per TAS 202-94

   along with marked-up drawings and installation diagram of an aluminum fixed window, prepared by Hurricane Test Laboratory, LLC, Test Report No. **HTL-0314-1113.06, specimens #1, #2 and #3,** dated 11/29/06-04/10/07, signed and sealed by Vinu J. Abraham, P.E.

   (Submitted under previous NOA #05-0105.01)
4. Test reports on: 1) Air Infiltration Test, per TAS 202-94
   2) Uniform Static Air Pressure Test, Loading per TAS 202-94
   3) Water Resistance Test, per TAS 202-94
   4) Large Missile Impact Test per, 201-94
   5) Cyclic Wind Pressure Loading per FBC, TAS 203-94

   along with marked-up drawings and installation diagram of an aluminum fixed window, prepared by Hurricane Test Laboratory, LLC, Test Report No. **HTL-0314-1112.04**, dated 11/22/04-03/02/05, signed and sealed by Vinu J. Abraham, P.E.

   (Submitted under previous NOA# 05-0810.03)

Manuel Perez, P.E.
Product Control Examiner
NOA No. 11-0118.03
Expiration Date: October 20, 2015
Approval Date: March 10, 2011

B. TESTS (CONTINUED)

5. Test reports on: 1) Air Infiltration Test, per TAS 202-94
2) Uniform Static Air Pressure Test, Loading per TAS 202-94
3) Water Resistance Test, per TAS 202-94
4) Large Missile Impact Test per, 201-94
5) Cyclic Wind Pressure Loading per FBC, TAS 203-94

along with marked-up drawings and installation diagram of a aluminum fixed window, prepared by Hurricane Test Laboratory, LLC, Test Report No. **HTL-0314-0405.05**, dated 04/15-21/05, signed and sealed by Vinu J. Abraham, P.E. ***(Submitted under previous NOA# 05-0810.03)***

C. CALCULATIONS

1. Anchor verification calculations and structural analysis, complying with FBC-2007, prepared by EngCo, Inc., dated 01/21/10 and revised on 05/17/10 and 1/11/11, signed and sealed by Pedro De Figueiredo, P.E.

2. Glazing complies with ASTM E1300-04.

D. QUALITY ASSURANCE

1. Miami-Dade Building and Neighborhood Compliance Department (BNC).

E. MATERIAL CERTIFICATIONS

1. Notice of Acceptance No. **06-0216.06** issued to **Solutia, Inc.** for their "**Saflex IIIG Clear or colored Interlayer**" dated 05/04/06, expiring on 05/21/11.

2. Notice of Acceptance No. **08-0520.08** issued to **Solutia, Inc.** for their "**Vanceva Composites Glass Interlayer**" dated 07/17/08, expiring on 12/11/13.

3. Notice of Acceptance No. **08-0508.02** issued to **Viracon, Inc.** for their **"StormGuard Glass Interlayer"**, dated 07/03/08, expiring on 04/14/13.

4. Notice of Acceptance No. **10-0201.01** issued to **Viracon, Inc.** for their "**Viracon HRG-2 Glass Interlayer**", dated 03/24/10, expiring on 02/12/14.

Manuel Perez, P.E.
Product Control Examiner
NOA No. 11-0118.03
Expiration Date: October 20, 2015
Approval Date: March 10, 2011

F. STATEMENTS

1. Statement letter of conformance and no financial interest, dated May 17, 2010, signed and sealed by Pedro De Figueiredo, P.E.
2. Laboratory compliance letter for Test Report No. **HTL-0314-1113-06, specimen #1**, issued by Hurricane Test Laboratory, LLC, dated 11/14/07, signed and sealed by Vinu J. Abraham, P.E.
3. Laboratory compliance letter for Test Report No. **HTL-0314-1113-06, specimens #1, #2 and #3**, issued by Hurricane Test Laboratory, LLC, dated 07/26/07, signed and sealed by Vinu J. Abraham, P.E.
4. Laboratory compliance letter for Test Reports No. **HTL-0314-1112-04** and **HTL-0314-0405-05**, issued by Hurricane Test Laboratory, LLC, dated 07/26/05, signed and sealed by Vinu J. Abraham, P.E.
5. Laboratory compliance letter for Test Reports No. **HTL-0314-0901-10**, issued by Hurricane Test Laboratory, LLC, dated 01/07/11, signed and sealed by Vinu J. Abraham, P.E.

G. OTHER

1. Notice of Acceptance No. **10-0224.04**, issued to Hurricane Manufacturing Corp. for their Series "HMC 1000" Aluminum Storefront System – L.M.I., approved on 08/04/10 and expiring on 10/20/15.

Manuel Perez, P.E.
Product Control Examiner
NOA No. 11-0118.03
Expiration Date: October 20, 2015
Approval Date: March 10, 2011

TABLE OF CONTENTS:

SHEET	DESCRIPTION
1	GENERAL NOTES, TABLE OF CONTENTS, WINDOW CONFIGURATIONS
2	TYPE I - SINGLE PANEL UNITS
3	TYPE II - COMBINED SINGLE PANEL UNITS
4	TYPE III - MULTIPLE PANEL UNITS
5	GLAZING CONFIGURATIONS AND DESIGNED LOADS
6	SECTIONS DETAILS
7	FRAMING ANCHORAGE OPTIONS
8	TYPE I - ANCHORAGE DESIGN
9	TYPE II - ANCHORAGE DESIGN
10	TYPE III - ANCHORAGE DESIGN
11	WINDOW COMPONENTS, FRAME ASSEMBLY
12	FRAME ASSEMBLY

GENERAL NOTES:

1- CODE: THIS PRODUCT HAS BEEN TESTED AND DESIGNED IN ACCORDANCE WITH THE FLORIDA BUILDING CODE 2007 EDITION - (HIGH VELOCITY SECTION) TAS 201 (LARGE MISSILE), 202, 203 AND ASTM E1300, ASTME 1886, ASTM E1996 (MISSILE LEVEL D & E).

2- DEFINITION: THIS PRODUCT IS AN ALUMINUM FIXED TYPE WINDOW WITH LARGE MISSILE IMPACT RESISTANT LAMINATED GLASS. HURRICANE IMPACT PROTECTION IS NOT REQUIRED.

3- POSTING:
"HMC-1000 LM SERIES - LARGE MISSILE IMPACT
HURRICANE MANUFACTURING CORPORATION INC.
MIRAMAR - BROWARD COUNTY - FLORIDA
DADE COUNTY PRODUCT CONTROL APPROVED"

4- DESIGN LOADS: LOADS MUST BE CALCULATED BY A PROFESSIONAL ARCHITECT OR ENGINEER FOR EACH SPECIFIC PROJECT. THE CALCULATED DESIGNED PRESSURE MUST NOT EXCEED THE ALLOWABLE APPROVED PRESSURE SPECIFIED IN THIS APPROVAL.

5- MATERIAL: ALL ALUMINUM PARTS TO BE 6063-T6 OR 6005-T5 ALLOYS AS INDICATED AND GLAZING TO BE LAMINATED IMPACT RESISTANT GLASS AS SPECIFIED ON THIS APPROVAL.

6- FASTENERS: ASSEMBLY SCREWS AND ANCHORS SHALL BE AS SPECIFIED IN THIS CURRENT SET OF DRAWINGS.

7- USE: IT SHALL BE THE RESPONSIBILITY OF THE CONTRACTOR, ARCHITECT OR ENGINEER OF RECORD TO VERIFY THE FOLLOWING:
7.1- THE STABILITY OF THE STRUCTURE WHERE THE UNIT IS TO BE ATTACHED INSURING PROPER ANCHORAGE.
7.2- THE SITE SPECIFIC PROJECT CRITERIA, SUCH AS BUT NOT LIMITED TO, LOCAL CODE REQUIREMENTS, DESIGNED PRESSURES ETC.
7.3- THAT THIS APPROVAL IS ADEQUATE TO THE SPECIFIC PROJECT.

8- 33 1/3% INCREASE IN ALLOWABLE LOADS HAVE NOT BEEN USED IN THE DESIGN OF THE ANCHORS FOR THIS PRODUCT APPROVAL, HOWEVER, WOOD ANCHORS WITH 1.6 INCREASE FOR WIND LOAD DURATION HAVE BEEN USED.

9- DISSIMILAR MATERIALS: MATERIALS, INCLUDING BUT NOT LIMITED TO STEEL, THAT COME IN CONTACT WITH OTHER DISSIMILAR MATERIALS SHALL MEET THE REQUIREMENTS OF 2007 FLORIDA BUILDING CODE.

WINDOW CONFIGURATIONS

TYPE I
SINGLE PANEL UNITS
SHEET 2

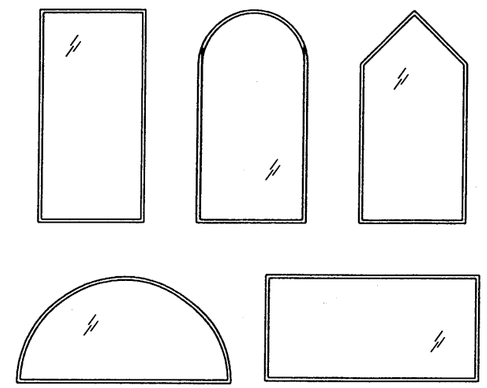

TYPE II
COMBINED SINGLE PANEL UNITS
SHEET 3

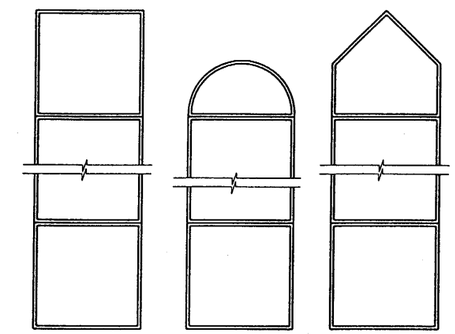

TYPE III
MULTIPLE PANEL UNITS
SHEET 4

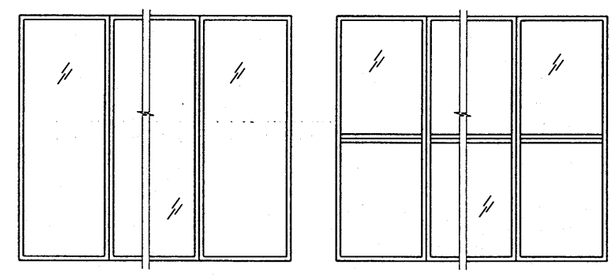

USER INSTRUCTIONS:

1- DETERMINE DESIGN WIND LOAD PRESSURES AS PER ITEM 4 OF GENERAL NOTES.

2- BASED ON THE WINDOW TYPE, CONFIGURATION AND SIZE VERIFY THE FRAMING CAPACITY BY USING THE PROPER TABLES ON SHEETS 2, 3 OR 4.

3- BASED ON TYPE OF GLASS CHECK GLAZING CAPACITY BY USING TABLE 5 ON SHEET 5. GLASS CAPACITY MUST BE GREATER THAN OR EQUAL TO THE CALCULATED PRESSURE.

4- FUNCTION OF THE WINDOW TYPE USE SHEETS 7, 8, 9 OR 10 TO SELECT AND DESIGN THE PROPER FRAMING ANCHORAGE.

MAXIMUM PRESSURE MUST NOT EXCEED 130 PSF
MAXIMUM GLAZING DLO AREA MUST NOT EXCEED: 45.6 SQF
LARGE & SMALL MISSILE IMPACT RATED

HMC
HURRICANE MANUFACTURING CORPORATION
11850 MIRAMAR PARKWAY
MIRAMAR - FL. - 33025
Phone: (954) 392-7933
Fax: (954) 392-7356

PRODUCT:
HMC 1000
LM SERIES
ALUMINUM STOREFRONT

Engineering:
EngCo Inc.
CA 8116
5595 Orange Dr. 201
Davie, FL 33314
ENGCO@AOL.COM

PEDRO W. CABRERA LICENSE No. 52609 STATE OF FLORIDA PROFESSIONAL ENGINEER
JAN 11 2011
Engineer Seal
Pedro W. Figueiredo
PE 52609

DRAFTING:
PK DRAFTING & MORE

MIAMI-DADE BCCO:

PRODUCT REVISED
as complying with the Florida Building Code
Acceptance No 11-0118.03
Expiration Date Oct. 20, 2015
By Manuel Perez
Miami Dade Product Control

Date: 01/11/11
Scale: NA
Design by: PPMF

Drawing Number
11-004

SHEET
1 of 12

TYPE I - SINGLE PANEL UNITS

TABLE 1
ALLOWABLE MODULE PRESSURE
FOR SINGLE PANELS

A (IN)	B (IN)	GLAZING TYPE				
		A2	A3	A5	B3	C1
48	48	60	130	130	130	130
	60	60	130	130	130	130
	72	60	130	130	130	130
	84	60	130	130	130	130
	96	60	130	130	130	130
	108	60	130	130	130	130
	120	60	129	129	128	130
	144	60	118	118	117	130
50	60	60	130	130	130	130
	72	60	130	130	130	130
	84	60	130	130	130	130
	96	60	130	130	130	130
	108	60	130	130	130	130
	120	60	122	122	121	130
	144	60	111	111	110	130
60	60	60	130	130	130	130
	72	60	130	130	130	130
	84	60	130	130	130	130
	96	60	129	129	128	130
	108	60	114	114	113	130
	120	60	102	102	101	130
66	60	60	130	130	130	130
	72	60	118	118	118	118
	84	60	118	118	118	118
	96	60	118	118	118	118
	109	60	104	104	103	118
72	60	60	130	130	130	130
	72	60	108	108	108	108
	84	60	108	108	108	108
	96	60	108	108	108	108
	100	60	108	108	107	108
84	60	60	130	130	130	130
	72	60	108	108	108	108
	85	60	93	93	93	93
96	60	60	129	129	128	130
	72	60	108	108	108	108
	75	60	104	104	104	104
108	60	60	114	114	113	130
	67	60	104	104	103	117
120	60	60	102	102	101	130

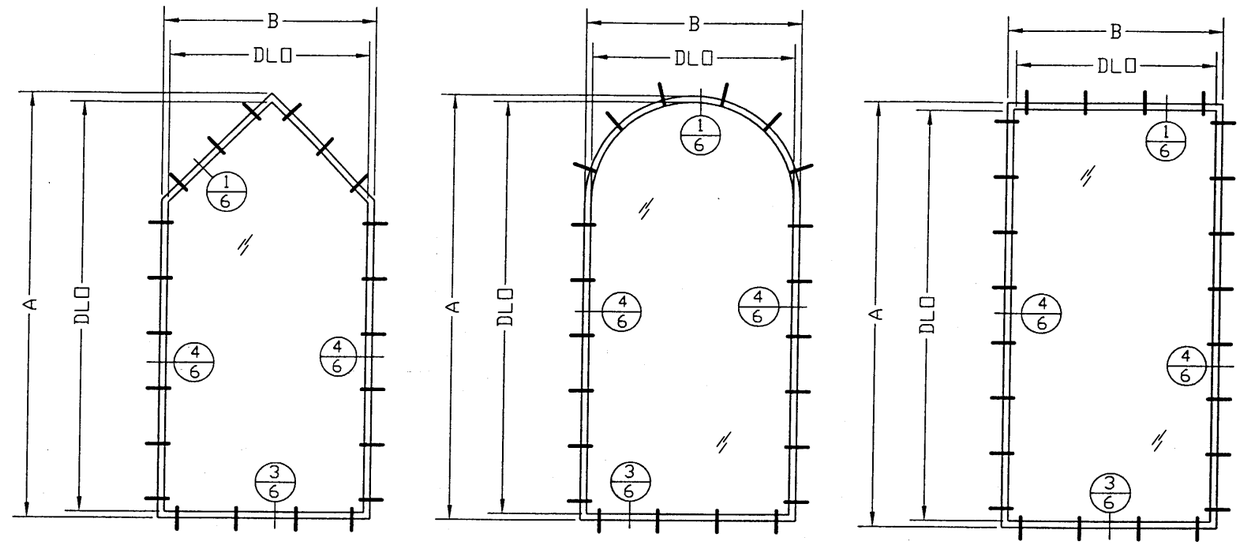

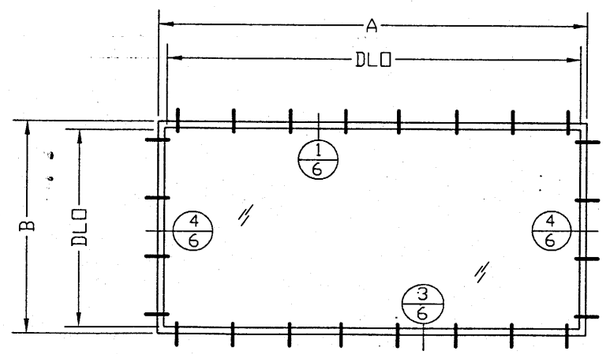

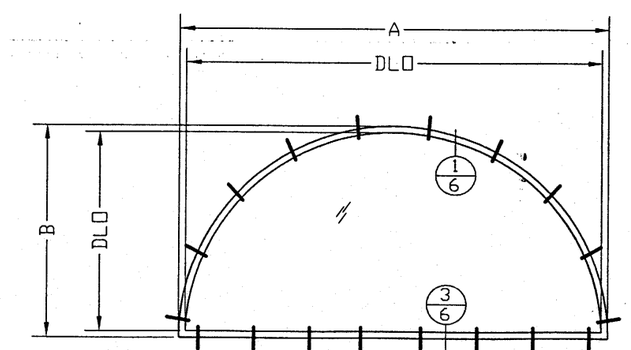

EXAMPLE: Pd<= 108 PSF
MODULAR SIZE: 96X72
GLASS TYPE C1: MAX. 108 PSF (TABLE 1)

TYPICAL ANCHORS
SEE SHEETS 7 AND 8
FOR MORE DETAILS

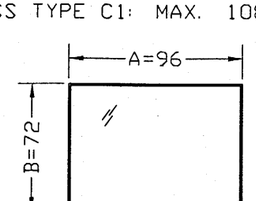

WINDOW TYPE I NOTES:
1- SEE SHEET 5 FOR GLAZING COMPOSITION
2- USE SHEETS 7 AND 8 TABLE 1.1 FOR ANCHORAGE DESIGN
3- ALL SHAPES CAN BE INSTALLED ROTATED

HMC
HURRICANE MANUFACTURING CORPORATION
11850 MIRAMAR PARKWAY
MIRAMAR - FL. - 33025
Phone: (954) 392-7933
Fax: (954) 392-7356

PRODUCT:
HMC 1000
LM SERIES
ALUMINUM STOREFRONT

Engineering:
EngCo Inc.
CA 8116
5595 Orange Dr. 201
Davie, FL 33314
ENGCO@AOL.COM

PEDRO M. DE ROBEJIEDO
LICENSE
No. 52609
STATE OF FLORIDA
PROFESSIONAL ENGINEER
JAN 11 2011
Engineer Seal
Pedro De Robejiedo
PE 52609

DRAFTING:
PK DRAFTING & MORE

MIAMI-DADE BCCO:

PRODUCT REVISED
as complying with the Florida Building Code
Acceptance No 11-0118.03
Expiration Date Oct. 20, 2015
By Manuel Perez
Miami Dade Product Control

Date: 01/11/11
Scale: NA
Design by: PPMF

Drawing Number
11-004

TYPE II - COMBINED SINGLE PANEL UNITS

TABLE 2
ALLOWABLE MODULE PRESSURE
FOR COMBINED SINGLE PANELS

A (IN)	B (IN)	PRESSURE ± (PSF)
48	48	130
	60	130
	72	102
	84	81
	96	68
	104	61
50	60	130
	72	100
	84	79
	96	66
	104	59
60	60	130
	72	93
	84	72
	96	59
66	60	130
	72	91
	84	70
	93	59
72	60	130
	72	90
	84	68
	91	59
84	60	130
	72	90
	84	66
	86	64
96	60	130
	72	90
	75	83
108	60	130
	67	105
120	60	130
144	50	130

EXAMPLE: Pd<= 90PSF
MODULAR SIZE: 96X72
GLASS TYPE C1: MAX. 108 PSF (TABLE 5)
MULLION SPAN: 72"
PRESSURE: MAX. 90 PSF (TABLE 2)

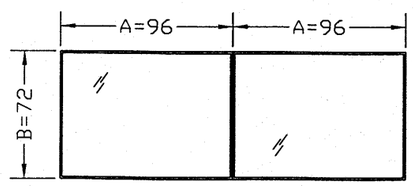

VERTICAL MODULAR UNITS

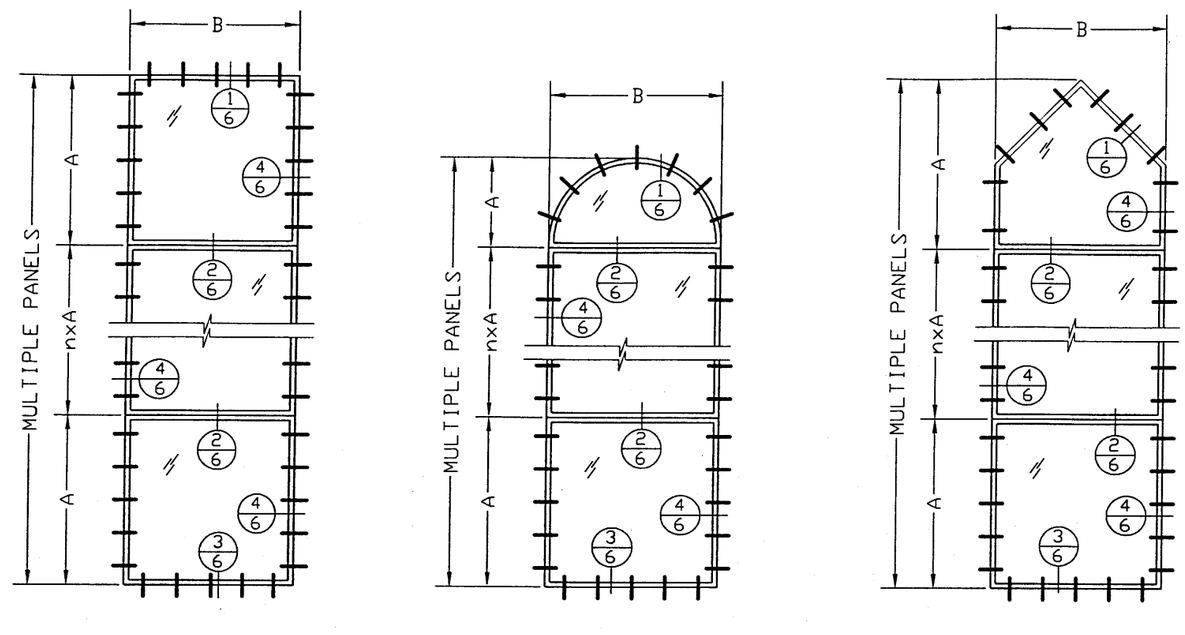

nxA: MULTIPLES "A" PANELS:
n= 1, 2, 3, 4, UNLIMITED

HORIZONTAL MODULAR UNITS

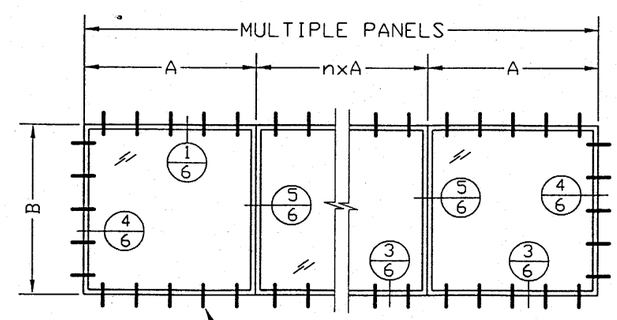

TYPICAL ANCHORS SEE
SHEETS 7, 8 AND 9
FOR MORE DETAILS

WINDOW TYPE II NOTES:

1- USE SHEET 5 FOR GLAZING COMPOSITION AND GLAZING DESIGN USING TABLE 5

2- USE SHEETS 7, 8 AND 9 TABLES 1.1 AND 2.1 FOR ANCHORAGE DESIGN

3- DIMENSION "B" EQUAL TO MULLION SPAN

HMC
HURRICANE MANUFACTURING CORPORATION
11850 MIRAMAR PARKWAY
MIRAMAR - FL. - 33025
Phone: (954) 392-7933
Fax: (954) 392-7356

PRODUCT:
HMC 1000
LM SERIES
ALUMINUM STOREFRONT

Engineering:
EngCo Inc.
CA 8116
5595 Orange Dr. 201
Davie, FL 33314
ENGCOINC@AOL.COM

PEDRO M. DEZQUEIREDO
LICENSED
No. 52609
STATE OF FLORIDA
PROFESSIONAL ENGINEER
Engineer Seal
Pedro M. Figueredo
PE 52609
JAN 10 2011

DRAFTING:
PK DRAFTING & MORE

MIAMI-DADE BCCO:

PRODUCT REVISED
as complying with the Florida Building Code
Acceptance No 11-0118.03
Expiration Date Oct. 20, 2015
By Manuel Perez
Miami Dade Product Control

Date: 01/11/11
Scale: NA
Design by: PPMF

Drawing Number
11-004

SHEET
3 of 12

TYPE III - MULTIPLE PANEL UNITS

TABLE 3
ALLOWABLE MODULE PRESSURE
FOR VERTICAL MULL FRAMING

TW (IN)	FH (IN)	PRESSURE ± (PSF)	G VALUES 50% (IN)	G VALUES 100% (IN)
48	48	130	0.25	0.25
	60	130	0.25	0.25
	72	130	0.25	0.25
	84	130	0.27	0.25
	96	117	0.43	0.28
	104	100	0.52	0.33
50	60	130	0.25	0.25
	72	130	0.25	0.25
	84	130	0.28	0.25
	96	113	0.43	0.28
	104	97	0.52	0.33
60	60	130	0.25	0.25
	72	130	0.25	0.25
	84	124	0.30	0.25
	96	102	0.44	0.28
66	60	130	0.25	0.25
	72	130	0.25	0.25
	84	120	0.30	0.25
	93	102	0.41	0.26
72	60	130	0.25	0.25
	72	130	0.25	0.25
	84	117	0.31	0.25
	91	102	0.38	0.25
84	60	130	0.25	0.25
	72	130	0.25	0.25
	84	114	0.31	0.25
	86	110	0.33	0.25
96	60	130	0.25	0.25
	72	130	0.25	0.25
	75	130	0.25	0.25
108	60	130	0.25	0.25
	67	130	0.25	0.25
120	60	130	0.25	0.25
144	50	130	0.25	0.25

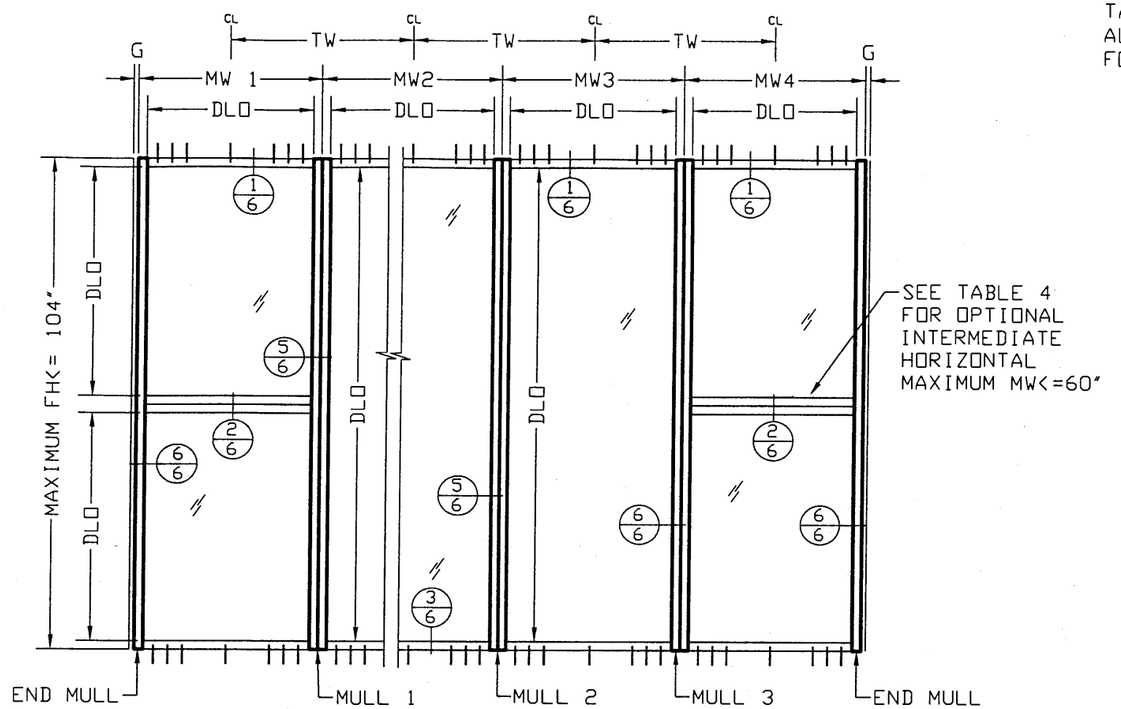

MULL 1: TW= (MW1 + MW2)/2
MULL 2: TW= (MW2 + MW3)/2
END MULL: TW= MW1 AND TW= MW4

OPTIONAL HORIZONTAL TO FIT BETWEEN
CONTINUOUS VERTICAL FRAMING

TABLE 4
ALLOWABLE PRESSURE
FOR INTERMEDIATE HORIZONTAL

TM (IN)	MW (IN)	PRESSURE ± (PSF)
36	36	102
	42	102
	48	102
	50	102
	54	96
	56	87
	66	61
42	36	102
	42	102
	48	102
	50	102
	54	87
	56	80
	60	67
48	36	102
	42	102
	48	102
	50	102
	54	82
	56	75
	60	63
52	36	102
	42	102
	48	102
	50	102
	54	81
	56	73
	60	61

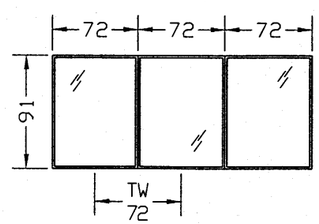

EXAMPLE: Pd<= 102 PSF
MODULAR SIZE: 72X91
GLASS TYPE C1: MAX. 108 PSF (TABLE 5)
MULLION SPAN: 91"
PRESSURE: MAX. 102 PSF
JAMB GAP: >=0.38" SEALANT W/ 50% OR
>=0.25" SEALANT W/ 100% EXTENSION

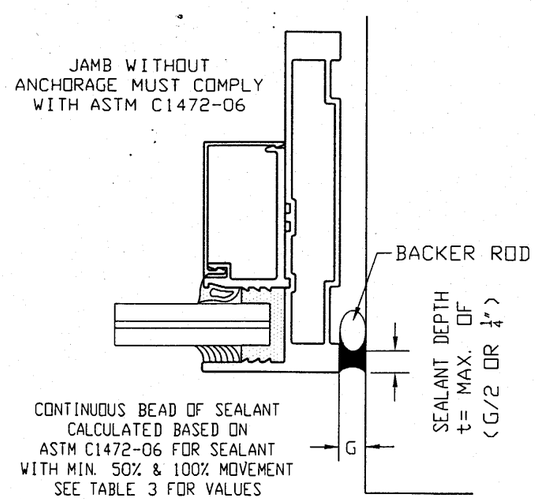

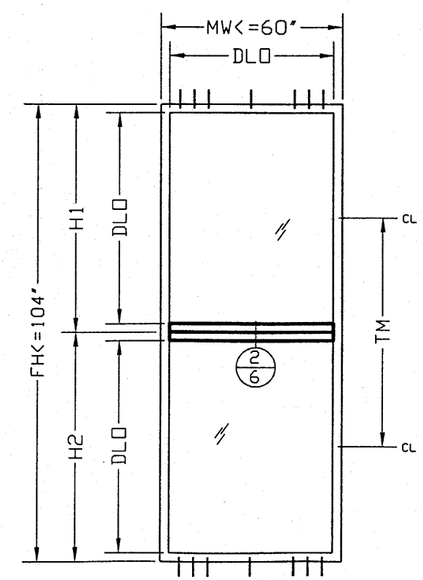

TM= (H1 + H2)/2

WINDOW TYPE III NOTES:

1- USE SHEET 5 FOR GLAZING COMPOSITION AND GLAZING DESIGN USING TABLE 5
2- USE SHEETS 7, 8 AND 10 TABLES 1.1 AND 3.1 FOR ANCHORAGE DESIGN
3- 'G' END MULL MINIMUM SEAL SPACE SEE JAMB DETAIL 6. USE VALUES ACCORDINGLY WITH SEALANT ASTM C-719 EXTENSION PROPERTY 50% OR 100% EXTENSION

HMC
HURRICANE MANUFACTURING CORPORATION
11850 MIRAMAR PARKWAY
MIRAMAR - FL. - 33025
Phone: (954) 392-7933
Fax: (954) 392-7356

PRODUCT:
HMC 1000
LM SERIES
ALUMINUM STOREFRONT

Engineering:
EngCo Inc.
CA 8116
5595 Orange Dr. 201
Davie, FL 33314
ENGCO@AOL.COM

PEDRO M. DE FIGUEIREDO
LICENSE
No. 52609
STATE OF
PROFESSIONAL ENGINEER
JAN 11 2011
Engineer Seal
Pedro De Figueiredo
PE-52609

DRAFTING:
PK DRAFTING & MORE

MIAMI-DADE BCCO:

PRODUCT REVISED
as complying with the Florida
Building Code
Acceptance No 11-0118.03
Expiration Date 01.20.2015
By Miami Dade Product Control

Date: 01/11/11
Scale: NA
Design by: PPMF

Drawing Number
11-004

SHEET
4 of 12

GLAZING CONFIGURATIONS & DESIGNED LOADS

TABLE 5
ALLOWABLE PRESSURE
GLAZING PANEL

A (IN)	B (IN)	GLAZING TYPE A2	A3	A5	B3	B4	C1
48	48	60	130	130	130	130	130
	60	60	130	130	130	130	130
	72	60	130	130	130	130	130
	84	60	130	130	130	130	130
	96	60	130	130	130	130	130
	108	60	130	130	130	130	130
	120	60	129	129	128	130	130
	144	60	118	118	117	124	130
50	60	60	130	130	130	130	130
	72	60	130	130	130	130	130
	84	60	130	130	130	130	130
	96	60	130	130	130	130	130
	108	60	130	130	130	130	130
	120	60	122	122	121	128	130
	144	60	111	111	110	116	130
60	60	60	130	130	130	130	130
	72	60	130	130	130	130	130
	84	60	130	130	130	130	130
	96	60	129	129	128	130	130
	108	60	114	114	113	119	130
	120	60	102	102	101	107	130
66	60	60	130	130	130	130	130
	72	60	118	118	118	118	130
	84	60	118	118	118	118	130
	96	60	118	118	118	118	130
	109	60	104	104	103	109	130
72	60	60	130	130	130	130	130
	72	60	108	108	108	108	130
	84	60	108	108	108	108	130
	96	60	108	108	108	108	130
	100	60	108	108	107	108	130
84	60	60	130	130	130	130	130
	72	60	108	108	108	108	130
	85	60	93	93	93	93	130
96	60	60	129	129	128	130	130
	72	60	108	108	108	108	130
	75	60	104	104	104	104	130
108	60	60	114	114	113	119	130
	67	60	104	104	103	109	130
120	60	60	102	102	101	107	130

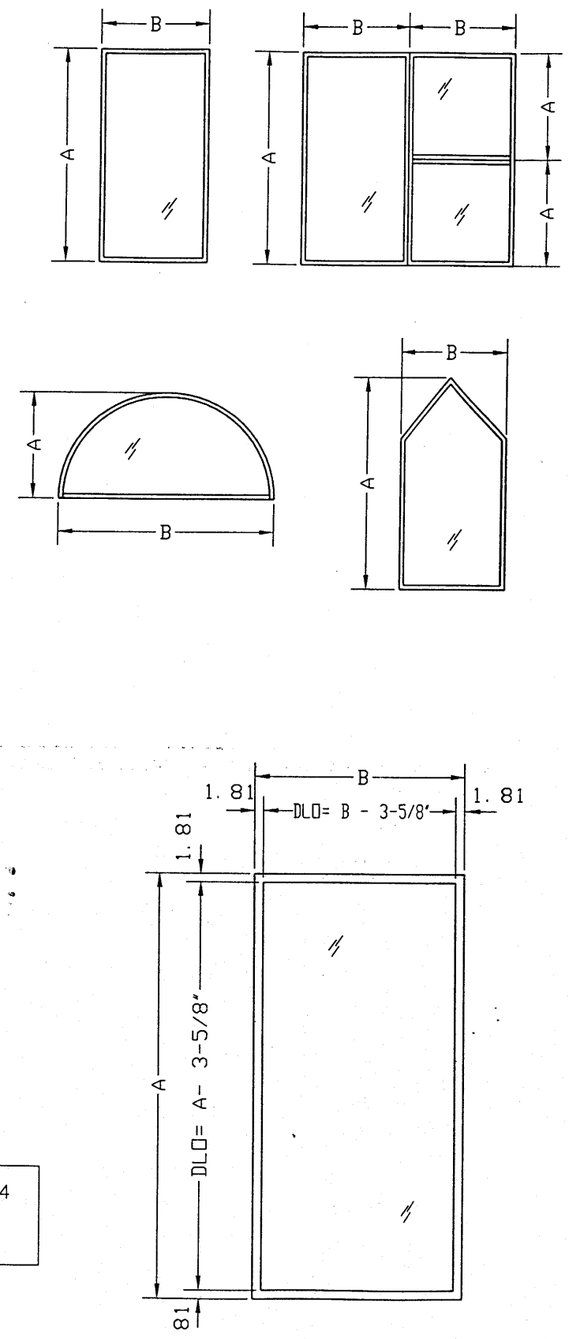

USE IN CONJUNCTION WITH TABLES 1, 2, 3 OR 4
DESIGN MUST BE CONTROLLED BY THE LOWEST
PRESSURE FROM APPLICABLE TABLES

GLAZING CONFIGURATIONS A2, A3, A5, B4 AND C
COMPLY WITH ANSI Z97.1

TYPE A - 9/16" LAMINATED IMPACT GLASS

TYPE	MANUFACTURER	INTERLAYER	IMPACT CLASSIFICATION
A2	SOLUTIA	.09" PVB	LARGE LEVEL D
A3	SOLUTIA	.075 VANCEVA	LARGE LEVEL D
A5	VIRACON	HRG II	LARGE LEVEL E (80ft/s)

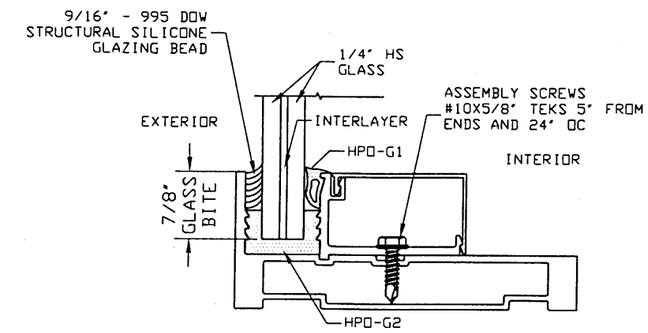

TYPE B - 1 5/16" LAM. INSULATED IMPACT GLASS

TYPE	MANUFACTURER	INTERLAYER	IMPACT CLASSIFICATION
B3	SOLUTIA	.075" VANCEVA	LARGE LEVEL D
B4	SOLUTIA	.077" VANCEVA	LARGE LEVEL D

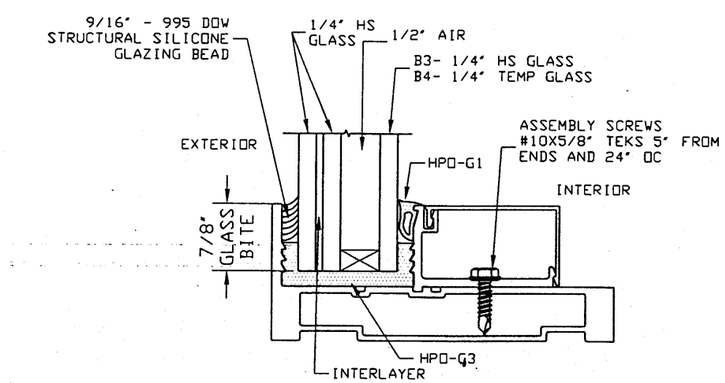

TYPE C - 1 5/8" LAM. DOUBLE INSULATED IMPACT GLASS

TYPE	MANUFACTURER	INTERLAYERS	IMPACT CLASSIFICATION
C1	VIRACON	.075" VANCEVA .10 STORMGUARD	LARGE LEVEL E (80ft/S)

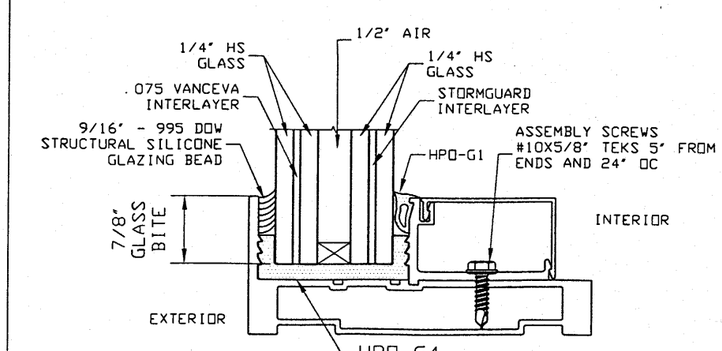

HMC
HURRICANE
MANUFACTURING
CORPORATION
11850 MIRAMAR PARKWAY
MIRAMAR - FL. - 33025
Phone: (954) 392-7933
Fax: (954) 392-7356

PRODUCT:
HMC 1000
LM SERIES
ALUMINUM STOREFRONT

Engineering:
EngCo Inc.
CA 8116
5595 Orange Dr. 201
Davie, Fl. 33314
ENGCO@AOL.COM

PEDRO M. DE FIGUEIREDO
LICENSE
No. 52609
JAN 11 2011
STATE OF FLORIDA
PROFESSIONAL ENGINEER
Engineer Seal
Pedro De Figueiredo
PE 52609

DRAFTING:
PK DRAFTING & MORE

MIAMI-DADE BCCO:

PRODUCT REVISED
as complying with the Florida
Building Code
Acceptance No 11-0118.03
Expiration Date Oct. 20, 2015
By Manuel Sera
Miami Dade Product Control

Date: 01/11/11
Scale: NA
Design by: PPMF

Drawing Number
11-004

SECTION DETAILS

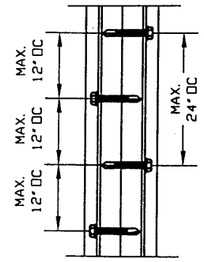

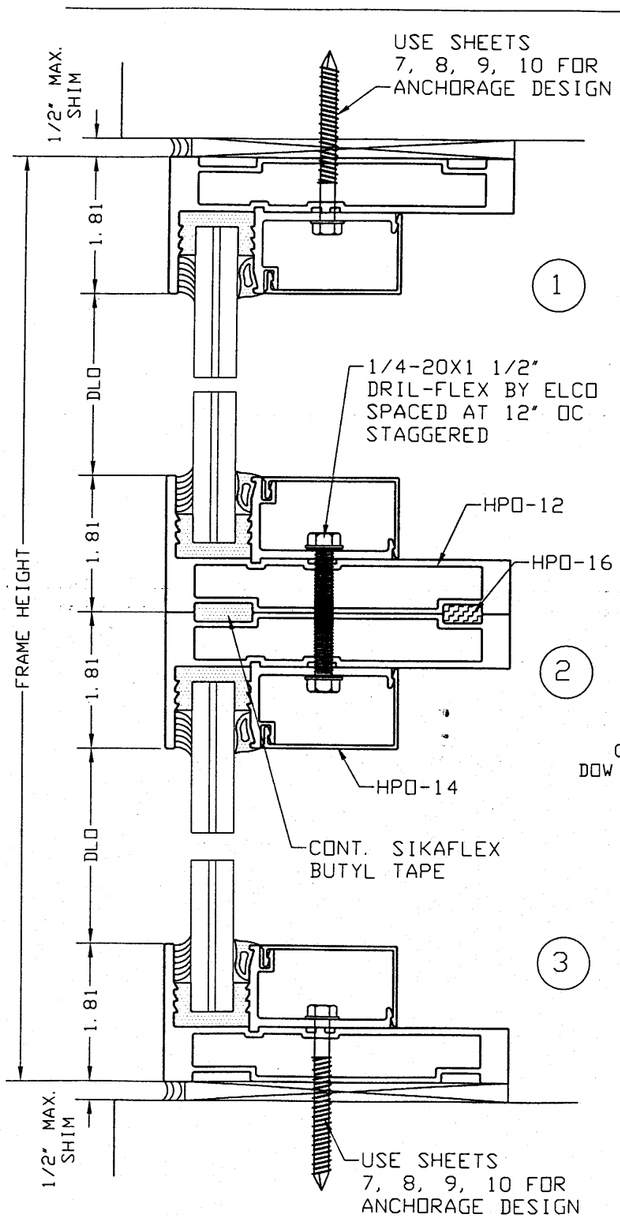

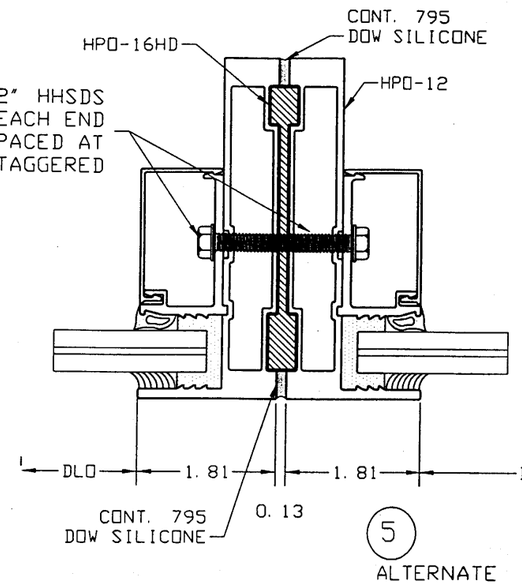

MULL PROPERTIES:
Ixx=8. 05 in^4
OUTWARD Sxx= 4. 19 in^3
INWARD Sxx= 3. 12 in^3

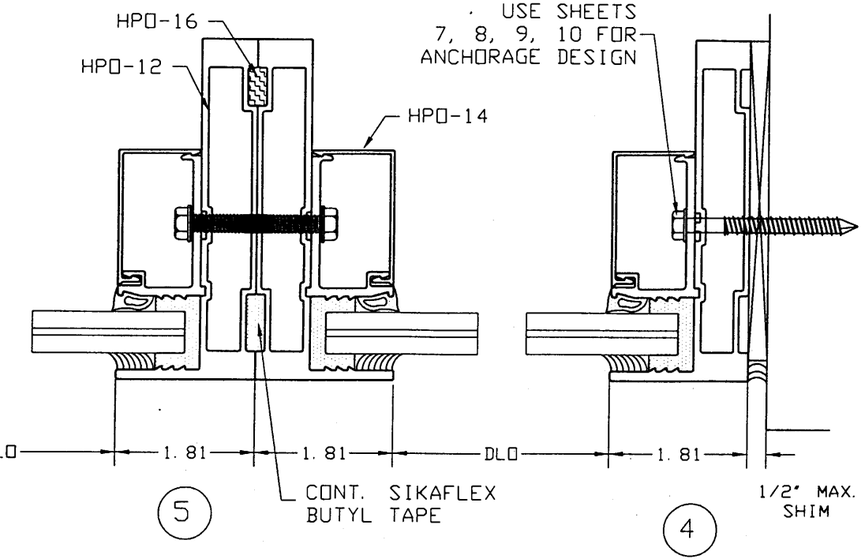

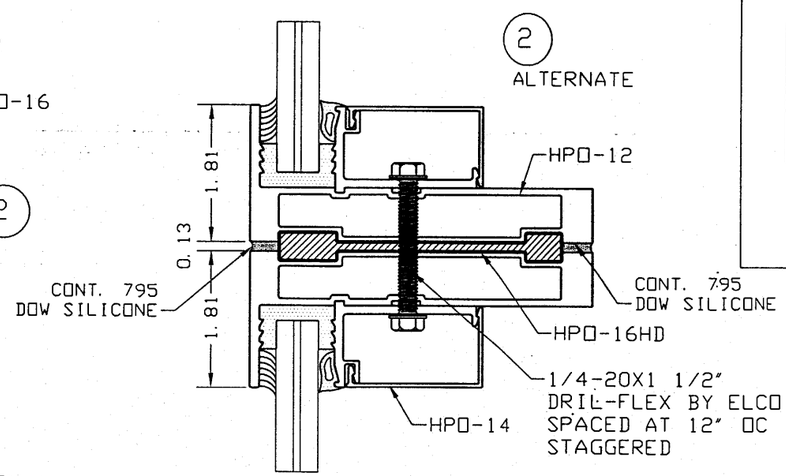

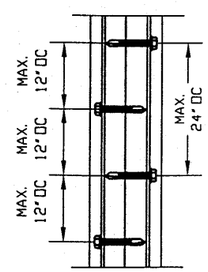

EXAMPLE PERIMETER SEALANT OPTIONS:

BRAND	ASTM C719 EXTENSION
DOW CORNING 795	50%
DOW CORNING 790	100%
TREMCO SPECTREM 2 & 3	50%
TREMCO SPECTREM 1	100%

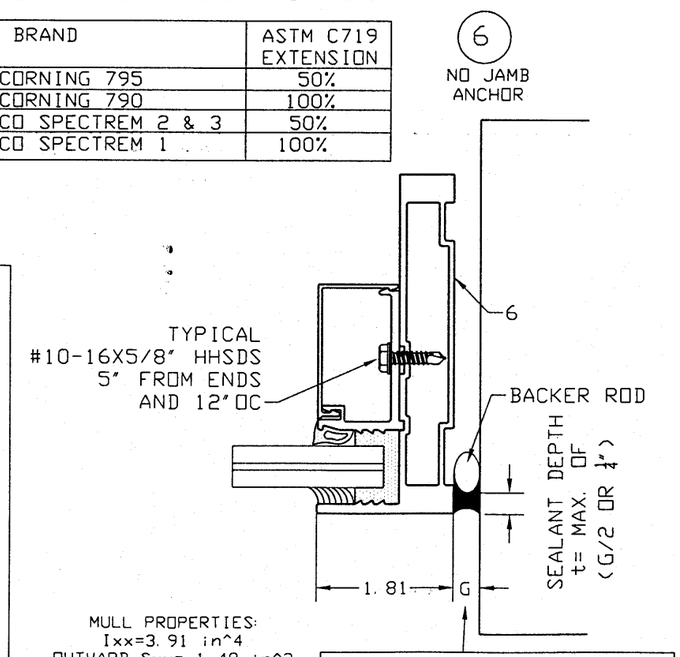

MULL PROPERTIES:
Ixx=3. 91 in^4
OUTWARD Sxx= 1. 48 in^3
INWARD Sxx= 2. 10 in^3

CONTINUOUS BEAD OF SEALANT CALCULATED BASED ON ASTM C1472-06 FOR SEALANT WITH MIN. 50% & 100% MOVEMENT SEE TABLE 3 FOR VALUES

HMC

HURRICANE MANUFACTURING CORPORATION

11850 MIRAMAR PARKWAY
MIRAMAR - FL. - 33025
Phone: (954) 392-7933
Fax: (954) 392-7356

PRODUCT:
HMC 1000
LM SERIES
ALUMINUM STOREFRONT

Engineering:
EngCo Inc.
CA 8116
5595 Orange Drive
Davie, FL 33314
ENGCO@AOL.COM

PEDRO M. DE FIGUEIREDO
LICENSE No. 52609
STATE OF FLORIDA
PROFESSIONAL ENGINEER
Engineer Seal
Raised Seal Required
PE 52609

DRAFTING:
PK DRAFTING & MORE

MIAMI-DADE BCCO:

PRODUCT REVISED
as complying with the Florida Building Code
Acceptance No 11-0118.03
Expiration Date Oct. 20, 2015
By Manuel Perez
Miami Dade Product Control

Date: 01/11/11
Scale: NA
Design by: PPMF

Drawing Number
11-004

FRAMING ANCHORAGE OPTIONS

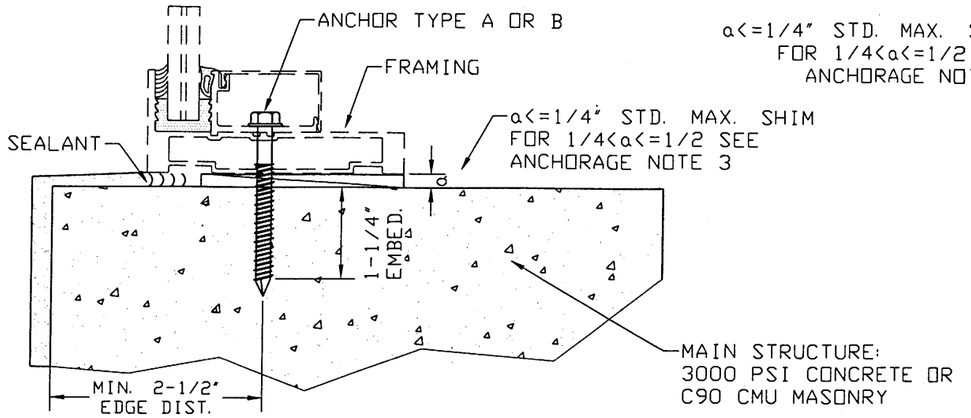

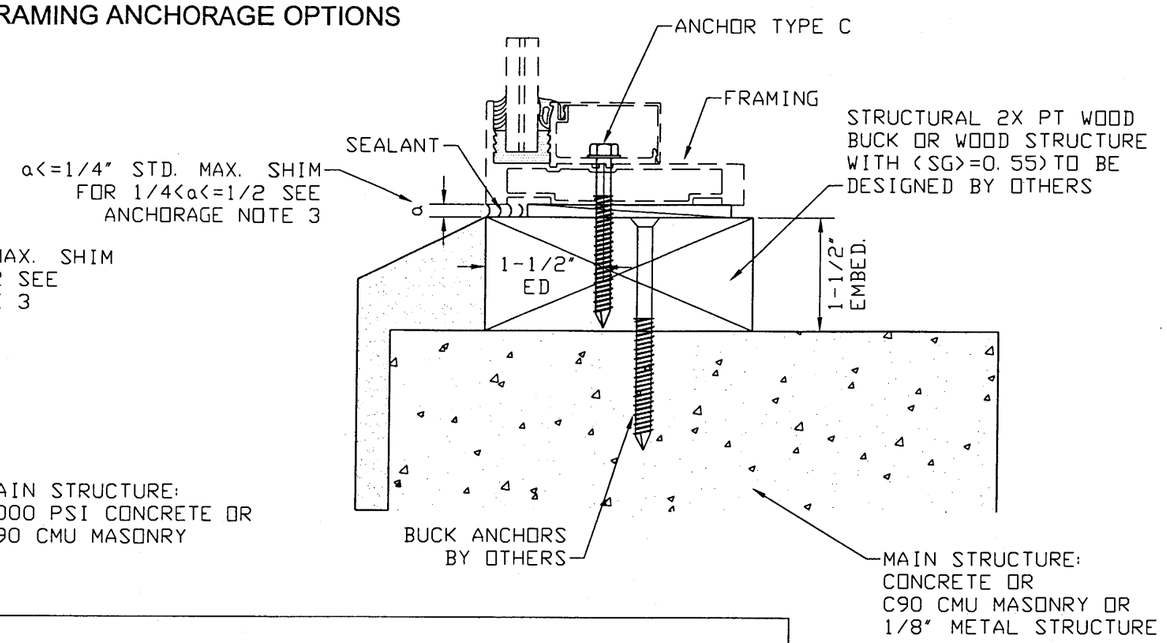

ANCHORAGE NOTES:

1- PERIMETER FRAMING ANCHORAGE APPLICABLE FOR SILL, JAMB OR HEADER
2- USE ANCHORAGE OPTIONS WITH SHEETS 8, 9 OR 10 TO DESIGN ANCHORAGE SPACING AND LAY-OUT.
3- SHIM SPACING CAN BE INCREASED UP TO 1/2". SEE OPTION "*" ON TABLES 1.1, 2.1 AND 3.1

ANCHORAGE OPTIONS:

A- 1/4" ss ITW TAPCON 1-1/4" DIRECTLY INTO 3000 PSI CONCRETE
B- 1/4" ss ITW TAPCON 1-1/4" DIRECTLY INTO MASONRY
C- 1/4" ss ITW TAPCON OR 1/4" ss SMS 1 1/2" DIRECTLY INTO MIN. 2X WOOD STRUCTURE (SG>=0.55)
D- 1/4" ss SMS DIRECTLY INTO MIN. 1/8" METAL STRUCTURE (6063-T5 ALUM. OR ASTM A36 STEEL)
E- ALL ANCHORS ABOVE INSTALLED THROUGH 1X PT INTO MAIN STRUCTURE

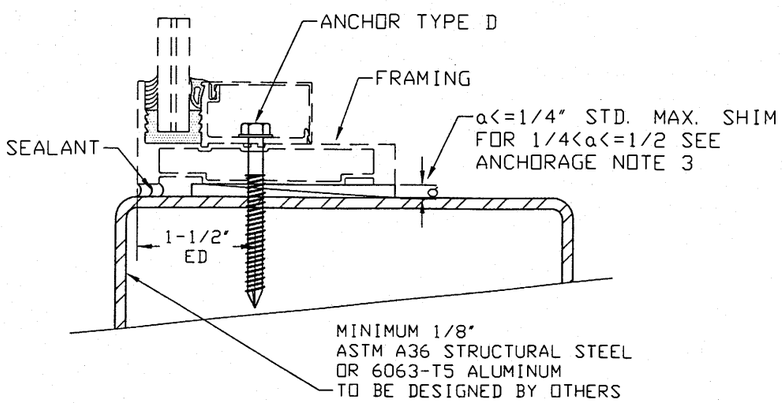

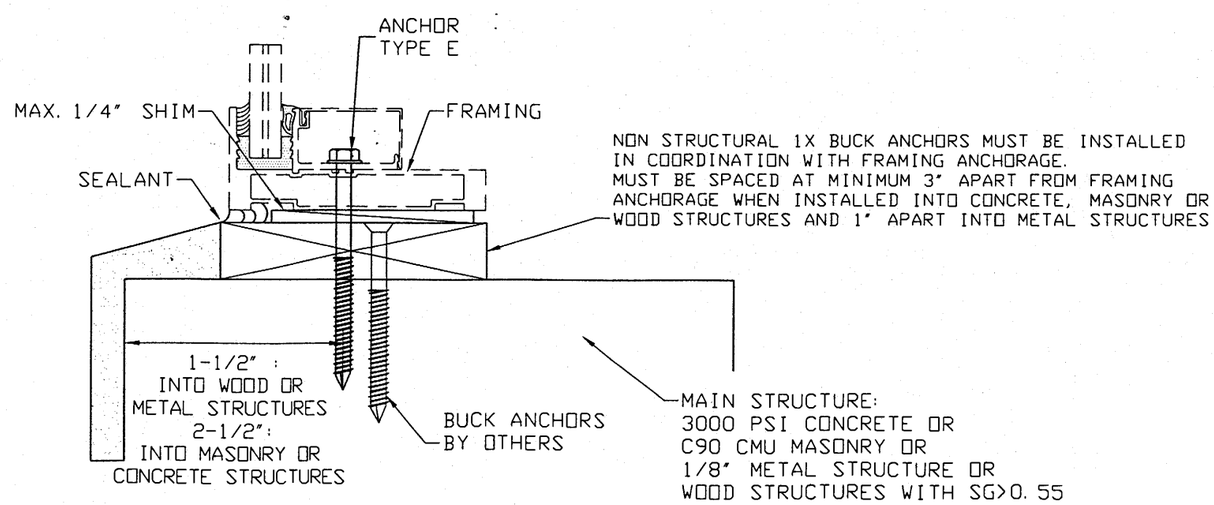

HMC
HURRICANE MANUFACTURING CORPORATION
11850 MIRAMAR PARKWAY
MIRAMAR - FL. - 33025
Phone: (954) 392-7933
Fax: (954) 392-7356

PRODUCT:
HMC 1000
LM SERIES
ALUMINUM STOREFRONT

Engineering:
EngCo Inc.
CA 8116
5595 Orange Dr. 201
Davie, FL 33314
ENGCOINAE.COM

PEDRO A. DE FIGUEIREDO
LICENSE
No. 52609
STATE OF FLORIDA
PROFESSIONAL ENGINEER
JAN 1 1 2011
Engineer Seal
Pedro De Figueiredo
PE 52609

DRAFTING:
PK DRAFTING & MORE

MIAMI-DADE BCCO:

PRODUCT REVISED
as complying with the Florida Building Code
Acceptance No 11-0118.03
Expiration Date Oct. 20, 2015
By Manuel Perez
Miami-Dade Product Control

Date: 01/11/11
Scale: NA
Design by: PPMF

Drawing Number
11-004

TYPE I - SINGLE PANEL UNITS
ANCHORAGE DESIGN

TABLE 1.1 - TYPE I & II WINDOWS
MAXIMUM ANCHORAGE SPACING 'S' (IN ON CENTERS)

ANCHORAGE TYPE SEE SHEET 7 AND NOTES BELOW FOR DESCRIPTION

A (IN)	B (IN)	Pd PSF	ANCHOR TYPE A	B	C	D	E	*	Pd PSF	ANCHOR TYPE A	B	C	D	E	*	Pd PSF	ANCHOR TYPE A	B	C	D	E	*
48	48	130	12	12	12	12	10	7	80	12	12	12	12	12	12	60	12	12	12	12	12	12
	60	130	12	12	12	12	10	7	80	12	12	12	12	12	12	60	12	12	12	12	12	12
	72	130	12	12	12	12	10	7	80	12	12	12	12	12	12	60	12	12	12	12	12	12
	84	130	12	12	12	12	10	7	80	12	12	12	12	12	12	60	12	12	12	12	12	12
	96	130	12	12	12	12	10	7	80	12	12	12	12	12	12	60	12	12	12	12	12	12
	108	130	12	12	12	12	10	7	80	12	12	12	12	12	12	60	12	12	12	12	12	12
	120	130	12	12	12	12	10	7	80	12	12	12	12	12	12	60	12	12	12	12	12	12
	144	130	12	12	12	12	10	7	80	12	12	12	12	12	12	60	12	12	12	12	12	12
50	60	130	12	12	11	12	9	7	80	12	12	12	12	12	11	60	12	12	12	12	12	12
	72	130	12	12	11	12	9	7	80	12	12	12	12	12	11	60	12	12	12	12	12	12
	84	130	12	12	11	12	9	7	80	12	12	12	12	12	11	60	12	12	12	12	12	12
	96	130	12	12	11	12	9	7	80	12	12	12	12	12	11	60	12	12	12	12	12	12
	108	130	12	12	11	12	9	7	80	12	12	12	12	12	11	60	12	12	12	12	12	12
	120	130	12	12	11	12	9	7	80	12	12	12	12	12	11	60	12	12	12	12	12	12
	144	130	12	12	11	12	9	7	80	12	12	12	12	12	11	60	12	12	12	12	12	12
60	60	130	11	10	9	12	8	5	80	12	12	12	12	12	9	60	12	12	12	12	12	12
	72	130	11	10	9	12	8	5	80	12	12	12	12	12	9	60	12	12	12	12	12	12
	84	130	11	10	9	12	8	5	80	12	12	12	12	12	9	60	12	12	12	12	12	12
	96	130	11	10	9	12	8	5	80	12	12	12	12	12	9	60	12	12	12	12	12	12
	108	130	11	10	9	12	8	5	80	12	12	12	12	12	9	60	12	12	12	12	12	12
	120	130	11	10	9	12	8	5	80	12	12	12	12	12	9	60	12	12	12	12	12	12
66	60	130	11	10	9	12	8	5	80	12	12	12	12	12	9	60	12	12	12	12	12	12
	72	118	11	10	9	12	8	5	80	12	12	12	12	12	8	60	12	12	12	12	12	11
	84	118	11	10	9	12	8	5	80	12	12	12	12	12	8	60	12	12	12	12	12	11
	96	118	11	10	9	12	8	5	80	12	12	12	12	12	8	60	12	12	12	12	12	11
	109	118	11	10	9	12	8	5	80	12	12	12	12	12	8	60	12	12	12	12	12	11
72	60	130	11	10	9	12	8	5	80	12	12	12	12	12	9	60	12	12	12	12	12	12
	72	108	11	10	9	12	8	5	80	12	12	12	12	11	8	60	12	12	12	12	12	10
	84	108	11	10	9	12	8	5	80	12	12	12	12	11	8	60	12	12	12	12	12	10
	96	108	11	10	9	12	8	5	80	12	12	12	12	11	8	60	12	12	12	12	12	10
	100	108	11	10	9	12	8	5	80	12	12	12	12	11	8	60	12	12	12	12	12	10
84	60	130	11	10	9	12	8	5	80	12	12	12	12	12	9	60	12	12	12	12	12	12
	72	108	11	10	9	12	8	5	80	12	12	12	12	11	8	60	12	12	12	12	12	10
	85	93	11	10	9	12	8	5	80	12	11	11	12	9	6	60	12	12	12	12	12	9
96	60	130	11	10	9	12	8	5	80	12	12	12	12	12	9	60	12	12	12	12	12	12
	72	108	11	10	9	12	8	5	80	12	12	12	12	11	8	60	12	12	12	12	12	10
	75	104	11	10	9	12	8	5	80	12	12	12	12	10	7	60	12	12	12	12	12	10
108	60	130	11	10	9	12	8	5	80	12	12	12	12	12	9	60	12	12	12	12	12	12
	67	117	11	10	9	12	8	5	80	12	12	12	12	11	8	60	12	12	12	12	12	11
120	60	130	11	10	9	12	8	5	80	12	12	12	12	12	9	60	12	12	12	12	12	12

EXAMPLE:
ANCHORAGE TYPE: C AS PER SHEET 7
SPACING: 9" OC
MODULAR SIZE: 60X120
PRESSURE: MAX. 130 PSF

TYPICAL MINIMUM ANCHOR SPACING: (S)
USE TABLE 1.1

EXAMPLE 1:
A= 84", B= 85" PD<= 80 PSF
S<= 6" OC FOR ANCHORAGE TYPE "*"
S<= 11" OC FOR ANCHORAGE TYPE B

EXAMPLE 2:
A= 84", B= 85" PD<= 60 PSF
S<= 9" OC FOR ANCHORAGE TYPE "*"
S<= 12" OC FOR ANCHORAGE TYPE B

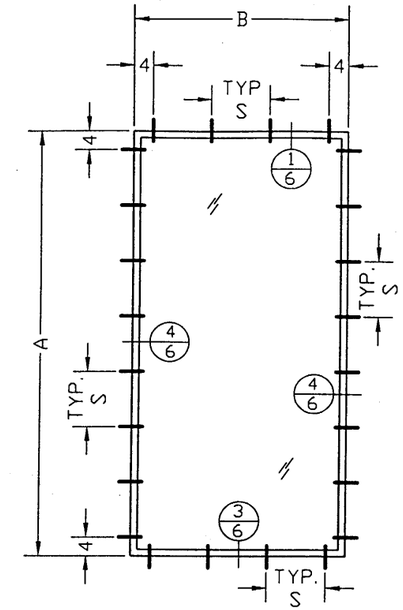

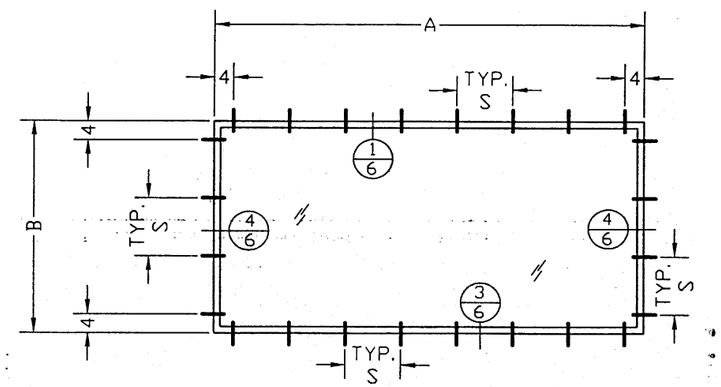

EXAMPLE:
ANCHORAGE TYPE: A, B, C OR D WITH 1/2" SHIM
SPACING: 9" OC
MODULAR SIZE: 84X85
PRESSURE: MAX. 60 PSF

ANCHOR OPTIONS:

A- 1/4" ss ITW TAPCON 1-1/4" DIRECTLY INTO 3000 PSI CONCRETE
B- 1/4" ss ITW TAPCON 1-1/4" DIRECTLY INTO MASONRY
C- 1/4" ss ITW TAPCON OR 1/4" ss SMS 1 1/2" DIRECTLY INTO MIN. 2X WOOD STRUCTURE (SG>=0.55)
D- 1/4" ss SMS DIRECTLY INTO MIN. 1/8" METAL STRUCTURE (6063-T5 ALUM. OR ASTM A36 STEEL)
E- ALL ANCHORS ABOVE INSTALLED THROUGH 1X PT INTO MAIN STRUCTURE

NOTES:
1- ANCHOR TYPE E: 1X ANCHOR SPACING MUST BE COORDINATED WITH FRAMING ANCHORAGE SPACING.
2- MAXIMUM SHIM SPACING FOR ANCHOR TYPES A, B, C, D OR E IS 1/4"
3- "*": ANCHORS TYPE A, B, C OR D WITH SHIM SPACING GREATER THAN 1/4" BUT LESS OR EQUAL 1/2".

HMC
HURRICANE MANUFACTURING CORPORATION
11850 MIRAMAR PARKWAY
MIRAMAR - FL. - 33025
Phone: (954) 392-7933
Fax: (954) 392-7356

PRODUCT:
HMC 1000
LM SERIES
ALUMINUM STOREFRONT

Engineering:
EngCo Inc.
CA 8116
5595 Orange Dr. 201
Davie, Fl 33314
ENGCO@AOL.COM

PEDRO A. DE FIGUEIREDO
LICENSE
No. 52609
STATE OF FLORIDA
PROFESSIONAL ENGINEER
Electronic Seal
Pedro De Figueiredo
P.E. 52609

DRAFTING:
PK DRAFTING & MORE

MIAMI-DADE BCCO:

PRODUCT REVISED
as complying with the Florida Building Code
Acceptance No 11-0118.03
Expiration Date Oct. 20, 2015
By Manuel Perez
Miami Dade Product Control

Date: 01/11/11
Scale: NA
Design by: PPMF

Drawing Number
11-004

SHEET
8 of 12

TYPE II - COMBINED SINGLE PANEL UNITS
ANCHORAGE DESIGN

TABLE 2.1 - TYPE II WINDOW
MAXIMUM # OF ANCHORS PER CLUSTER

ANCHORAGE TYPE SEE SHEET 7 AND NOTES BELOW FOR DESCRIPTION

B (IN)	A (IN)	Pd (PSF)	ANCHOR TYPE A	B	C	D	*	E	Pd (PSF)	ANCHOR TYPE A	B	C	D	*	E	Pd (PSF)	ANCHOR TYPE A	B	C	D	*	E
48	48	130	2	2	2	2	4	6	80	2	2	2	2	2	4	60	2	2	2	2	2	4
	60	130	4	4	4	2	6	8	80	2	2	2	2	4	6	60	2	2	2	2	4	4
	72	102	4	4	4	2	6	8	80	2	4	4	2	4	6	60	2	2	2	2	4	6
	84	81	4	4	4	2	6	8	80	4	4	4	2	6	8	60	2	4	4	2	4	6
	96	68	4	4	4	2	6	8	68	4	4	4	2	6	8	60	4	4	4	2	6	8
	104	61	4	4	4	2	6	8	61	4	4	4	2	6	8	60	4	4	4	2	6	8
50	60	130	4	4	4	2	6	8	80	2	2	2	2	4	6	60	2	2	2	2	4	4
	72	100	4	4	4	2	6	8	80	4	4	4	2	6	6	60	2	2	2	2	4	6
	84	79	4	4	4	2	6	8	79	4	4	4	2	6	8	60	2	4	4	2	4	6
	96	66	4	4	4	2	6	8	66	4	4	4	2	6	8	60	4	4	4	2	6	8
	104	59	4	4	4	2	6	8	59	4	4	4	2	6	8	59	4	4	4	2	6	8
60	60	130	4	4	4	2	6	8	80	2	2	2	2	4	6	60	2	2	2	2	4	4
	72	93	4	4	4	2	6	8	80	4	4	4	2	6	8	60	2	2	2	2	4	6
	84	72	4	4	4	2	6	8	72	4	4	4	2	6	8	60	4	4	4	2	6	6
	96	59	4	4	4	2	6	8	59	4	4	4	2	6	8	59	4	4	4	2	6	8
66	60	130	4	4	4	2	6	8	80	2	2	2	2	4	6	60	2	2	2	2	4	4
	72	91	4	4	4	2	6	8	80	4	4	4	2	6	8	60	2	2	4	2	4	6
	84	70	4	4	4	2	6	8	70	4	4	4	2	6	8	60	4	4	4	2	6	8
	93	59	4	4	4	2	6	8	59	4	4	4	2	6	8	59	4	4	4	2	6	8
72	60	130	4	4	4	2	6	8	80	2	2	2	2	4	6	60	2	2	2	2	4	4
	72	90	4	4	4	2	6	8	80	4	4	4	2	6	8	60	2	2	4	2	4	6
	84	68	4	4	4	2	6	8	68	4	4	4	2	6	8	60	4	4	4	2	6	8
	91	59	4	4	4	2	6	8	59	4	4	4	2	6	8	59	4	4	4	2	6	8
84	60	130	4	4	4	2	6	8	80	2	2	2	2	4	6	60	2	2	2	2	4	4
	72	90	4	4	4	2	6	8	80	4	4	4	2	6	8	60	2	2	4	2	4	6
	84	66	4	4	4	2	6	8	66	4	4	4	2	6	8	60	4	4	4	2	6	8
	86	64	4	4	4	2	6	8	64	4	4	4	2	6	8	60	4	4	4	2	6	8
96	60	130	4	4	4	2	6	8	80	2	2	2	2	4	6	60	2	2	2	2	4	4
	72	90	4	4	4	2	6	8	80	4	4	4	2	6	8	60	2	2	4	2	4	6
	75	83	4	4	4	2	6	8	80	4	4	4	2	6	8	60	2	4	4	2	4	6
108	60	130	4	4	4	2	6	8	80	2	2	2	2	4	6	60	2	2	2	2	4	4
	67	105	4	4	4	2	6	8	80	2	4	4	2	4	6	60	2	2	2	2	4	6
120	60	130	4	4	4	2	6	8	80	2	2	2	2	4	6	60	2	2	2	2	4	4
144	50	130	2	4	4	2	4	6	80	2	2	2	2	4	4	60	2	2	2	2	2	4

EXAMPLE: ANCHORAGE TYPE: A, B, C OR D
AS PER SHEET 7 WITH 1/2" SHIM
OF ANCHORS / CLUSTER: 4
MODULAR SIZE: 144X50 - MULL SPAN: 50"
MAX. PRESSURE: 80 PSF

EXAMPLE: ANCHORAGE TYPE: C
AS PER SHEET 7 W/ 1/4" SHIM
OF ANCHORS / CLUSTER: 4
MODULAR SIZE: 144X50 - MULL SPAN: 50"
MAX. PRESSURE: 130 PSF

EXAMPLE: ANCHORAGE TYPE: A
AS PER SHEET 7 WITH 1/4" SHIM
OF ANCHORS / CLUSTER: 2
MODULAR SIZE: 144X50 - MULL SPAN: 50"
MAX. PRESSURE: 80 PSF

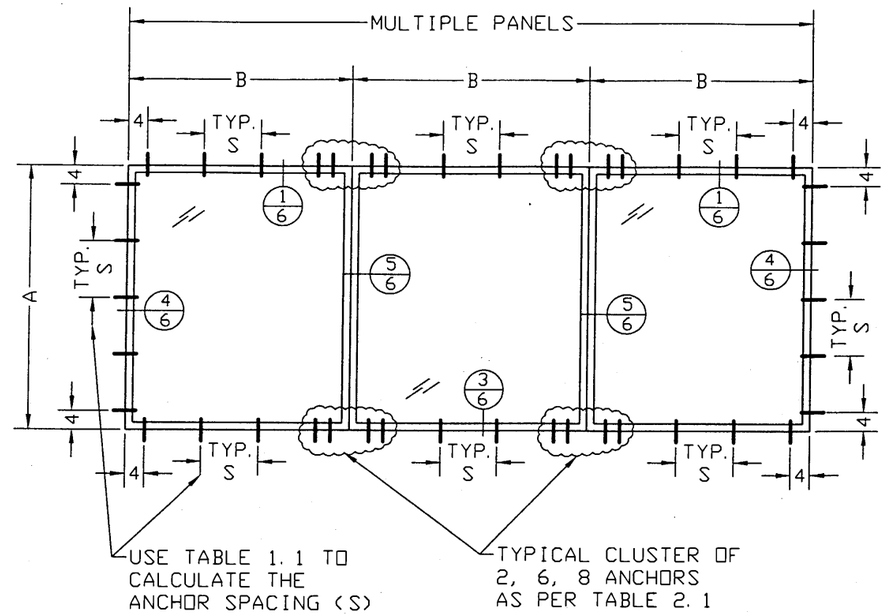

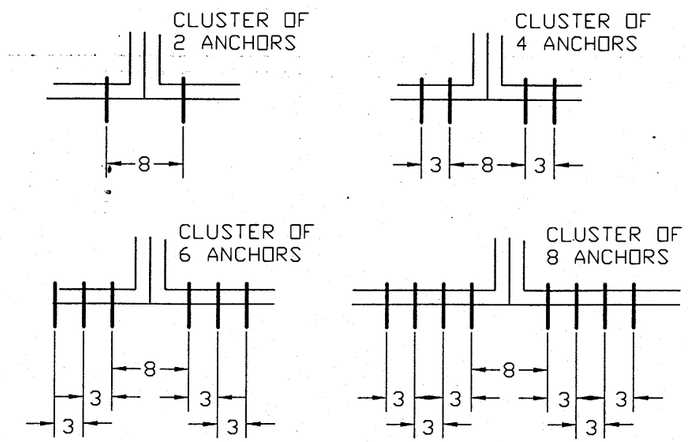

NOTES:
1- IN LOCATIONS WHERE ANCHORS ARE PLACED IN CLUSTERS, ANCHOR TYPE E, IS DESIGNED FOR 3/4" CANTILEVER CONSIDERING THE 1X JUST AS A FILLER. ALL OTHER LOCATIONS 1X BUCK MUST BE PROPERLY SECURED TO THE SUBSTRATE AND IN COORDINATION WITH FRAMING ANCHORAGE.
2- MAXIMUM SHIM SPACING FOR ANCHOR TYPES A, B, C, D OR E IS 1/4"
3- "*": ANCHORS TYPE A, B, C OR D WITH SHIM SPACING GREATER THAN 1/4" BUT LESS OR EQUAL 1/2".

ANCHOR OPTIONS:
A- 1/4" ss ITW TAPCON 1-1/4" DIRECTLY INTO 3000 PSI CONCRETE
B- 1/4" ss ITW TAPCON 1-1/4" DIRECTLY INTO MASONRY
C- 1/4" ss ITW TAPCON OR 1/4" ss SMS 1 1/2" DIRECTLY INTO MIN. 2X WOOD STRUCTURE (SG>=0.55)
D- 1/4" ss SMS DIRECTLY INTO MIN. 1/8" METAL STRUCTURE (6063-T5 ALUM. OR ASTM A36 STEEL)
E- ALL ANCHORS ABOVE INSTALLED THROUGH 1X PT INTO MAIN STRUCTURE

HMC
HURRICANE MANUFACTURING CORPORATION
11850 MIRAMAR PARKWAY
MIRAMAR - FL. - 33025
Phone: (954) 392-7933
Fax: (954) 392-7356

PRODUCT:
HMC 1000
LM SERIES
ALUMINUM STOREFRONT

Engineering:
EngCo Inc.
CA 8116
5595 Orange Dr. 201
Davie, Fl. 33314
ENGCO@AOL.COM

PEDRO J. DE FIGUEIREDO
LICENSE
No. 52609
STATE OF FLORIDA
PROFESSIONAL ENGINEER
JAN 11 2011
Engineer Seal
Pedro De Figueiredo
PE 52609

DRAFTING:
PK DRAFTING & MORE

MIAMI-DADE BCCO:

PRODUCT REVISED
as complying with the Florida Building Code
Acceptance No 11-0118.03
Expiration Date Oct. 20, 2015
By Manuel Perez
Miami Dade Product Control

Date: 01/11/11
Scale: NA
Design by: PPMF

Drawing Number
11-004

SHEET
9 of 12

TYPE III - MULTIPLE PANEL UNITS
ANCHORAGE DESIGN

TABLE 3. 1 - TYPE III WINDOW
MAXIMUM # OF ANCHORS PER CLUSTER

TW (IN)	FH (IN)	Pd (PSF)	ANCHOR TYPE A	B	C	D	*	E	Pd (PSF)	ANCHOR TYPE A	B	C	D	*	E	Pd (PSF)	ANCHOR TYPE A	B	C	D	*	E
48	48	130	6	6	6	6	6	6	80	6	6	6	6	6	6	60	6	6	6	6	6	6
	60	130	6	6	6	6	6	8	80	6	6	6	6	6	6	60	6	6	6	6	6	6
	72	130	6	6	6	6	8	10	80	6	6	6	6	6	6	60	6	6	6	6	6	6
	84	130	6	6	6	6	10	12	80	6	6	6	6	6	8	60	6	6	6	6	6	6
	96	117	6	6	6	6	10	14	80	6	6	6	6	6	10	60	6	6	6	6	6	8
	104	100	6	6	6	6	10	12	80	6	6	6	6	8	10	60	6	6	6	6	6	8
50	60	130	6	6	6	6	6	8	80	6	6	6	6	6	6	60	6	6	6	6	6	6
	72	130	6	6	6	6	8	10	80	6	6	6	6	6	6	60	6	6	6	6	6	6
	84	130	6	6	6	6	10	12	80	6	6	6	6	6	8	60	6	6	6	6	6	6
	96	113	6	6	6	6	10	14	80	6	6	6	6	8	10	60	6	6	6	6	6	8
	104	97	6	6	6	6	10	12	80	6	6	6	6	8	10	60	6	6	6	6	6	8
60	60	130	6	6	6	6	6	8	80	6	6	6	6	6	6	60	6	6	6	6	6	6
	72	130	6	6	6	6	8	10	80	6	6	6	6	6	8	60	6	6	6	6	6	6
	84	124	6	6	6	6	10	14	80	6	6	6	6	6	8	60	6	6	6	6	6	6
	96	102	6	6	6	6	10	14	80	6	6	6	6	8	10	60	6	6	6	6	6	8
66	60	130	6	6	6	6	6	8	80	6	6	6	6	6	6	60	6	6	6	6	6	6
	72	130	6	6	6	6	8	12	80	6	6	6	6	6	8	60	6	6	6	6	6	6
	84	120	6	6	6	6	10	14	80	6	6	6	6	6	10	60	6	6	6	6	6	8
	93	102	6	6	6	6	10	14	80	6	6	6	6	8	10	60	6	6	6	6	6	8
72	60	130	6	6	6	6	6	8	80	6	6	6	6	6	6	60	6	6	6	6	6	6
	72	130	6	6	6	6	8	12	80	6	6	6	6	6	8	60	6	6	6	6	6	6
	84	117	6	6	6	6	10	14	80	6	6	6	6	6	10	60	6	6	6	6	6	8
	91	102	6	6	6	6	10	14	80	6	6	6	6	8	10	60	6	6	6	6	6	8
84	60	130	6	6	6	6	6	8	80	6	6	6	6	6	6	60	6	6	6	6	6	6
	72	130	6	6	6	6	8	12	80	6	6	6	6	6	8	60	6	6	6	6	6	6
	84	114	6	6	6	6	10	14	80	6	6	6	6	8	10	60	6	6	6	6	6	8
	86	110	6	6	6	6	10	14	80	6	6	6	6	8	10	60	6	6	6	6	6	8
96	60	130	6	6	6	6	6	8	80	6	6	6	6	6	6	60	6	6	6	6	6	6
	72	130	6	6	6	6	8	12	80	6	6	6	6	6	8	60	6	6	6	6	6	6
	75	130	6	6	6	6	8	12	80	6	6	6	6	6	8	60	6	6	6	6	6	6
108	60	130	6	6	6	6	6	8	80	6	6	6	6	6	6	60	6	6	6	6	6	6
	67	130	6	6	6	6	8	10	80	6	6	6	6	6	6	60	6	6	6	6	6	6
120	60	130	6	6	6	6	6	8	80	6	6	6	6	6	6	60	6	6	6	6	6	6
144	50	130	6	6	6	6	6	6	80	6	6	6	6	6	6	60	6	6	6	6	6	6

EXAMPLE:
ANCHORAGE TYPE A, B, C OR D
AS PER SHEET 7 WITH 1/2" SHIM
OF ANCHORS / CLUSTER: 8
SIZE: 108X67 - MULL SPAN: 67"
MAX. PRESSURE TABLE 3: 130 PSF

EXAMPLE: ANCHORAGE TYPE C
AS PER SHEET 7 WITH 1/4" SHIM
OF ANCHORS / CLUSTER: 6
SIZE: 108X67 - MULL SPAN: 67"
MAX. PRESSURE: 60 PSF

USE MW=A AND FH=B ON TABLE 1. 1
TO CALCULATE THE MAXIMUM ANCHOR
SPACING (S) BETWEEN CLUSTERS

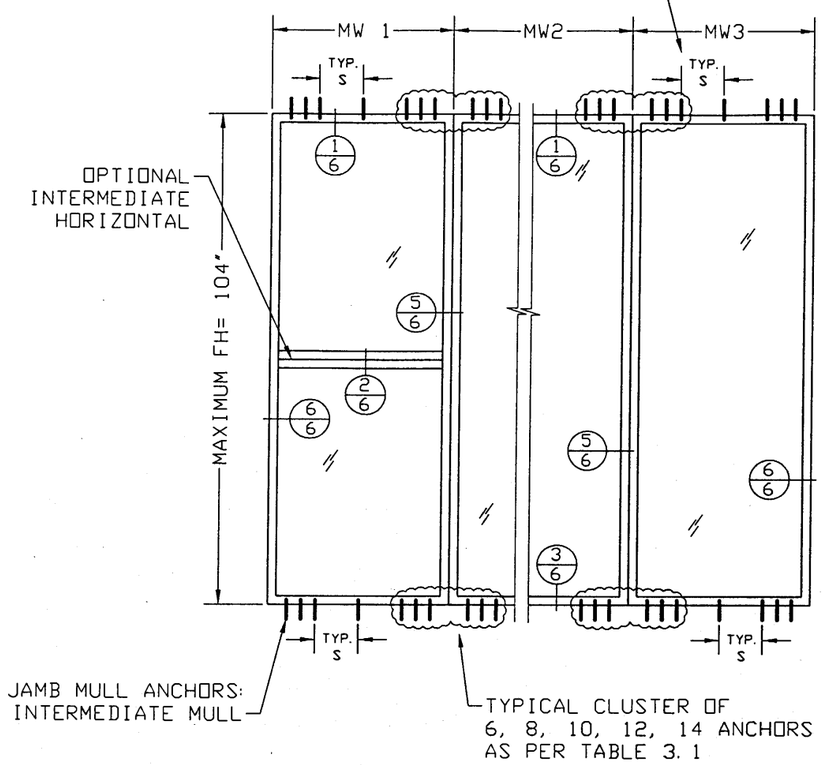

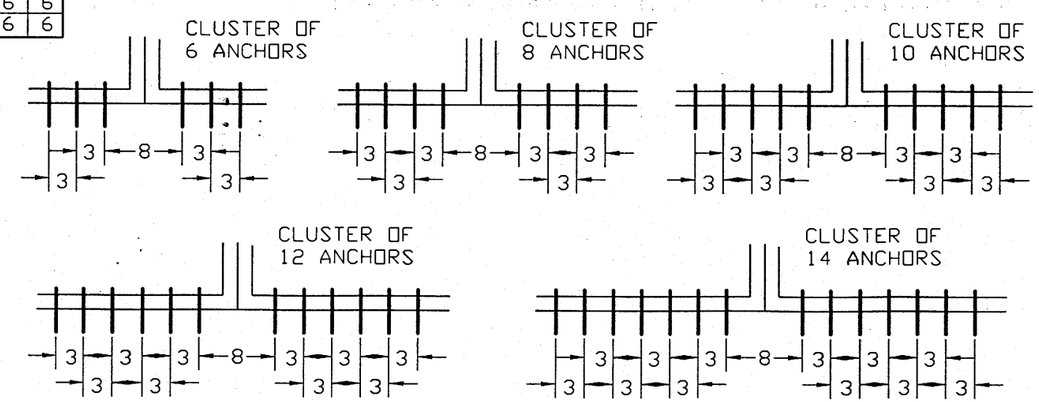

NOTES:
1- IN LOCATIONS WHERE ANCHORS ARE PLACED IN CLUSTERS, ANCHOR TYPE E, IS DESIGNED FOR 3/4" CANTILEVER CONSIDERING THE 1X JUST AS A FILLER. ALL OTHER LOCATIONS 1X BUCK MUST BE PROPERLY SECURED TO THE SUBSTRATE AND IN COORDINATION WITH FRAMING ANCHORAGE.
2- MAXIMUM SHIM SPACING FOR ANCHOR TYPES A, B, C, D OR E IS 1/4"
3- "*": ANCHORS TYPE A, B, C OR D WITH SHIM SPACING GREATER THAN 1/4" BUT LESS OR EQUAL 1/2".

ANCHOR OPTIONS:
A- 1/4" ss ITW TAPCON 1-1/4" DIRECTLY INTO 3000 PSI CONCRETE
B- 1/4" ss ITW TAPCON 1-1/4" DIRECTLY INTO MASONRY
C- 1/4" ss ITW TAPCON OR 1/4" ss SMS 1 1/2" DIRECTLY INTO MIN. 2X WOOD STRUCTURE (SG>=0. 55)
D- 1/4" ss SMS DIRECTLY INTO MIN. 1/8" METAL STRUCTURE (6063-T5 ALUM. OR ASTM A36 STEEL)
E- ALL ANCHORS ABOVE INSTALLED THROUGH 1X PT INTO MAIN STRUCTURE

HMC
HURRICANE MANUFACTURING CORPORATION
11850 MIRAMAR PARKWAY
MIRAMAR - FL. - 33025
Phone: (954) 392-7933
Fax: (954) 392-7356

PRODUCT:
HMC 1000
LM SERIES
ALUMINUM STOREFRONT

Engineering:
EngCo Inc.
CA 8116
5595 Orange Dr. 201
Davie, FL 33314

PEDRO M. DE FIGUEIREDO
LICENSE No. 52609
STATE OF FLORIDA
PROFESSIONAL ENGINEER
JAN 11 2011
Engineer Seal
Pedro M. Figueiredo
PE 52609

DRAFTING:
PK DRAFTING & MORE

MIAMI-DADE BCCO:

PRODUCT REVISED
as complying with the Florida Building Code
Acceptance No 11-0118.03
Expiration Date Oct. 20, 2015
By Manuel Sera
Miami Dade Product Control

Date: 01/11/11
Scale: NA
Design by: PPMF

Drawing Number
11-004

SHEET
10 of 12

WINDOW COMPONENTS

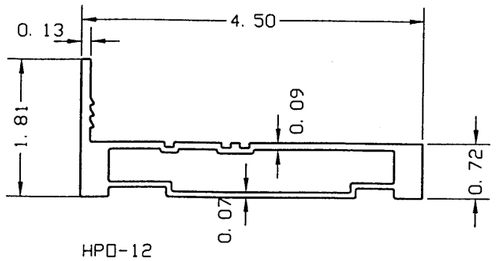

HPO-12
PERIMETER FRAMING
ALLOY: 6063-T6

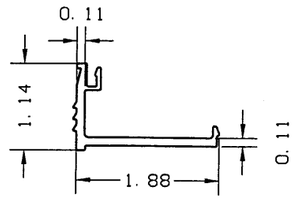

HPO-13
GLAZING STOP
ALLOY: 6063-T6

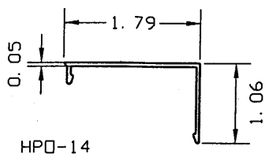

HPO-14
SNAP COVER
ALLOY: 6063-T5

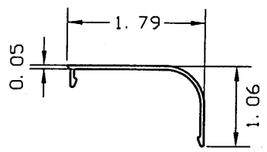

HPO-14R
ROUND SNAP COVER
ALLOY: 6063-T5

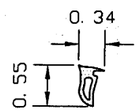

HPO-G1
GLAZING GASKET

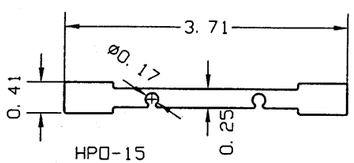

HPO-15
SHEAR CLIP
ALLOY: 6005-T5

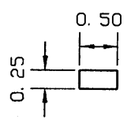

HPO-16
CONNECTING
MULLIONS BARS
ALLOY: 6063-T6

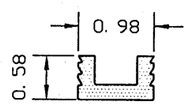

HPO-G2 9/16"
GLAZING GASKET

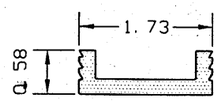

HPO-G3 1 5/16"
GLAZING GASKET

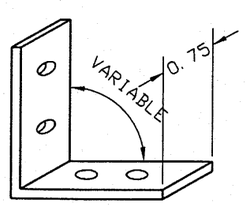

HPO-17
1/8-2X2X3/4"
CORNER CLIP WITH
(4) #10-32X1/2" SCREWS
ALLOY: 6063-T5

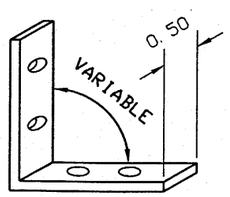

HPO-17A
1/8-2X2X1/2"
CORNER CLIP WITH
(4) #10-32X1/2" SCREWS
ALLOY: 6063-T5

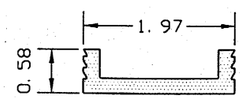

HPO-G4 1 9/16"
GLAZING GASKET

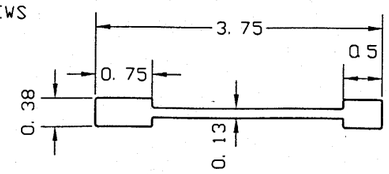

HPO-16HD - CONNECTING
MULLIONS BARS
ALLOY: 6063-T6

FRAME ASSEMBLY

WINDOW TYPE III
INTERMEDIATE HORIZONTAL ASSEMBLY

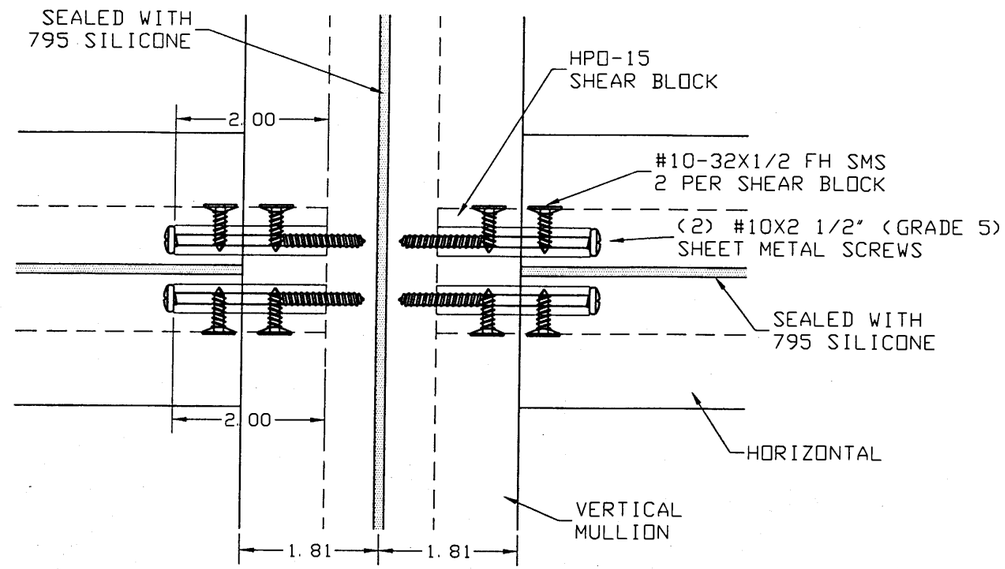

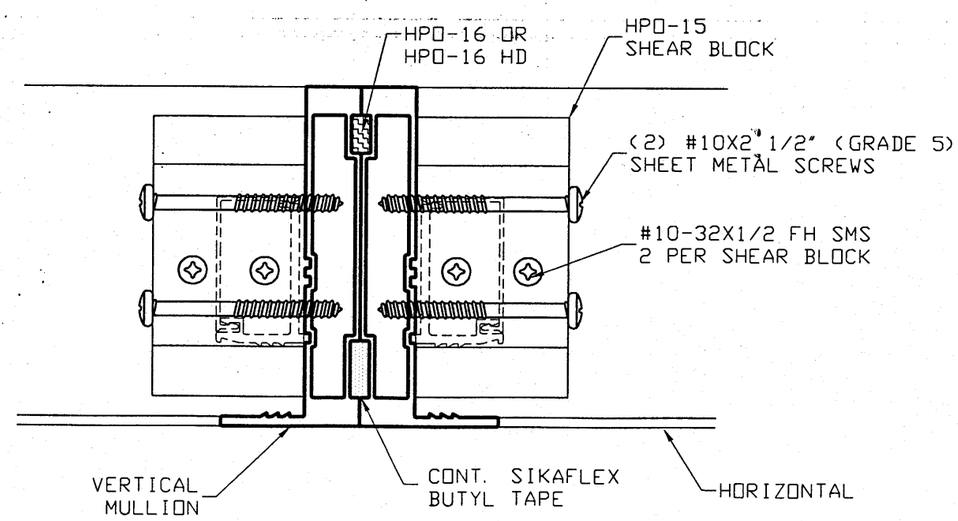

H M C

HURRICANE
MANUFACTURING
CORPORATION

11850 MIRAMAR PARKWAY
MIRAMAR - FL. - 33025
Phone: (954) 392-7933
Fax: (954) 392-7356

PRODUCT:
HMC 1000
LM SERIES
ALUMINUM STOREFRONT

Engineering:
EngCo Inc.
CA 8116
5595 Orange Dr. 201
Davie, Fl. 33314
ENGCO@AOL.COM

PEDRO A. DE FIGUEIREDO
LICENSE
No. 52609
STATE OF FLORIDA
PROFESSIONAL ENGINEER
Engineer Seal
Pedro De Figueiredo
01/12/2011

DRAFTING:
PK DRAFTING & MORE

MIAMI-DADE BCCO:

PRODUCT REVISED
as complying with the Florida
Building Code
Acceptance No 11-0118.03
Expiration Date 03.20.2015
By Manuel Perez
Miami Dade Product Control

Date: 01/11/11
Scale: NA
Design by: PPMF

Drawing Number
11-004

SHEET
11 of 12

FRAME ASSEMBLY

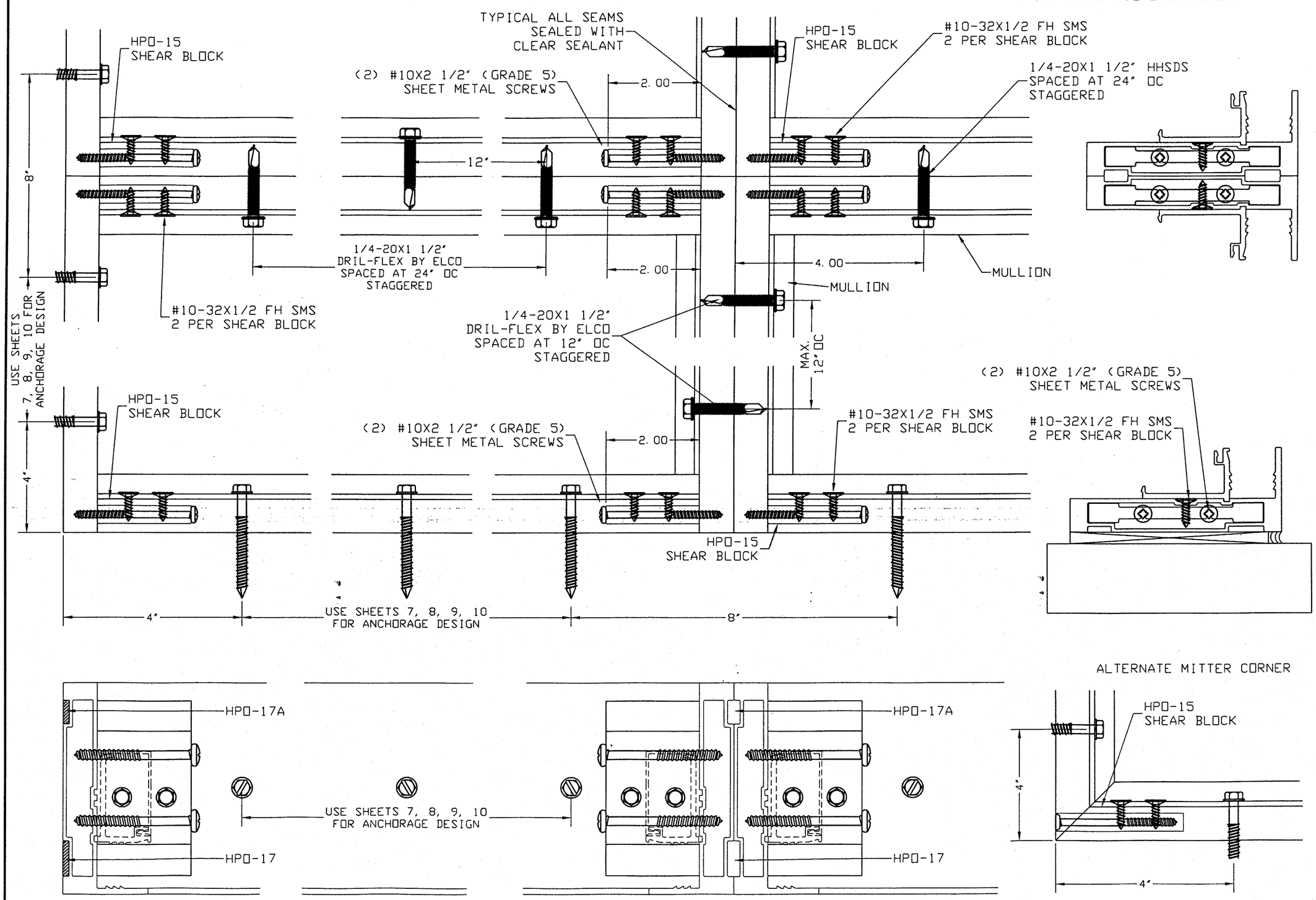

H M C

HURRICANE
MANUFACTURING
CORPORATION

11850 MIRAMAR PARKWAY
MIRAMAR - FL. - 33025
Phone: (954) 392-7933
Fax: (954) 392-7356

PRODUCT:
HMC 1000
LM SERIES
ALUMINUM STOREFRONT

Engineering:
EngCo Inc.
CA 8116
5595 Orange Dr. 201
Davie, FL 33314
ENGCO@AOL.COM

PEDRO M. FIGUEIREDO
LICENSE
No. 52609
STATE OF FLORIDA
PROFESSIONAL ENGINEER
JAN 11 2011
Engineer Seal
Pedro De Figueiredo
PE 52609

DRAFTING:
PK DRAFTING & MORE

MIAMI-DADE BCCO:

PRODUCT REVISED
as complying with the Florida
Building Code
Acceptance No 11-0118.03
Expiration Date 2.20.2015
By
Miami Dade Product Control

Date: 01/11/11
Scale: NA
Design by: PPMF

Drawing Number
11-004

SHEET
12 of 12

RECEIVED
11 JAN 13 AM 7:09
BUILDING CODE
COMPLIANCE DEPARTMENT
PROJECT CONTROL SECTION