MIAMI-DADE COUNTY

BUILDING AND NEIGHBORHOOD COMPLIANCE DEPARTMENT (BNC)
BOARD AND CODE ADMINISTRATION DIVISION

MIAMI-DADE COUNTY
PRODUCT CONTROL SECTION
11805 SW 26 Street, Room 208
Miami, Florida 33175-2474
T (786) 315-2590 F (786) 315-2599
www.miamidade.gov/building/

NOTICE OF ACCEPTANCE (NOA)

Duro-Last Roofing, Inc.
525 Morley Drive
Saginaw, MI. 48601

SCOPE:

This NOA is being issued under the applicable rules and regulations governing the use of construction materials. The documentation submitted has been reviewed by Miami-Dade County Product Control Section and accepted by the Board of Rules and Appeals (BORA) to be used in Miami Dade County and other areas where allowed by the Authority Having Jurisdiction (AHJ).

This NOA shall not be valid after the expiration date stated below. The Miami-Dade County Product Control Section (In Miami Dade County) and/or the AHJ (in areas other than Miami Dade County) reserve the right to have this product or material tested for quality assurance purposes. If this product or material fails to perform in the accepted manner, the manufacturer will incur the expense of such testing and the AHJ may immediately revoke, modify, or suspend the use of such product or material within their jurisdiction. BORA reserves the right to revoke this acceptance, if it is determined by Miami-Dade County Product Control Section that this product or material fails to meet the requirements of the applicable building code.
This product is approved as described herein, and has been designed to comply with the Florida Building Code including the High Velocity Hurricane Zone of the Florida Building Code.

DESCRIPTION: EM DMC 150 SS- .032" Aluminum Panel over Plywood deck

LABELING: Each unit shall bear a permanent label with the manufacturer's name or logo, city, state and following statement: "Miami-Dade County Product Control Approved", unless otherwise noted herein.

RENEWAL of this NOA shall be considered after a renewal application has been filed and there has been no change in the applicable building code negatively affecting the performance of this product.

TERMINATION of this NOA will occur after the expiration date or if there has been a revision or change in the materials, use, and/or manufacture of the product or process. Misuse of this NOA as an endorsement of any product, for sales, advertising or any other purposes shall automatically terminate this NOA. Failure to comply with any section of this NOA shall be cause for termination and removal of NOA.

ADVERTISEMENT: The NOA number preceded by the words Miami-Dade County, Florida, and followed by the expiration date may be displayed in advertising literature. If any portion of the NOA is displayed, then it shall be done in its entirety.

INSPECTION: A copy of this entire NOA shall be provided to the user by the manufacturer or its distributors and shall be available for inspection at the job site at the request of the Building Official.

This NOA consists of pages 1 through 8.
The submitted documentation was reviewed by Alex Tigera.

MIAMI-DADE COUNTY APPROVED

ROOFING SYSTEM APPROVAL:

Category:	Roofing
Sub-Category:	Metal, Panels (Non-Structural)
Material:	Aluminum
Deck Type:	Wood
Maximum Design Pressure	**-106.75 psf**

TRADE NAMES OF PRODUCTS MANUFACTURED OR LABELED BY APPLICANT:

Product	Dimensions	Test Specifications	Product Description
EM DMC 150 SS – .032 Aluminum Panel	Length: various Height: 1-1/2" Width: 16" Thickness .032"	TAS 110	Aluminum standing seam metal panel.
Panel Clip	Length: 3/4" Height: 1-5/8" Width: 2" Thickness: 26ga		Stainless steel panel clip used for the field conditions of EM DMC 150 SS panel assembly.
Continuous Clip	Base: Length: 120" Height: 1-1/4" Width: 1" Thickness: 24ga Upper Clip: Length: 5.045" Height: 0.929" Width: 0.40" Thickness: 26ga		Two piece panel clip (base and upper clip) used for the perimeter and corner conditions of EM DMC 150 SS panel assembly.

EVIDENCE SUBMITTED:

Test Agency	Test Identifier	Test Name/Report	Date
Akzo Nobel Coatings, Inc.	Lab Form	ASTM G 153	
PRI Asphalt Technologies, Inc.	AKZC-001-02-01 AKZC-001-02-02 AKZC-001-02-03 AKZC-001-02-04 AKZC-001-02-05	ASTM B 117	10/08/02
Architecural Testing	56842.01-122-18	TAS 125	08/03/05
Architecural Testing	56842.02-122-18	TAS 100	08/02/05
Hurricane Test Laboratory, Inc.	0287-0513-07	TAS 125	05/10/07

APPROVED ASSEMBLIES:

System:	150 Standing Seam .032" Aluminum 16" wide Panel
Deck Type:	Wood, Non-insulated
Deck Description:	New Construction $^{19}/_{32}$" or greater plywood or wood plank.
Slope Range:	2": 12" or greater
Maximum Uplift Pressure:	**See Table A below**

Deck Attachment:	In accordance with applicable Building Code, but in no case shall it be less than 8d annular ring shank nails spaced 6" o.c. In reroofing, where the deck is less than $^{19}/_{32}$" thick (Minimum $^{15}/_{32}$") The above attachment method must be in addition to existing attachment.
Underlayment:	Minimum underlayment shall be an ASTM D 226 Type II installed with a minimum 4" side-lap and 6" end-laps. Underlayment shall be fastened with corrosion resistant tin-caps and 12 gauge 1 ¼" annular ring-shank nails, spaced 6" o.c. at all laps and two staggered rows 12" o.c. in the field of the roll or any approved underlayment having a current NOA.
Fire Barrier Board:	Any approved fire barrier having a current NOA. Refer to a current fire directory listing for fire ratings of this roofing system assembly as well as the location of the fire barrier within the assembly. See Limitation # 1.
Valleys:	Valley construction shall be in compliance with Roofing Application Standard RAS 133 and with the current published installation instructions and details in DMC Association of Regional Manufacturers Installation Manual.
Metal Panels and Accessories:	Install the "150 Standing Seam .032" Aluminum Panel" panels including flashing penetrations, valleys, end laps and accessories in compliance "DMC Association of Regional Manufacturers" current, published installation instructions and in compliance with the minimum requirements detailed in Roofing Application Standard RAS 133.
Field Conditions:	Panels shall be secured along the male rib with approved panel clip with two corrosion resistant #10 pancake head fasteners of sufficient length to penetrate through the sheathing a minimum of $^{3}/_{16}$". The panel clips were placed at a spacing listed of 12" on center starting 3" from panel end. The female rib of panel is placed over the male/clip assembly and seamed 180°. See Detail A herein.
Maximum Design Pressure (Field):	**-71.25 psf (see General Limitation #2).**

Perimeter and Corner Conditions:	Panels shall be secured along the male rib with approved continuous clip with two corrosion resistant #10 pancake head fasteners of sufficient length to penetrate through the sheathing a minimum of $^{3}/_{16}$" 3" from clip end, then alternating between 1 screw and 2 screws every 6" o.c. The upper clip placement along the continuous clip is at 6" o.c. The female rib of panel is placed over the male/clip assembly and seamed 180°. See Detail B herein.
Maximum Design Pressure (Perimeter and Corner):	**-106.75 psf (see General Limitation #2).**

LIMITATIONS

1. Fire classification is not part of this acceptance; refer to a current Approved Roofing Materials Directory for fire ratings of this product.

2. The maximum designed pressure listed herein shall be applicable to all roof pressure zones (i.e. field, perimeters, and corners). Neither rational analysis, nor extrapolation shall be permitted for enhanced fastening at enhanced pressure zones (i.e. perimeters, extended corners and corners).

3. Panels may be rolls formed in continuous lengths from eave to ridge. Maximum lengths shall be as described in Roofing Application Standard RAS 133

4. All panels shall be permanently labeled with the manufacturer's name and/or logo, and the following statement: "Miami-Dade County Product Control Approved" **or** with the Miami-Dade County Product Control Seal as seen below. All clips shall be permanently labeled with the manufacturer's name and/or logo, and/or model.

MIAMI-DADE COUNTY
APPROVED

5. All products listed herein shall have a quality assurance audit in accordance with the Florida Building Code and Rule 9B-72 of the Florida Administrative Code.

6. Panels may be jobsite roll formed with machine model **#SSQ1661210** from DMC Association of Regional Manufacturers.

PROFILE DRAWINGS

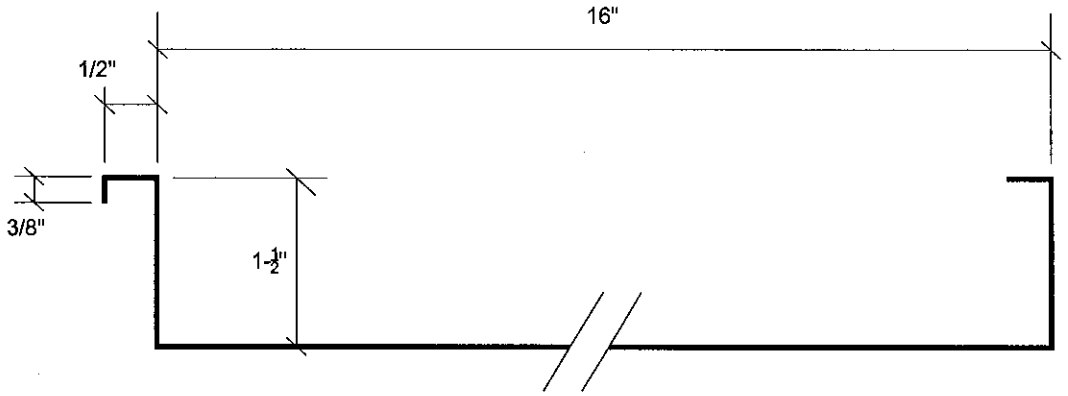

EM DCM 150 SS .032" ALUMINUM PANEL

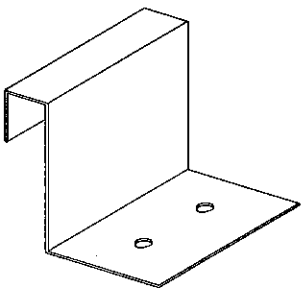

PANEL CLIP

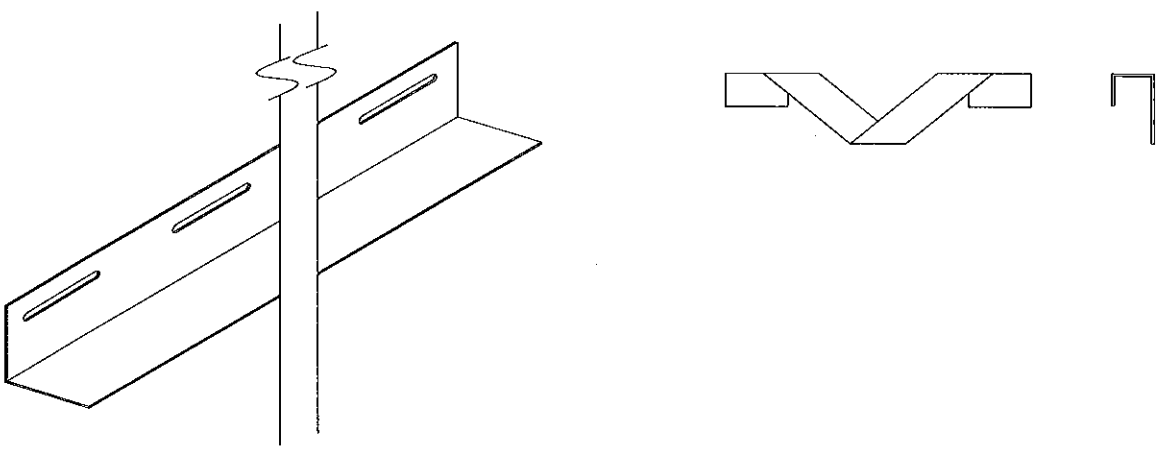

CONTINUOUS CLIP

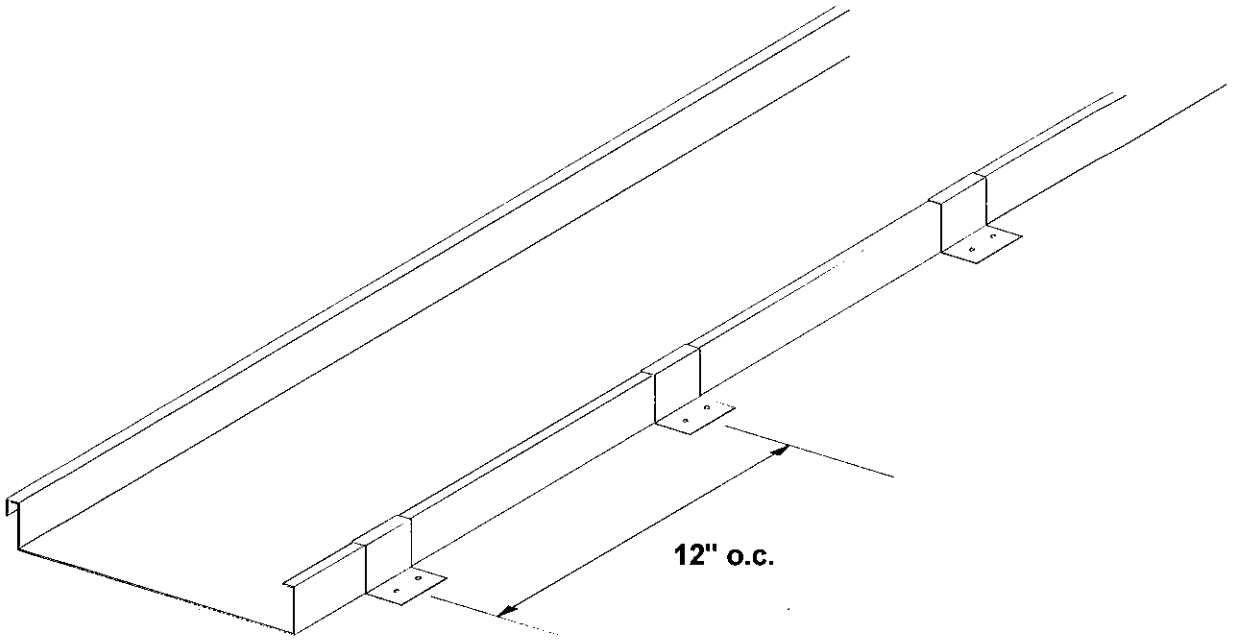

Detail A
(Field Conditions)

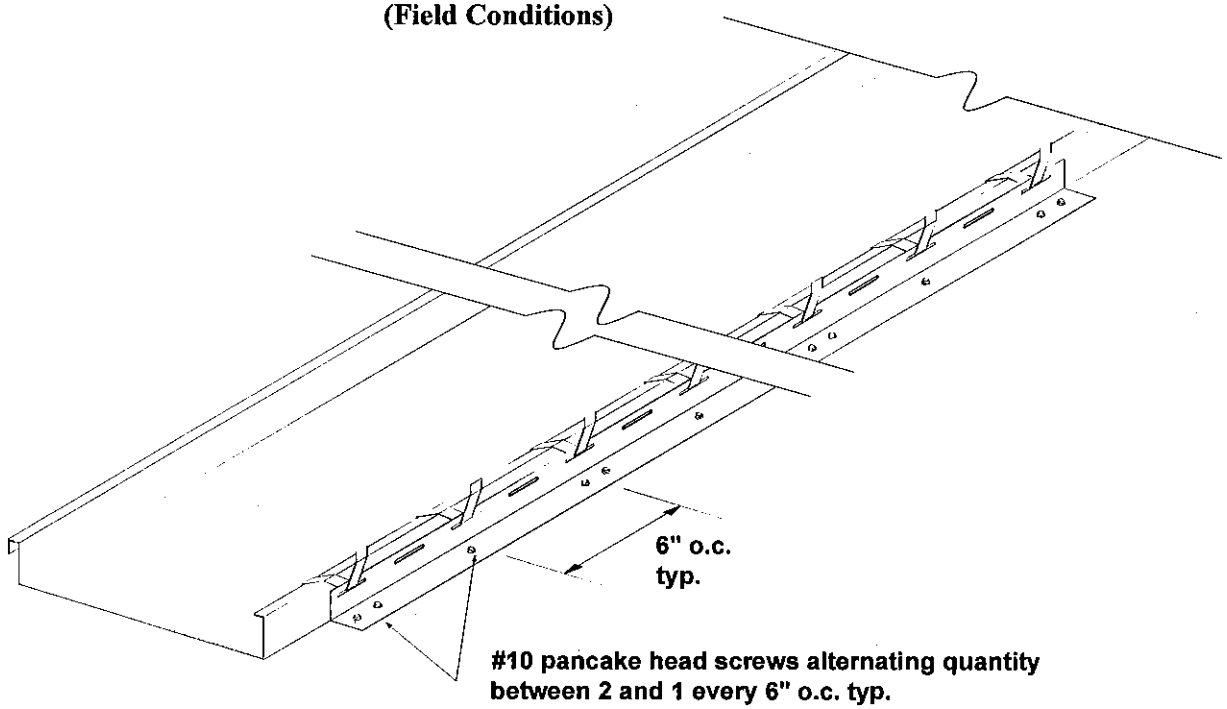

Detail B
(Perimeter and Corner Conditions)

END OF THIS ACCEPTANCE