MIAMI-DADE COUNTY
BUILDING AND NEIGHBORHOOD COMPLIANCE DEPARTMENT (BNC)
BOARD AND CODE ADMINISTRATION DIVISION

MIAMI-DADE COUNTY
PRODUCT CONTROL SECTION
11805 SW 26 Street, Room 208
Miami, Florida 33175-2474
T (786) 315-2590 F (786) 315-2599
www.miamidade.gov/building

NOTICE OF ACCEPTANCE (NOA)

DAB Door Company, Inc.
12195 NW 98th Avenue
Hialeah Gardens, FL 33018

SCOPE:

This NOA is being issued under the applicable rules and regulations governing the use of construction materials. The documentation submitted has been reviewed by Miami-Dade County Product Control Section and accepted by the Board of Rules and Appeals (BORA) to be used in Miami Dade County and other areas where allowed by the Authority Having Jurisdiction (AHJ).

This NOA shall not be valid after the expiration date stated below. The Miami-Dade County Product Control Section (In Miami Dade County) and/or the AHJ (in areas other than Miami Dade County) reserve the right to have this product or material tested for quality assurance purposes. If this product or material fails to perform in the accepted manner, the manufacturer will incur the expense of such testing and the AHJ may immediately revoke, modify, or suspend the use of such product or material within their jurisdiction. BORA reserves the right to revoke this acceptance, if it is determined by Miami-Dade County Product Control Section that this product or material fails to meet the requirements of the applicable building code.

This product is approved as described herein, and has been designed to comply with the Florida Building Code, including the High Velocity Hurricane Zone.

DESCRIPTION: 9'-4"Wide x 16'High Steel Sectional Garage Door w/ Window Lite Option

APPROVAL DOCUMENT: Drawing No. **01-05**, titled "Sectional Garage Door", dated 01/19/01, with last revision D dated 12/24/08, sheets 1 through 5 of 5, prepared by Al-Farooq Corporation, signed and sealed by Javad Ahmad, P.E., bearing the Miami-Dade County Product Control renewal stamp with the Notice of Acceptance number and expiration date by the Miami-Dade County Product Control Section.

MISSILE IMPACT RATING: Large and Small Missile Impact Resistant

LABELING: Each unit shall bear a permanent label with the manufacturer's name or logo, city, state and following statement: "Miami-Dade County Product Control Approved", unless otherwise noted herein.

RENEWAL of this NOA shall be considered after a renewal application has been filed and there has been no change in the applicable building code negatively affecting the performance of this product.

TERMINATION of this NOA will occur after the expiration date or if there has been a revision or change in the materials, use, and/or manufacture of the product or process. Misuse of this NOA as an endorsement of any product, for sales, advertising or any other purposes shall automatically terminate this NOA. Failure to comply with any section of this NOA shall be cause for termination and removal of NOA.

ADVERTISEMENT: The NOA number preceded by the words Miami-Dade County, Florida, and followed by the expiration date may be displayed in advertising literature. If any portion of the NOA is displayed, then it shall be done in its entirety.

INSPECTION: A copy of this entire NOA shall be provided to the user by the manufacturer or its distributors and shall be available for inspection at the job site at the request of the Building Official.

This NOA **renews NOA # 09-0128.05** and consists of this page 1 and evidence pages E-1 and E-2, as well as approval document mentioned above.

The submitted documentation was reviewed by **Carlos M. Utrera, P.E.**

MIAMI-DADE COUNTY APPROVED

03/08/11

NOA No. 11-0118.19
Expiration Date: October 4, 2016
Approval Date: March 31, 2011

NOTICE OF ACCEPTANCE: EVIDENCE SUBMITTED

A. DRAWINGS

1. Drawing No. **01-05**, titled "Sectional Garage Door", dated 01/19/01, with last revision D dated 12/24/08, sheets 1 through 5 of 5, prepared by Al-Farooq Corporation, signed and sealed by Javad Ahmad, P.E.

B. TESTS

1. Test report of Tensile Test per ASTM E 8, Report No. **HETI 08-T182**, prepared by Hurricane Engineering & Testing, Inc., dated 12/23/08, signed and sealed by Candido F. Font, P.E. ***"Submitted under NOA # 09-0128.05"***
2. Test reports on 1) Uniform Static Air Pressure Test Loading per FBC TAS 202-94
   2) Large Missile Impact Test per FBC, TAS 201-94
   3) Cyclic Wind Pressure Loading per FBC, TAS 203-94
   4) Forced Entry Test per FBC 2411 3.2.1, TAS 202-94

   along with marked-up drawings and installation diagram of a DAB 824 24 GA Sectional Garage Door with Fixed Windows, prepared by Hurricane Engineering & Testing, Inc, Test Reports No. **HETI-08-2149A/B**, dated 06/27/08, signed and sealed by Candido F. Font, P.E. ***"Submitted under NOA # 08-1106.05"***
3. Test report on Salt Spray (Corrosion) Test per ASTM B 117 of a painted G-40 steel panels, prepared by Celotex Corporation, Test Report No. **258592**, dated 08/17/98, signed by W. A. Jackson, P.E. ***"Submitted under NOA # 03-0210.04"***

C. CALCULATIONS *"Submitted under NOA # 09-0128.05"*

1. Anchor verification calculations prepared by Al-Farooq Corporation, complying with F.B.C 2007, dated 12/19/08, signed and sealed by Humayoun Farooq, P.E.

D. QUALITY ASSURANCE

1. Miami-Dade Building and Neighborhood Compliance Department (BNC)

03/08/11

Carlos M. Utrera, P.E.
Product Control Examiner
NOA No. 11-0118.19
Expiration Date: October 4, 2016
Approval Date: March 31, 2011

NOTICE OF ACCEPTANCE: EVIDENCE SUBMITTED

E. MATERIAL CERTIFICATIONS

1. Notice of Acceptance No. **08-0305.02**, issued to SABIC Innovative Plastics, for their Lexan Sheet Products, approved on 04/24/08 and expiring on 07/17/13.
2. Notice of Acceptance No. **07-1016.07**, issued to Insulfoam, LLC, for their Insulfoam Expanded Polystyrene Insulation, approved on 11/29/07 and expiring on 11/29/12.
3. Notice of Acceptance No. **07-1107.08**, issued to Dyplast Products, LLC, for their Expanded Polystyrene Block Type Insulation, approved on 04/26/07 and expiring on 08/27/08.
4. Notice of Acceptance No. **07-0301.10**, issued to Dyplast Products, LLC, for their Dyplast ISO-C1 Polyisocyanurate Insulation, approved on 06/07/07 and expiring on 01/11/12.

"Submitted under NOA # 05-0228.02"

5. Test Report on Accelerated Weathering Using Xenon Arc Light Apparatus Test per ASTM G155 of "PVC Extrusion Material", prepared by Hurricane Engineering & Testing, Inc., Report No. **HETI 04-A002**, dated 09/27/04, signed and sealed by Rafael E. Droz-Seda, P.E.
6. Test Reports on Tensile Test per ASTM D638 of "PVC Extrusion Material", prepared by Hurricane Engineering & Testing Inc., Report No. **HETI 04-T251,** dated 11/29/04 signed and sealed by I. Ghia, P.E.
7. Test Report on Self-Ignition Temperature Test, Rate of Burn Test and Smoke Density Test of "REHAU non-foam PVC extrusion material", prepared by ETC Laboratories, Report No. **04-761-15019.0**, dated 05/06/04, signed and sealed by J. L. Doldan, P.E.

F. STATEMENTS

1. Statement letter of code conformance to 2007 FBC and no financial interest, issued by Al-Farooq Corporation, dated 09/09/10, signed and sealed by Javad Ahmad, P.E.

G. OTHER

1. Notice of Acceptance No. **09-0128.05**, issued to DAB Door Company, Inc, approved on 03/25/09 and expiring on 10/04/11.

03/08/11

Carlos M. Utrera, P.E.
Product Control Examiner
NOA No. 11-0118.19
Expiration Date: October 4, 2016
Approval Date: March 31, 2011

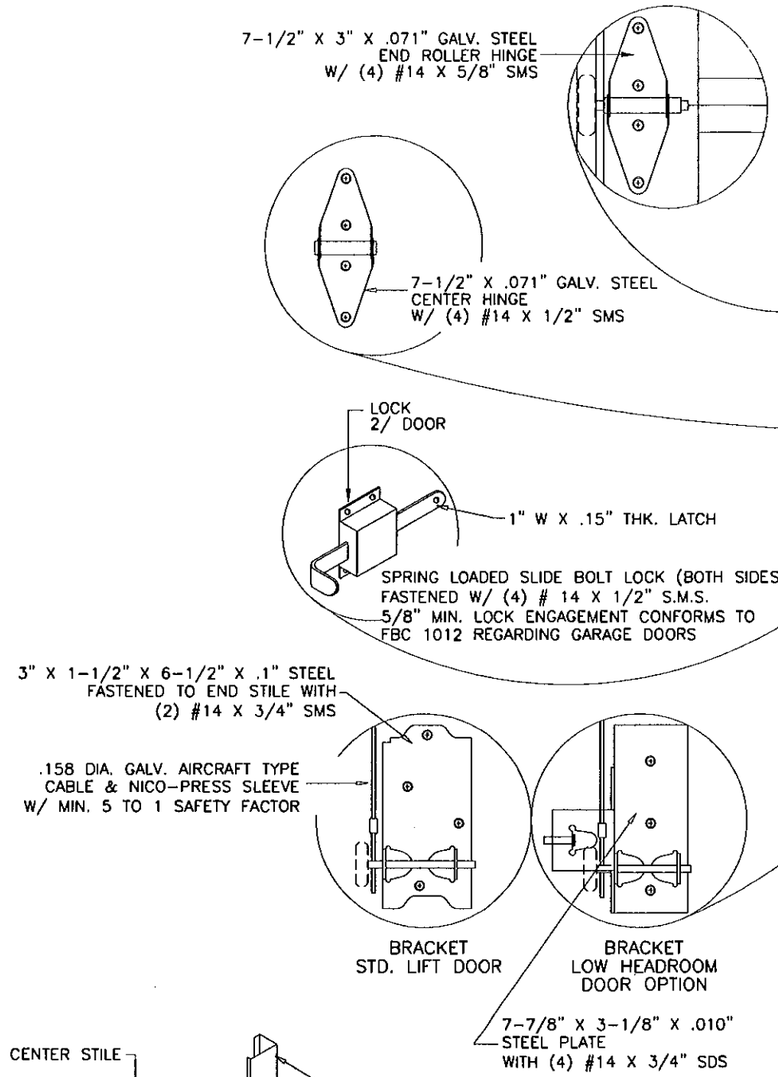

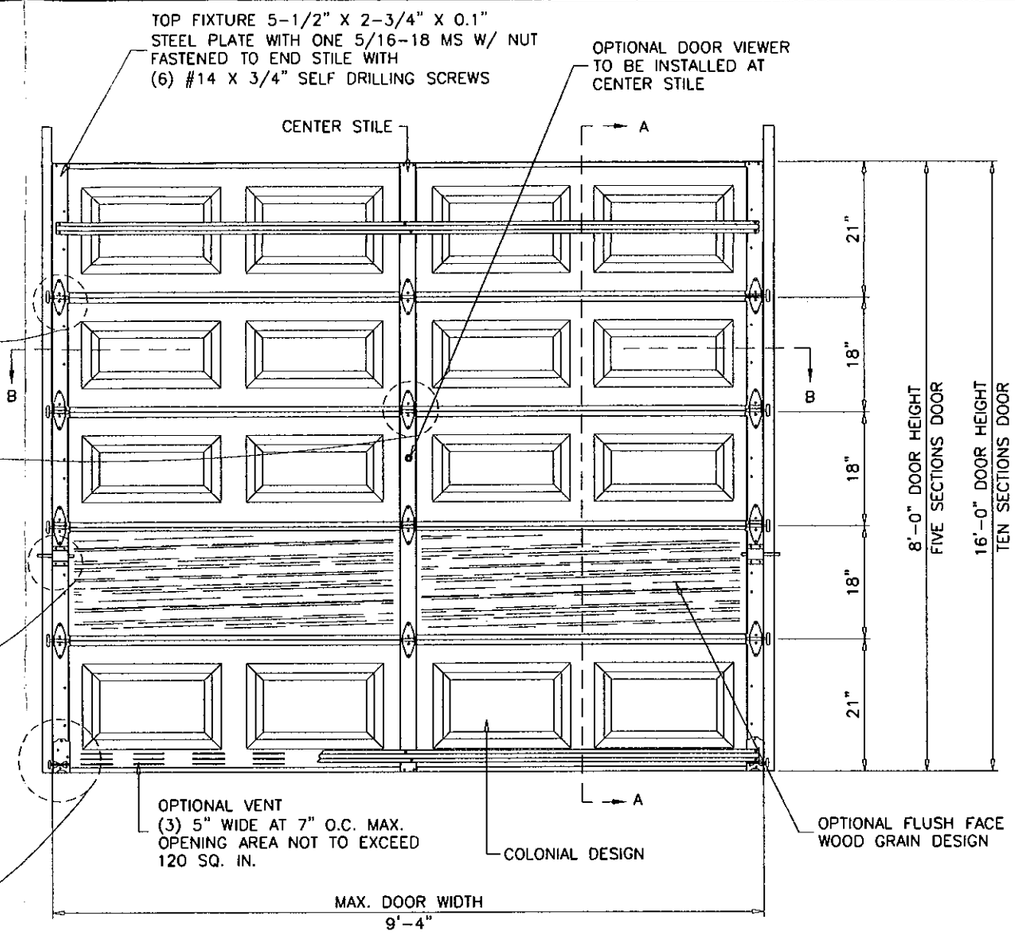

INSIDE ELEVATION
RAISED PANEL EMBOSSED DOOR

DOOR HEIGHT	CONSISTS OF	
6'-6"	2 SECTIONS 18"	2 SECTIONS 21"
6'-9"	1 SECTION 18"	3 SECTIONS 21"
7'	4 SECTIONS 21"	–
7'-3"	–	–
7'-6"	5 SECTIONS 18"	–
7'-9"	4 SECTIONS 18"	1 SECTION 21"
8'	3 SECTIONS 18"	2 SECTIONS 21"
8'-3"	2 SECTIONS 18"	3 SECTIONS 21"
8'-6"	1 SECTION 18"	4 SECTIONS 21"
8'-9"	5 SECTIONS 21"	–
9'	6 SECTIONS 18"	–
9'-3"	5 SECTIONS 18"	1 SECTION 21"
9'-6"	4 SECTIONS 18"	2 SECTIONS 21"
9'-9"	3 SECTIONS 18"	3 SECTIONS 21"
10'	2 SECTIONS 18"	4 SECTIONS 21"
10'-3"	1 SECTION 18"	5 SECTIONS 21"
10'-6"	6 SECTIONS 21"	–
10'-9"	6 SECTIONS 18"	1 SECTION 21"
11'	5 SECTIONS 18"	2 SECTIONS 21"
11'-3"	4 SECTIONS 18"	3 SECTIONS 21"
11'-6"	3 SECTIONS 18"	4 SECTIONS 21"
11'-9"	2 SECTIONS 18"	5 SECTIONS 21"
12'	1 SECTIONS 18"	6 SECTIONS 21"
12'-3"	7 SECTIONS 21"	–
12'-6"	6 SECTIONS 18"	2 SECTIONS 21"
12'-9"	5 SECTIONS 18"	3 SECTIONS 21"
13'	4 SECTIONS 18"	4 SECTIONS 21"
13'-3"	3 SECTIONS 18"	5 SECTIONS 21"
13'-6"	2 SECTIONS 18"	6 SECTIONS 21"
13'-9"	1 SECTION 18"	7 SECTIONS 21"
14'	8 SECTIONS 21"	–
14'-3"	6 SECTIONS 18"	3 SECTIONS 21"
14'-6"	5 SECTIONS 18"	4 SECTIONS 21"
14'-9"	4 SECTIONS 18"	5 SECTIONS 21"
15'	3 SECTIONS 18"	6 SECTIONS 21"
15'-3"	2 SECTIONS 18"	7 SECTIONS 21"
15'-6"	1 SECTION 18"	8 SECTIONS 21"
15'-9"	9 SECTIONS 21"	–
16'	6 SECTIONS 18"	4 SECTIONS 21"

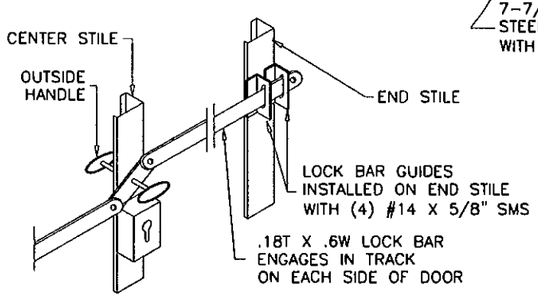

OUTSIDE KEYED LOCK
LOCK BAR LOCKING SHOWN
ALTERNATE TO LOCKS SHOWN ABOVE

DAB DOOR MODEL 824
MAX. SIZE 9'-4" WIDE X 16'-0" HIGH

MAXIMUM DESIGN LOAD RATING = + 62.0 PSF
(DOORS WITHOUT WINDOWS) – 70.0 PSF

MAXIMUM DESIGN LOAD RATING = + 55.0 PSF
(DOORS WITH WINDOWS) – 64.0 PSF

THIS PRODUCT IS RATED FOR LARGE MISSILE IMPACT

GENERAL NOTES

1. THIS PRODUCT HAS BEEN DESIGNED AND TESTED TO COMPLY WITH THE REQUIREMENTS OF THE FLORIDA BUILDING CODE 2007 EDITION INCLUDING HIGH VELOCITY HURRICANE ZONE.
2. ANCHORS SHALL BE AS LISTED, SPACED AS SHOWN ON DETAILS. ANCHOR EMBEDMENT TO BASE MATERIAL SHALL BE BEYOND WALL DRESSING OR STUCCO.
3. ALL BOLTS, NUTS AND WASHERS SHALL BE ZINC PLATED CARBON STEEL.
4. ANCHORING OR LOADING CONDITIONS OTHER THAN THOSE SHOWN IN THESE DETAILS ARE NOT PART OF THIS APPROVAL.
5. A LOAD DURATION INCREASE IS USED IN DESIGN OF ANCHORS INTO WOOD ONLY.

Engr: JAVAD AHMAD
CIVIL
FLA. PE # 70592
C.A.N. 3538

SEP 14 2010

PRODUCT RENEWED
as complying with the Florida Building Code
Acceptance No 11-0119.19
Expiration Date 10/04/2016
By
Miami/Dade Product Control

AL-FAROOQ CORPORATION
ENGINEERS & PRODUCT DEVELOPMENT
1235 S.W. 87 AVE
MIAMI, FLORIDA 33174
TEL. (305) 264-8100 FAX. (305) 262-6978

GARAGE\01-05DAB

SECTIONAL GARAGE DOOR

DAB DOORS INC.
12195 N.W. 98 TH. AVE.
HIALEAH GARDENS, FL. 33018
TEL. (305) 556 - 6624

revisions:

no	date	by	description
A	07.11.01		REV. PER BCCO COMMENTS
B	08.11.05		UPDATED FOR 2004 FBC
C	02.28.06		REV. PER BCCO COMMENTS
D	12.24.08		UPDATED FOR 2007 FBC

date: 01-19-01
scale: 1/2"=1'-0"
dr. by: HAMID
chk. by:

drawing no.
01-05

sheet 1 of 5

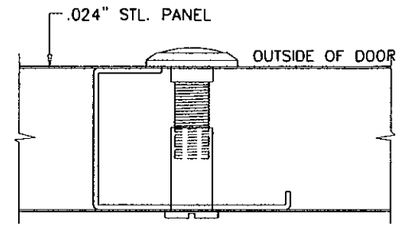

SOLID BRASS DOOR VIEWER
BY 'SCHLAGE SECURITY HARDWARE'
INSTALLED IN 9/16" DIA. HOLES IN CENTER STILE
POSITIONED AT EYE LEVEL

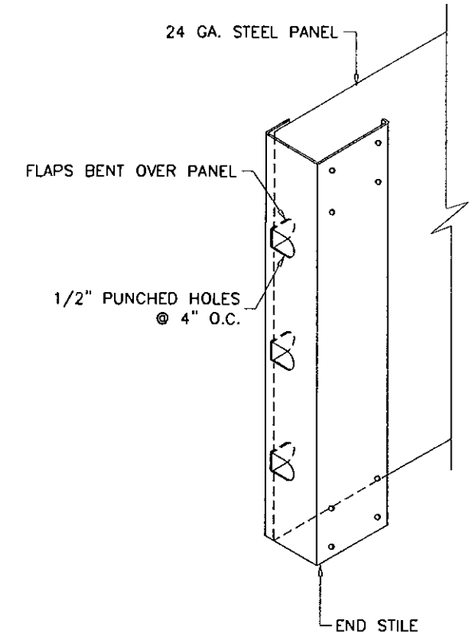

ANCHORS:

A) 3/8" DIA. POWER-BOLT BY 'POWERS'
2" MIN. EMBED INTO CONCRETE
1-7/8" MIN. EDGE DISTANCE

B) 3/8" DIA. HLC SLEEVE BY 'HILTI'
1-1/4" MIN. EMBED INTO CONCRETE OR FILLED BLOCK
1-5/8" MIN. EDGE DISTANCE INTO CONCRETE
4" MIN. EDGE DISTANCE INTO FILLED BLOCK

CONCRETE f'c = 3000 PSI MIN.
C-90 GROUT FILLED BLOCK f'm = 2000 PSI MIN.

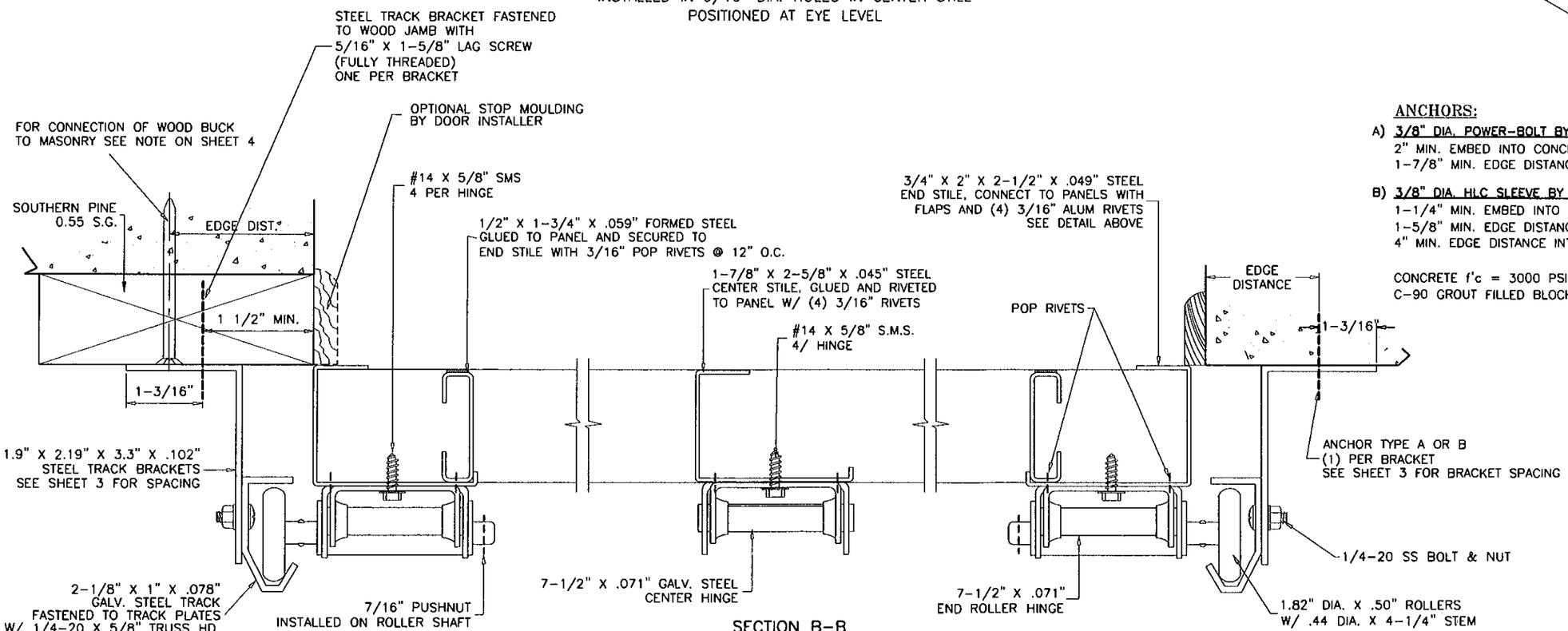

SECTION B-B

INTERIOR SIDE

Engr.: JAVAD AHMAD
CIVIL
FLA. PE # 70592
C.A.N. 3538

SEP 14 2010

PRODUCT RENEWED
as complying with the Florida
Building Code
Acceptance No 11-0118.19
Expiration Date 10/04/2016
By
Miami-Dade Product Control

AL-FAROOQ CORPORATION
ENGINEERS & PRODUCT DEVELOPMENT
1235 S.W. 87 AVE
MIAMI, FLORIDA 33174
TEL. (305) 264-8100 FAX. (305) 262-6978

GARAGE\01-05DAB

SECTIONAL GARAGE DOOR

DAB DOORS INC.
12195 N.W. 98 TH. AVE.
HIALEAH GARDENS, FL. 33018
TEL. (305) 556 - 6624

revisions:

no	date	by	description
B	08.11.05		ANCHORS REV.
C	02.28.06		REV. PER BCCO COMMENTS
D	12.24.08		UPDATED FOR 2007 FBC

date: 01-19-01
scale: -
dr. by: HAMID
chk. by:

drowing no.
01-05

sheet 2 of 5

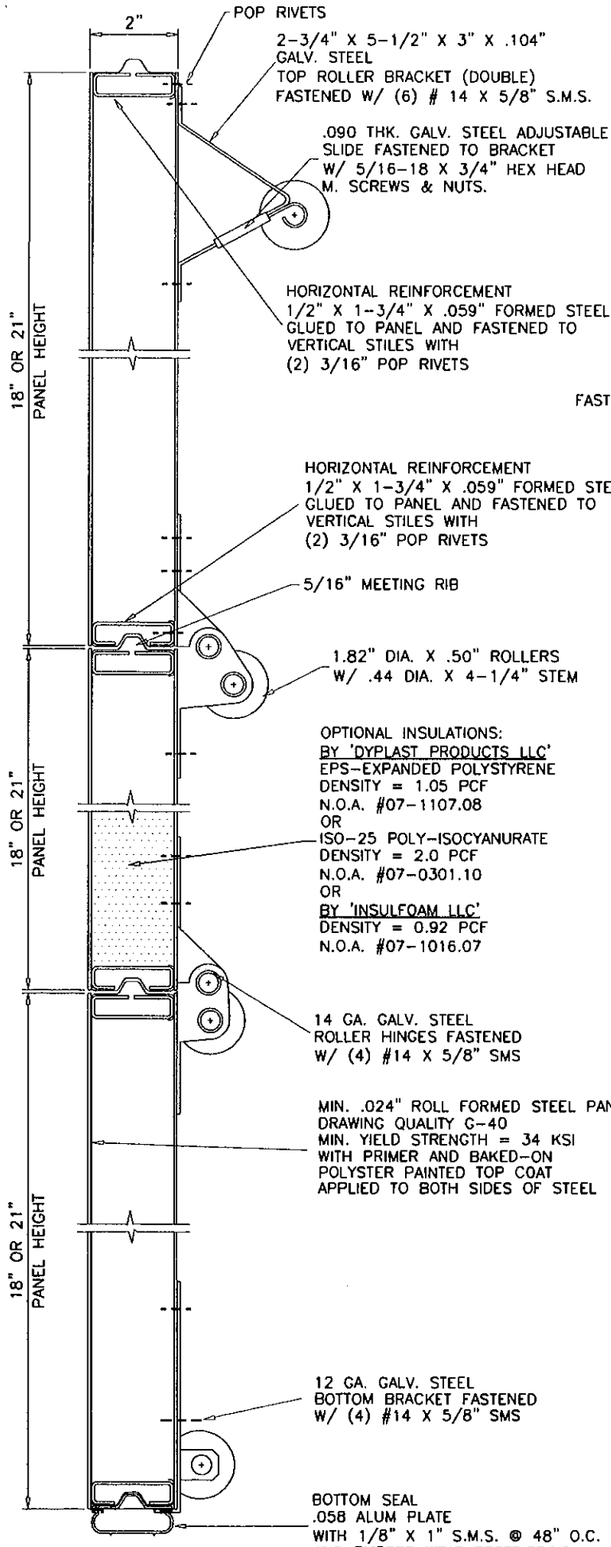

SECTION A-A

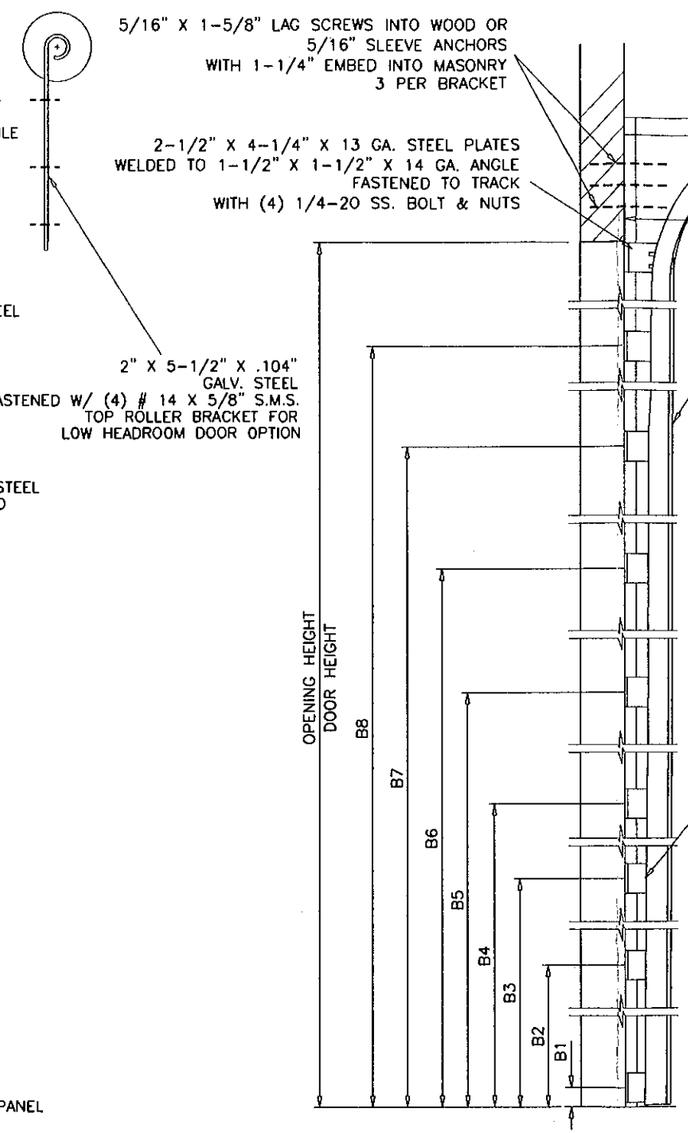

TRACK CONFIGURATION

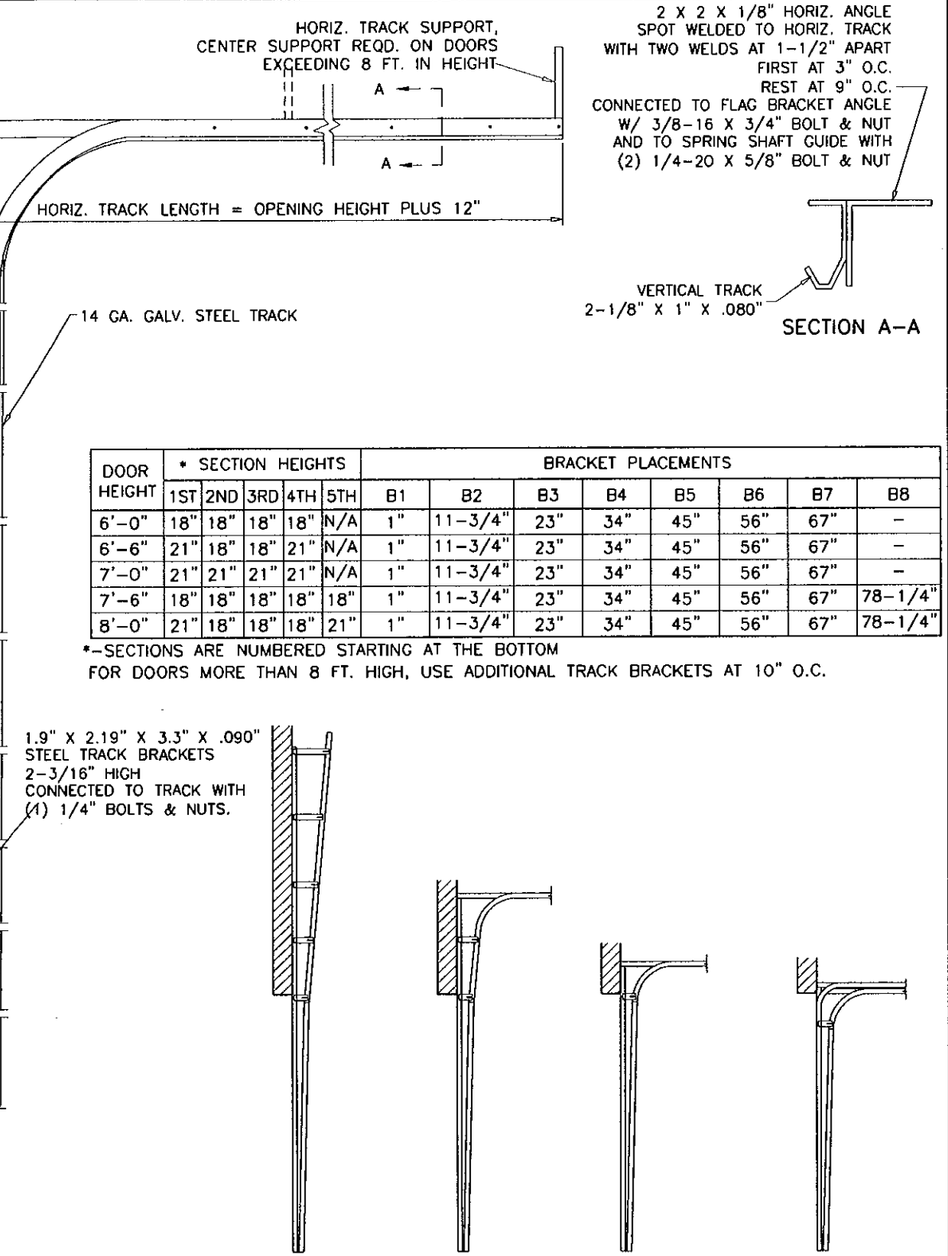

SECTION A-A

AVAILABLE TRACK OPTIONS

DOOR HEIGHT	* SECTION HEIGHTS					BRACKET PLACEMENTS							
	1ST	2ND	3RD	4TH	5TH	B1	B2	B3	B4	B5	B6	B7	B8
6'-0"	18"	18"	18"	18"	N/A	1"	11-3/4"	23"	34"	45"	56"	67"	-
6'-6"	21"	18"	18"	21"	N/A	1"	11-3/4"	23"	34"	45"	56"	67"	-
7'-0"	21"	21"	21"	21"	N/A	1"	11-3/4"	23"	34"	45"	56"	67"	-
7'-6"	18"	18"	18"	18"	18"	1"	11-3/4"	23"	34"	45"	56"	67"	78-1/4"
8'-0"	21"	18"	18"	18"	21"	1"	11-3/4"	23"	34"	45"	56"	67"	78-1/4"

*-SECTIONS ARE NUMBERED STARTING AT THE BOTTOM
FOR DOORS MORE THAN 8 FT. HIGH, USE ADDITIONAL TRACK BRACKETS AT 10" O.C.

Engr: JAVAD AHMAD.
CIVIL
FLA. PE # 70592
C.A.N. 3538
SEP 14 2010

PRODUCT RENEWED
as complying with the Florida
Building Code
Acceptance No 11-9119.19
Expiration Date 10/04/2016
By
Miami-Dade Product Control

AL-FAROOQ CORPORATION
ENGINEERS & PRODUCT DEVELOPMENT
1235 S.W. 87 AVE
MIAMI, FLORIDA 33174
TEL. (305) 264-8100 FAX. (305) 262-6978

GARAGE\01-05DAB

SECTIONAL GARAGE DOOR

DAB DOORS INC.
12195 N.W. 98 TH. AVE.
HIALEAH GARDENS, FL. 33018
TEL. (305) 556 - 6624

revisions:

no	date	by	description
B	08.11.05		ANCHOR SPACING REV.
C	02.28.06		REV. PER BCCO COMMENTS
D	12.24.08		UPDATED FOR 2007 FBC

date: 01-19-01
scale: -
dr. by: HAMID
chk. by:

drawing no.
01-05

sheet 3 of 5

WOOD FRAME BUILDINGS

STUD WALLS OR DOOR OPENING (NOT BY DAB DOORS) SHALL BE FRAMED SOLID BY NOT LESS THAN (3) 2X6 PRESSURE TREATED GRADE 2 SYP OR BETTER WOOD STUDS.
STUD WALLS TO BE CONT. FROM FOOTING TO TIE BEAM. ENGINEER OF RECORD TO VERIFY ADEQUACY OF THE SUPPORTING STRUCTURE.

WOOD BUCK CONNECTION TO MASONRY

TRACK SHALL BE SECURED WITH CONT. STEEL ANGLE TO PRESSURE TREATED 2X6 SYP WOOD JAMBS WHICH SHALL BE ANCHORED TO GROUTED REINFORCED MASONRY BLOCK WALL OR CONC. COLUMN WITH

1/4" ULTRACON BY 'ELCO' WITH SPACING OF
16" O.C. INTO BLOCK WALL, WITH 2-1/4" MIN. EMBED
13" O.C. INTO 3000 PSI CONCRETE, WITH 1-3/4" MIN. EMBED
2-1/2" MIN. EDGE DISTANCE

1/4" TAPPER BY 'POWERS' WITH SPACING OF
11" O.C. INTO BLOCK WALL, WITH 1-1/2" MIN. EMBED
13" O.C. INTO 3000 PSI CONCRETE, WITH 1-3/4" MIN. EMBED
3" MIN. EDGE DISTANCE

3/8" CONFLEX BY 'ELCO' OR
3/8" LDT BY 'ITW' WITH SPACING OF
23" O.C. INTO 3000 PSI CONCRETE, WITH 2-1/2" MIN. EMBED
3" MIN. EDGE DISTANCE

3/8" HLC SLEEVE BY 'HILTI' WITH SPACING OF
13" O.C. INTO BLOCK WALL, WITH 1-1/4" MIN. EMBED, 4" MIN. EDGE DIST.
15" O.C. INTO 3000 PSI CONCRETE, WITH 1-1/4" MIN. EMBED AND
2-1/2" MIN. EDGE DISTANCE

THE BLOCK WALL CELLS SHALL BE GROUT FILLED AND REINFORCED WITH FOUR # 5 BARS EXTENDING INTO FOOTING AND INTO TIE BEAMS ALL BARS SHALL BE CONTINUOUS FROM TIE BEAMS TO FOOTING.

PREPARATION OF JAMBS BY OTHERS

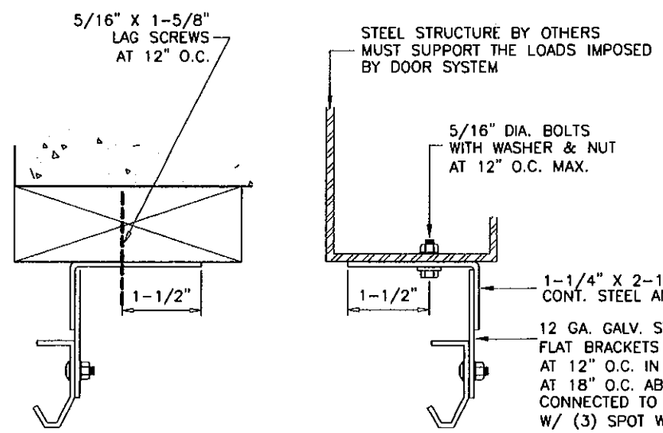

ANCHOR SPACING				
ANCHORS	STRUCTURE	EMBED	SPACING	EDGE DIST.
3/8" HLC SLEEVE BY 'HILTI'	CONC.	1-1/4"	8"	2"
3/8" HLC SLEEVE BY 'HILTI'	FILLED BLOCK	1-1/4"	8"	4"
3/8" DYNABOLT BY 'ITW'	CONC.	1-1/2"	8"	2-1/2"
3/8" DYNABOLT BY 'ITW'	FILLED BLOCK	1-1/2"	8"	3-3/4"
3/8" POWER-BOLT BY 'POWERS'	CONC.	2"	8"	1-7/8"
3/8" SLEEVE-ALL BY 'SIMPSONS'	CONC.	1-1/2"	8"	1-7/8"

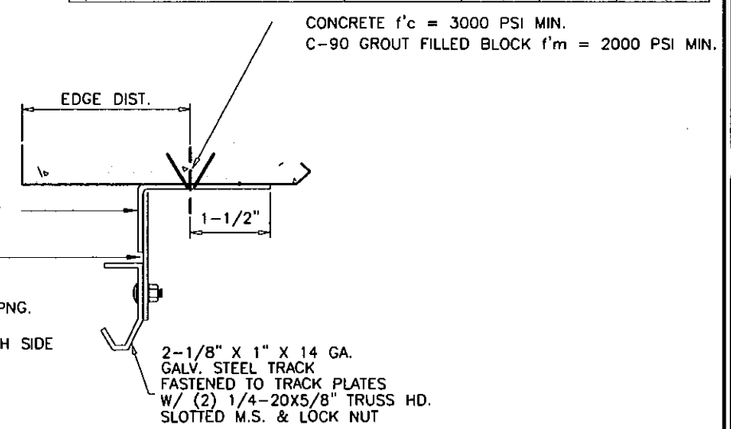

ALTERNATE TRACK INSTALLATION

Engr: JAVAD AHMAD
CIVIL
FLA. PE # 70592
C.A.N. 3538

SEP 14 2010

PRODUCT RENEWED
as complying with the Florida
Building Code
Acceptance No 11-0118.19
Expiration Date 10/09/2016
By
Miami Dade Product Control

AL-FAROOQ CORPORATION
ENGINEERS & PRODUCT DEVELOPMENT
1235 S.W. 87 AVE
MIAMI, FLORIDA 33174
TEL. (305) 264-8100 FAX. (305) 262-6978

GARAGE\01-05DAB

SECTIONAL GARAGE DOOR

DAB DOORS INC.
12195 N.W. 98 TH. AVE.
HIALEAH GARDENS, FL. 33018
TEL. (305) 556 - 6624

revisions:

no.	date	by	description
B	08.11.05		ANCHOR SPACING REV.
C	02.28.06		REV. PER BCCO COMMENTS
D	12.24.08		UPDATED FOR 2007 FBC

date: 01-19-01
scale: -
dr. by: HAMID
chk. by:

drawing no.
01-05

sheet 4 of 5

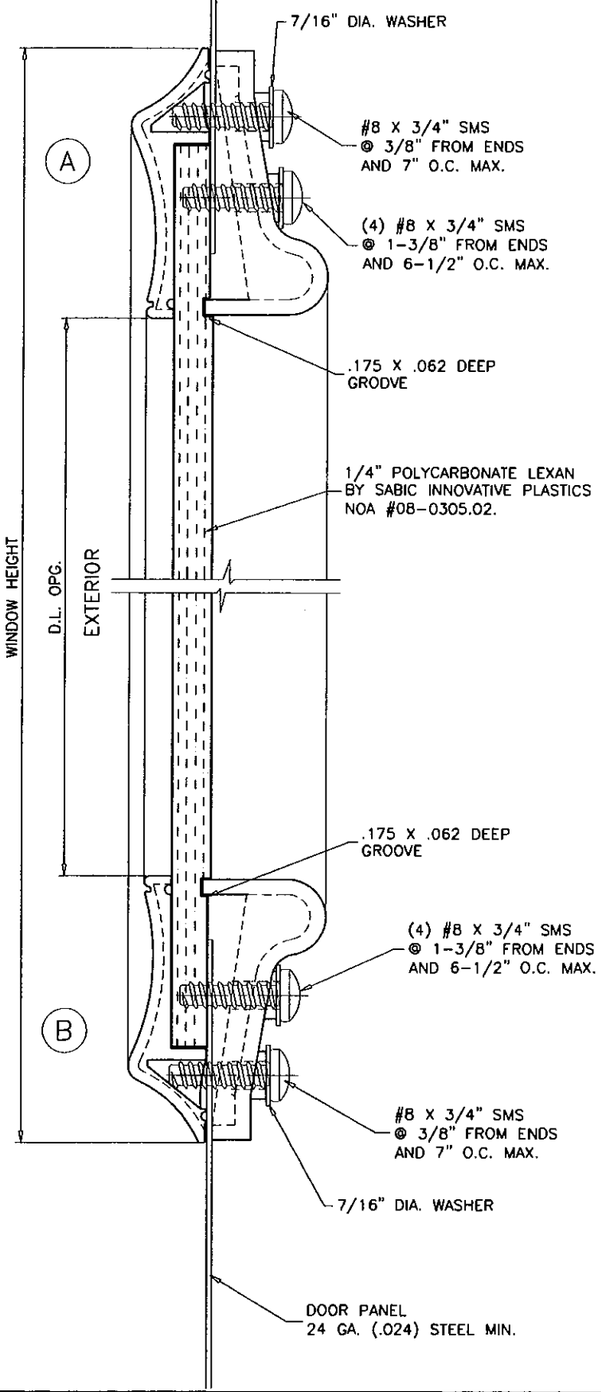

* PLASTIC COMPLIES WITH
SECTION 2612 OF FBC 2007
SEE EVIDENCE PAGE

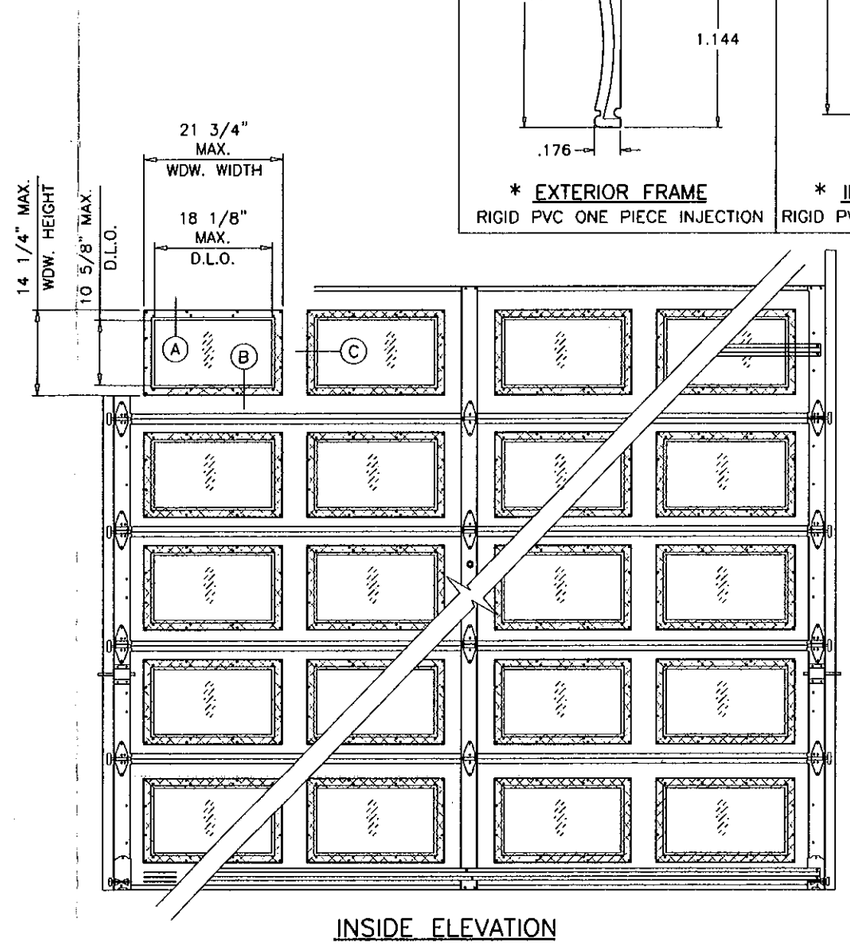

INSIDE ELEVATION
RAISED PANEL EMBOSSED DOOR WITH OPTIONAL WINDOWS

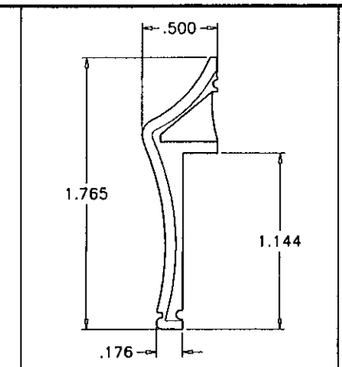

* EXTERIOR FRAME
RIGID PVC ONE PIECE INJECTION

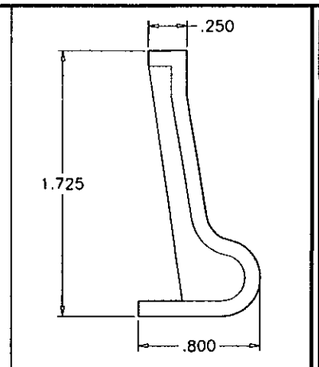

* INTERIOR FRAME
RIGID PVC ONE PIECE INJECTION

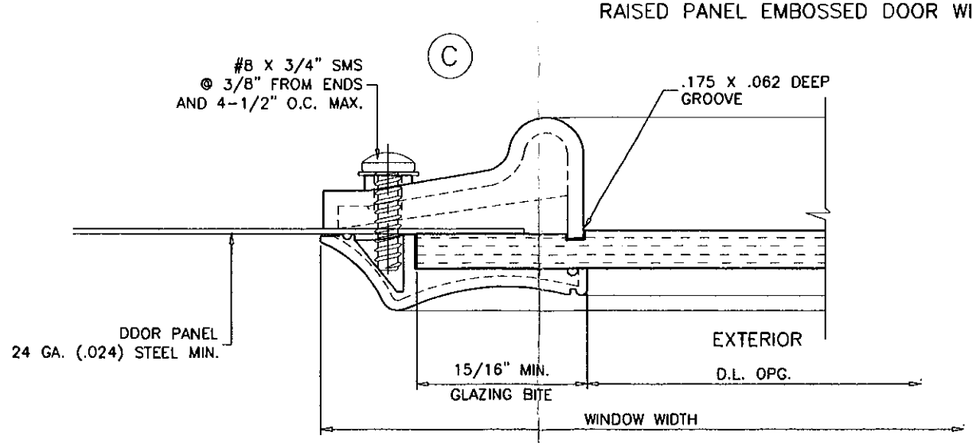

Engr: JAVAD AHMAD
CIVIL
FLA. PE # 70592
C.A.N. 3538

SEP 14 2010

PRODUCT RENEWED
as complying with the Florida
Building Code
Acceptance No 11-0118.19
Expiration Date 10/04/2016
By
Miami-Dade Product Control

AL-FAROOQ CORPORATION
ENGINEERS & PRODUCT DEVELOPMENT
1235 S.W. 87 AVE
MIAMI, FLORIDA 33174
TEL (305) 264-8100 FAX. (305) 262-6978

GARAGE\01-05DAB

SECTIONAL GARAGE DOOR

DAB DOORS INC.
12195 N.W. 98 TH. AVE.
HIALEAH GARDENS, FL. 33018
TEL. (305) 556 - 6624

revisions:

no.	date	by	description
D	12.24.08		UPDATED FOR 2007 FBC

date: 01-19-01
scale: -
dr. by: HAMID
chk. by:

drowing no.
01-05

sheet 5 of 5