MIAMI-DADE COUNTY
BUILDING AND NEIGHBORHOOD COMPLIANCE DEPARTMENT (BNC)
BOARD AND CODE ADMINISTRATION DIVISION

MIAMI-DADE COUNTY
PRODUCT CONTROL SECTION
11805 SW 26 Street, Room 208
Miami, Florida 33175-2474
T (786) 315-2590 F (786) 315-2599
www.miamidade.gov/building

NOTICE OF ACCEPTANCE (NOA)

Ruskin Company
3900 Dr. Greaves Road
Grandview, MO 64030

SCOPE: This NOA is being issued under the applicable rules and regulations governing the use of construction materials. The documentation submitted has been reviewed by Miami-Dade County Product Control Section and accepted by the Board of Rules and Appeals (BORA) to be used in Miami Dade County and other areas where allowed by the Authority Having Jurisdiction (AHJ).

This NOA shall not be valid after the expiration date stated below. The Miami-Dade County Product Control Section (In Miami-Dade County) and/or the AHJ (in areas other than Miami-Dade County) reserve the right to have this product or material tested for quality assurance purposes. If this product or material fails to perform in the accepted manner, the manufacturer will incur the expense of such testing and the AHJ may immediately revoke, modify, or suspend the use of such product or material within their jurisdiction. BORA reserves the right to revoke this acceptance, if it is determined by Miami-Dade County Product Control Section that this product or material fails to meet the requirements of the applicable building code. This product is approved as described herein, and has been designed to comply with the Florida Building Code, including the High Velocity Hurricane Zone.

DESCRIPTION: Model EME520MD Aluminum Louver

APPROVAL DOCUMENT: Drawing No. **60-021901-01D/02D, 14D** through **18D** and **03B** through **13B**, titled "EME520MD Louver" Sheets 1 through 18 of 18, dated 09/03/04, with last revision dated 08/22/10, prepared by Ruskin Company, signed and sealed by Daniel J. Rau, P.E., bearing the Miami-Dade County Product Control Renewal stamp with the Notice of Acceptance number and expiration date by the Miami-Dade County Product Control Section.

MISSILE IMPACT RATING: Large and Small Missile Impact Resistant

LABELING: Each unit shall bear a permanent label with the manufacturer's name or logo, Geneva, AL and following statement: "Miami-Dade County Product Control Approved", unless otherwise noted herein.

RENEWAL of this NOA shall be considered after a renewal application has been filed and there has been no change in the applicable building code negatively affecting the performance of this product.

TERMINATION of this NOA will occur after the expiration date or if there has been a revision or change in the materials, use, and/or manufacture of the product or process. Misuse of this NOA as an endorsement of any product, for sales, advertising or any other purposes shall automatically terminate this NOA. Failure to comply with any section of this NOA shall be cause for termination and removal of NOA.

ADVERTISEMENT: The NOA number preceded by the words Miami-Dade County, Florida, and followed by the expiration date may be displayed in advertising literature. If any portion of the NOA is displayed, then it shall be done in its entirety.

INSPECTION: A copy of this entire NOA shall be provided to the user by the manufacturer or its distributors and shall be available for inspection at the job site at the request of the Building Official.

This NOA **renews NOA # 10-0831.08** and consists of this page 1 and evidence page E-1, as well as approval document mentioned above.

The submitted documentation was reviewed by **Carlos M. Utrera, P.E.**

MIAMI-DADE COUNTY APPROVED

02/28/11

NOTICE OF ACCEPTANCE: EVIDENCE SUBMITTED

A. DRAWINGS

1. Manufacturer's die drawings and sections.
2. Drawing No. **60-021901-01D/02D, 14D** through **18D** and **03B** through **13B**, titled "EME520MD Louver" Sheets 1 through 18 of 18, dated 09/03/04, with last revision dated 08/22/10, prepared by Ruskin Company, signed and sealed by Daniel J. Rau, P.E.
   "Submitted under NOA # 10-0831.08"

B. TESTS

1. Test report on Large Missile Impact Test per TAS 201, Test, Cyclic Wind Pressure Test per TAS 203, Test and Uniform Static Air Pressure Test per TAS 202 of "Series:EME520MD; Aluminum Louvers Mulled Together", prepared by Fenestration Testing Laboratory, Inc, Test Report No.**4525**, dated 04/22/05, signed and sealed by E. J. Largaespada, P.E.
   "Submitted under NOA # 05-0812.07"

C. CALCULATIONS

1. Calculations prepared by Ruskin Company, dated 08/10/05, pages 1 though 13, signed and sealed by E. P. Hutson, P.E.
   "Submitted under NOA # 05-0812.07"

D. QUALITY ASSURANCE

1. Miami-Dade Building and Neighborhood Compliance Department (BNC)

E. MATERIAL CERTIFICATIONS

1. None.

F. STATEMENTS

1. No change letter, issued by Ruskin Company, dated 01/14/11, signed by Jim Smardo.
2. Letters of code compliance with FBC 2007 and no financial Interest issued by Ruskin Manufacturing, on 10/28/10, signed by Daniel J. Rau, P.E.
   "Submitted under NOA # 10-0831.08"

02/28/11

Carlos M. Utrera, P.E.
Product Control Examiner
NOA No. 11-0119.24
Expiration Date: February 23, 2016
Approval Date: March 24, 2011

HEAD – DWG 60-021901-18B	
6063-T6 extruded aluminum with .094" nominal wall thickness.	X
SILL – DWG 60-021901-09B	
(E) 6063-T6 extruded aluminum with .080" nominal wall thickness.	X
JAMB – DWG 60-021901-08B	
6063-T6 extruded aluminum with .080" nominal wall thickness. Caulking slots provided.	X
Flange frame. Same wall and thickness as above.	X
BLADES – DWG 60-021901-10B	
(D) 6063-T5 extruded aluminum with .080" nominal wall thickness. J style Blades are positioned at 20° angle.	X
SCREEN	
5/8" x .040" expanded flattened aluminum bird screen.	
1/2" mesh x .063" aluminum bird screen.	X
18-16 mesh alum insect screen	
No screen.	
FINISH	
Mill.	X
Kynar (opt).	
Baked enamel (modified fluorepolymer, 50% Kynar, opt).	
Color Anodize (opt).	
Clear Anodize (opt).	
Color:	
(D) ACCESSORIES	
Blankoff panel.	
1 1/2" X 1 1/2" X 1/4" (F) Continuous angles at perimeter	X

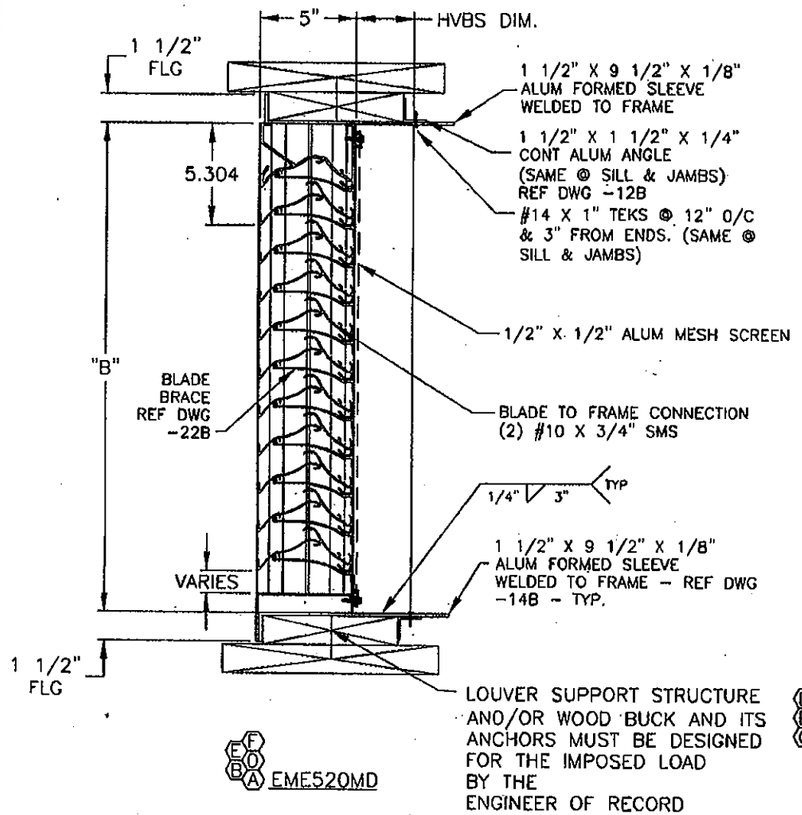

(E)(F)(D)(B)(A) EME520MD

(D)(F)(C)(B)(A) ASSEMBLY 'A'-SLEEVED DESIGN
N.T.S.

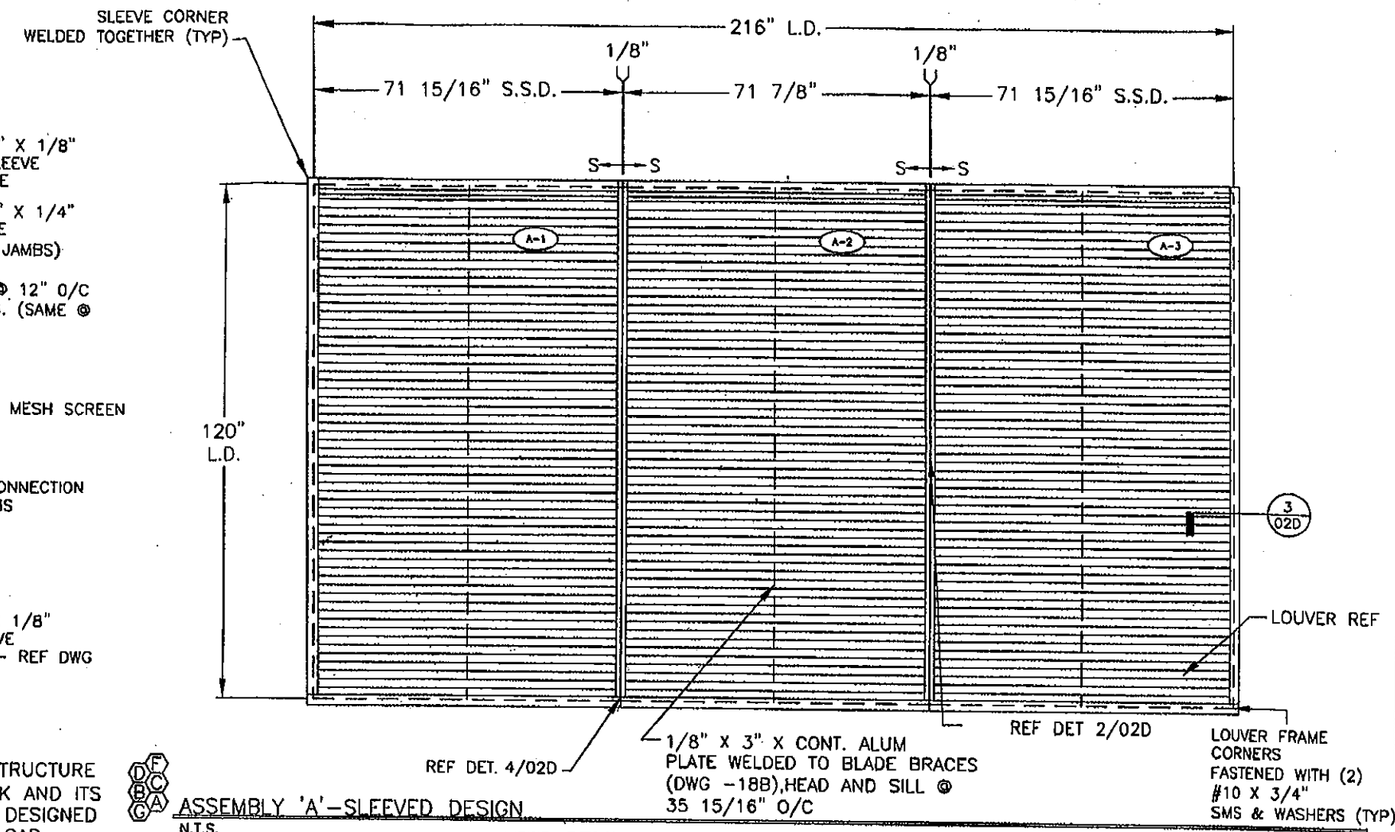

FRONT VIEW

TESTS PERFORMED:
PA-201/TAS-201 LARGE MISSLE IMPACT
PA-202/TAS-202 UNIFORM STATIC AIR PRESSURE TEST
PA-203/TAS-203 CYCLIC WIND PRESSURE TEST
DESIGN PRESSURE RATING 140 PSF

DRAWING INDEX

60-021901-01D EME520MD SLEEVE INSTALLATION SPEC ASS'Y & NOTES
60-021901-02D EME520MD SLEEVE INSTALLATION & DETAILS
60-021901-03B EME520MD JAMB FRAME WITH INTEGRAL FLANGE
60-021901-04B EME520MD 5" LOUVER SILL FRAME WITH INTEGRAL FL
60-021901-05B EME520MD BLADE DETAIL
60-021901-06B C5X6.7 CHANNEL
60-021901-07B EME520MD FORMED ALUMINUM ANGLE
60-021901-08B EME520MD ALUMINUM PERIMETER ANGLE
60-021901-09B EME520MD JAMB FRAME
60-021901-10B EME520MD ALUMINUM PERIMETER SLEEVE ANGLE
60-021901-11B EME520MD ALUMINUM VERTICAL SUPPORT CLIP ANGLE
60-021901-12B EME520MD ALUMINUM BLADE ANTI-VIBRATION PLATE
60-021901-13B EME520MD HEAD FRAME WITH INTEGRAL FLANGE
60-021901-14D EME520MD CLIP ANGLE INSTALLATION & NOTES
60-021901-15D EME520MD CLIP ANGLE INSTALLATION & DETAILS
60-021901-16D EME520MD CLIP ANGLE INSTALLATION & DETAILS
60-021901-17D EME520MD CLIP ANGLE INSTALLATION & DETAILS
60-021901-18D CLIP ANGLE DETAILS

(D) NOTES:

1) THE EME520MD HAS BEEN TESTED IN ACCORDANCE WITH MIAMI-DADE COUNTY PROTOCOLS PA-201, 202 & 203 FOR LARGE MISSLE IMPACT, UNIFORM PRESSURE AND CYCLIC WIND PRESSURE.
2) THIS LOUVER SYSTEM IS APPROVED FOR APPLICATIONS WITH DESIGN PRESSURES OF +/- 140 PSF OR LESS.
3) THE LOUVER SYSTEM IS TO BE INSTALLED IN LOCATIONS WHERE THE ROOMS BEHIND THE LOUVERS ARE DESIGNED TO DRAIN WATER PENETRATING INTO THE ROOMS, AND THE ROOMS WILL HOUSE WATER RESISTANT/WATER PROOF EQUIPMENT, COMPONENTS OR SUPPLIES.
4) THIS LOUVER SYSTEM IS NON-BEARING AND IS NOT DESIGNED TO WITHSTAND BUILDING DEAD LOADS.
5) THIS LOUVER UTILIZES AN ANCHORLESS INSTALLATION METHOD THAT DOES NOT REQUIRE THE USE OF FASTENERS INTO THE WALL SUBSTRATE. IT MAY BE INSTALLED IN ANY WALL SUBSTRATE THAT WILL WITHSTAND THE LOADS TRANSFERRED TO IT BY THE LOUVER. RUSKIN DOES NOT DETERMINE THE STRUCTURAL INTEGRITY OF THE STRUCTURE. (F)
6) MAXIMUM SINGLE SECTION SIZE: 71 15/16" WIDE X 120" HIGH. (F)
7) MAXIMUM ASSEMBLED LOUVER SIZE: UNLIMITED WIDE X UNLIMITED HEIGHT MAX. MULLION SPACING IS 71 15/16".
8) SECTIONS OR ASSEMBLIES MAY BE STACKED VERTICALLY PROVIDING A SUITABLE STRUCTURAL SUPPORT IS DESIGNED AND INSTALLED BY OTHERS TO SUPPORT ALL LOADS TRANSFERRED FROM THE LOUVER.

DANIEL J. RAU
LICENSE
NO. 63636
STATE OF FLORIDA
PROFESSIONAL ENGINEER
8/24/2010

PRODUCT RENEWED
as complying with the Florida Building Code
Acceptance No 11-0119.24
Expiration Date 02/23/2016
By
Miami Dade Product Control

FOR OFFICE USE ONLY

PRODUCT REVISED
as complying with the Florida Building Code
Acceptance No 10-0831.08
Expiration Date 02/23/2011
By
Miami Dade Product Control Division

CHANGE LETTER	REVISION DESCRIPTION	DWN. BY	CHK'D. BY	APPV'D. BY	APPV'D. BY	DATE
(G)	ENGINEER OF RECORD MISC. COORDINATION	DRP	DJR	DJR		8/20/10
(F)	REVISED PER BCCO COMMENTS DATED 9/12/05	DJR	VMA	VMA		12-1-05
(E)	REVISED WELD SIZE PER CALCULATIONS. REV'D SILL THK.	DJR	VMA	VMA		7-19-05
(D)	REVISED TO AS TESTED CONDITIONS	DJR	VMA	VMA		3-7-05
(C)	ADDED INTERMEDIATE HVBS	DLC	VMA	VMA		12-17-4
(B)	REV'D SIZES REV'D FRAMING LOCATIONS	DLC	VMA	VMA		12/11/4
(A)	CHANGED ATTACHMENT DETAILS	DJR	VMA	VMA		12/3/4

DANIEL J. RAU
ENGINEERS SIGNATURE
CIVIL ENGINEER
REGISTRANT'S NUMBER
STATE OF FLORIDA #0063636

DWN. BY: JW	CHK. BY: VMA	APPV'D. BY: VMA	APPV'D. BY:
DATE: 5-7-05	DATE: 9/3/4	DATE: 9/3/4	DATE:

RUSKIN Mfg Grandview, MO
PROPRIETARY INFORMATION

PLOT SCALE: NONE
DWG. CONVERS. BY:
DATE:

TITLE: EME520MD LOUVER, SLEEVE INSTALLATION SPEC, ASSY & NOTES.

DWG. NO. 60-021901-01D
SHEET 1 OF 18

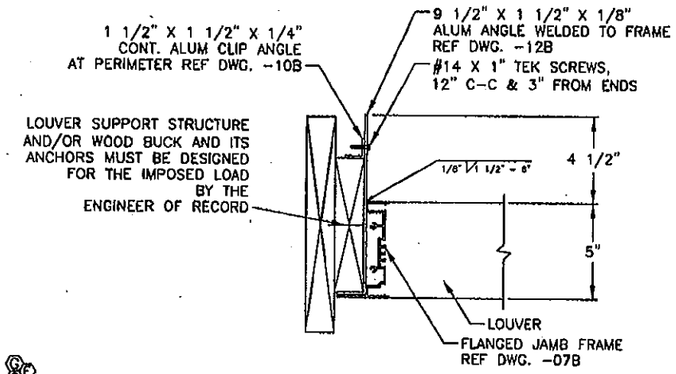

1 / 01D LOUVER @ JAMB DETAIL
N.T.S.

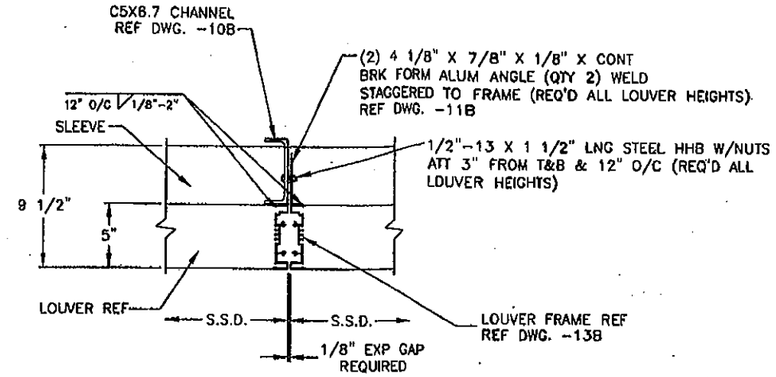

2 / 01D VISIBLE MULLION CONNECTION DETAIL
N.T.S.

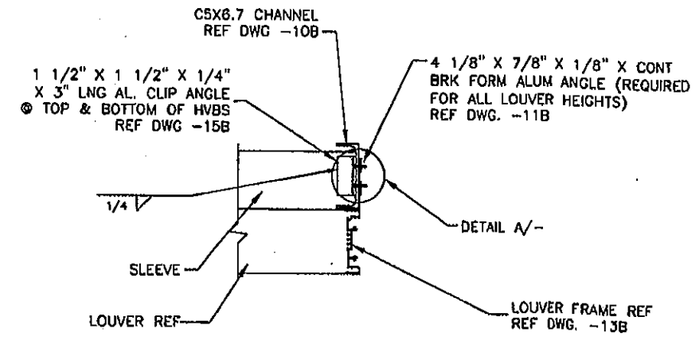

3 / 01D CLIP ANGLE INSTALLATION DETAIL
N.T.S.

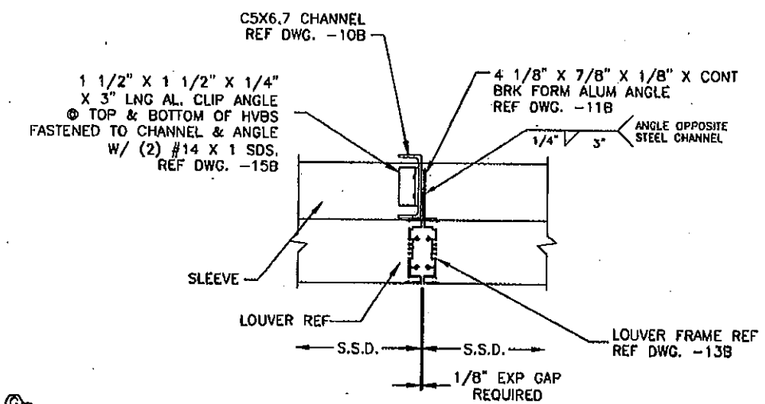

4 / 01D CLIP ANGLE CONNECTION DETAIL
N.T.S.

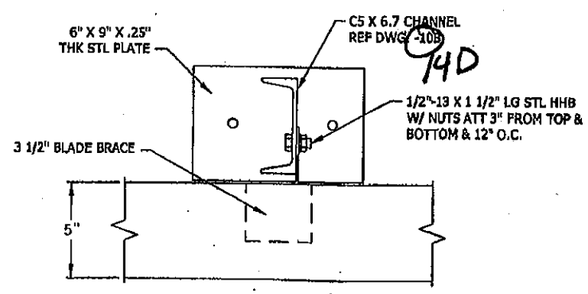

5 / 03D HIDDEN VERTICAL BLADE SUPPORT--UNSLEEVED ONLY
N.T.S.

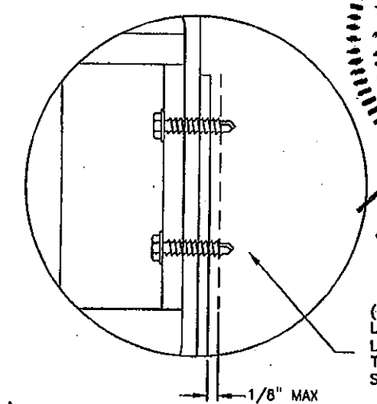

(2) 5/16" X 1" TEKS (HILTI OR EQUAL)
LOCATE MID HEIGHT OF ANGLE LEG
LOCATE 3/4" FROM ENDS OF ANGLE
TRIM PROTRUDING SCREW TIP AS
SHOWN TO 1/8" MAX PROTRUSION

DETAIL A
N.T.S.

DANIEL J. RAU
LICENSE
NO. 63636
STATE OF
FLORIDA
PROFESSIONAL ENGINEER
8/24/2010

PRODUCT RENEWED
as complying with the Florida Building Code
Acceptance No 11-0119.24
Expiration Date 02/23/2016
By
Miami Dade Product Control

FOR OFFICE USE ONLY

PRODUCT REVISED
as complying with the Florida Building Code
Acceptance No 10-0831.08
Expiration Date 02/23/2011
By
Miami Dade Product Control Division

CHANGE LETTER	REVISION DESCRIPTION	DWN. BY	CHK'D. BY	APPV'D. BY	APPV'D. BY	DATE
Ⓔ	ENGINEER OF RECORD ADDED DET 5	DRP	DJR	DJR		8/20/10
Ⓔ	REVISED PER BCCO COMMENTS DATED 8/12/05	DJR	VMA	VMA		12-1-05
Ⓓ	REV'D FOR CALCULATIONS DET. MULLION WITHOUT STEEL	DJR	VMA	VMA		7-19-05
Ⓒ	REV'D FOR AS TESTED DETAILS	DJR	VMA	VMA		3/7/05
Ⓑ	REV'D LOCATION OF FRAMING	DLC	VMA	VMA		12/14/0
Ⓐ	CHANGED ATTACHMENT DETAIL	DJR	VMA	VMA		12/3/4

DANIEL J. RAU
ENGINEERING DISCIPLINE
CIVIL ENGINEER
REGISTRATION NUMBER
STATE OF FLORIDA #0063636

DWN. BY	CHK'D. BY	APPV'D. BY	APPV'D. BY
JW	VMA	VMA	
DATE 6-7-04	DATE 9/3/4	DATE 9/3/4	DATE

RUSKIN Mfg Grandview, MO
PROPRIETARY INFORMATION

PLOT SCALE NONE
DWG. CONTROL BY: DATE:

TITLE
EME520MD LOUVER, SLEEVE INSTALLATION & DETAILS

DWG. NO.
6D-021901-02D
SHEET 2 OF 18

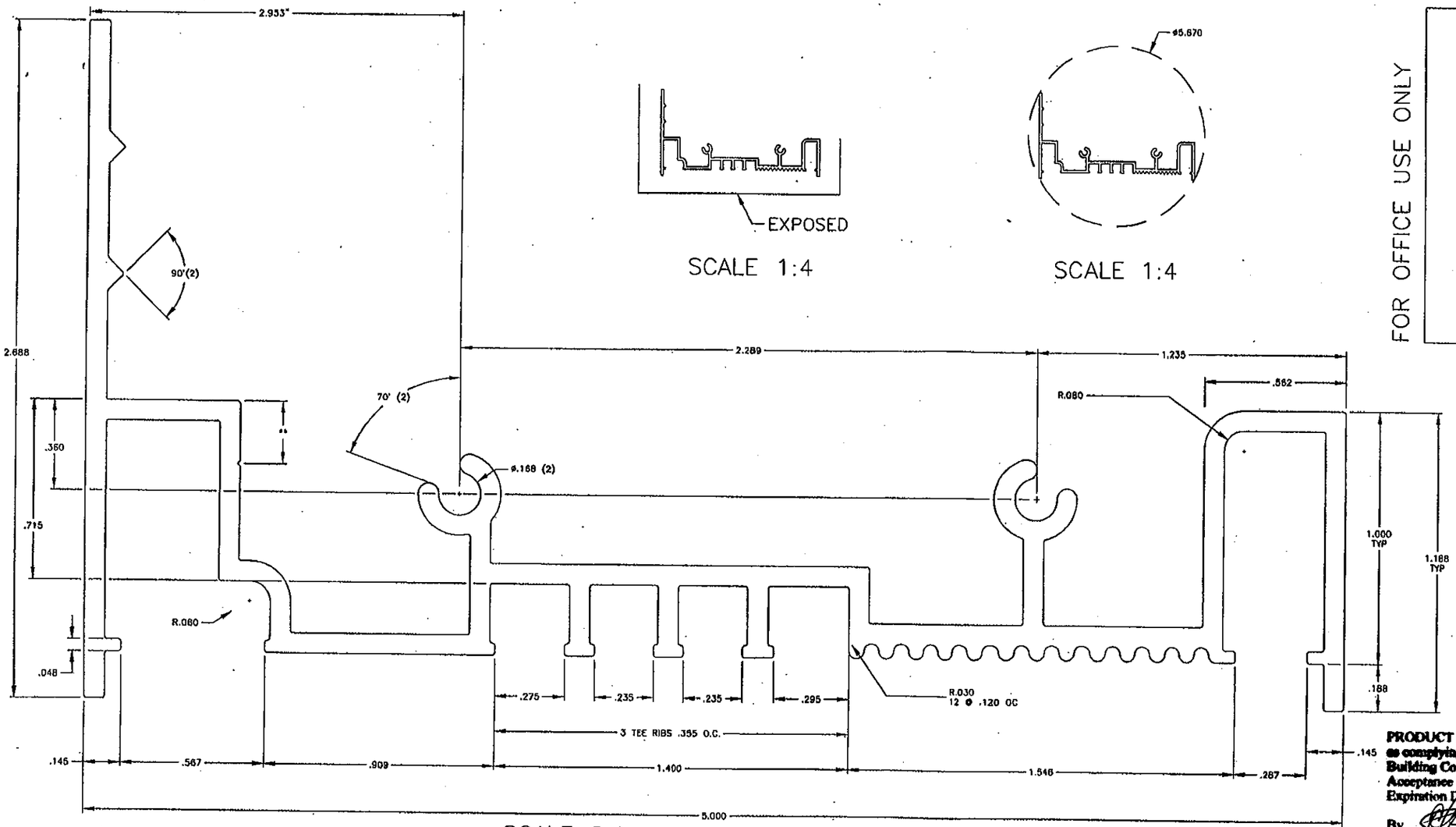

SCALE 2:1

SCALE 1:4

SCALE 1:4

FOR OFFICE USE ONLY

PRODUCT REVISED
as complying with the Florida Building Code
Acceptance No 10-0831.08
Expiration Date 12/29/2011
By
Miami Dade Product Control Division

PROFESSIONAL ENGINEER
DANIEL J. RAU
LICENSE
NO. 63636
STATE OF FLORIDA
8/24/2010

PRODUCT RENEWED
as complying with the Florida Building Code
Acceptance No 11-0119.24
Expiration Date 02/23/2016
By
Miami Dade Product Control

AREA= Ⓐ 1.147 SQ. IN.
PERIMETER= 28.426 IN.
EST. WEIGHT= 1.376 LBS/FT.

NOTES:

1. ALUMINUM ASSOCIATION TOLERANCES APPLY UNLESS OTHERWISE SPECIFIED.
2. 0.010" RADIUS AT ALL CORNERS UNLESS OTHERWISE SPECIFIED.
3. ALL DIMENSIONS ARE GIVEN IN INCHES.
4. INVENTORY NUMBER= 13030.

RUSKIN PART NUMBER 70-021789-00B Ⓖ

ENGINEER OF RECORD: DANIEL J. RAU			
ENGINEERING DISCIPLINE: CIVIL ENGINEER			
REGISTRATION NUMBER: STATE OF FLORIDA #0063636			
DWN. BY: GWW	CHK. BY: JKS	APPV'D. BY: VMA	APPV'D. BY:
DATE: 1-26-99	DATE: 1/28/99	DATE: 1/28/99	DATE:

MATERIAL: 6063T5 EXTRUDED ALUMINUM NOM WALL THICKNESS = .080

CHANGE LETTER	REVISION DESCRIPTION	DWN. BY:	CHK'D. BY:	APPV'D. BY:	APPV'D. BY:	DATE
Ⓖ	CHANGED ENGINEER OF RECORD AND DWG. NUMBER	DRP	DJR	DJR		8/22/10
Ⓑ	CHANGED PART	DJR	DJR	DJR		12-2-05
Ⓐ	UPDATED DESIGN	JW	VMA	VMA		7-14-03

RUSKIN Mfg Grandview, MO
PROPRIETARY INFORMATION

PLOT SCALE 1"=1"

DWG. CERTIFIED
BY:
DATE:

TITLE
EME520MD JAMB FRAME WITH INTEGRAL FLANGE

DWG. NO.
60-021901-03B
SHEET 3 OF 18

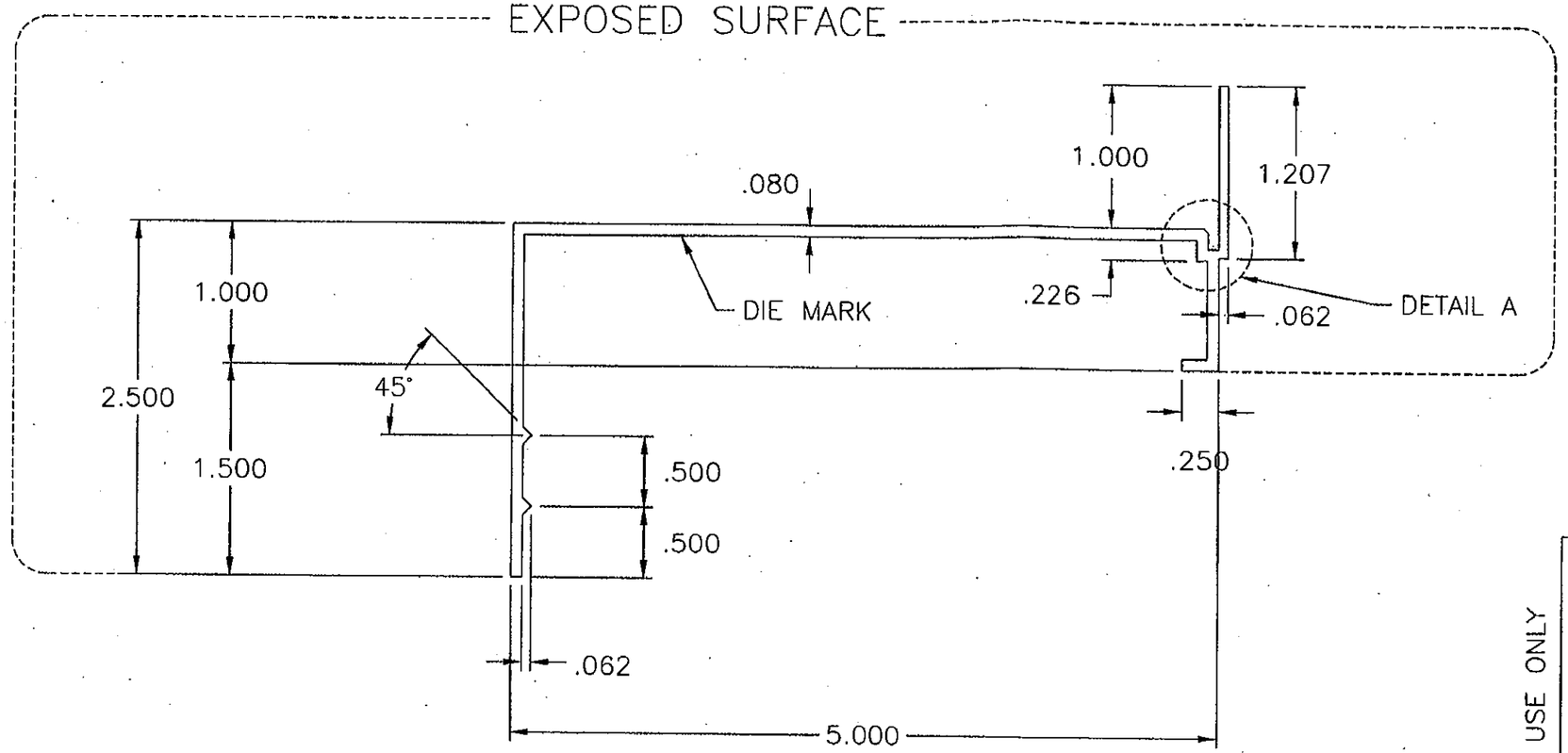

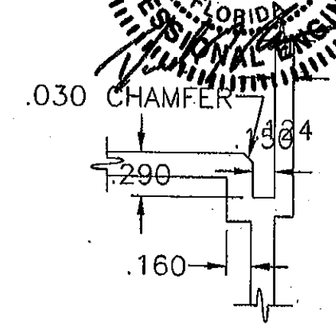

DETAIL A

SCALE: 2=1

DANIEL J. RAU
LICENSE NO. 63636
STATE OF FLORIDA
PROFESSIONAL ENGINEER
8/24/2010

FOR OFFICE USE ONLY

PRODUCT RENEWED
as complying with the Florida Building Code
Acceptance No 11-0119.24
Expiration Date 02/23/2016
By
Miami Dade Product Control

PRODUCT REVISED
as complying with the Florida Building Code
Acceptance No 10-0831.08
Expiration Date 02/23/2011
By
Miami Dade Product Control Division

RUSKIN PART NUMBER 70-020969-00B

AREA= .766 SQ. IN.
PERIMETER= 19.678 IN.
EST. WEIGHT= .901 LBS/FT.

NOTES:

1. ALUMINUM ASSOCIATION TOLERANCES APPLY UNLESS OTHERWISE SPECIFIED.
2. 0.010" RADIUS AT ALL CORNERS UNLESS OTHERWISE SPECIFIED.
3. ALL DIMENSIONS ARE GIVEN IN INCHES.
4. INVENTORY NUMBER= 13050.

G	CHANGED ENGINEER OF RECORD	VMA	DJR	DJR		8/22/10
A	CHANGED PART	DJR	DJR	DJR		12-2-05
CHANGE LETTER	REVISION DESCRIPTION	DWN. BY:	CHK'D. BY:	APPV'D. BY:	APPV'D. BY:	DATE

ENGINEER OF RECORD: DANIEL J. RAU

ENGINEERING DISCIPLINE: CIVIL ENGINEER

REGISTRATION NUMBER: STATE OF FLORIDA #0063636

DWN. BY:	CHK. BY:	APPV'D. BY:	APPV'D. BY:
GWW	JKS	VMA	
DATE: 1-26-99	DATE: 1/28/99	DATE: 1/28/99	DATE:

RUSKIN Mfg. Grandview, MO

PROPRIETARY INFORMATION

PLOT SCALE: 1"=1"

DWG. CERTIFIED BY: DATE:

MATERIAL: 6063T5 EXTRUDED ALUMINUM NOM WALL THICKNESS = .080"

TITLE: EME520MD 5" LOUVER SILL FRAME WITH INTEGRAL FLG.

DWG. NO. 60-021901-04B

SHEET 4 OF 18

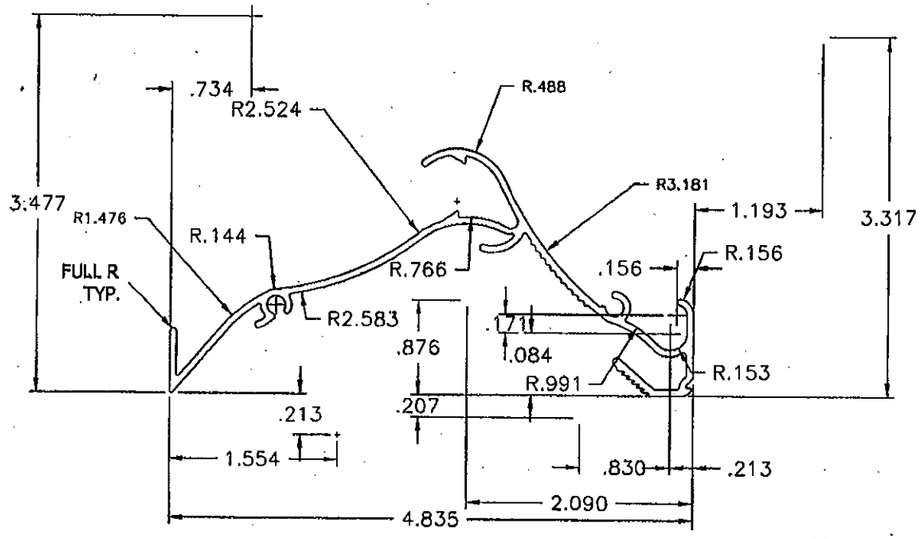

RADIUS LAYOUT

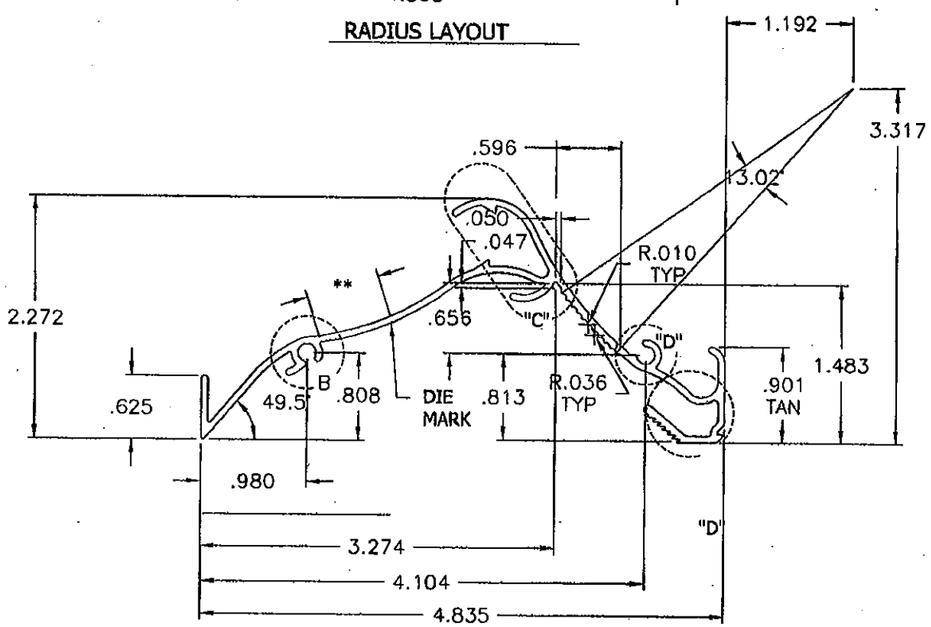

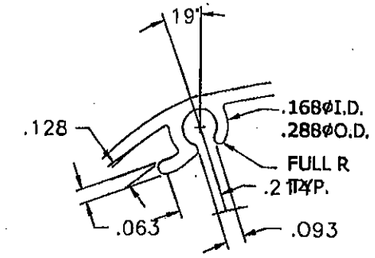

DETAIL "B"
SCALE: 2=1

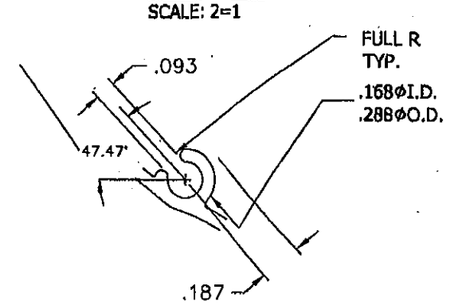

DETAIL "D"
SCALE: 2=1

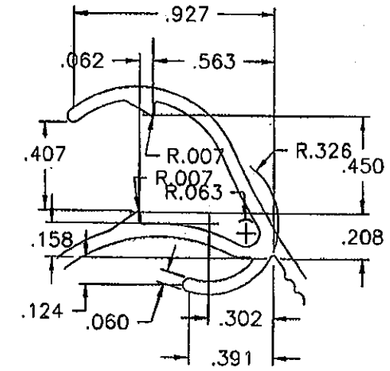

DETAIL "C"
SCALE: 2=1

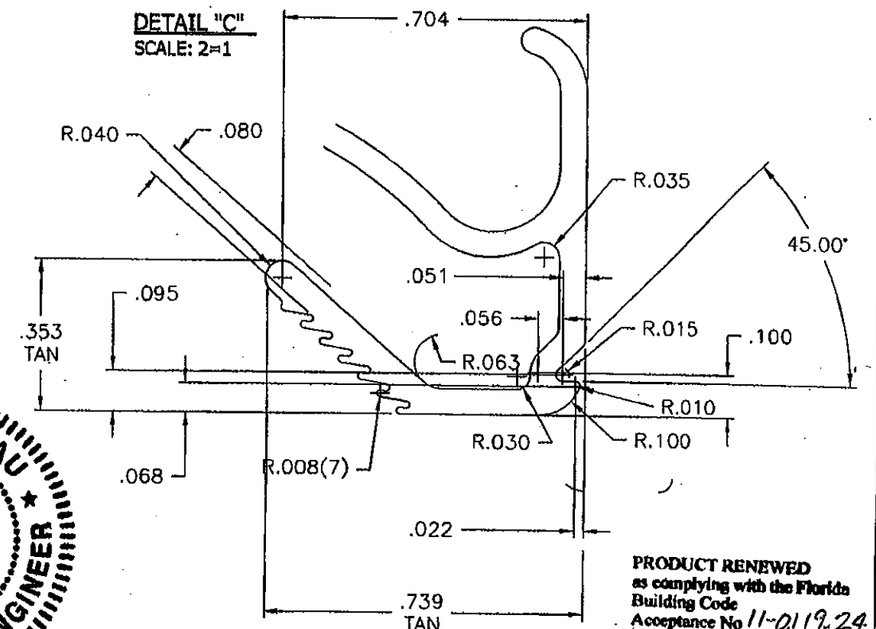

DETAIL "E"
SCALE: 4=1

FOR OFFICE USE ONLY

PRODUCT REVISED
as complying with the Florida Building Code
Acceptance No 10-0831.08
Expiration Date 02/23/2011
By
Miami-Dade Product Control Division

PRODUCT RENEWED
as complying with the Florida Building Code
Acceptance No 11-0119.24
Expiration Date 02/23/2016
By
Miami-Dade Product Control

DANIEL J. RAU
LICENSE
NO. 63636
STATE OF FLORIDA
PROFESSIONAL ENGINEER
8/24/2010

AREA= .668 SQ. IN.
PERIMETER= 20.554 IN.
EST. WEIGHT= .802 LBS/FT.

NOTES:

1. ALUMINUM ASSOCIATION TOLERANCES APPLY UNLESS OTHERWISE SPECIFIED.
2. 0.010" RADIUS AT ALL CORNERS UNLESS OTHERWISE SPECIFIED.
3. ALL DIMENSIONS ARE GIVEN IN INCHES.

ENGINEER OF RECORD			
DANIEL J. RAU			
ENGINEERING DISCIPLINE			
CIVIL ENGINEER			
REGISTRATION NUMBER			
STATE OF FLORIDA #0063636			
DWN. BY: JKS	CHK. BY: VMA	APPV'D. BY: GL	APPV'D. BY:
DATE: 4/30/98	DATE: 5/1/98	DATE: 5/4/98	DATE:

CHANGE LETTER	REVISION DESCRIPTION	DWN. BY:	CHK'D. BY:	APPV'D. BY:	APPV'D. BY:	DATE
D	CHANGED ENGINEER OF RECORD	VMA	DJR	DJR		8/22/10

RUSKIN Mfg Grandview, MO
PROPRIETARY INFORMATION

PLOT SCALE: NONE

DWG. CERTIFIED
BY:
DATE:

TITLE: EME520MD BLADE

DWG. NO. 60-021901-05B

SHEET 5 OF 18

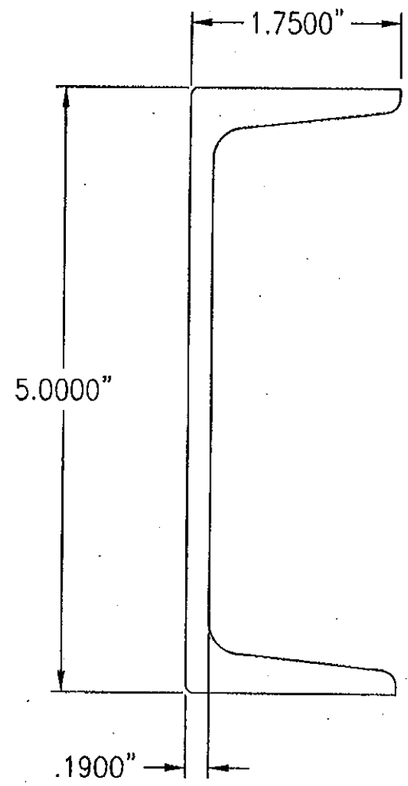

DANIEL J. RAU
LICENSE
NO. 63636
STATE OF
FLORIDA
PROFESSIONAL ENGINEER
8/24/2010

FOR OFFICE USE ONLY

PRODUCT RENEWED
as complying with the Florida Building Code
Acceptance No 11-0119.24
Expiration Date 02/23/2016
By
Miami Dade Product Control

PRODUCT REVISED
as complying with the Florida Building Code
Acceptance No 10-0831.08
Expiration Date 02/23/2011
By
Miami Dade Product Control Division

G	CHANGED ENGINEER OF RECORD AND DWG. NUMBER	VMA	DJR	DJR		8/22/10
A	CHANGED PART	DJR	DJR	DJR		12-2-05
CHANGE LETTER	REVISION DESCRIPTION	DWN. BY:	CHK'D. BY:	APPV'D. BY:	APPV'D. BY:	DATE

ENGINEER OF RECORD: DANIEL J. RAU (G)

ENGINEERING DISCIPLINE: CIVIL ENGINEER

REGISTRATION NUMBER: STATE OF FLORIDA #0063636

DWN. BY:	CHK. BY:	APPV'D. BY:	APPV'D. BY:
JPG	VMA	VMA	
DATE: 4/7/00	DATE: 7-19-05	DATE: 7-19-05	DATE:

ASTM A36 HRS GALVANIZED

RUSKIN Mfg. Grandview, MO
PROPRIETARY INFORMATION

TITLE: C5x6.7 CHANNEL

PLOT SCALE: NONE

DWG. CERTIFIED
BY:
DATE:

DWG. NO. 60-021901-06B

SHEET 6 OF 18

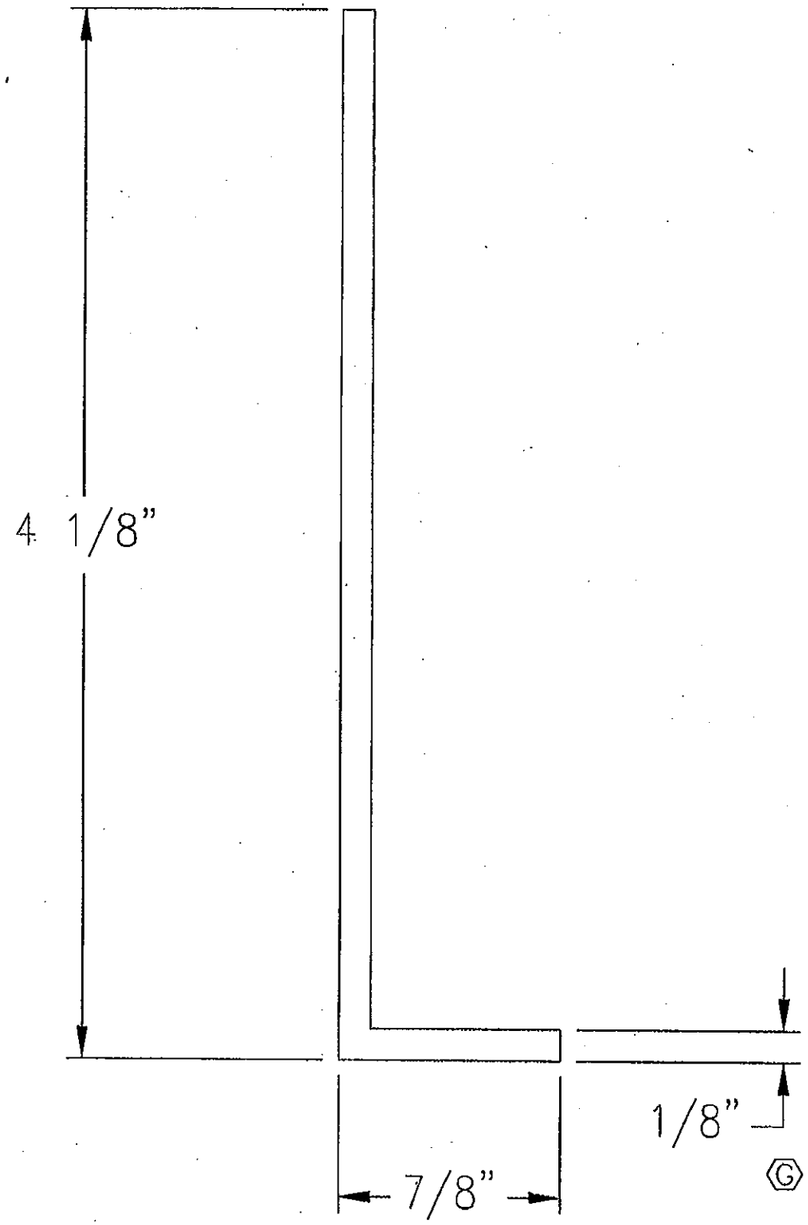

FOR OFFICE USE ONLY

PRODUCT REVISED
as complying with the Florida Building Code
Acceptance No 10-0831.08
Expiration Date 02/23/2011
By
Miami Dade Product Control Division

PRODUCT RENEWED
as complying with the Florida Building Code
Acceptance No 11-0119.24
Expiration Date 02/23/2016
By
Miami Dade Product Control

DANIEL J. RAU
LICENSE NO. 63636
STATE OF FLORIDA
PROFESSIONAL ENGINEER
8/24/2010

UNLESS OTHERWISE SPECIFIED USE STD. ENGINEERING TOLERANCES PER WIQ-008.

ENGINEER OF RECORD: DANIEL J. RAU

ENGINEERING DISCIPLINE: CIVIL ENGINEER

REGISTRATION NUMBER: STATE OF FLORIDA #0063636

DWN. BY:	CHK. BY:	APPV'D. BY:	APPV'D. BY:
DJR	VMA	VMA	
DATE: 7-19-05	DATE: 7-19-05	DATE: 7-19-05	DATE:

MATERIAL: 3003-H14 ALUMINUM

CHANGE LETTER	REVISION DESCRIPTION	DWN. BY:	CHK'D. BY:	APPV'D. BY:	APPV'D. BY:	DATE
G	CHANGED ENGINEER OF RECORD	VMA	DJR	DJR		8/22/10
A	CHANGED PART	DJR	DJR	DJR		12-2-05

RUSKIN SWARTWOUT
3900 DR. GREAVES RD
GRANDVIEW, MO 64030
PROPRIETARY INFORMATION

PLOT SCALE: NONE

DWG. CERTIFIED
BY:
DATE:

TITLE: EME520MD FORMED ALUMINUM ANGLE

DWG. NO. 60-021901-07B

SHEET 7 OF 18

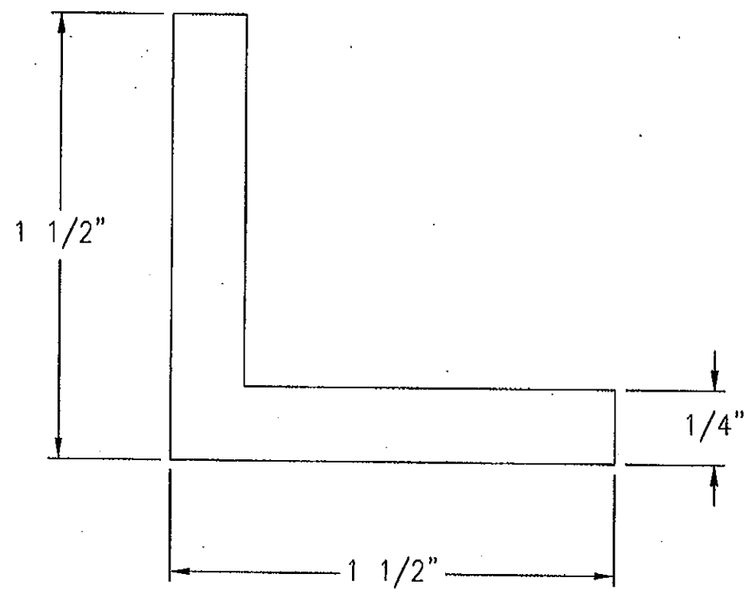

FOR OFFICE USE ONLY

PRODUCT REVISED
as complying with the Florida Building Code
Acceptance No 10-0831.08
Expiration Date 02/23/2011
By
Miami-Dade Product Control Division

PRODUCT RENEWED
as complying with the Florida Building Code
Acceptance No 11-0119.24
Expiration Date 02/23/2016
By
Miami-Dade Product Control

DANIEL J. RAU
LICENSE NO. 63636
STATE OF FLORIDA
PROFESSIONAL ENGINEER
8/24/2010

(B)	CHANGED ENGINEER OF RECORD	VMA	DJR	DJR		8/22/10
(A)	CHANGED PART	DJR	DJR	DJR		12-2-05
CHANGE LETTER	REVISION DESCRIPTION	DWN. BY:	CHK'D. BY:	APPV'D. BY:	APPV'D. BY:	DATE

(G)

ENGINEER OF RECORD
DANIEL J. RAU

ENGINEERING DISCIPLINE
CIVIL ENGINEER

REGRISTRATION NUMBER
STATE OF FLORIDA #0063636

DWN. BY: DJR	CHK. BY: VMA	APPV'D. BY: VMA	APPV'D. BY:
DATE: 7-19-05	DATE: 7-19-05	DATE: 7-19-05	DATE:

MATERIAL: 6063-T5 EXTRUDED

RUSKIN SWARTWOUT
3900 DR. GREAVES RD
GRANDVIEW, MO 64030
PROPRIETARY INFORMATION

PLOT SCALE
NONE

DWG. CERTIFIED
BY:
DATE:

TITLE
EME520MD
ALUMINUM PERIMETER
ANGLE

DWG. NO.
60-021901-08B
SHEET 8 OF 18

UNLESS OTHERWISE SPECIFIED USE STD.
ENGINEERING TOLERANCES PER WIQ-008.

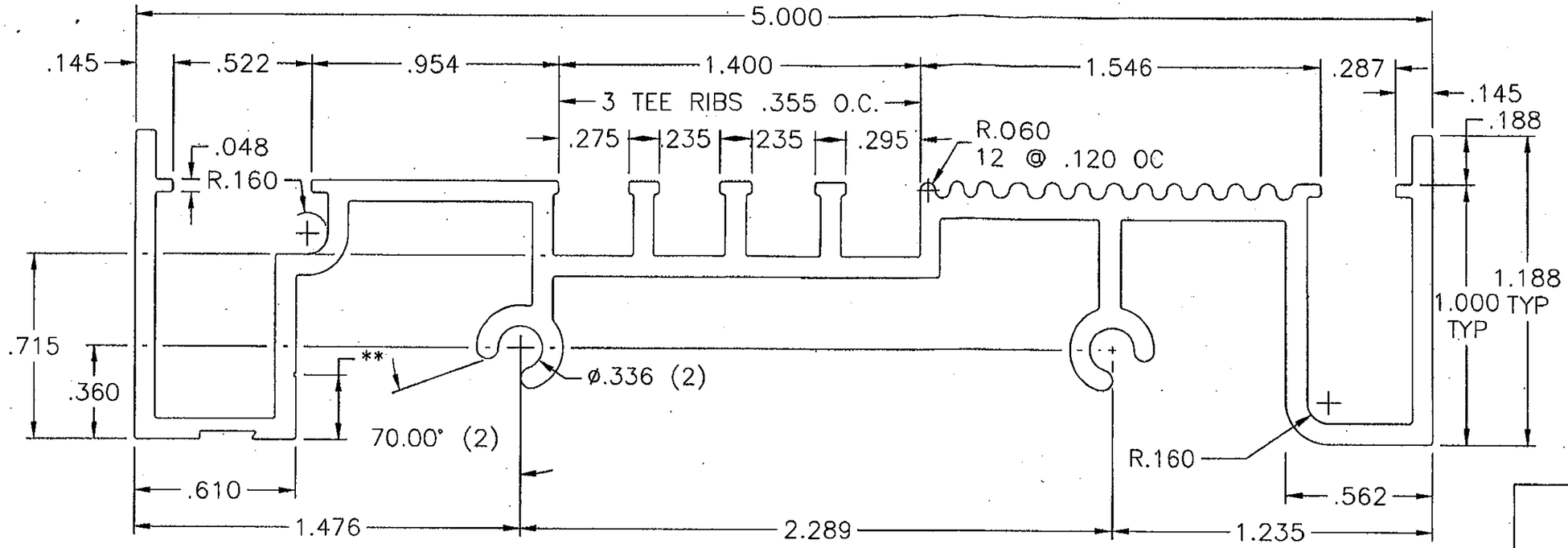

SCALE 2:1

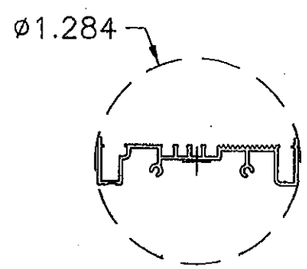

SCALE 1:4

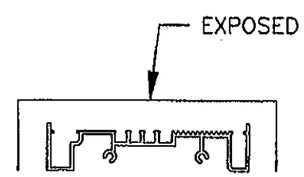

SCALE 1:4

RUSKIN PART NUMBER 70-021971-00B

DANIEL J. RAU
LICENSE NO. 63636
STATE OF FLORIDA
PROFESSIONAL ENGINEER
8/24/2010

FOR OFFICE USE ONLY

PRODUCT RENEWED
as complying with the Florida Building Code
Acceptance No 11-0119.24
Expiration Date 02/23/2016
By
Miami Dade Product Control

PRODUCT REVISED
as complying with the Florida Building Code
Acceptance No 10-0831.08
Expiration Date 02/23/2011
By
Miami Dade Product Control Division

AREA= Ⓐ 1.015 SQ. IN.
PERIMETER= 25.488 IN.
EST. WEIGHT= 1.218 LBS/FT.

NOTES:

1. ALUMINUM ASSOCIATION TOLERANCES APPLY UNLESS OTHERWISE SPECIFIED.
2. 0.010" RADIUS AT ALL CORNERS UNLESS OTHERWISE SPECIFIED.
3. ALL DIMENSIONS ARE GIVEN IN INCHES.
4. INVENTORY NUMBER= 12510.

Ⓖ

CHANGE LETTER	REVISION DESCRIPTION	DWN. BY:	CHK'D. BY:	APPV'D. BY:	APPV'D. BY:	DATE
Ⓒ	CHANGED ENGINEER OF RECORD, PART	DRP	DJR	DJR		8/22/10
Ⓐ	MOVED FRONT POCKET & MODIFIED FRT & REAR	JW	VMA	VMA		11-21-02

ENGINEER OF RECORD: DANIEL J. RAU

ENGINEERING DISCIPLINE: CIVIL ENGINEER

REGISTRATION NUMBER: STATE OF FLORIDA #0063636

DWN. BY:	CHK. BY:	APPV'D. BY:	APPV'D. BY:
JKS	VMA	GL	
DATE: 3/6/98	DATE: 5-1-98	DATE: 5-4-98	DATE:

MATERIAL: 6063T5 EXTRUDED ALUMINUM NOM WALL THICKNESS = .080

RUSKIN Mfg Grandview, MO

PROPRIETARY INFORMATION

TITLE: EME520MD JAMB FRAME

PLOT SCALE: 1"=1"

DWG. CERTIFIED BY: DATE:

DWG. NO. 60-021901-09B

SHEET 9 OF 18

DANIEL J. RAU
LICENSE
NO. 63636
STATE OF
FLORIDA
PROFESSIONAL ENGINEER
8/24/2010

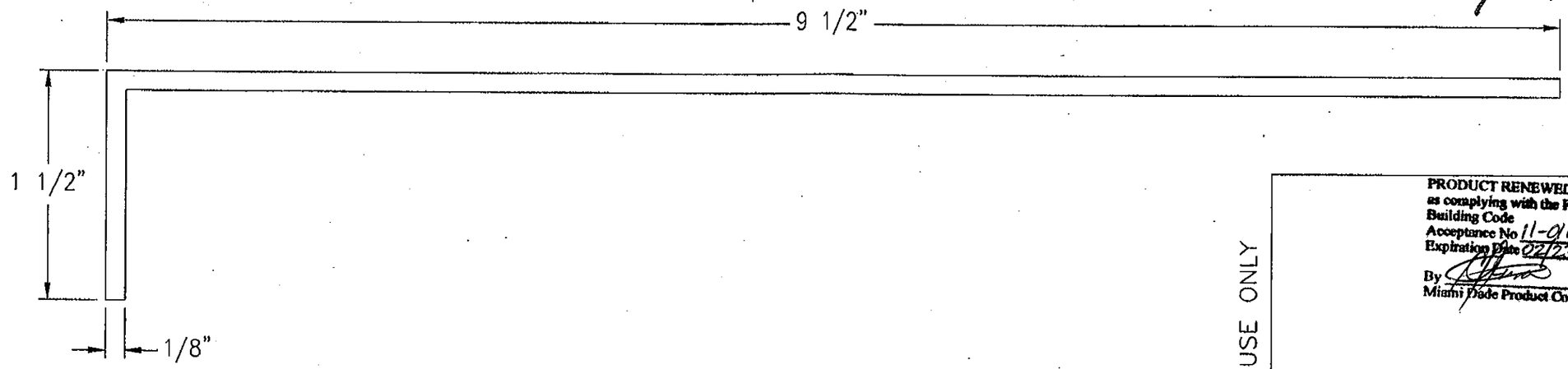

FOR OFFICE USE ONLY

PRODUCT RENEWED
as complying with the Florida Building Code
Acceptance No 11-0919.24
Expiration Date 02/23/2016
By
Miami Dade Product Control

PRODUCT REVISED
as complying with the Florida Building Code
Acceptance No 10-0831.08
Expiration Date 02/23/2011
By
Miami Dade Product Control Division

G	CHANGED ENGINEER OF RECORD	VMA	DJR	DJR		8/22/10
A	CHANGED PART.	DJR	DJR	DJR		12-2-05
CHANGE LETTER	REVISION DESCRIPTION	DWN. BY:	CHK'D. BY:	APPV'D. BY:	APPV'D. BY:	DATE

G

ENGINEER OF RECORD
DANIEL J. RAU

ENGINEERING DISCIPLINE
CIVIL ENGINEER

REGISTRATION NUMBER
STATE OF FLORIDA #0063636

DWN. BY: DJR	CHK. BY: VMA	APPV'D. BY: VMA	APPV'D. BY: VMA.
DATE: 7-19-05	DATE: 7-19-05	DATE: 7-19-05	DATE:

MATERIAL:3003-H14 ALUMINUM

RUSKIN
SWARTWOUT
3900 DR. GREAVES RD
GRANDVIEW, MO 64030
PROPRIETARY INFORMATION

PLOT SCALE
NONE

DWG. CERTIFIED
BY:
DATE:

TITLE
EME520MD
ALUMINUM PERIMETER
SLEEVE ANGLE

DWG. NO.
60-021901-10B
SHEET 10 OF 18

UNLESS OTHERWISE SPECIFIED USE STD.
ENGINEERING TOLERANCES PER WIQ-008.

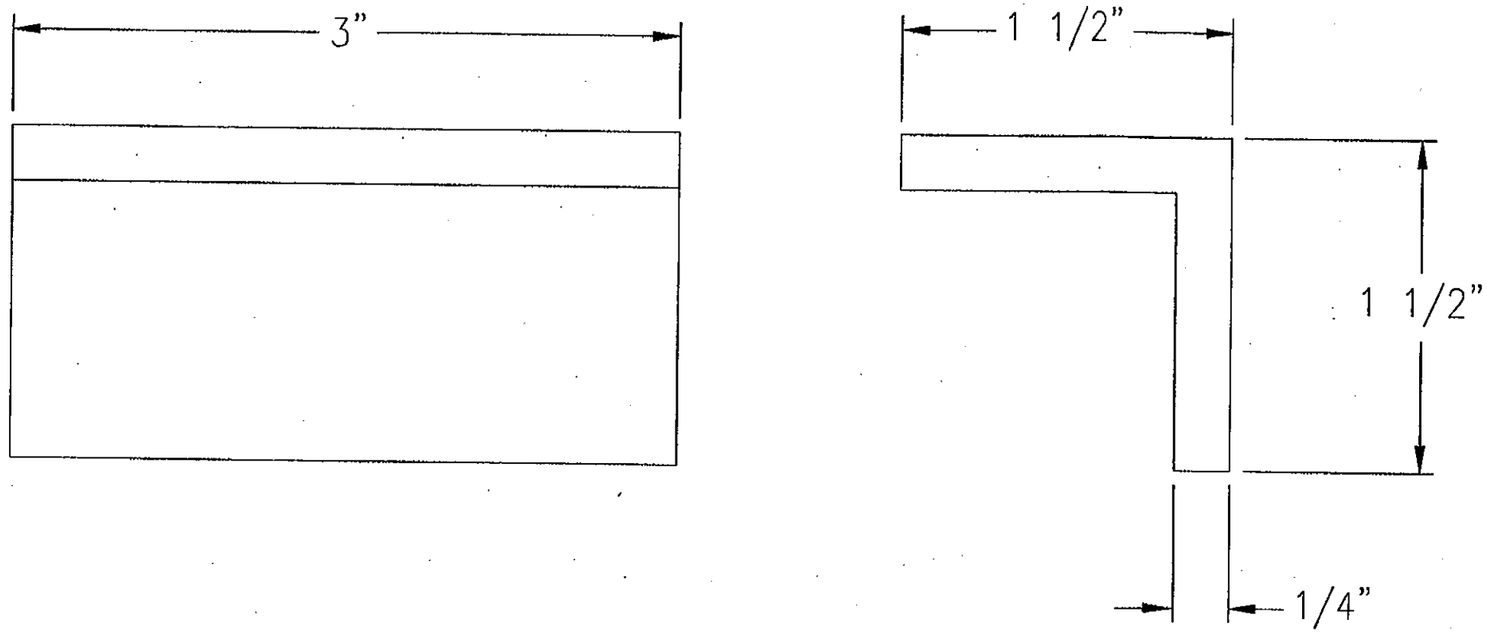

FOR OFFICE USE ONLY

PRODUCT RENEWED
as complying with the Florida Building Code
Acceptance No 11-0119.24
Expiration Date 02/23/2016
By
Miami Dade Product Control

PRODUCT REVISED
as complying with the Florida Building Code
Acceptance No 10-0831.08
Expiration Date 02/23/2011
By
Miami Dade Product Control Division

DANIEL J. RAU
LICENSE NO. 63636
STATE OF FLORIDA
PROFESSIONAL ENGINEER
8/24/2010

G	CHANGED ENGINEER OF RECORD	VMA	DJR	DJR		8/22/10
A	CHANGED PART	DJR	DJR	DJR		12-2-05
CHANGE LETTER	REVISION DESCRIPTION	DWN. BY:	CHK'D. BY:	APPV'D. BY:	APPV'D. BY:	DATE

ENGINEER OF RECORD: DANIEL J. RAU

ENGINEERING DISCIPLINE: CIVIL ENGINEER

REGISTRATION NUMBER: STATE OF FLORIDA #0063636

DWN. BY:	CHK. BY:	APPV'D. BY:	APPV'D. BY:
DJR	VMA	VMA	
DATE: 7-19-05	DATE: 7-19-05	DATE: 7-19-05	DATE:

MATERIAL: 6063-T5 EXTRUDED

RUSKIN SWARTWOUT
3900 DR. GREAVES RD
GRANDVIEW, MO 64030
PROPRIETARY INFORMATION

TITLE
EME520MD
ALUMINUM VERTICAL
SUPPORT CLIP ANGLE

PLOT SCALE: NONE

DWG. CERTIFIED
BY:
DATE:

DWG. NO.
60-021901-11B
SHEET 11 OF 18

UNLESS OTHERWISE SPECIFIED USE STD.
ENGINEERING TOLERANCES PER WIQ-008.

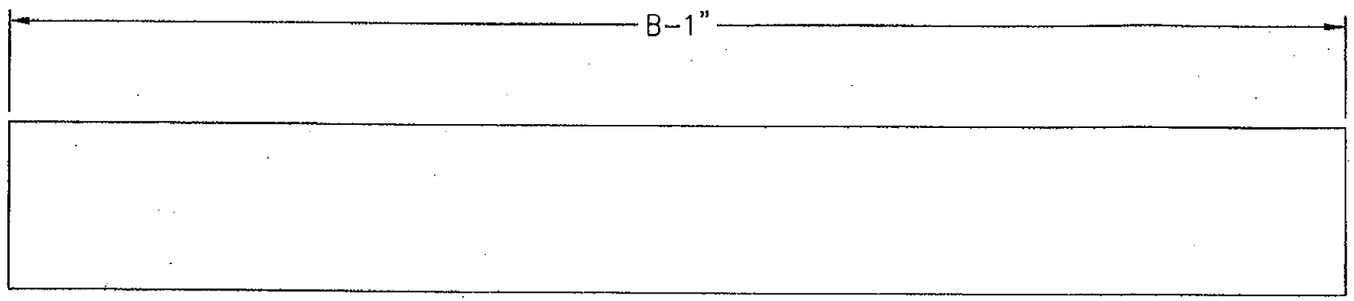

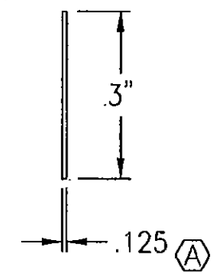

DANIEL J. RAU
LICENSE
NO. 63636
STATE OF
FLORIDA
PROFESSIONAL ENGINEER
8/24/2010

FOR OFFICE USE ONLY

PRODUCT RENEWED
as complying with the Florida
Building Code
Acceptance No 11-0119.24
Expiration Date 02/23/2016
By
Miami-Dade Product Control

PRODUCT REVISED
as complying with the Florida
Building Code
Acceptance No 10-0831.08
Expiration Date 02/23/2011
By
Miami-Dade Product Control
Division

(G)

ENGINEER OF RECORD	DANIEL J. RAU
ENGINEERING DISCIPLINE	CIVIL ENGINEER
REGISTRATION NUMBER	STATE OF FLORIDA #0063636

DWN. BY:	CHK. BY:	APPV'D. BY:	APPV'D. BY:
DJR	VMA	VMA	
DATE: 7-19-05	DATE: 7-19-05	DATE: 7-19-05	DATE:

MATERIAL: 6063-T5 EXTRUDED

CHANGE LETTER	REVISION DESCRIPTION	DWN. BY:	CHK'D. BY:	APPV'D. BY:	APPV'D. BY:	DATE
(G)	CHANGED ENGINEER OF RECORD	VMA	DJR	DJR		8/22/10
(A)	CHANGED PART CHANGED THICKNESS	DJR	DJR	DJR		12-2-05

RUSKIN
SWARTWOUT
3900 DR. GREAVES RD
GRANDVIEW, MO 64030
PROPRIETARY INFORMATION

PLOT SCALE
NONE

DWG. CERTIFIED
BY:
DATE:

TITLE
EME520MD
ALUM BLADE
ANTI-VIBRATION PLATE

DWG. NO.
60-021901-12B
SHEET 12 OF 18

UNLESS OTHERWISE SPECIFIED USE STD.
ENGINEERING TOLERANCES PER WIQ-008.

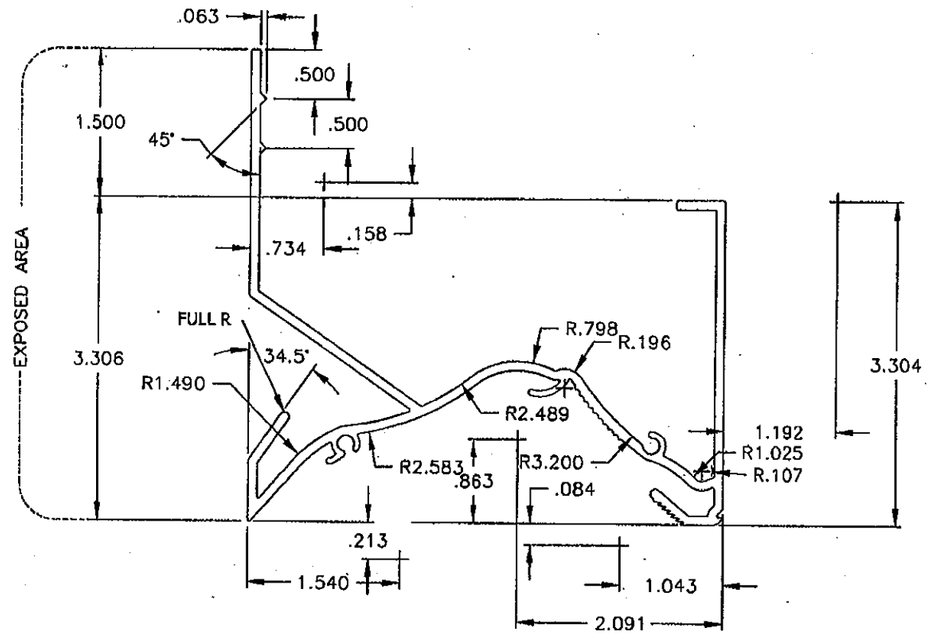

RADIUS LAYOUT

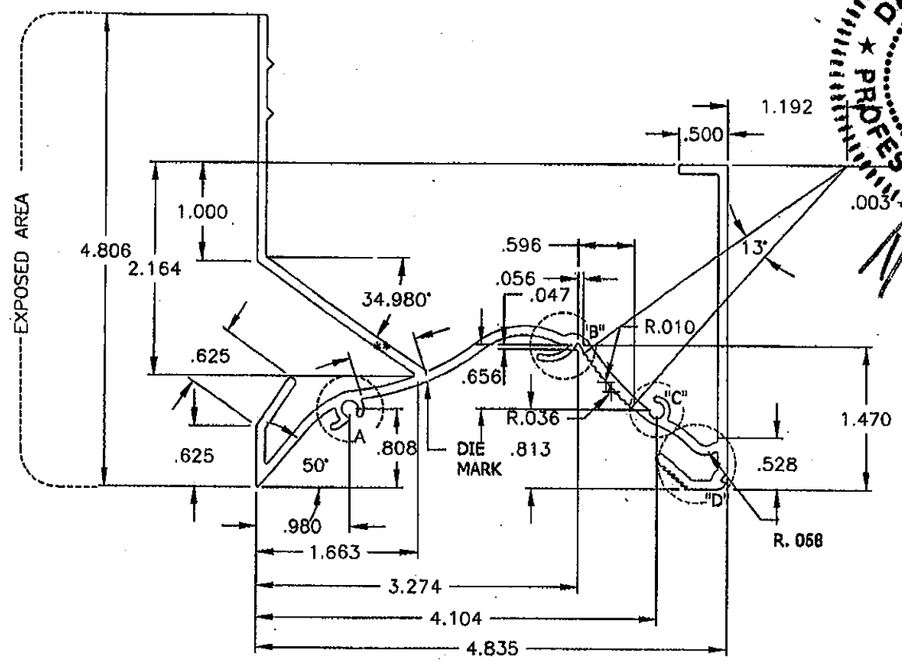

PRODUCT RENEWED
as complying with the Florida Building Code
Acceptance No 11-0119.24
Expiration Date 02/23/2016
By
Miami Dade Product Control

PRODUCT REVISED
as complying with the Florida Building Code
Acceptance No 10-0831.08
Expiration Date 02/23/2011
By
Miami Dade Product Control Division

FOR OFFICE USE ONLY

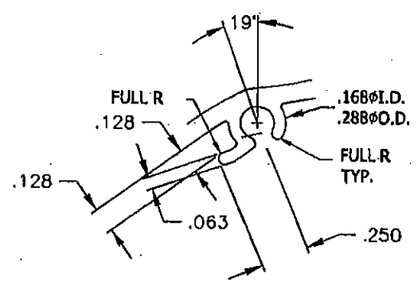

DETAIL "A"
SCALE: 2=1

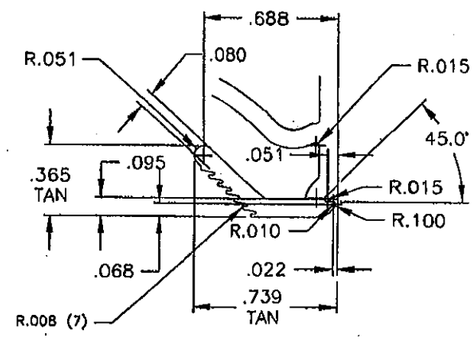

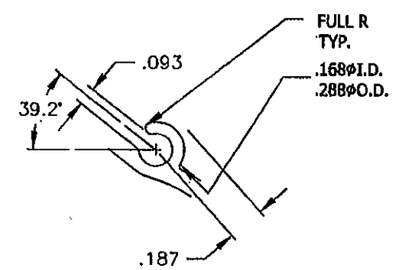

DETAIL "C"
SCALE: 2=1

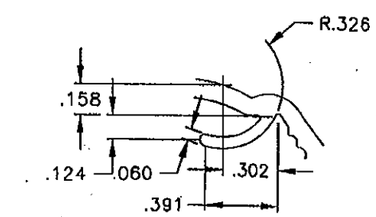

DETAIL "B"
SCALE: 2=1

AREA= 1.562 SQ. IN.
PERIMETER= 35.144 IN.
EST. WEIGHT= 1.8744 LBS/FT.

NOTES:

1. ALUMINUM ASSOCIATION TOLERANCES APPLY UNLESS OTHERWISE SPECIFIED.
2. 0.010" RADIUS AT ALL CORNERS UNLESS OTHERWISE SPECIFIED.
3. ALL DIMENSIONS ARE GIVEN IN INCHES.
4. INVENTORY NUMBER= 13010.

G	CHANGED ENGINEER OF RECORD AND DWG. NUMBER	VMA	DJR	DJR		8/22/10
A	REVISED PROFILE PER BLADE REDESIGN	JW	VMA	DJR	DJR	2/16/10
CHANGE LETTER	REVISION DESCRIPTION	DWN. BY:	CHK'D. BY:	APPV'D. BY:	APPV'D. BY:	DATE

G

ENGINEER OF RECORD: DANIEL J. RAU

ENGINEERING DISCIPLINE: CIVIL ENGINEER

REGISTRATION NUMBER: STATE OF FLORIDA #0063636

DWN. BY: JW	CHK. BY: JKS	APPV'D. BY: VMA	APPV'D. BY:
DATE: 1-13-99	DATE: 1/15/99	DATE: 1/18/99	DATE:

MATERIAL: 6063-T5 EXTRUDED ALUMINUM NOM WALL THICKNESS = .094

RUSKIN Mfg Grandview, MO

PROPRIETARY INFORMATION

TITLE: EME520MD HEAD W/ INT. FLANGE

PLOT SCALE: NONE

DWG. CERTIFIED BY: DATE:

DWG. NO. 60-021901-13B

SHEET 13 OF 18

DANIEL J. RAU
LICENSE NO. 63636
STATE OF FLORIDA
PROFESSIONAL ENGINEER
8/24/2010

HEAD – DWG 60-021901-18B	
6063-T5 extruded aluminum with .094" nominal wall thickness.	X
SILL – DWG 60-021901-20B	
6063-T5 extruded aluminum with .080" nominal wall thickness.	X
FRAME – DWG 60-021901-08B	
6063-T5 extruded aluminum with .080" nominal wall thickness. Caulking slots provided.	X
Flange frame. Same matl and thickness as above.	X
BLADES – DWG 60-021901-09B	
6063-T5 extruded aluminum with .080" nominal wall thickness, J style Blades are positioned at 20° angle.	X
SCREEN	
5/8" x .040" expanded flattened aluminum bird screen.	
1/2" mesh x .063" aluminum bird screen.	X
18-16 mesh alum insect screen	
No screen.	
FINISH	
Mill.	X
Kynar (opt).	
Baked enamel (modified fluoropolymer, 50% Kynar, opt).	
Color Anodize (opt).	
Clear Anodize (opt).	
Color:	
ACCESSORIES	
Blankoff panel.	
1 1/2" x 1 1/2" x 1/4" Continuous angles at perimeter	X

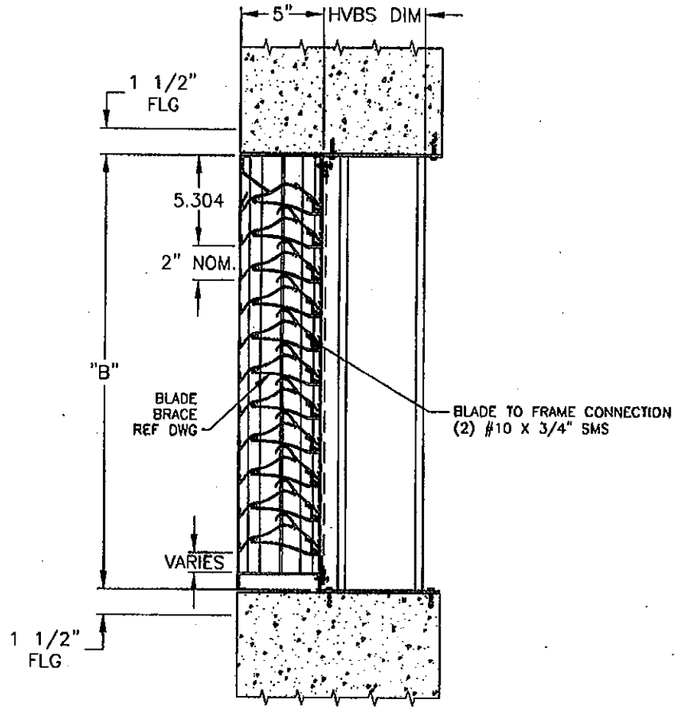

EME520MD

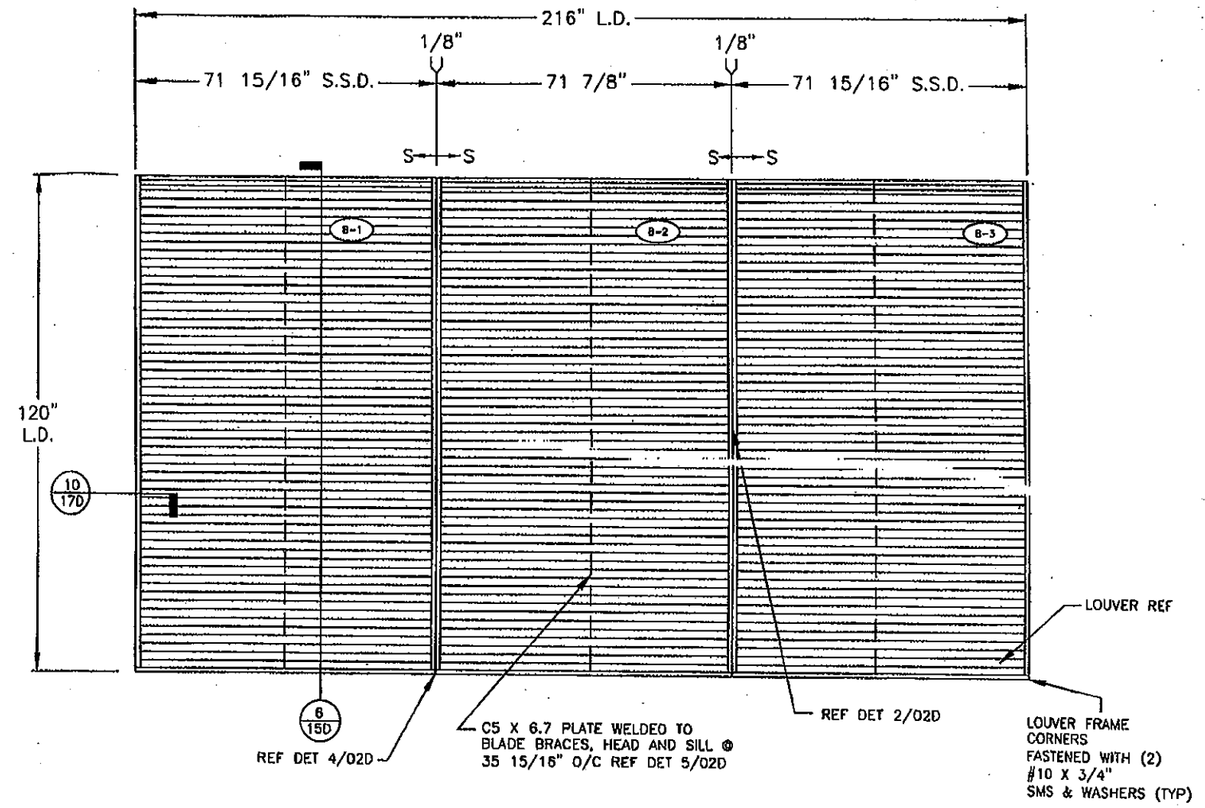

ASSEMBLY 'B'–NO SLEEVE
N.T.S.

FRONT VIEW

TESTS PERFORMED:
PA-201/TAS-201 LARGE MISSLE IMPACT
PA-202/TAS-202 UNIFORM STATIC AIR PRESSURE TEST
PA-203/TAS-203 CYCLIC WIND PRESSURE TEST
DESIGN PRESSURE RATING 140 PSF

NOTES:

1) THE EME520MD HAS BEEN TESTED IN ACCORDANCE WITH MIAMI-DADE COUNTY PROTOCOLS PA-201, 202 & 203 FOR LARGE MISSLE IMPACT, UNIFORM PRESSURE AND CYCLIC WIND PRESSURE.
2) THIS LOUVER SYSTEM IS APPROVED FOR APPLICATIONS WITH DESIGN PRESSURES OF +/- 140 PSF OR LESS.
3) THE LOUVER SYSTEM IS TO BE INSTALLED IN LOCATIONS WHERE THE ROOMS BEHIND THE LOUVERS ARE DESIGNED TO DRAIN WATER PENETRATING INTO THE ROOMS, AND THE ROOMS WILL HOUSE WATER RESISTANT/WATER PROOF EQUIPMENT, COMPONENTS OR SUPPLIES.
4) THIS LOUVER SYSTEM IS NON-BEARING AND IS NOT DESIGNED TO WITHSTAND BUILDING DEAD LOADS.
5) THIS LOUVER UTILIZES AN ANCHORLESS INSTALLATION METHOD THAT DOES NOT REQUIRE THE USE OF FASTENERS INTO THE WALL SUBSTRATE. IT MAY BE INSTALLED IN ANY WALL SUBSTRATE THAT WILL WITHSTAND THE LOADS TRANSFERRED TO IT BY THE LOUVER. RUSKIN DOES NOT DETERMINE THE STRUCTURAL INTEGRITY OF THE STRUCTURE.
6) MAXIMUM SINGLE SECTION SIZE: 71 15/16" WIDE X 120" HIGH.
7) MAXIMUM ASSEMBLED LOUVER SIZE: UNLIMITED WIDE X 120" HIGH. MAX. MULLION SPACING IS 71 15/16".
8) SECTIONS OR ASSEMBLIES MAY BE STACKED VERTICALLY PROVIDING A SUITABLE STRUCTURAL SUPPORT IS DESIGNED AND INSTALLED BY OTHERS TO SUPPORT ALL LOADS TRANSFERRED FROM THE LOUVER.

DANIEL J. RAU
LICENSE NO. 63636
STATE OF FLORIDA
PROFESSIONAL ENGINEER
8/24/2010

FOR OFFICE USE ONLY

PRODUCT RENEWED
as complying with the Florida Building Code
Acceptance No 11-0119.24
Expiration Date 02/23/2016
By
Miami Dade Product Control

PRODUCT REVISED
as complying with the Florida Building Code
Acceptance No 10-0831.08
Expiration Date 02/23/2011
By
Miami Dade Product Control Division

DANIEL J. RAU									
CIVIL ENGINEER									
STATE OF FLORIDA #0063636									
DRN. BY DRP	CHK. BY DJR	APP'D. BY DJR	APP'D. BY		CHANGE LETTER	REVISION DESCRIPTION	DRN. BY	CHK'D. BY	APP'D. BY	APP'D. BY	DATE
DATE 8/6/09	DATE 8/20/10	DATE 8/20/10	DATE								
RUSKIN Mfg Grandview, MO PROPRIETARY INFORMATION							PLOT SCALE NONE				
TITLE EME520MD LOUVER, CLIP ANGLE INSTALLATION SPEC, ASSY & NOTES,							DWG. NO. 60-021901-14D SHEET 14 OF 18				

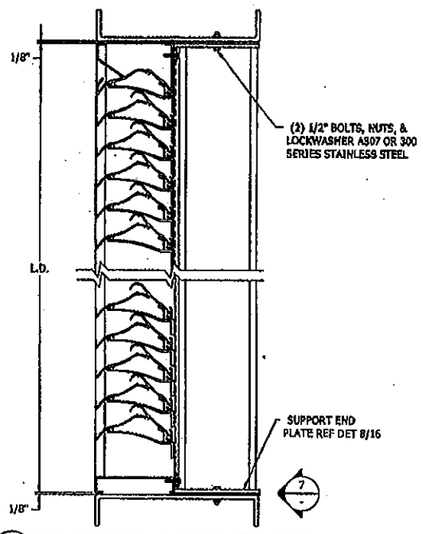

6 / 14D LOUVER DETAIL @ HEAD & SILL STEEL FRAME
N.T.S.
MINIMUM FRAME THICKNESS-14 GAUGE

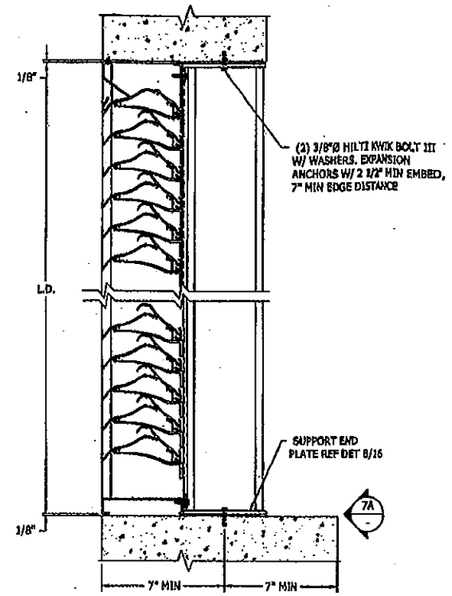

6A / 14D LOUVER DETAIL @ HEAD & SILL CONCRETE SLAB
N.T.S.
MINIMUM CONCRETE STRENGTH=3000 PSI

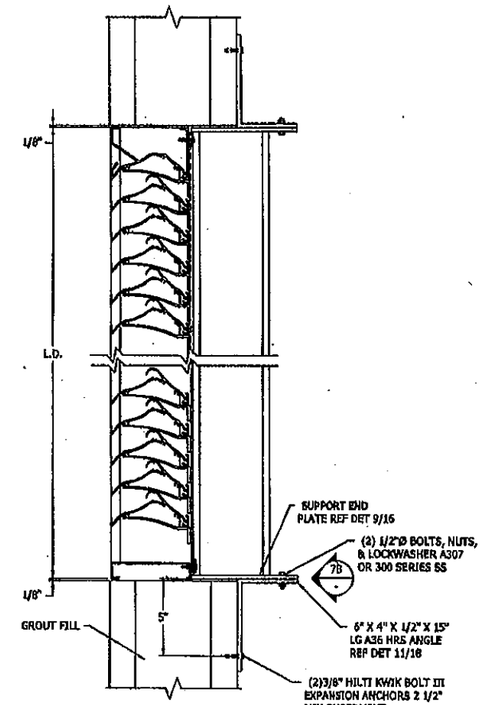

6B / 14D LOUVER DETAIL @ HEAD & SILL CMU BLOCK OR CONCRETE CURB
N.T.S.
CMU BLOCK TO BE GROUT FILLED
MIN CONCRETE CURB STRENGTH=3000 PSI

PRODUCT RENEWED
as complying with the Florida Building Code
Acceptance No 11-0119.24
Expiration Date 02/23/2016
By
Miami Dade Product Control

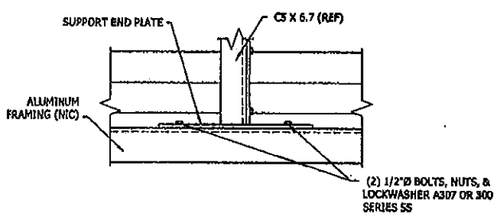

7 / - STEEL FRAME @ SILL DETAIL (HEAD SIM)
N.T.S.

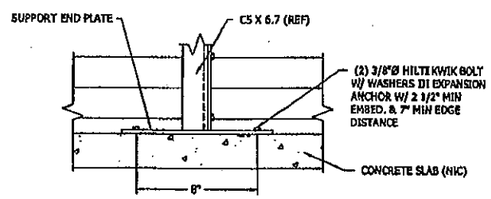

7A / - CONCRETE SLAB @ SILL DETAIL (HEAD SIM)
N.T.S.

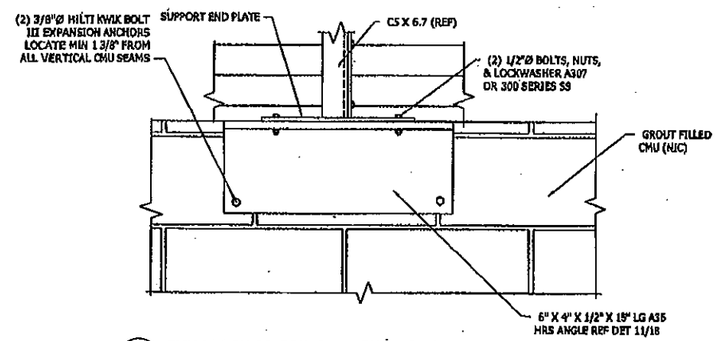

7B / - CMU BLOCK OR CONCRETE CURB @ SILL DETAIL (HEAD SIM)
N.T.S.

DANIEL J. RAU
LICENSE
NO. 63636
STATE OF FLORIDA
PROFESSIONAL ENGINEER
8/24/2010

FOR OFFICE USE ONLY

PRODUCT REVISED
as complying with the Florida Building Code
Acceptance No 10-0831.08
Expiration Date 02/23/2011
By
Miami Dade Product Control Division

DANIEL J. RAU	
ENGINEERING DISCIPLINE: CIVIL ENGINEER	
REGISTRATION NUMBER: STATE OF FLORIDA #0063636	
DWN BY: RBF DATE: 8/3/10 · CHK BY: DJR DATE: 8/20/10 · APPVD. BY: DJR DATE: 8/20/10 · APPVD. BY: DATE:	
DWNGS LETTER · REVISION DESCRIPTION · DWN BY · CHK'D BY · APPVD. BY · APPVD. BY · DATE	
RUSKIN Mfg Grandview, MO	PROPRIETARY INFORMATION
PLOT SCALE: NONE	CHKD. CERTIFIED BY: DATE:
TITLE: EME520MD LOUVER, CLIP ANGLE INSTALLATION & DETAILS	DWG. NO.: 60-021901-15D SHEET 15 OF 18

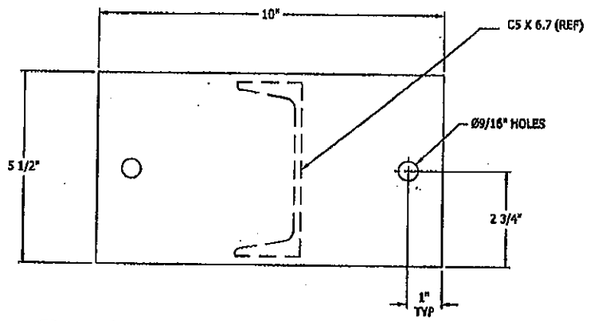

8 / 15D SUPPORT END PLATE- STL FRAMING & CONCRETE SLAB
N.T.S.
MAT'L: 1/4" THK A36 STL
COATING- MATCH SUPPORT

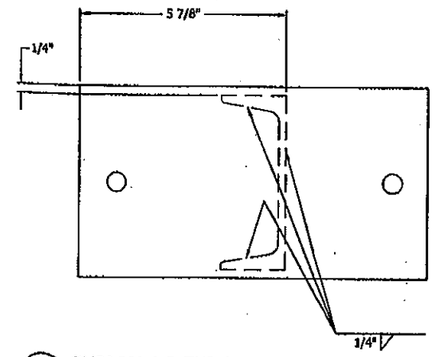

8A / 15D SUPPORT TO END PLATE WELD DETAIL
N.T.S.

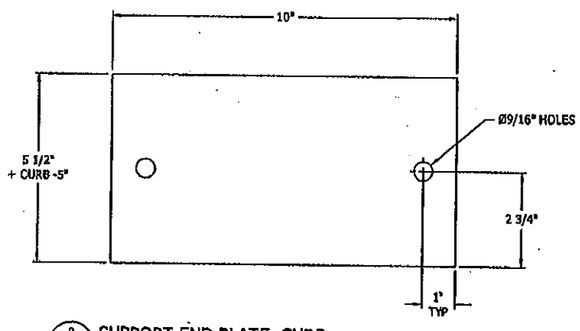

9 / 15D SUPPORT END PLATE- CURB
N.T.S.
MAT'L: 1/4" THK A36 STL

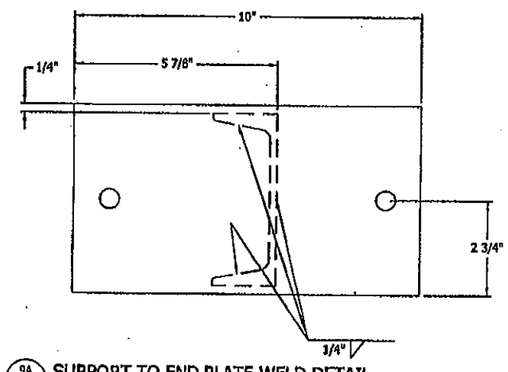

9A / 15D SUPPORT TO END PLATE WELD DETAIL
N.T.S.

PRODUCT RENEWED
as complying with the Florida
Building Code
Acceptance No 11-0119.29
Expiration Date 02/23/2016
By
Miami Dade Product Control

DANIEL J. RAU
LICENSE
NO. 63636
STATE OF
FLORIDA
PROFESSIONAL ENGINEER
8/24/2010

FOR OFFICE USE ONLY

PRODUCT REVISED
as complying with the Florida
Building Code
Acceptance No 10-0531.08
Expiration Date 02/23/2011
By
Miami Dade Product Control
Division

DANIEL J. RAU	
ENGINEERING DISCIPLINE: CIVIL ENGINEER	
REGISTRATION NUMBER: STATE OF FLORIDA #0063636	
DRN. BY: RBF DATE: 8/3/10	CHK. BY: DJR DATE: 8/20/10
APPV'D. BY: DJR DATE: 8/20/10	APPV'D. BY: DATE:

CHANGE LETTER	REVISION DESCRIPTION	DRN. BY	CHK'D. BY	APPV'D. BY	APPV'D. BY	DATE

RUSKIN SWARTWOUT PROPRIETARY INFORMATION
MOD. OR. DRAWS. BO CUNOVER, WO 84000
PLOT SCALE: NONE
ECN:
TITLE: CLIP ANGLE INSTALLATION & DETAILS
DWG. NO.: 60-021901-16D
SHEET 16 OF 18

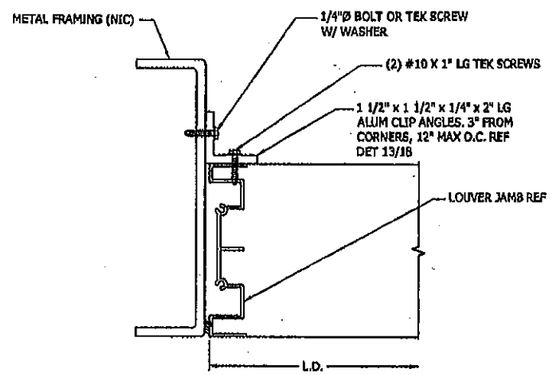

10 / 14D METAL FRAMING @ JAMB DETAIL
N.T.S.
WHEN FRAMING MAT'L IS ALUM: 1/8" MIN THK
WHEN FRAMING MAT'L IS STEEL: 14 GA MIN

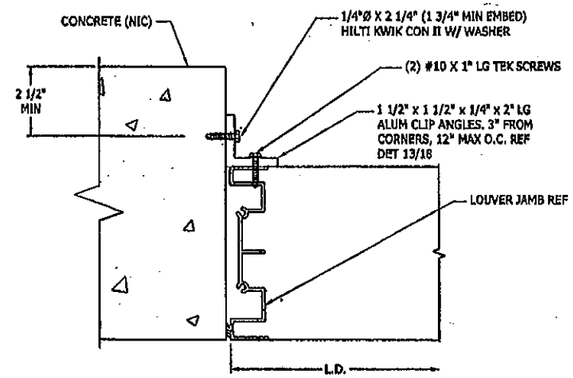

10A / 14D CONCRETE @ JAMB DETAIL
N.T.S.

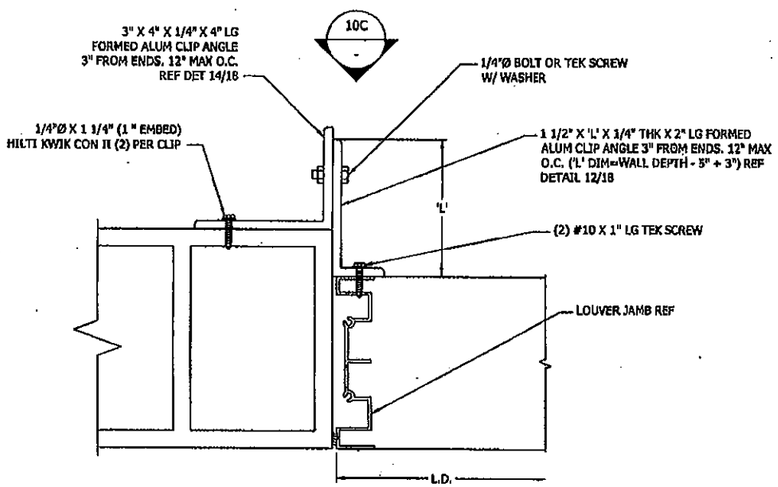

10B / 14D CMU BLOCK @ JAMB DETAIL
N.T.S.

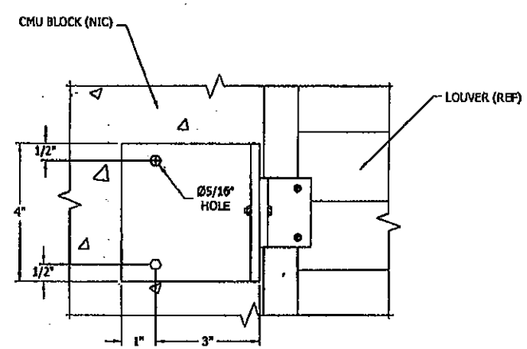

10C / 14D CMU BLOCK @ JAMB DETAIL
N.T.S.

PRODUCT RENEWED
as complying with the Florida Building Code
Acceptance No 11-0119.24
Expiration Date 02/23/2016
By
Miami Dade Product Control

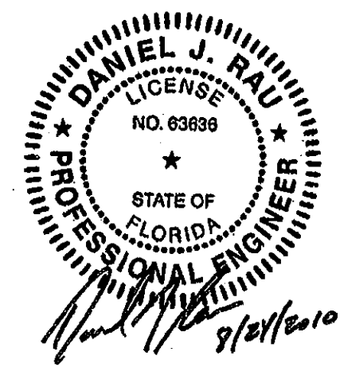

FOR OFFICE USE ONLY

PRODUCT REVISED
as complying with the Florida Building Code
Acceptance No 10-0831.08
Expiration Date 02/23/2011
By
Miami Dade Product Control Division

DANIEL J. RAU	
CIVIL ENGINEER	
STATE OF FLORIDA #0063636	
DWN. BY: RBF DATE: 8/23/10	CHK. BY: DJR DATE: 8/23/10 APPV'D. BY: DJR DATE: 8/23/10 APPV'D. BY: DATE:

CHANGE LETTER	REVISION DESCRIPTION	DWN. BY	CHK'D. BY	APPV'D. BY	APPV'D. BY	DATE

RUSKIN / EWA/CWELT — 3400 DR. CRAVER RD GRANDVIEW, MO 64030 PROPRIETARY INFORMATION

PLOT SCALE: NONE

ECN:

TITLE: EME520MD CLIP ANGLE INSTALLATION & DETAILS

DWG. NO.: 60-021901-17D

SHEET 17 OF 18

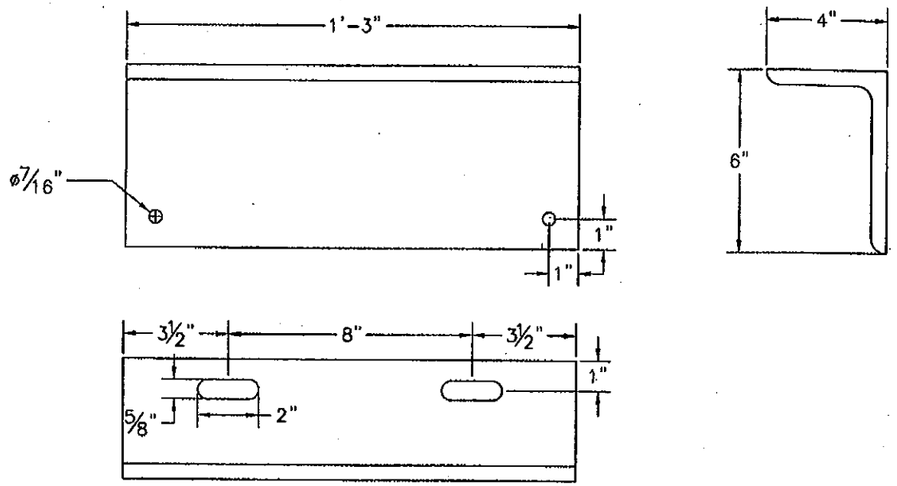

11/15 CMU VERTICAL SUPPORT ATTACHMENT ANGLE
MATERIAL: A36 HRS

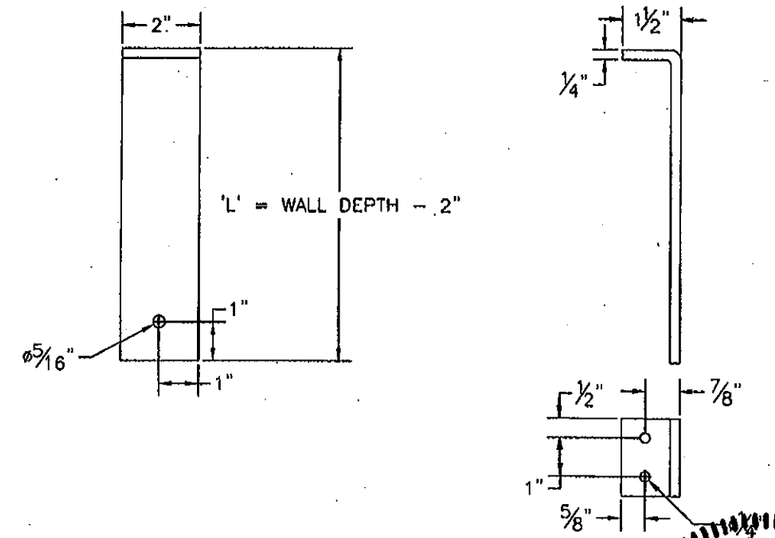

12/17 CMU LOUVER JAMB CLIP ANGLE
MATERIAL: ALUM 5052-32 OR 6063-T6

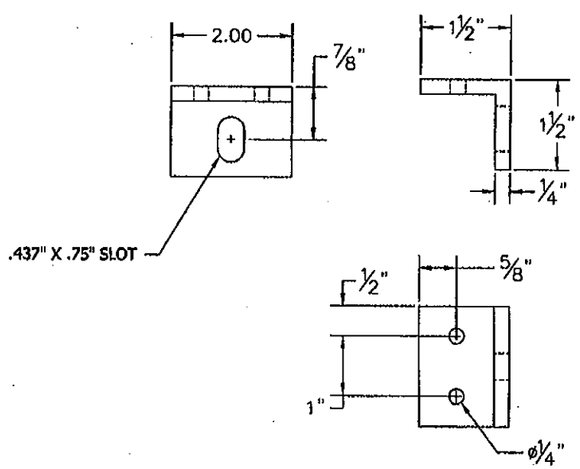

13/17 JAMB CLIP ANGLE
MATERIAL: ALUM 5052-H32 OR 6063-T6

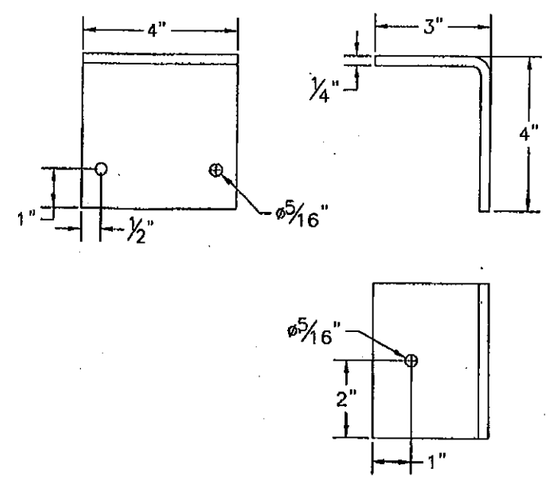

14/17 CMU JAMB TO WALL CLIP ANGLE
MATERIAL: ALUM 5052-H32 OR 6063-T6

DANIEL J. RAU
LICENSE NO. 63636
STATE OF FLORIDA
PROFESSIONAL ENGINEER
8/24/2010

FOR OFFICE USE ONLY

PRODUCT REVISED
as complying with the Florida Building Code
Acceptance No 10-0831.08
Expiration Date 02/23/2011
By
Miami Dade Product Control Division

PRODUCT RENEWED
as complying with the Florida Building Code
Acceptance No 11-0119.24
Expiration Date 02/23/2016
By
Miami Dade Product Control

DANIEL J. RAU
DISCIPLINE: CIVIL ENGINEER
REGISTRATION NUMBER: STATE OF FLORIDA #0063636

DRN. BY	CHK. BY	APPV'D. BY	APPV'D. BY
DRP	DJR	DJR	DJR
DATE 02-23-10	DATE 8/22/10	DATE 8/22/10	DATE

CHANGE LETTER	REVISION DESCRIPTION	DRN. BY	CHK'D. BY	APPV'D. BY	APPV'D. BY	DATE

RUSKIN / WARTSBUT — 3600 DR. GRAVES RD OKLAHOMA CITY, OK 74130 TELEPHONE: 800-000-0000

PLOT SCALE: NONE
ECN:

TITLE: EME520MD CLIP ANGLE DETAILS

DWG. NO. 60-021901-18D
SHEET 18 OF 18