MIAMI-DADE COUNTY
DEPARTMENT OF PERMITTING, ENVIRONMENT, AND REGULATORY AFFAIRS (PERA)
BOARD AND CODE ADMINISTRATION DIVISION

MIAMI-DADE COUNTY
PRODUCT CONTROL SECTION
11805 SW 26 Street, Room 208
Miami, Florida 33175-2474
T (786) 315-2590 F (786) 315-2599
www.miamidade.gov/pera/

NOTICE OF ACCEPTANCE (NOA)

Enclos Corporation
550 Fairway Drive
Deerfield Beach, FL 33441

SCOPE:

This NOA is being issued under the applicable rules and regulations governing the use of construction materials. The documentation submitted has been reviewed and accepted by Miami-Dade County PERA - Product Control Section to be used in Miami Dade County and other areas where allowed by the Authority Having Jurisdiction (AHJ).

This NOA shall not be valid after the expiration date stated below. The Miami-Dade County Product Control Section (In Miami Dade County) and/or the AHJ (in areas other than Miami Dade County) reserve the right to have this product or material tested for quality assurance purposes. If this product or material fails to perform in the accepted manner, the manufacturer will incur the expense of such testing and the AHJ may immediately revoke, modify, or suspend the use of such product or material within their jurisdiction. PERA reserves the right to revoke this acceptance, if it is determined by Miami-Dade County Product Control Section that this product or material fails to meet the requirements of the applicable building code.

This product is approved as described herein, and has been designed to comply with the Florida Building Code, including the High Velocity Hurricane Zone.

DESCRIPTION: Series "7545 Twin Span, Structurally Glazed" Aluminum Curtain Wall System – L.M.I.

APPROVAL DOCUMENT: Drawing No. **7545 – L.M.I.**, titled "7545 Series Curtainwall L.M.I.", sheets 1 through 61 of 61, dated 04/08/10 with revision #1 dated 09/24/10, prepared by manufacturer, signed and sealed by Robert D. McCauley, P.E., bearing the Miami-Dade County Product Control Approval stamp with the Notice of Acceptance number and approval date by the Miami-Dade County Product Control Section.

MISSILE IMPACT RATING: Large and Small Missile Impact Resistant

LABELING: Each unit shall bear a permanent label with the manufacturer's name or logo, city, state, model/series, and following statement: "Miami-Dade County Product Control Approved", unless otherwise noted herein.

RENEWAL of this NOA shall be considered after a renewal application has been filed and there has been no change in the applicable building code negatively affecting the performance of this product.

TERMINATION of this NOA will occur after the expiration date or if there has been a revision or change in the materials, use, and/or manufacture of the product or process. Misuse of this NOA as an endorsement of any product, for sales, advertising or any other purposes shall automatically terminate this NOA. Failure to comply with any section of this NOA shall be cause for termination and removal of NOA.

ADVERTISEMENT: The NOA number preceded by the words Miami-Dade County, Florida, and followed by the expiration date may be displayed in advertising literature. If any portion of the NOA is displayed, then it shall be done in its entirety.

INSPECTION: A copy of this entire NOA shall be provided to the user by the manufacturer or its distributors and shall be available for inspection at the job site at the request of the Building Official.

This NOA consists of this page 1 and evidence pages E-1, E-2, and E-3, as well as approval document mentioned above.

The submitted documentation was reviewed by **Manuel Perez, P.E.**

MIAMI-DADE COUNTY APPROVED

NOA No. 11-0125.01
Expiration Date: December 22, 2016
Approval Date: December 22, 2011

NOTICE OF ACCEPTANCE: EVIDENCE SUBMITTED

A. DRAWINGS

1. Manufacturer's die drawings and sections.
2. Drawing No **7545 – L.M.I.**, Sheets 1 through 61 of 61, titled "7545 Series Curtainwall L.M.I.", dated 04/08/10 with revision #1 dated 09/24/10, prepared by manufacturer, signed and sealed by Robert D. McCauley, P.E.

B. TESTS

1. Test reports on: 1) Air Infiltration Test, per FBC, TAS 202-94
   2) Uniform Static Air Pressure Test, Loading per FBC TAS 202-94
   3) Water Resistance Test, per FBC, TAS 202-94
   2) Large Missile Impact Test per FBC, TAS 201-9
   3) Cyclic Wind Pressure Loading per FBC, TAS 203-94

   along with marked-up drawings and installation diagram of aluminum curtain wall system prepared by Construction Research Laboratory, Inc., Test Report No. **CRL-7246, mock-up #2**, dated 4/21-09/25/08, signed and sealed by Nariman S. Balsara, P.E.
   (Originally submitted under OTA#08-1787, for 1450 Brickell Office Bldg.)
2. Test reports on: 1) Air Infiltration Test, per FBC, TAS 202-94
   2) Uniform Static Air Pressure Test, Loading per FBC TAS 202-94
   3) Water Resistance Test, per FBC, TAS 202-94

   along with marked-up drawings and installation diagram of aluminum curtain wall system prepared by Construction Research Laboratory, Inc., Test Report No. **CRL-7245B, mock-up #1**, dated 7/24/08 to 10/07/08, signed and sealed by Nariman S. Balsara, P.E.
   (Originally submitted under OTA#08-1714, for Town Center One at Dadeland)
3. Test reports on: 1) Air Infiltration Test, per FBC, TAS 202-94
   2) Uniform Static Air Pressure Test, Loading per FBC TAS 202-94
   3) Water Resistance Test, per FBC, TAS 202-94
   4) Small Missile Impact Test per FBC, TAS 201-94
   5) Cyclic Wind Pressure Loading per FBC, TAS 203-94

   along with marked-up drawings and installation diagram of aluminum curtain wall system prepared by Construction Research Laboratory, Inc., Test Report No. **CRL-7261, mock-up #1**, dated 9/11/08 to 10/08/08, signed and sealed by Nariman S. Balsara, P.E.
   (For reference only - submitted under OTA#09-1336, for MET 2 Project)
4. Test reports on: 1) Uniform Static Air Pressure Test, Loading per FBC TAS 202-94
   2) Small Missile Impact Test per FBC, TAS 201-94
   3) Cyclic Wind Pressure Loading per FBC, TAS 203-94

   along with marked-up drawings and installation diagram of aluminum curtain wall system prepared by Construction Research Laboratory, Inc., Test Report No. **CRL-7282B, mock-up #1A**, dated 11/13 to 26/08, signed and sealed by Nariman S. Balsara, P.E.
   (Originally submitted under OTA#08-1714, for Town Center One at Dadeland)

Manuel Perez, P.E.
Product Control Examiner
NOA No. 11-0125.01
Expiration Date: December 22, 2016
Approval Date: December 22, 2011

NOTICE OF ACCEPTANCE: EVIDENCE SUBMITTED

B. TESTS (CONTINUED)

5. Test report on: 1) Uniform Static Air Pressure Test, Loading per FBC TAS 202-94 along with marked-up drawings and installation diagram of aluminum curtain wall system prepared by Construction Research Laboratory, Inc., Test Report No. **CRL-7281B, mock-up #1B**, dated 11/25/08, signed and sealed by Nariman S. Balsara, P.E. ***(Originally submitted under OTA#08-1714, for Town Center One at Dadeland)***
6. Test reports on: 1) Uniform Static Air Pressure Test, Loading per FBC TAS 202-94
   2) Small Missile Impact Test per FBC, TAS 201-94
   3) Cyclic Wind Pressure Loading per FBC, TAS 203-94

   along with marked-up drawings and installation diagram of aluminum curtain wall system prepared by Hurricane Test Laboratory, LLC, Test Report No. **HTL-0434-0905-08, Specimen #1**, dated 09/17 to 24/08, signed and sealed by Vinu J. Abraham, P.E. ***(Originally submitted under OTA#08-1714, for Town Center One at Dadeland)***
7. Test reports on: 1) Air Infiltration Test, per FBC, TAS 202-94
   2) Uniform Static Air Pressure Test, Loading per FBC TAS 202-94
   3) Water Resistance Test, per FBC, TAS 202-94
   2) Large Missile Impact Test per FBC, TAS 201-9
   3) Cyclic Wind Pressure Loading per FBC, TAS 203-94

   along with marked-up drawings and installation diagram of aluminum curtain wall system prepared by Construction Research Laboratory, Inc., Test Report No. **CRL-7261A, mock-up #2**, dated 4/21-09/25/08, signed and sealed by Nariman S. Balsara, P.E. ***(Originally submitted OTA#09-1336, for MET 2 Project)***

C. CALCULATIONS:

1. Anchor calculations and structural analysis, complying with FBC-2007 and FBC-2010, prepared by manufacturer, dated 12/17/10 and 12/12/11, signed and sealed by Robert D. McCauley, P.E.
2. Glazing complies with ASTM E1300-04

D. QUALITY ASSURANCE

1. Miami-Dade Department of Permitting, Environment, and Regulatory Affairs (PERA).

E. MATERIAL CERTIFICATIONS

1. Notice of Acceptance No. **08-0520.08** issued to **Solutia, Inc.** for their "**Vanceva Composites Glass Interlayer**" dated 07/17/08, expiring on 12/11/13.

Manuel Perez, P.E.
Product Control Examiner
NOA No. 11-0125.01
Expiration Date: December 22, 2016
Approval Date: December 22, 2011

NOTICE OF ACCEPTANCE: EVIDENCE SUBMITTED

F. STATEMENTS

1. Statement letter of conformance with FBC-2007 and FBC-2010, dated December 12, 2011, signed and sealed by Robert D. McCauley, P.E.
2. Statement letter of no financial interest, dated January 13, 2011, signed and sealed by Robert D. McCauley, P.E.
3. Dow Corning Corp. Construction Industry System Laboratory Report – Sealant Adhesion, dated July 29, 2008 certifying testing/evaluation of Dow Corning **795 Silicone Building Sealant, Dow Corning 983SGS Structural Glazing Silicone** and Dow Corning **995 Silicone Structural Sealant** applications and recommendations for this specific job, prepared by Kevin Dunphy, Dow Corning Field Specialist.
4. Dow Corning Corp. Construction Industry System Laboratory Report – Sealant Compatibility, dated August 11, 2009 certifying testing/evaluation of Dow Corning **795 Silicone Building Sealant, Dow Corning 983SGS Structural Silicone** and **Dow Corning 995 Silicone Structural Sealant** applications and recommendations for this specific job, prepared by Kevin Dunphy, Dow Corning Field Specialist.

G. OTHERS

1. None.

Manuel Perez, P.E.
Product Control Examiner
NOA No. 11-0125.01
Expiration Date: December 22, 2016
Approval Date: December 22, 2011

ENCLOS CORP FLORIDA HURRICANE SYSTEMS
7545 SERIES TWIN-SPAN CURTAINWALL
4-SIDED STRUCTURALLY GLAZED WITH & WITHOUT FACE CAPS
LARGE MISSILE IMPACT RESISTANT

GENERAL NOTES

STRUCTURAL DESIGN AND PERFORMANCE IS BASED ON THE FOLLOWING STANDARDS AND CRITERIA

A. STRUCTURAL

1. LOADING
   A. DESIGN WINDLOAD EXTRIOR WALL: PER RWDI'S WIND TUNNEL STUDY DATED 8/19/05 TEST PRESSURES +113/-130.5 PSF

2. DEFLECTION CRITERIA
   A. DEFLECTION OF FRAMING MEMBERS PERPENDICULAR TO THE PLANE OF THE WALL SHALL NOT EXCEED L/180 or 1" PER F.B.C.
   B. MOCK-UP IS DESIGNED TO RESIST 1.5 TIMES DESIGN WIND LOAD WITH OUT FAILURE OR PERMANENT DEFORMATION GREATER THAN L/1000.
   C. DEFLECTION OF FRAMING MEMBERS PARALLEL TO THE PLANE OF THE WALL WHEN CARRYING ITS ITS FULL DEADLOAD, SHALL NOT EXCEED 1/360 OR THE SPAN BETWEEN SUPPORTS OR 1/8" WHICHEVER IS LESS.

3. WINDOW EQUIPMENT LOADING
   A. WINDOW WASHING ATTACHMENTS SHALL BE DESIGNED TO WITHSTAND AN ULTIMATE LOAD OF 600 LBS. ACTING PARALLEL TO AND PERPENDICULAR TO THE FACE OF THE BUILDING FOR 10 SECONDS.

B. GLASS

GLASS TO HAVE MINIMUM DESIGN FACTOR OF 2.5 WITH A MAXIMUM PROBABILITY OF BREAKAGE OF 8 LITES / 1000 LITES AT DESIGN WIND LOADING.

C. AIR INFILTRATION

1. FIXED AREAS
   AIR LEAKAGE SHALL NOT EXCEED 0.06 CFM PER SQUARE FOOT OF FIXED WALL AREA WHEN TESTED IN ACCORDANCE WITH ASTM E 283 AT A STATIC AIR PRESSURE DIFFERENTIAL OF 6.24 PSF.

D. WATER PENETRATION

1. NO UNCONTROLLED WATER PENETRATION, OTHER THAN CONDENSATION, SHALL OCCUR AT A STATIC AIR PRESSURE DIFFERENTIAL OF 15% OF THE GREATEST POSITIVE DESIGN WIND LOAD WHEN TESTED IN ACCORDANCE WITH ASTM E 331 OR AAMA 501.1

MATERIALS

A. ALUMINUM

1. ALL ALUMINUM SHEET: AA5005 H14, ASTM B 209 STRETCHER LEVELED AND STRESS RELIEVED.
2. TYPICAL ALUMINUM EXTRUSIONS: TO BE 6063-T6 EXCEPT VERTICAL MULLIONS TO BE 6005-T5.
3. ALUMINUM EXTRUDED ANCHORS AND LIFTING LUGS TO BE 6005-T5 ALLOY TEMPER AS REQUIRED BY CALCULATIONS.

B. FASTENERS

1. ALUM. TO ALUM. FASTENERS EXPOSED TO WEATHER AND MOISTURE ARE 300 SERIES STAINLESS STEEL
2. ALUM. TO ALUM. FASTENERS NOT EXPOSED TO WEATHER OR MOISTURE AND INBOARD OF THE WEATHER LINE ARE ASTM A 325 GRADE 5, OR GRADE 2 AS REQUIRED BY STRUCTURAL CALCULATIONS, AND ZINC PLATED TO MEET THE REQUIREMENTS OF ASTM B 633 CLASS FE/ZN 8 TYPE II
3. SELF DRILLING FASTENERS ARE DRIL-FLEX TYPE AS MANUFACTURTED BY ELCO INDUSTRIES WITH STALGARD CORROSION RESISTANT COATING.

C. GASKETS, BLOCKS AND ISOLATORS

1. SEE THE SCHEDULE SHEET C02 FOR FURTHER INFORMATION
2. SHIMS AT ANCHORS TO BE KOROLATH PADS

D. DISSIMILAR METAL PROTECTION

1. ALUMINUM TO STEEL - HEAVY COAT OF ZINC RICH PRIMER.

E. GLASS TYPES - LARGE MISSILE IMPACT

MONOLITHIC/LAMINATED GLASS MAKE-UP:

G1 — 1/4" CLEAR HEAT STRENGTHENED, .077 VANCEVA STORM INTER LAYER
1/4" CLEAR HEAT STRENGTHENED (COATING ON THE #2 SURFACE FOR SPANDREL)

INSULATED/LAMINATED GLASS MAKE-UP:

G2 — INNER LITE - 1/4" CLEAR HEAT STRENGTHENED, .077 VANCEVA STORM INTER LAYER
1/4" CLEAR HEAT STRENGTHENED, 1/2" AIR SPACE
OUTER LITE - 1/4" CLEAR TEMPERED (COATING ON THE #4 SURFACE FOR SPANDREL)

F. GLASS SIZES

1. SEE GLASS CHART ON SHEET 8/61.

DRAWING INDEX

SHEET	DESCRIPTION
1/61	COVER NOTES
2/61	SYMBOLS/GASKET SCHEDULE
3/61	FASTENER SCHEDULE
4/61	WASHERS/NUTS/SEALANT/GLAZING TAPE SCHEDULES
5/61	ELEVATIONS/PLANS
6/61	WALL SECTIONS
7/61	MULLION STEEL REINFORCING CHART
8/61	GLASS SIZE CHART/GLAZING DETAILS
9/61	VERTICAL DETAILS - (VERTICAL MULLION AT VISION GLASS)
10/61	VERTICAL DETAILS - (VERTICAL MULLION AT SPANDREL GLASS)
11/61	VERTICAL DETAILS - (INTERMEDIATE MULLION AT VISION GLASS)
12/61	VERTICAL DETAILS - (INTERMEDIATE MULLION AT SPANDREL GLASS)
13/61	VERTICAL DETAILS - (VERTICAL MULLION W/ EARS AT VISION GLASS)
14/61	VERTICAL DETAILS - (VERTICAL MULLION W/ EARS AT SPANDREL GLASS)
15/61	VERTICAL DETAILS - (90° O.C. VERTICAL MULLION AT VISION GLASS)
16/61	VERTICAL DETAILS - (90° O.C. VERTICAL MULLION AT SPANDREL GLASS)
17/61	VERTICAL DETAILS - (90° I.C. VERTICAL MULLION AT VISION GLASS)
18/61	VERTICAL DETAILS - (125.355° O.C. VERTICAL MULLION AT VISION GLASS)
19/61	VERTICAL DETAILS - (125.355° O.C. VERTICAL MULLION AT SPANDREL GLASS)
20/61	VERTICAL DETAILS - (70.779° O.C. VERTICAL MULLION AT VISION GLASS)
21/61	VERTICAL DETAILS - (70.779° O.C. VERTICAL MULLION AT SPANDREL GLASS)
22/61	ANCHOR DETAILS - (PLAN AT F.O. SLAB ANCHOR)
23/61	ANCHOR DETAILS - (PLAN AT F.O. SLAB ANCHOR)
24/61	ANCHOR DETAILS - (PLAN AT STUB MULLION F.O. SLAB ANCHOR)
25/61	ANCHOR DETAILS - (PLAN AT 90° O.C. F.O. SLAB ANCHOR)
26/61	ANCHOR DETAILS - (PLAN AT 90° O.C. F.O. SLAB ANCHOR)
27/61	ANCHOR DETAILS - (PLAN AT 90° I.C. F.O. SLAB ANCHOR)
28/61	ANCHOR DETAILS - (PLAN AT 90° I.C. F.O. SLAB ANCHOR)
29/61	HORIZONTAL DETAILS - (STUB MULLION CONNECTION TO HORIZONTALS)
30/61	ANCHOR DETAILS - (PLAN AT T.O. SLAB ANCHOR)
31/61	ANCHOR DETAILS - (PLAN AT INTERMEDIATE VERTICAL F.O. SLAB ANCHOR)
32/61	ANCHOR DETAILS - (PLAN AT INTERMEDIATE VERTICAL F.O. SLAB ANCHOR)
33/61	VERTICAL DETAILS - (VERT. MULLION AT VISION GLASS W/ INSULATED GLASS)
34/61	VERTICAL DETAILS - (JAMB AT VISION GLASS)
35/61	HORIZONTAL DETAILS - (INTERMEDIATE HORIZONTALS)
36/61	HORIZONTAL DETAILS - (STACK JOINT HORIZONTALS)
37/61	HORIZONTAL DETAILS - (STACK JOINT HORIZONTALS W/ EARS)
38/61	SILL DETAILS - (STARTER SILL HORIZONTALS)
39/61	SILL DETAILS - (INTERMEDIATE STARTER SILL HORIZONTALS)
40/61	HORIZONTAL DETAILS - (88.321° IN-SLOPE INTERMEDIATE HORIZONTALS)
41/61	HORIZONTAL DETAILS - (88.321° IN-SLOPE STACK JOINT HORIZONTALS)
42/61	SILL DETAILS - (88.321° IN-SLOPE INTERMEDIATE STARTER SILL HORIZONTALS)
43/61	HORIZONTAL DETAILS - (94.212° OUT-SLOPE INTERMEDIATE HORIZONTALS)
44/61	HORIZONTAL DETAILS - (94.212° OUT-SLOPE STACK JOINT HORIZONTALS)
45/61	SILL DETAILS - (94.212° OUT-SLOPE INTERMEDIATE STARTER SILL HORIZONTALS)
46/61	ANCHOR DETAILS - (SECTION AT F.O. SLAB ANCHOR W/ CHART)
47/61	ANCHOR DETAILS - (SECTION AT 88.321° IN-SLOPE F.O. SLAB ANCHOR)
48/61	ANCHOR DETAILS - (SECTION AT 94.212° OUT-SLOPE F.O. SLAB ANCHOR)
49/61	ANCHOR DETAILS - (SECTION AT T.O. SLAB ALTERNATE ANCHOR W/ CHART)
50/61	COPING DETAILS - (PARAPET COPING)
51/61	HORIZONTAL DETAILS - (INTERMEDIATE HORIZONTALS W/ INSULATED GLASS)
52/61	HORIZONTAL DETAILS - (STACK JOINT HORIZONTALS W/ INSULATED GLASS)
53/61	DIE SHAPES
54/61	DIE SHAPES
55/61	DIE SHAPES
56/61	DIE SHAPES
57/61	DIE SHAPES
58/61	DIE SHAPES
59/61	DIE SHAPES
60/61	DIE SHAPES
61/61	ISOMETRIC JOINERY DETAILS

Approved as complying with the Florida Building Code
Date DEC. 22, 2011
NOA# 11-0125.01
Miami Dade Product Control
By Manuel Perez

enclos corp
2770 Blue Water Rd.
Eagan, MN 55121
Tel. 651-796-6100
Fax 651-994-6360

No.	Sub. No.	Rev.	Date	Drawn By	Submittal/Revision Description
	1	-	24 SEP 10	MGD	1ST SUBMITTAL

ROBERT D. McCAULEY
PE 68037
ENCLOS CORP
2770 BLUE WATER RD.
EAGAN, MN 55121

STATE OF FLORIDA PROFESSIONAL ENGINEER ROBERT D. McCAULEY No 68037

11-2

Date	Scale
08 APR 10	N/A

Project No.
7545 - L.M.I.

Drawing Title
COVER NOTES
7545 SERIES
CURTAINWALL L.M.I.

Sheet No.
1/61

7545 HURRICANE CURTAINWALL

SYMBOLS

- GASKET
- ALUMINUM
- STEEL
- SEALANT
- SILICONE SHEET
- COPED AREA
- GLASS
- RIGID INSULATION
- CONCRETE
- MASONRY
- STONE
- PVC/PLASTIC
- BACKER ROD
- GLASS TYPE
- PANEL TYPE
- STONE TYPE
- FRAME TYPE
- DOOR MARK
- REVISION MARK
- FINISH TYPE/COLOR
- FINISH TYPE/COLOR

DETAIL # SHEET # OR – DETAIL REFERENCE
– DETAIL TITLE
ENCLOS DETAIL # ARCH. DETAIL #
ENCLOS SHEET # ARCH. SHEET #
ELEVATION # SHEET # – ELEVATION REFERENCE
SECTION # SHEET # – WALL SECTION REFERENCE
– ANCHOR REFERENCE
DETAIL # SHEET # – GRID LINE
– WORK POINT
W.P. – MATCH LINE
"A" "A" – ELEVATION BENCHMARK
ELEVATION =

U.M.D. – UNIT MODULE DIMENSION

▲ DEADLOAD ANCHOR SYMBOL
△ WINDLOAD ANCHOR SYMBOL
▬ DEADLOAD SHIM BLOCK

GASKET SCHEDULE

ENCLOS #	DESCRIPTION	PICTURE
HA103	PRIMARY BULB WEATHERSEAL GASKET AT STACK JOINT 70 +/-5 SHORE A DUROMETER SILICONE – BLACK	
HA105	BULB GASKET 70 +/-5 SHORE A DUROMETER E.P.D.M. – BLACK	
HA111	RAINSCREEN GASKET AT STACK JOINT 70 +/-5 SHORE A DUROMETER E.P.D.M. – BLACK	
HA114	RAINSCREEN GASKET AT SPLIT MULLIONS 70 +/-5 SHORE A DUROMETER SILICONE – BLACK	
HP122	INTERIOR GLAZING PRE-SET GASKET 70 +/-5 SHORE A DUROMETER SILICONE – BLACK	
HS100	THERMAL SEPARATOR	
HS104	SPACER AT STACK JOINT RIGID PVC	
HS112	THERMAL SEPARATOR	
HW127	EXTERIOR WEDGE GASKET 70 +/-5 SHORE A DUROMETER SILICONE – BLACK	
HB225	1" X 6" LG. SETTING BLOCK 85 +/-5 SHORE A DUROMETER SILICONE – BLACK	
HB227	5/8" X 5" LG. SETTING BLOCK 85 +/-5 SHORE A DUROMETER SILICONE – BLACK	

Approved as complying with the Florida Building Code
Date DEC. 22, 2011
NOA# 11-0125.01
Miami Dade Product Control
By [signature]

enclos corp
2770 Blue Water Rd.
Eagan, MN 55121
Tel. 651-796-6100
Fax 651-994-6360

Sub. No.	Rev. No.	Date	Drawn By	Submittal/Revision Description
1	-	24 SEP 10	MGD	1ST SUBMITTAL

ROBERT D. McCAULEY
PE 68037
ENCLOS CORP
2770 BLUE WATER RD.
EAGAN, MN 55121
COA 28468

Reviewed for Structural Integrity Only

ROBERT D. McCAULEY LICENSE No 68037 STATE OF FLORIDA PROFESSIONAL ENGINEER
11-2-11

Date	Scale
08 APR 10	N/A

Project No.
7545 – L.M.I.

Drawing Title
SYMBOLS / GASKET SCHEDULE
7545 SERIES
CURTAINWALL L.M.I.

Sheet No.
2/61

mparclusic – 10/Aug/11 8:55 AM

7545 HURRICANE CURTAINWALL

FASTENERS

ENCLOS #	DESCRIPTION	PICTURE
101SD	#10-16 X 3/4" UNDERCUT P.F.H. #3 POINT 300 SERIES S.S.	
101TS	#10-16 X 3/4" UNDERCUT P.F.H. TYPE AB 300 SERIES S.S.	
104SD	#10-16 X 1" UNDERCUT P.F.H. #3 POINT 300 SERIES S.S.	
200CF	#12-14 X 5/8" P.F.H. TYPE AB 300 SERIES S.S.	
201SD	#12-14 X 1" UNDERCUT P.F.H. #3 POINT DRIL-FLEX	
300EF	1/4-14 X 1 1/2" H.W.H. TYPE B DOG POINT W/ PLASTISOL WASHER 300 SERIES S.S.	
300SD	1/4-14 X 1" H.W.H. #3 POINT DRIL FLEX	
302HC	1/4-20 X 1" HEX CAP SCREW GRADE 5 ZINC PLATED	
305HC	1/4-20 X 1 3/4" HEX CAP SCREW GRADE 5 ZINC PLATED	
307HC	1/4-20 X 2 1/2" HEX CAP SCREW GRADE 5 ZINC PLATED	
316TS	1/4-14 X 1 1/2" SQUARE F.H. TYPE AB 300 SERIES S.S.	
401SD	5/16-24 X 1" H.W.H. #4 POINT 300 SERIES S.S.	(N.T.S.)
501CF	3/8-16 X 1 1/2" P.F.H. MACHINE SCREW GRADE 5 ZINC PLATED	(N.T.S.)
505HC	3/8-16 X 2" HEX CAP SCREW GRADE 5 ZINC PLATED	(N.T.S.)
506HC	3/8-16 X 2 1/2" HEX CAP SCREW GRADE 5 ZINC PLATED	(N.T.S.)
510HC	3/8-16 X 4 1/2" HEX CAP SCREW GRADE 5 ZINCE PLATED	(N.T.S.)
600EF	1/2-13 X 1/2" HEX SOCKET SET SCREW CUP POINT 300 SERIES S.S.	
601HC	1/2-13 X 1 1/4" HEX CAP SCREW GRADE 5 ZINC PLATED	(N.T.S.)

FASTENERS

603HC	1/2-13 X 1 3/4" HEX CAP SCREW GRADE 5 ZINC PLATED	(N.T.S.)
606HC	1/2-13 X 3" HEX CAP SCREW GRADE 5 ZINC PLATED	(N.T.S.)
610HC	1/2-13 X 5" HEX CAP SCREW GRADE 5 ZINC PLATED	(N.T.S.)
613HC	1/2-13 X 6 1/2" HEX CAP SCREW GRADE 5 ZINC PLATED	(N.T.S.)
700HC	5/8-11 X 1 3/4" HEX CAP SCREW GRADE 5 ZINC PLATED	(N.T.S.)
700MS	5/8-11 X 1 3/4" SOCKET HEAD MACHINE SCREW GRADE 5 ZINCE PLATED	(N.T.S.)
702HC	5/8-11 X 2 1/4" HEX CAP SCREW GRADE 5 ZINC PLATED	(N.T.S.)
803HC	3/4-10 X 2 1/2" HEX CAP SCREW GRADE 5 ZINC PLATED	(N.T.S.)
900HC	1-8 X 11" HEX CAP SCREW GRADE 5 ZINC PLATED	(N.T.S.)
901HC	1-8 X 12 1/2" HEX CAP SCREW GRADE 5 ZINC PLATED	(N.T.S.)

Approved as complying with the Florida Building Code
Date DEC. 22, 2011
NOA# 11-0125.01
Miami Dade Product Control
By Manuel Perez

ROBERT D. McCAULEY
STATE OF FLORIDA
PROFESSIONAL ENGINEER
No 68037

enclos corp
2770 Blue Water Rd.
Eagan, MN 55121
Tel. 651-796-6100
Fax 651-994-6360

Sub. No.	Rev. No.	Date	Drawn By	Submittal/Revision Description
1	-	24 SEP 10	MGD	1ST SUBMITTAL

ROBERT D. McCAULEY
PE 68037
ENCLOS CORP
2770 BLUE WATER RD.
EAGAN, MN 55121
COA 28468

Reviewed for Structural Integrity Only

Date SEPT 10 | Scale N/A

Project No.
7545 - L.M.I.

Drawing Title
FASTENER SCHEDULE 7545 SERIES CURTAINWALL L.M.I.

Sheet No.
3/61

mporotusic - 10/Aug/11 8:55 AM

7545 HURRICANE CURTAINWALL

WASHERS

ENCLOS #	DESCRIPTION	PICTURE
300W	1/4" STEEL FLAT WASHER ZINC PLATED	
301W	1/4" STEEL LOCK WASHER ZINC PLATED	
500W	3/8" STEEL FLAT WASHER ZINC PLATED	(N.T.S.)
501W	3/8" STEEL LOCK WASHER ZINC PLATED	(N.T.S.)
600W	1/2" STEEL FLAT WASHER ZINC PLATED	(N.T.S.)
601W	1/2" STEEL LOCK WASHER ZINC PLATED	(N.T.S.)
700W	5/8" STEEL FLAT WASHER ZINC PLATED	(N.T.S.)
701W	5/8" STEEL LOCK WASHER ZINC PLATED	(N.T.S.)
800W	3/4" STEEL FLAT WASHER ZINC PLATED	(N.T.S.)
801W	3/4" STEEL LOCK WASHER ZINC PLATED	(N.T.S.)
804W	1" STEEL FLAT WASHER ZINC PLATED	(N.T.S.)

NUTS

ENCLOS #	DESCRIPTION	PICTURE
300N	1/4--16 HEX NUT GRADE 5 ZINC PLATED	
500N	3/8-16 HEX NUT GRADE 5 ZINC PLATED	(N.T.S.)
600N	1/2-13 HEX NUT GRADE 5 ZINC PLATED	(N.T.S.)
700N	5/8-11 HEX NUT GRADE 5 ZINC PLATED	(N.T.S.)
800N	3/4-10 HEX NUT GRADE 5 ZINC PLATED	(N.T.S.)
900N	1-8 HEX FLANGE LOCK NUT GRADE 5 ZINC PLATED	(N.T.S.)

STRUCTURAL SEALANT

DESCRIPTION
DOW CORNING 983 OR 995

GLAZING TAPES

ENCLOS #	DESCRIPTION	PICTURE
FOAM TAPE	NORTON THERMALBOND V2108 FOAM GLAZING TAPE (1/4" X 1/4") 35± SHORE A DUROMETER - BLACK	

Approved as complying with the Florida Building Code
Date DEC. 22 2011
NOA# 11-0125.01
Miami Dade Product Control
By Manuel Perez

ROBERT D. McCAULEY
STATE OF FLORIDA
PROFESSIONAL ENGINEER
No. 68037
1-12-11

enclos corp
2770 Blue Water Rd.
Eagan, MN 55121
Tel. 651-796-6100
Fax 651-994-6360

Sub. No.	Rev. No.	Date	Drawn By	Submittal/Revision Description
1	-	24 SEP 10	MGD	1ST SUBMITTAL

ROBERT D. McCAULEY
PE 68037
ENCLOS CORP
2770 BLUE WATER RD.
EAGAN, MN 55121
(651) 28468

Reviewed for Structural Integrity Only

Date	Scale
06 APR 10	N/A

Project No.
7545 - L.M.I.

Drawing Title
WASHERS/NUTS/ SEALANT/GLAZING TAPE SCHEDULES 7545 SERIES CURTAINWALL L.M.I.

Sheet No.
4/61

mporatusic - 10/Aug/11 8:55 AM

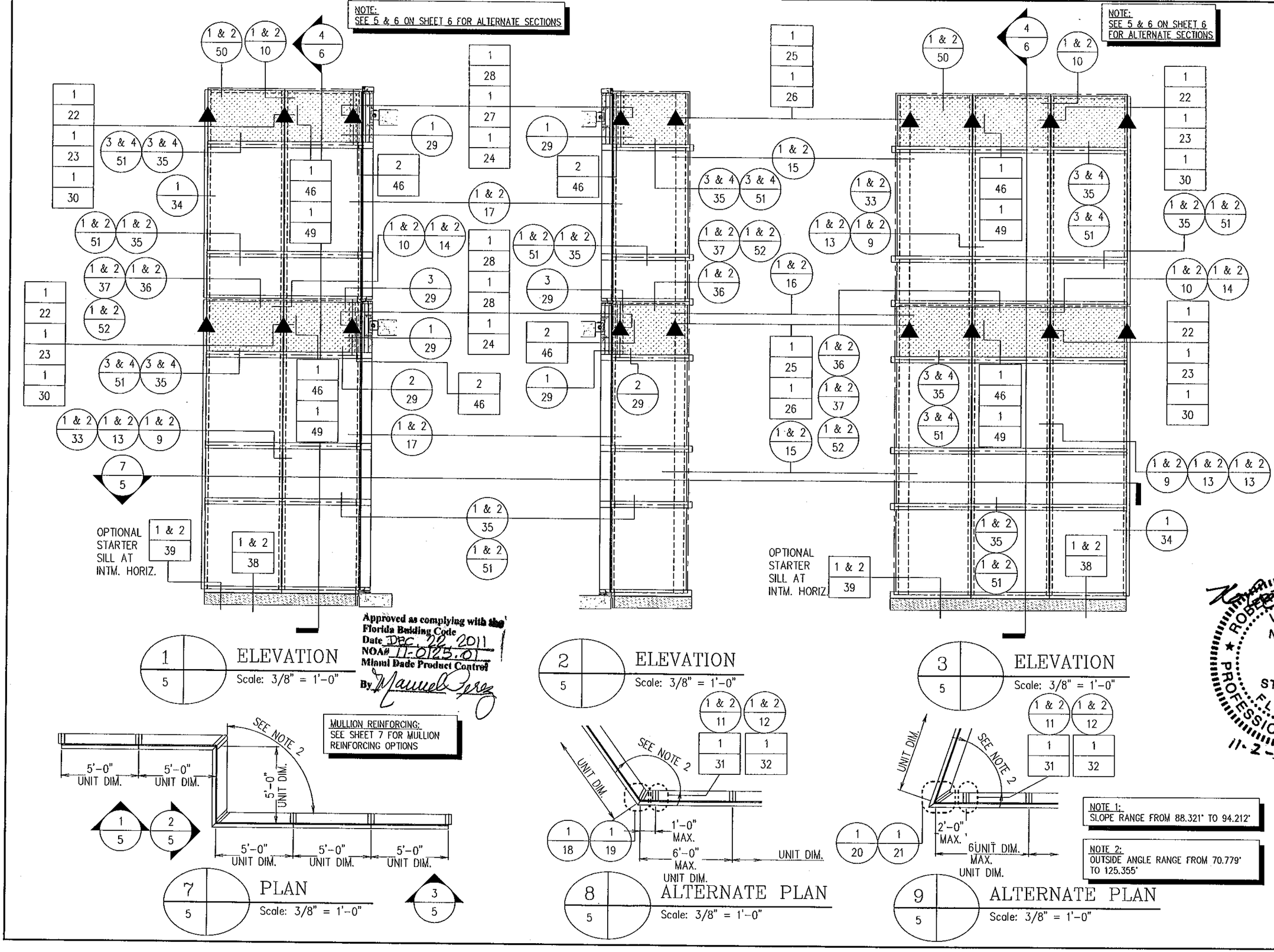

Approved as complying with the Florida Building Code
Date DEC. 22, 2011
NOA# 11-0125.01
Miami Dade Product Control
By Manuel Perez

enclos corp
2770 Blue Water Rd.
Eagan, MN 55121
Tel. 651-796-6100
Fax 651-994-6360

Sub. No.	Rev. No.	Date	Drawn By	Submittal/Revision Description
1	-	24 SEP 10	WPB	1ST SUBMITTAL

ROBERT D. McCAULEY
PE 68037
ENCLOS CORP
2770 BLUE WATER RD.
EAGAN, MN 55121
COA 28468

Reviewed for Structural Security Only

ROBERT D. McCAULEY LICENSED No 68037 STATE OF FLORIDA PROFESSIONAL ENGINEER 11-2-11

Date	Scale
06 APR 10	3/8"=1'-0"

Project No.
7545 - L.M.I.

Drawing Title
ELEVATIONS, PLANS
7545 SERIES
CURTAINWALL L.M.I.

Sheet No.
5/61

mparalusic - 25/Oct/11 7:59 AM

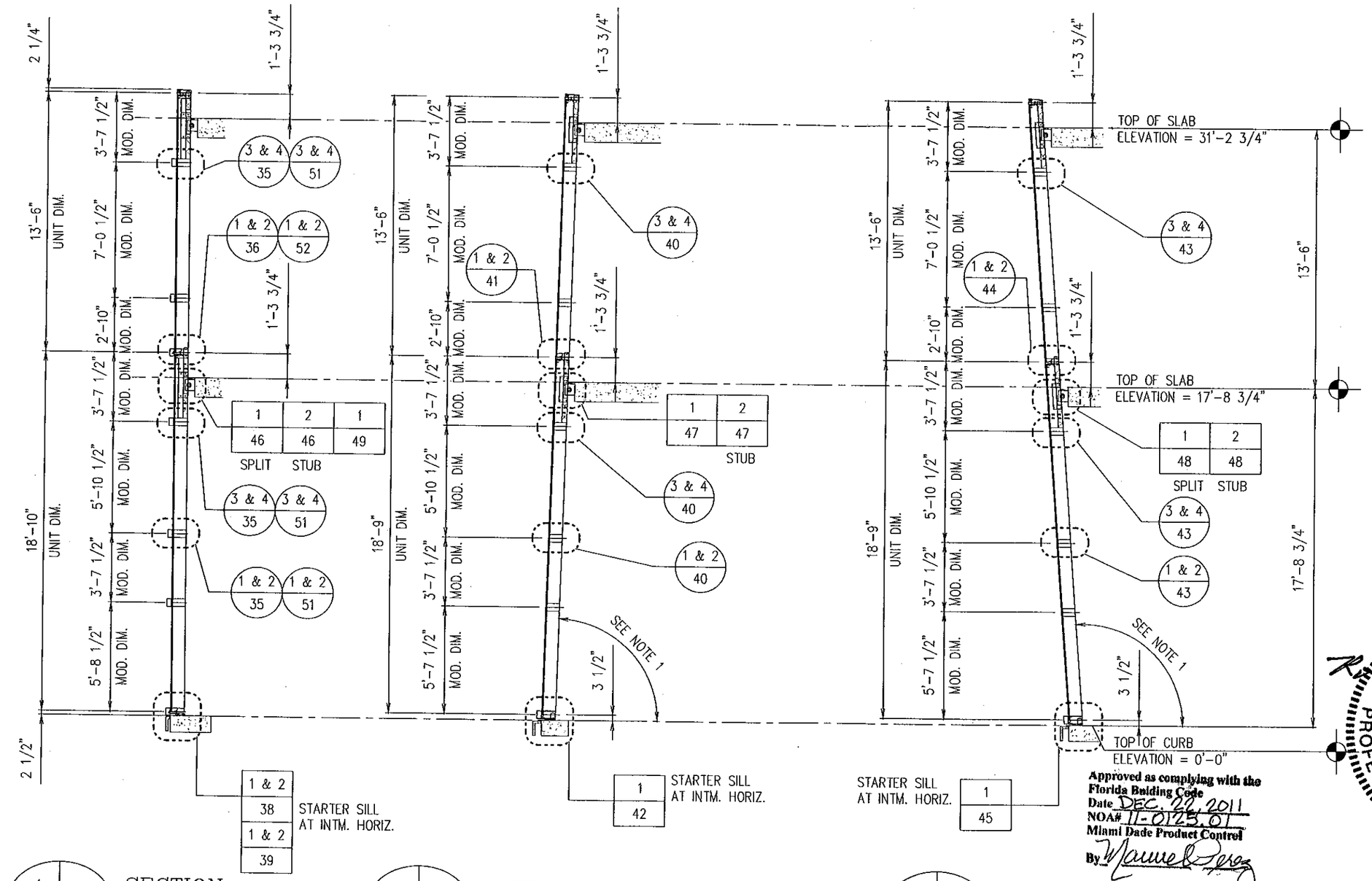

Approved as complying with the Florida Building Code
Date DEC. 22, 2011
NOA# 11-0125.01
Miami Dade Product Control
By Maurice Perez

4 / 6 SECTION
Scale: 3/8" = 1'-0"

5 / 6 ALTERNATE SECTION
Scale: 3/8" = 1'-0"

6 / 6 ALTERNATE SECTION
Scale: 3/8" = 1'-0"

enclos corp
2770 Blue Water Rd.
Eagan, MN 55121
Tel. 651-796-6100
Fax 651-994-6360

Sub. No.	Rev. No.	Date	Drawn By	Submittal/Revision Description
1	-	24 SEP 10	WPB	1ST SUBMITTAL

ROBERT D. McCAULEY
PE 68037
ENCLOS CORP
2770 BLUE WATER RD.
EAGAN, MN 55121
COA 28468

Reviewed
Structural Integrity Only

ROBERT D. McCAULEY
LICENSE No. 68037
STATE OF FLORIDA
PROFESSIONAL ENGINEER
11-2-11

Date 26 APR 11
Scale 3/8"=1'-0"

Project No.
7545 - L.M.I.

Drawing Title
WALL SECTIONS
7545 SERIES
CURTAINWALL L.M.I.

Sheet No.
6/61

mporotusic - 25/Oct/11 8:32 AM

MAXIMUM DESIGN PRESSURES (P.S.F.) FOR VARIOUS MULLION OPTIONS				
MODULE WIDTH	MULLION HEIGHT (L)	MULLION TYPE 1	MULLION TYPE 2	MULLION TYPE 3
	18'-10"			
6'-0"				+/-104
5'-9"				+/-109
5'-6"				+113/-114
5'-0"				+113/-125
4'-9"				+113/-130.5
4'-6"			+/-95	+113/-130.5
4'-3"			+/-101	+113/-130.5
4'-0"			+/-107	+113/-130.5
	17'-6 1/4"			
6'-0"			+/-95	+113/-130.5
5'-9"			+/-99	+113/-130.5
5'-6"			+/-104	+113/-130.5
5'-0"			+113/-114	+113/-130.5
4'-9"			+113/-120	+113/-130.5
4'-6"			+113/-127	+113/-130.5
4'-3"			+113/-130.5	+113/-130.5
4'-0"			+113/-130.5	+113/-130.5
	16'-6"			
6'-0"			+113/-121	+113/-130.5
5'-9"			+113/-126	+113/-130.5
5'-6"			+113/-130.5	+113/-130.5
5'-0"			+113/-130.5	+113/-130.5
4'-9"			+113/-130.5	+113/-130.5
4'-6"			+113/-130.5	+113/-130.5
4'-3"			+113/-130.5	+113/-130.5
4'-0"			+113/-130.5	+113/-130.5
	15'-6"			
6'-0"			+113/-130.5	+113/-130.5
5'-9"			+113/-130.5	+113/-130.5
5'-6"			+113/-130.5	+113/-130.5
5'-0"		+/-100	+113/-130.5	+113/-130.5
4'-9"		+/-105	+113/-130.5	+113/-130.5
4'-6"		+/-111	+113/-130.5	+113/-130.5
4'-3"		+113/-117	+113/-130.5	+113/-130.5
4'-0"		+113/-125	+113/-130.5	+113/-130.5
	14'-6"			
6'-0"		+/-104	+113/-130.5	+113/-130.5
5'-9"		+/-109	+113/-130.5	+113/-130.5
5'-6"		+113/-114	+113/-130.5	+113/-130.5
5'-0"		+113/-125	+113/-130.5	+113/-130.5
4'-9"		+113/-130.5	+113/-130.5	+113/-130.5
4'-6"		+113/-130.5	+113/-130.5	+113/-130.5
4'-3"		+113/-130.5	+113/-130.5	+113/-130.5
4'-0"		+113/-130.5	+113/-130.5	+113/-130.5

MAXIMUM DESIGN PRESSURES (P.S.F.) FOR VARIOUS MULLION OPTIONS				
MODULE WIDTH	MULLION HEIGHT (L)	MULLION TYPE 1	MULLION TYPE 2	MULLION TYPE 3
	13'-6"			
6'-0"		+113/-129	+113/-130.5	+113/-130.5
5'-9"		+113/-130.5	+113/-130.5	+113/-130.5
5'-6"		+113/-130.5	+113/-130.5	+113/-130.5
5'-0"		+113/-130.5	+113/-130.5	+113/-130.5
4'-9"		+113/-130.5	+113/-130.5	+113/-130.5
4'-6"		+113/-130.5	+113/-130.5	+113/-130.5
4'-3"		+113/-130.5	+113/-130.5	+113/-130.5
4'-0"		+113/-130.5	+113/-130.5	+113/-130.5
	12'-6"			
6'-0"		+113/-130.5	+113/-130.5	+113/-130.5
5'-9"		+113/-130.5	+113/-130.5	+113/-130.5
5'-6"		+113/-130.5	+113/-130.5	+113/-130.5
5'-0"		+113/-130.5	+113/-130.5	+113/-130.5
4'-9"		+113/-130.5	+113/-130.5	+113/-130.5
4'-6"		+113/-130.5	+113/-130.5	+113/-130.5
4'-3"		+113/-130.5	+113/-130.5	+113/-130.5
4'-0"		+113/-130.5	+113/-130.5	+113/-130.5
	11'-6"			
6'-0"		+113/-130.5	+113/-130.5	+113/-130.5
5'-9"		+113/-130.5	+113/-130.5	+113/-130.5
5'-6"		+113/-130.5	+113/-130.5	+113/-130.5
5'-0"		+113/-130.5	+113/-130.5	+113/-130.5
4'-9"		+113/-130.5	+113/-130.5	+113/-130.5
4'-6"		+113/-130.5	+113/-130.5	+113/-130.5
4'-3"		+113/-130.5	+113/-130.5	+113/-130.5
4'-0"		+113/-130.5	+113/-130.5	+113/-130.5
	10'-6"			
6'-0"		+113/-130.5	+113/-130.5	+113/-130.5
5'-9"		+113/-130.5	+113/-130.5	+113/-130.5
5'-6"		+113/-130.5	+113/-130.5	+113/-130.5
5'-0"		+113/-130.5	+113/-130.5	+113/-130.5
4'-9"		+113/-130.5	+113/-130.5	+113/-130.5
4'-6"		+113/-130.5	+113/-130.5	+113/-130.5
4'-3"		+113/-130.5	+113/-130.5	+113/-130.5
4'-0"		+113/-130.5	+113/-130.5	+113/-130.5
	10'-0"			
6'-0"		+113/-130.5	+113/-130.5	+113/-130.5
5'-9"		+113/-130.5	+113/-130.5	+113/-130.5
5'-6"		+113/-130.5	+113/-130.5	+113/-130.5
5'-0"		+113/-130.5	+113/-130.5	+113/-130.5
4'-9"		+113/-130.5	+113/-130.5	+113/-130.5
4'-6"		+113/-130.5	+113/-130.5	+113/-130.5
4'-3"		+113/-130.5	+113/-130.5	+113/-130.5
4'-0"		+113/-130.5	+113/-130.5	+113/-130.5

Approved as complying with the Florida Building Code
Date DEC. 22, 2011
NOA# 11-0725.01
Miami Dade Product Control
By Manuel Perez

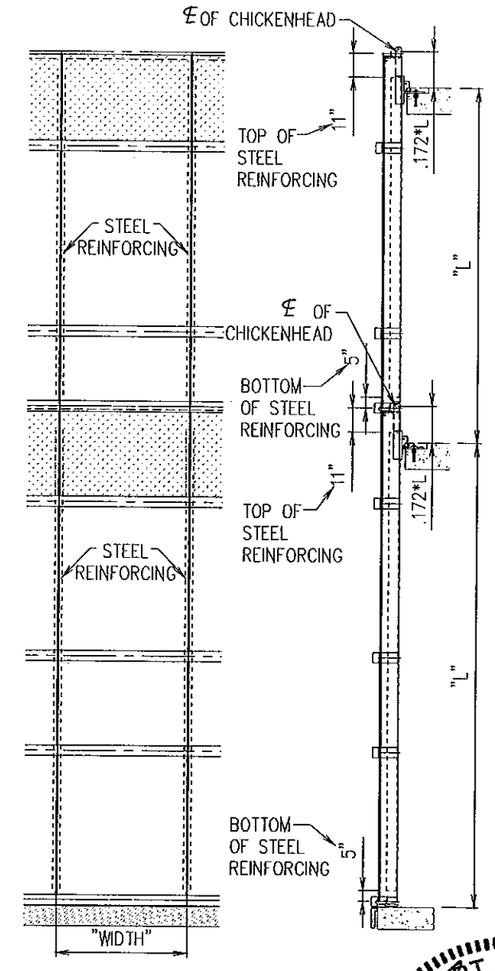

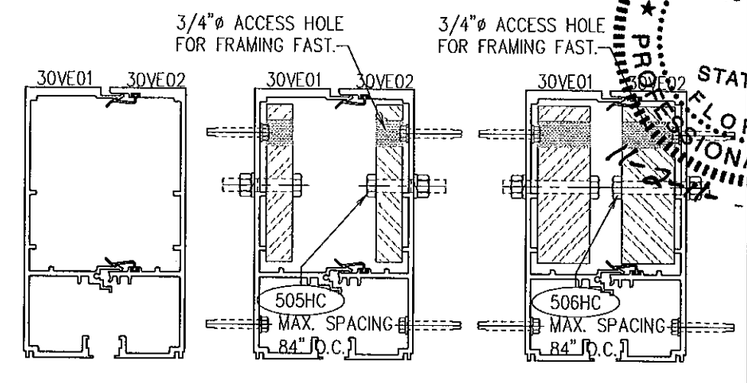

MULLION TYPE 1
30VE01 & 30VE02 WITH NO STEEL REINFORCING
S = 9.68 in3
I = 37.57 in4

MULLION TYPE 2
30VE01 & 30VE02 WITH (2) 3/4" X 4 1/2" STEEL BARS
S = 24.36 in3
I = 70.60 in4

MULLION TYPE 3
30VE01 & 30VE02 WITH (2) 1 1/2"X4 1/2" STEEL BARS
S = 39.03 in3
I = 103.63 in4

enclos corp®
2770 Blue Water Rd.
Eagan, MN 55121
Tel. 651-796-6100
Fax 651-994-6360

Sub. No.	Rev. No.	Date	Drawn By	Submittal/Revision Description
1	-	24 SEP 10	MCD	1ST SUBMITTAL

ROBERT D. McCAULEY
PE 68037
ENCLOS CORP
2770 BLUE WATER RD.
EAGAN, MN 55121
COA 28468

Reviewed For Structural Integrity Only

ROBERT D. McCAULEY No 68037 STATE OF FLORIDA PROFESSIONAL ENGINEER

Date 24 SEP 10
Scale N/A
Project No. 7545 - L.M.I.

Drawing Title
MULLION STEEL REINFORCING CHART 7545 SERIES CURTAINWALL L.M.I.

Sheet No. 7/61

mporotusic - 5/Aug/11 1:32 PM

MAX. DESIGN PRESSURES (P.S.F.) FOR VARIOUS GLASS TYPES			
GLASS WD. (W) D.L.O.	GLASS HGT. (H) D.L.O.	GLASS TYPES (MONOLITHIC LAMINATED AND LAMINATED /INSULATED - LARGE MISSILE IMPACT)	
		G1	G2
42" 48" 52" 54" 57" 60"	72"	+113/-130.5	
42" 48" 52" 54"	78"		
42" 48" 52"	84"		
42" 48"	90"	+113/-130.5	

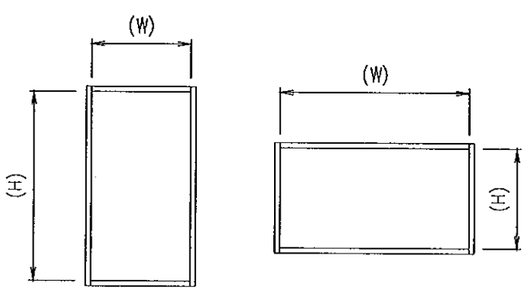

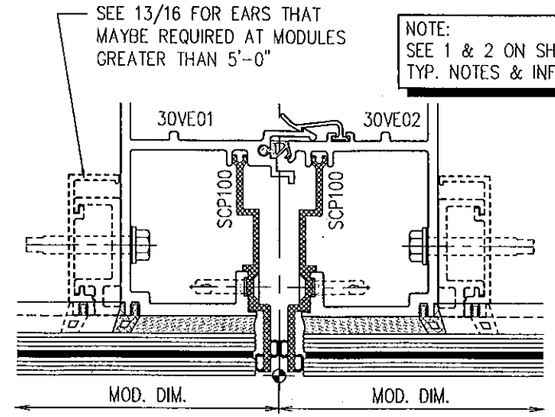

1 – GLAZING DETAIL
8 –
Scale: FULL AT G1 GLASS TYPE

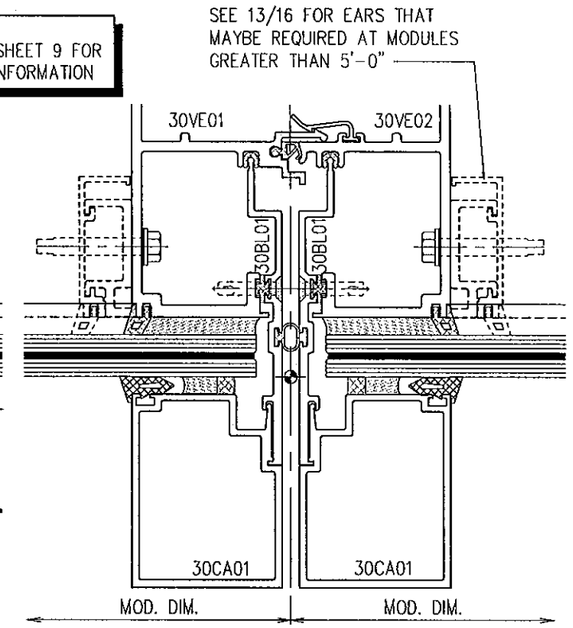

2 – GLAZING DETAIL
8 –
Scale: FULL AT G1 GLASS TYPE W/ COVERS

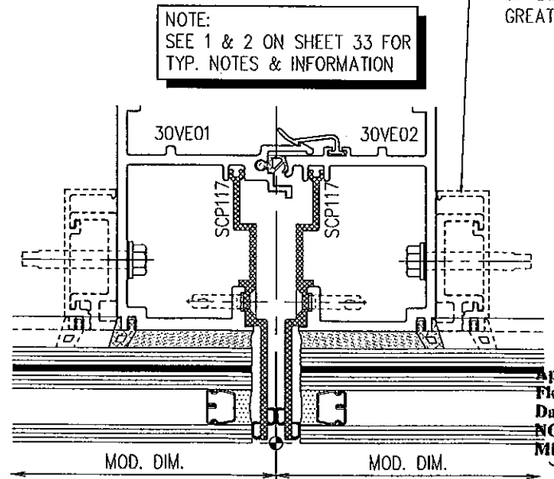

Approved as complying with the Florida Buiding Code
Date DEC. 22, 2011
NOA# 11-0125.01
Miami Dade Product Control
By Manuel Perez

3 – GLAZING DETAIL
8 –
Scale: FULL AT G2 GLASS TYPE

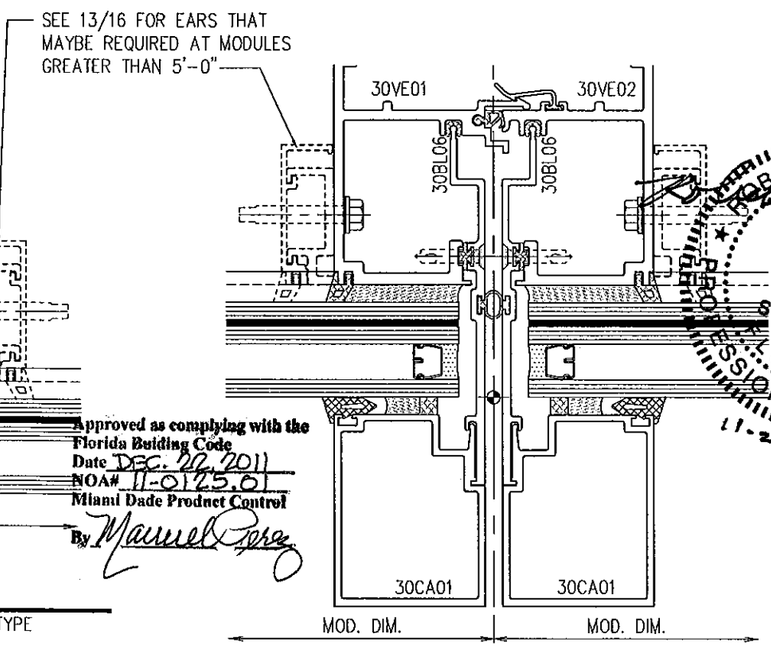

4 – GLAZING DETAIL
8 –
Scale: FULL AT G2 GLASS TYPE W/ COVERS

enclos corp
2770 Blue Water Rd.
Eagan, MN 55121
Tel. 651-796-6100
Fax 651-994-6360

No.	Sub.Rev. No.	Date	Drawn By	Submittal/Revision Description
1	-	24 SEP 10	MCD	1ST SUBMITTAL

ROBERT D. McCAULEY
PE 68037
ENCLOS CORP
2770 BLUE WATER RD.
EAGAN, MN 55121

ROBERT D. McCAULEY No 68037 STATE OF FLORIDA PROFESSIONAL ENGINEER 11-2-11

Date 06 JUN 10
Scale N/A
Project No. 7545 - L.M.I.
Drawing Title
GLASS SIZE CHART 7545 SERIES CURTAINWALL L.M.I.
Sheet No. 8/61

mwitzel - 26/Oct/11 12:57 PM

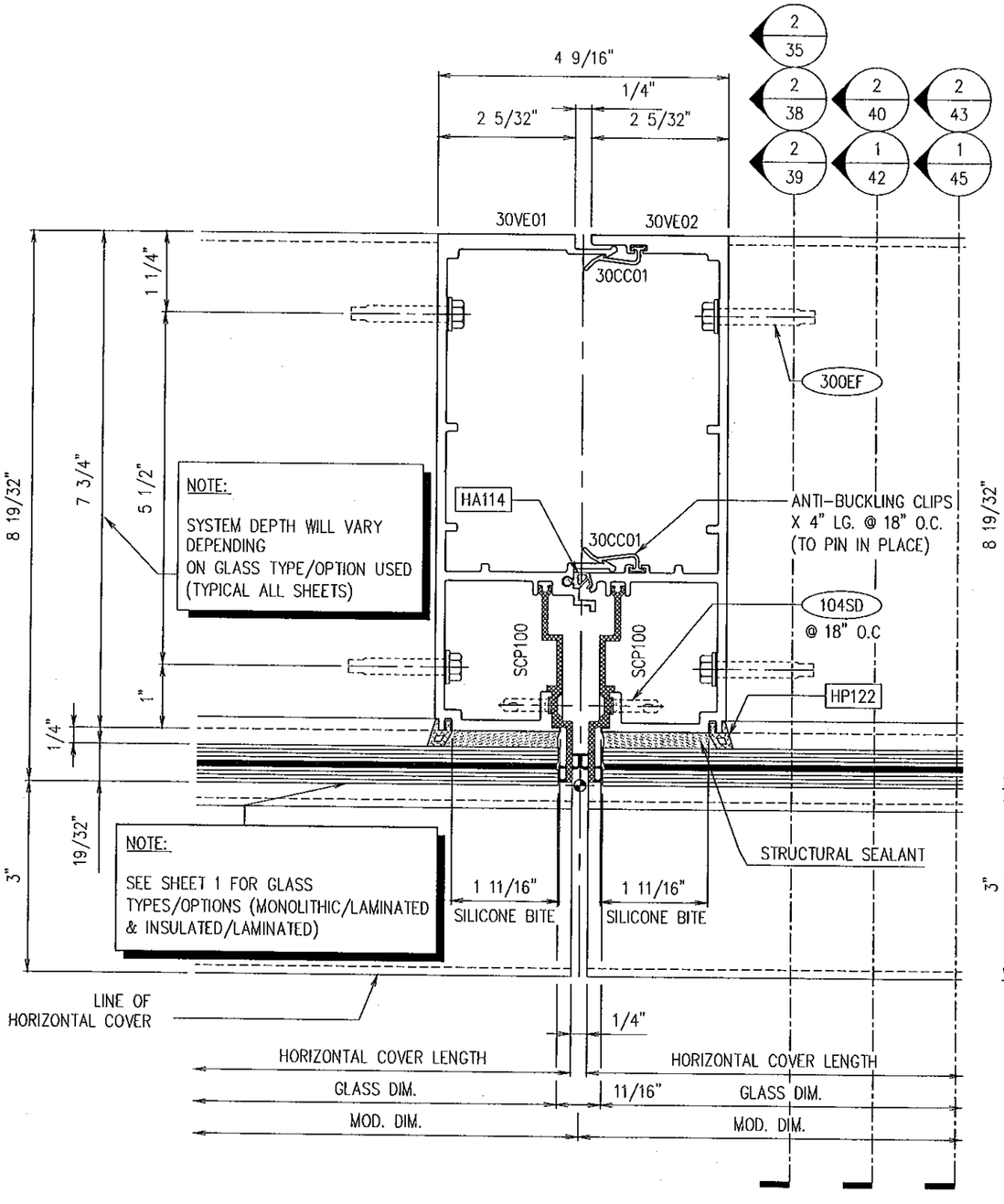

NOTE:

SYSTEM DEPTH WILL VARY DEPENDING ON GLASS TYPE/OPTION USED (TYPICAL ALL SHEETS)

NOTE:

SEE SHEET 1 FOR GLASS TYPES/OPTIONS (MONOLITHIC/LAMINATED & INSULATED/LAMINATED)

NOTE:

SEE SHEET 33 FOR INSULATED/LAMINATED GLASS OPTION

1 — 9 —

VERTICAL @ VISION W/O COVERS

Scale: FULL

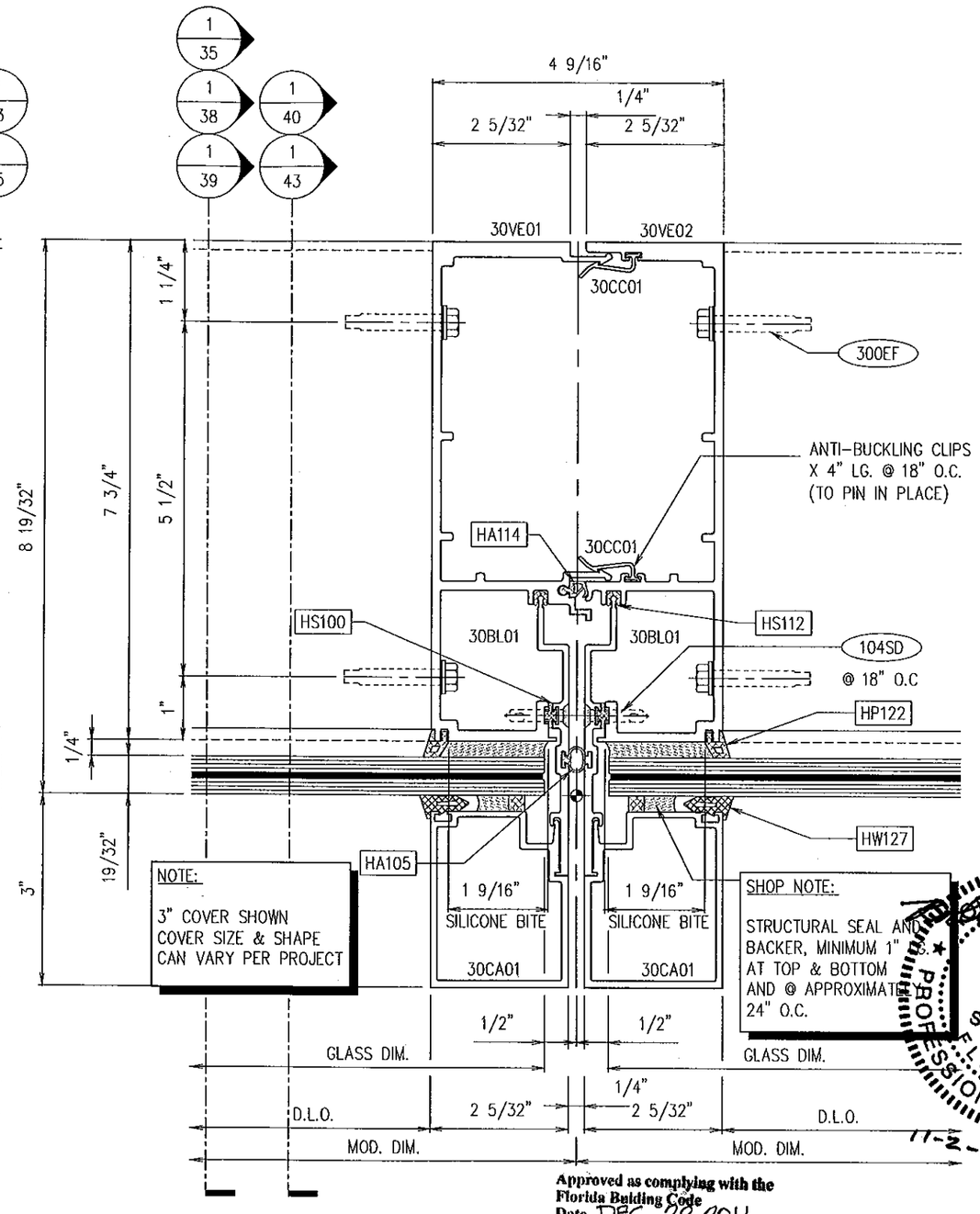

NOTE:

3" COVER SHOWN COVER SIZE & SHAPE CAN VARY PER PROJECT

SHOP NOTE:

STRUCTURAL SEAL AND BACKER, MINIMUM 1" AT TOP & BOTTOM AND @ APPROXIMATELY 24" O.C.

Approved as complying with the Florida Building Code
Date DEC. 22 2011
NOA# 11-0125.01
Miami Dade Product Control
By Manuel Perez

2 — 9 —

VERTICAL @ VISION W/ COVERS

Scale: FULL

enclos corp
2770 Blue Water Rd.
Eagan, MN 55121
Tel. 651-796-6100
Fax 651-994-6360

Sub. No.	Rev. No.	Date	Drawn By	Submittal/Revision Description
1	–	24 SEP 10	MGD	1ST SUBMITTAL

ROBERT D. McCAULEY
PE 68037
ENCLOS CORP
2770 BLUE WATER RD.
EAGAN, MN 55121

Reviewed for Structural Adequacy Only

ROBERT D. McCAULEY No 68037 STATE OF FLORIDA PROFESSIONAL ENGINEER

11-2-11

Date 23 MAR 10

Scale FULL

Project No. 7545 – L.M.I.

Drawing Title

VERTICAL DETAILS
7545 SERIES
CURTAINWALL L.M.I.

Sheet No. 9/61

mparolusic – 26/Oct/11 9:26 AM

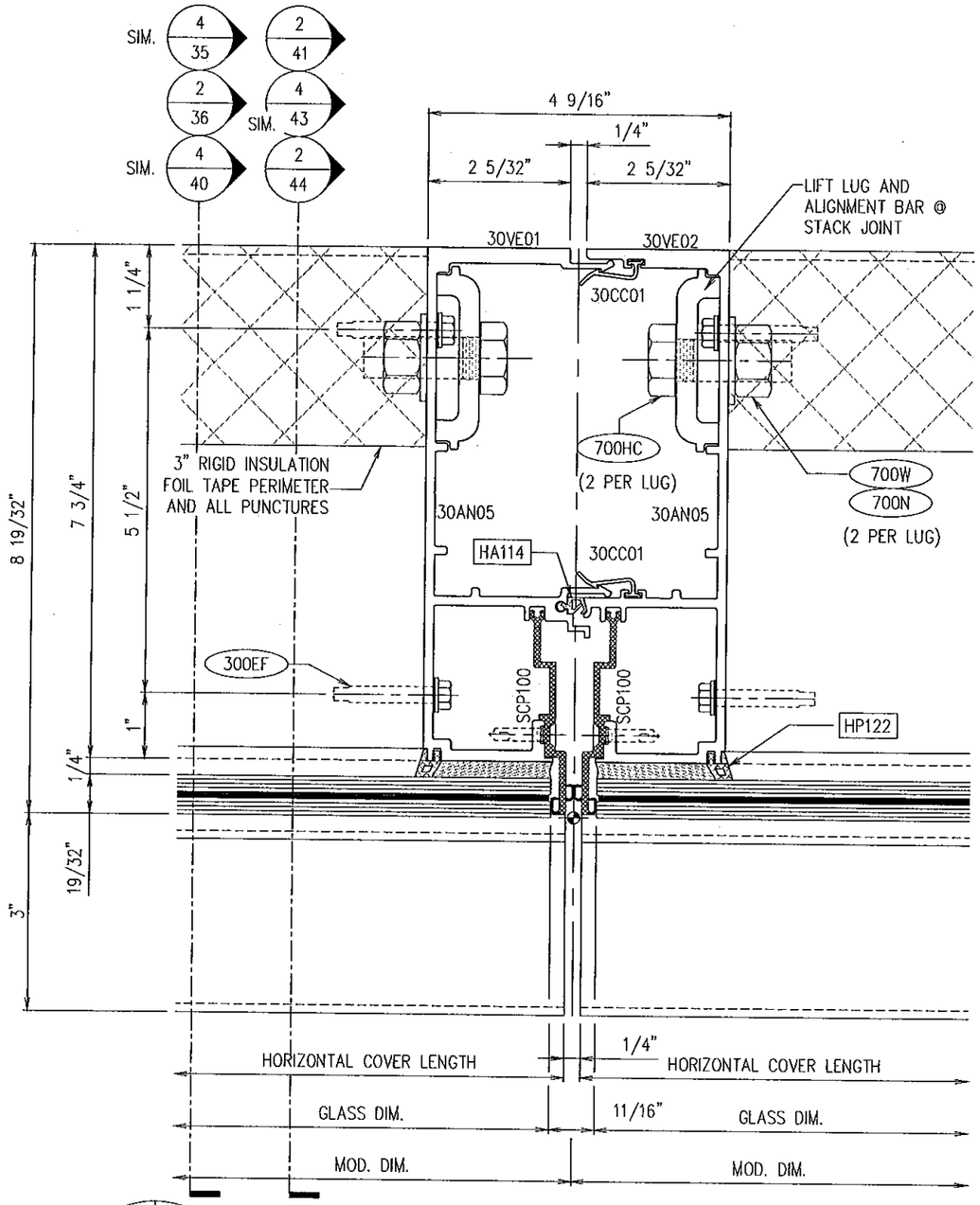

1 – 10 VERTICAL @ SPANDREL W/O COVERS

Scale: FULL

NOTE:

SEE DETAIL 1 ON SHEET 9 FOR TYPICAL NOTES AND INFORMATION

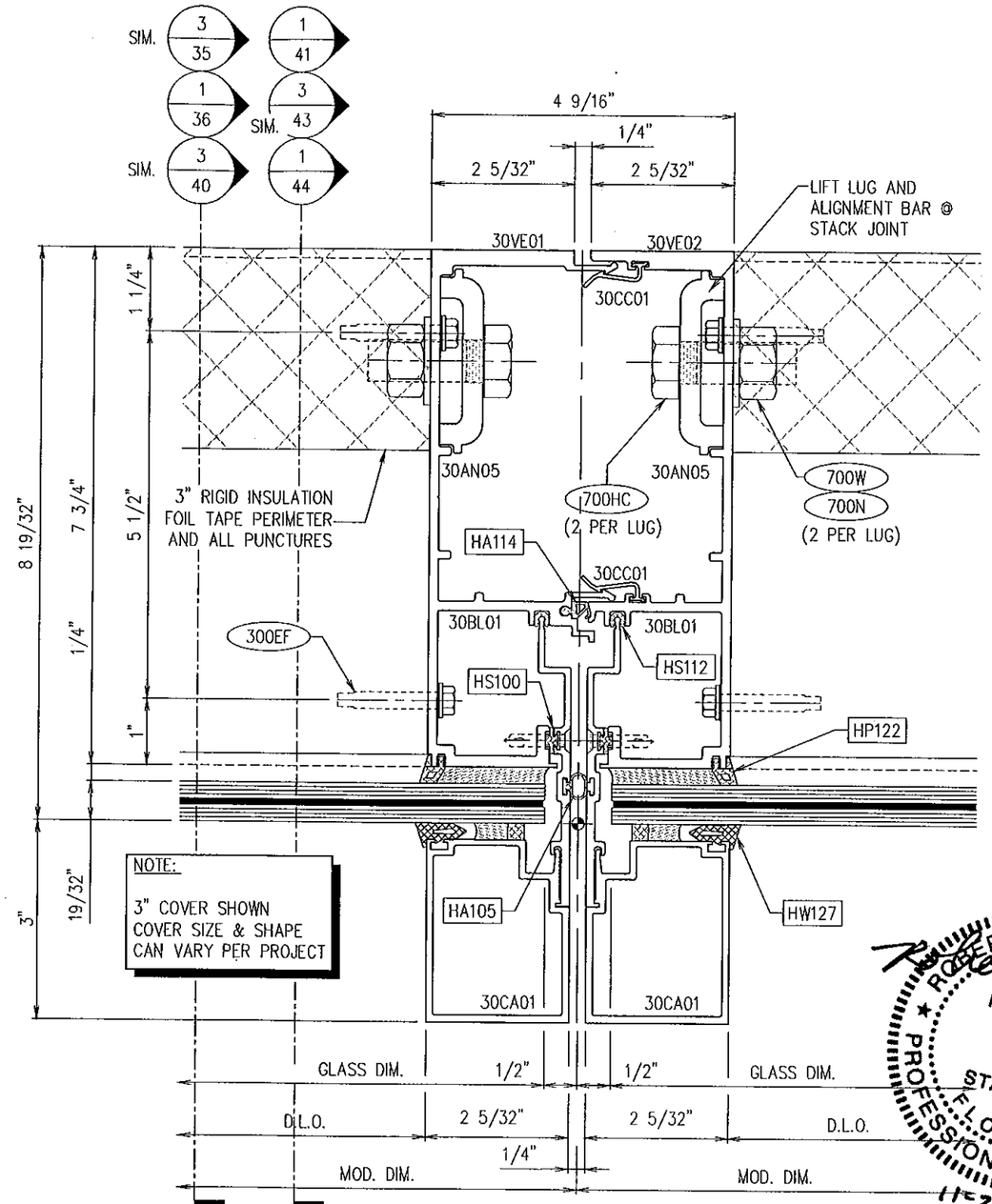

NOTE:

3" COVER SHOWN
COVER SIZE & SHAPE
CAN VARY PER PROJECT

2 – 10 – VERTICAL @ SPANDREL W/ COVERS

Scale: FULL

NOTE:

SEE DETAIL 2 ON SHEET 9 FOR TYPICAL NOTES AND INFORMATION

Approved as complying with the Florida Building Code
Date DEC. 22, 2011
NOA# 11-0125.01
Miami Dade Product Control
By Manuel Perez

enclos corp
2770 Blue Water Rd.
Eagan, MN 55121
Tel. 651-796-6100
Fax 651-994-6360

Sub No.	Rev. No.	Date	Drawn By	Submittal/Revision Description
1	–	24 SEP 10	MGD	1ST SUBMITTAL

ROBERT D. McCAULEY
PE 68037
ENCLOS CORP
2770 BLUE WATER RD.
EAGAN, MN 55121
COA 28468

Reviewed for Structural Integrity Only

ROBERT D. McCAULEY No 68037 STATE OF FLORIDA PROFESSIONAL ENGINEER

Date 24 SEP 10

Scale FULL

Project No. 7545 – L.M.I.

Drawing Title

VERTICAL DETAILS
7545 SERIES
CURTAINWALL L.M.I.

Sheet No. 10/61

mporatusic – 26/Oct/11 9:25 AM

NOTE:

INTERMEDIATE VERTICAL MULLION CONNECTION TO OCCUR IN VISION GLASS AND IN SPANDREL GLASS WITHOUT AN ANCHOR ATTACHED TO THE INTERMEDIATE VERTICAL.

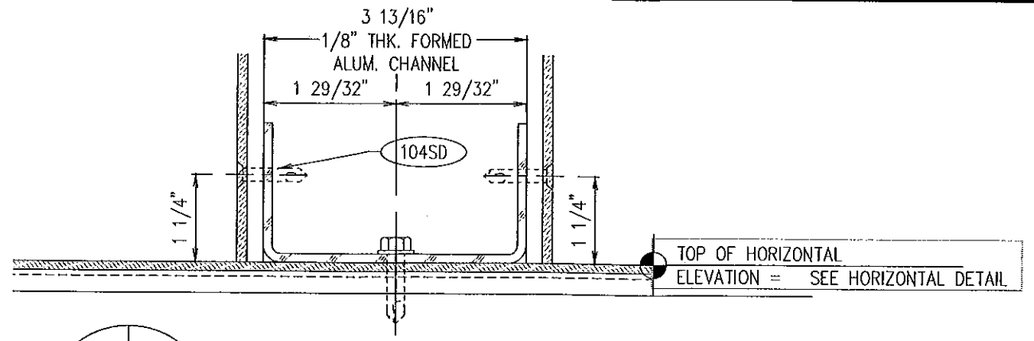

3 / 11 — SECTION THRU INTERMEDIATE MULLION

Scale: FULL

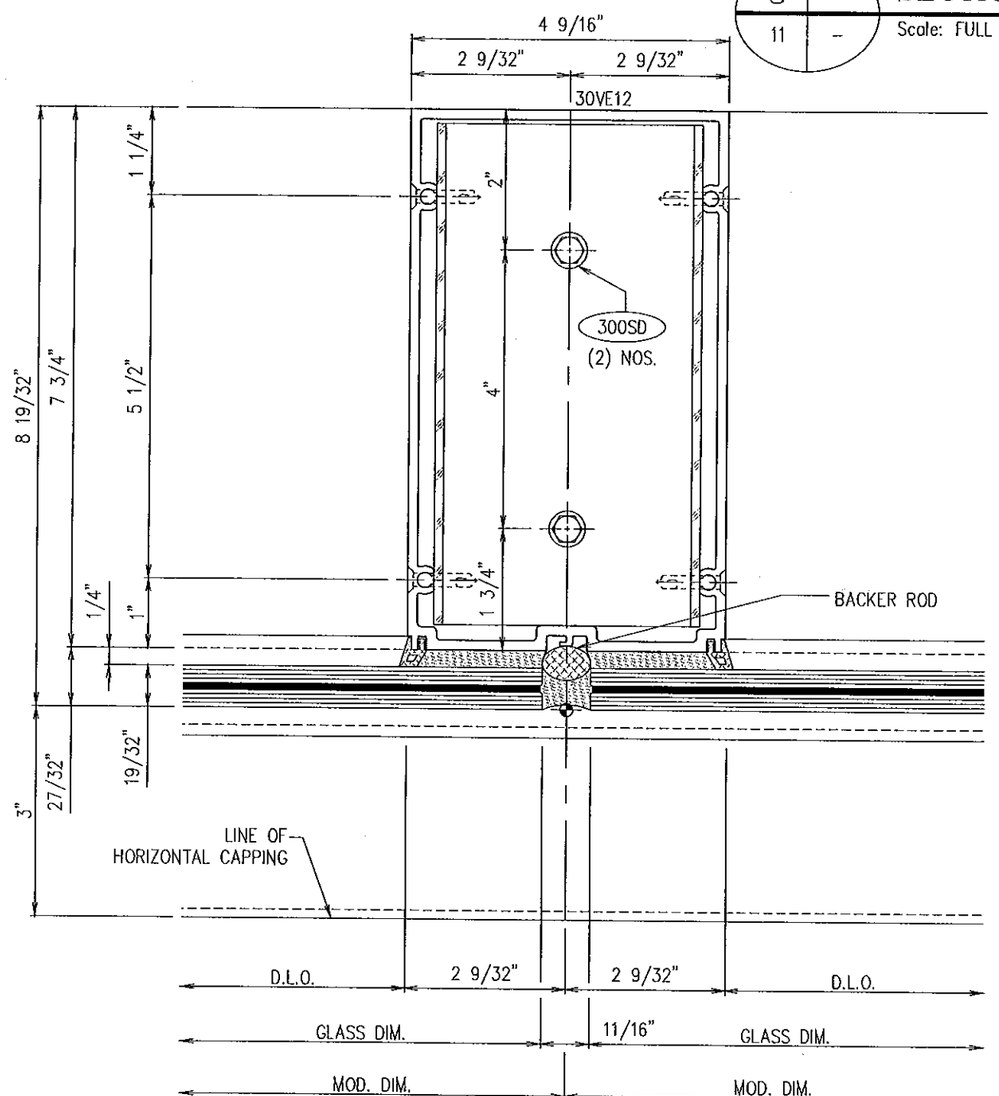

1 / 11 — INTERMEDIATE MULLION @ VISION

Scale: FULL W/O COVERS

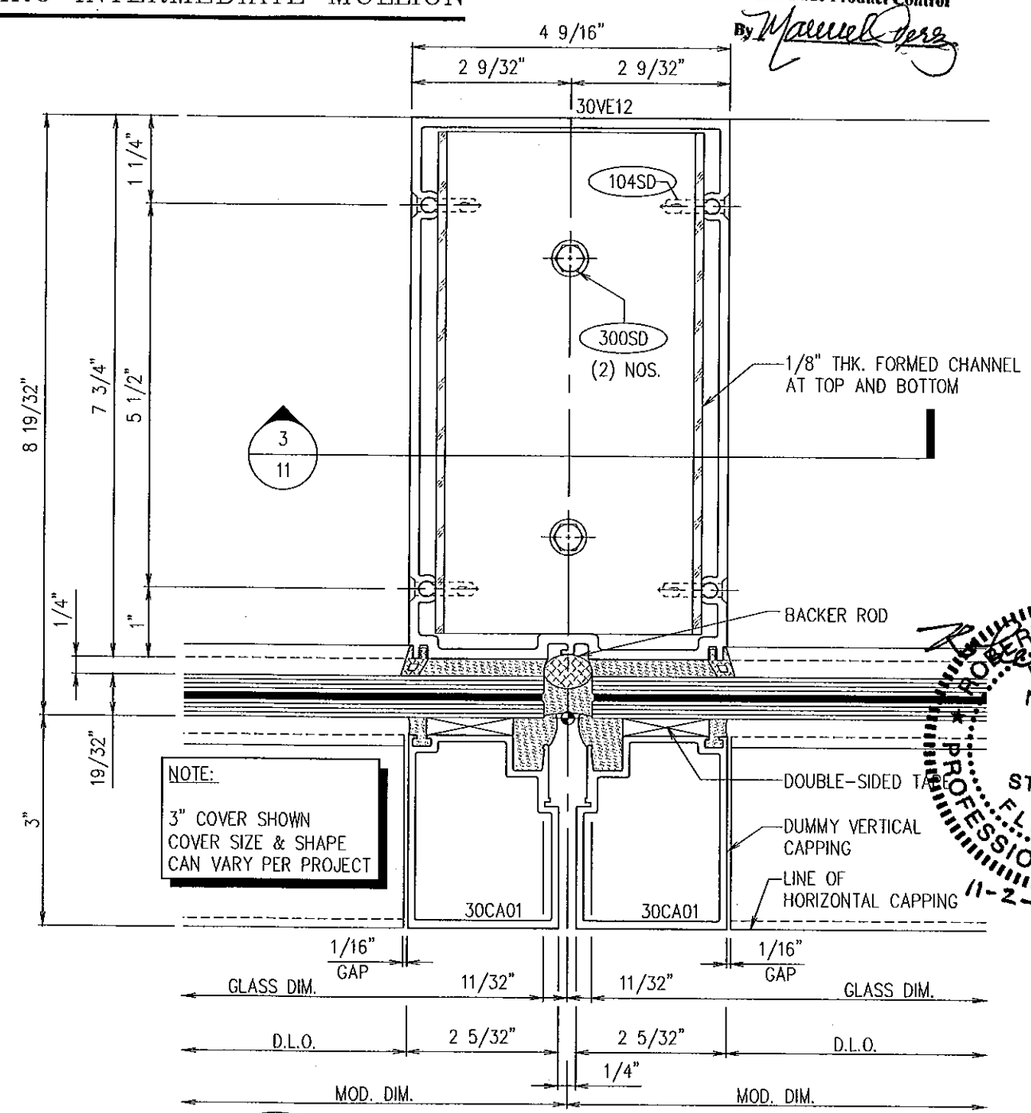

NOTE:

3" COVER SHOWN
COVER SIZE & SHAPE
CAN VARY PER PROJECT

2 / 11 — INTERMEDIATE MULL. @ VISION

Scale: FULL W/ VERTICAL DUMMY COVER

Approved as complying with the Florida Building Code
Date DEC. 22, 2011
NOA# 11-0125.01
Miami Dade Product Control
By Manuel Perez

enclos corp
2770 Blue Water Rd.
Eagan, MN 55121
Tel. 651-796-6100
Fax 651-994-6360

No.	Sub. No.	Rev.	Date	Drawn By	Description
	1	–	24 SEP 10	MGD	1ST SUBMITTAL

ROBERT D. McCAULEY
PE 68037
ENCLOS CORP
2770 BLUE WATER RD.
EAGAN, MN 55121
COA 28468

Reviewed for Structural Integrity Only

ROBERT D. McCAULEY LICENSED No 68037 STATE OF FLORIDA PROFESSIONAL ENGINEER 11-2-11

Date	Scale
09 SEP 10	FULL

Project No.
7545 – L.M.I.

Drawing Title

VERTICAL DETAILS
7545 SERIES
CURTAINWALL L.M.I.

Sheet No.
11/61

mparatusic – 18/Aug/11 9:51 AM

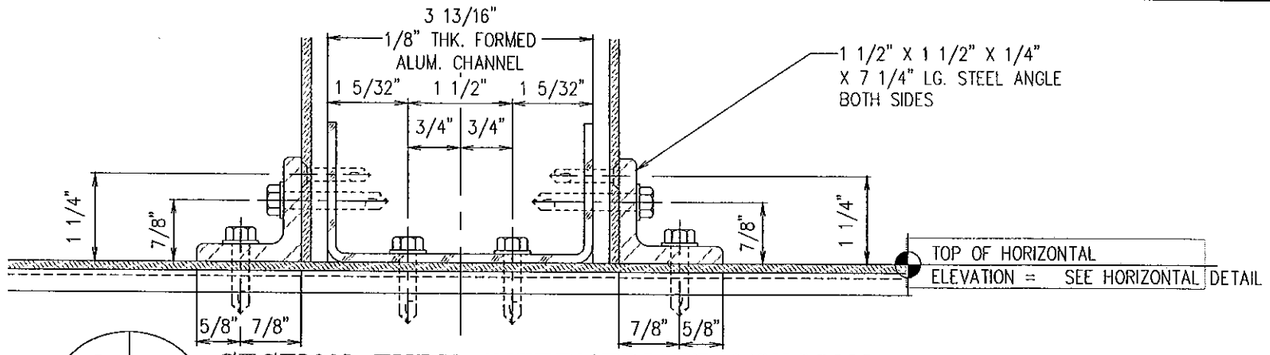

3 | –
12 | –

SECTION THRU INTERMEDIATE MULLION

Scale: FULL (AT ANCHOR LOCATION)

NOTE:

INTERMEDIATE VERTICAL MULLION CONNECTION TO OCCUR IN SPANDREL GLASS WHEN AN ANCHOR IS ATTACHED TO INTERMEDIATE VERTICAL MULLION.

Approved as complying with the Florida Building Code
Date DEC. 22, 2011
NOA# 11-0125.01
Miami Dade Product Control
By [signature]

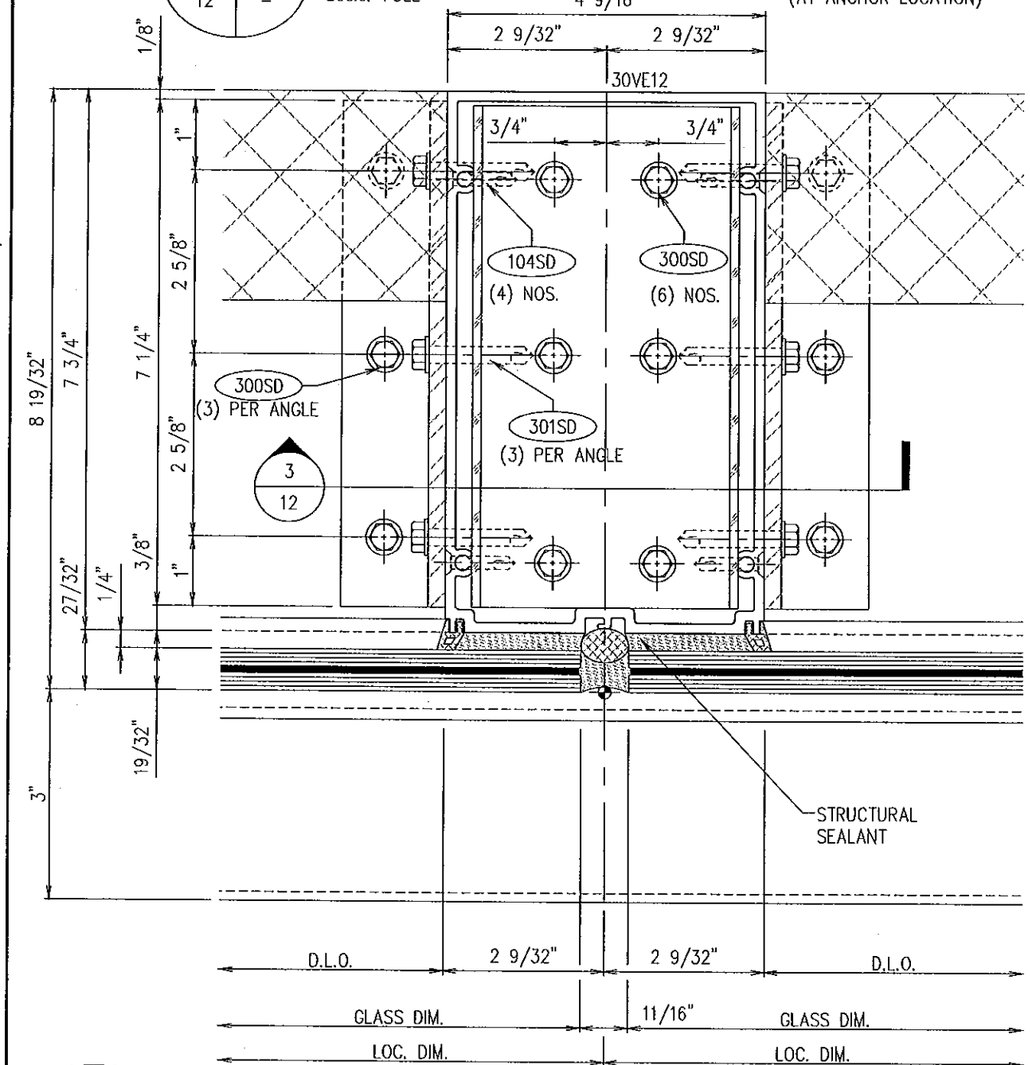

1 | –
12 | –

INTM. MULLION @ SPANDREL W/O COVERS

Scale: FULL

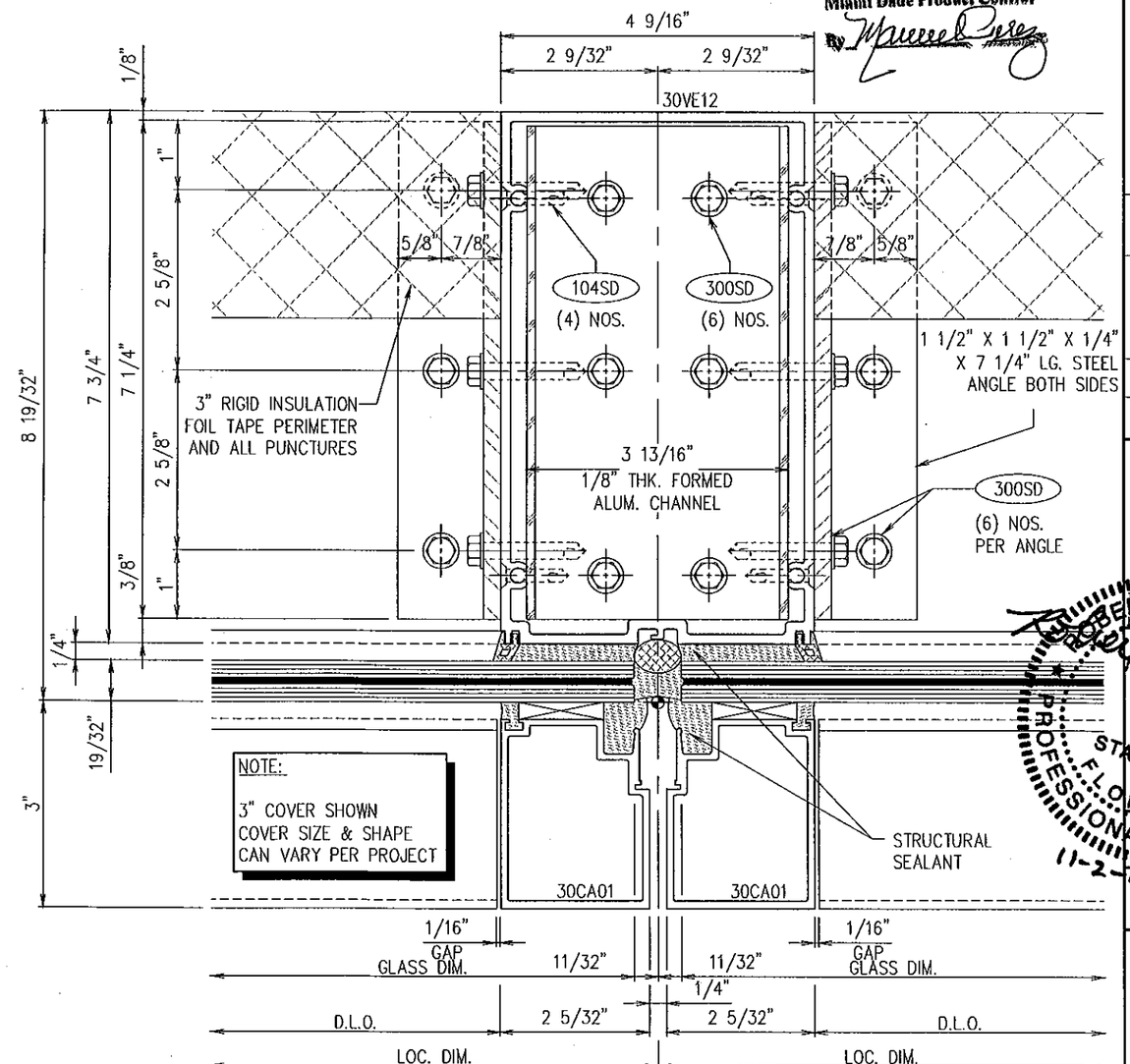

2 | –
12 | –

INTM. MULLION @ SPANDREL W/ VERT. DUMMY COVER

Scale: FULL

enclos corp
2770 Blue Water Rd.
Eagan, MN 55121
Tel. 651-796-6100
Fax 651-994-6360

Sub. No.	Rev. No.	Date	Drawn By	Submittal/Revision Description
1	–	24 SEP 10	MGD	1ST SUBMITTAL

ROBERT D. McCAULEY
PE 68037
ENCLOS CORP
2770 BLUE WATER RD.
EAGAN, MN 55121
COA 28468

Reviewed For Structural Integrity Only

ROBERT D. McCAULEY
LICENSE
No 68037
STATE OF FLORIDA
PROFESSIONAL ENGINEER
11-2-11

Date 05 APR 11
Scale FULL

Project No.
7545 – L.M.I.

Drawing Title

VERTICAL DETAILS
7545 SERIES
CURTAINWALL L.M.I.

Sheet No.
12/61

mporatusic – 18/Aug/11 9:53 AM

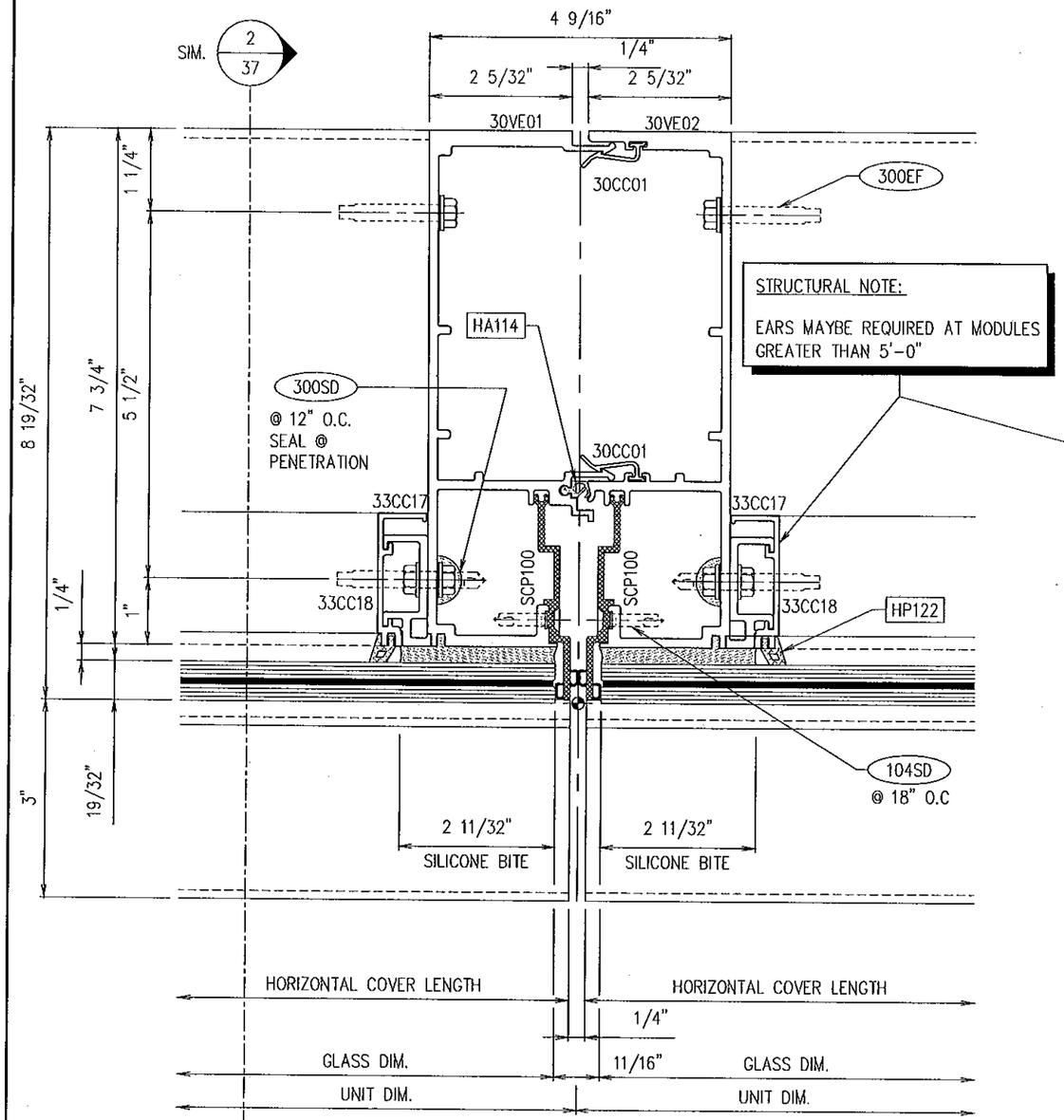

STRUCTURAL NOTE:

EARS MAYBE REQUIRED AT MODULES GREATER THAN 5'-0"

1 – VERTICAL @ VISION W/O COVERS
13 –
Scale: FULL
FOR HIGH WIND ZONE

NOTE:

SEE DETAIL 1 ON SHEET 9 FOR TYPICAL NOTES AND INFORMATION

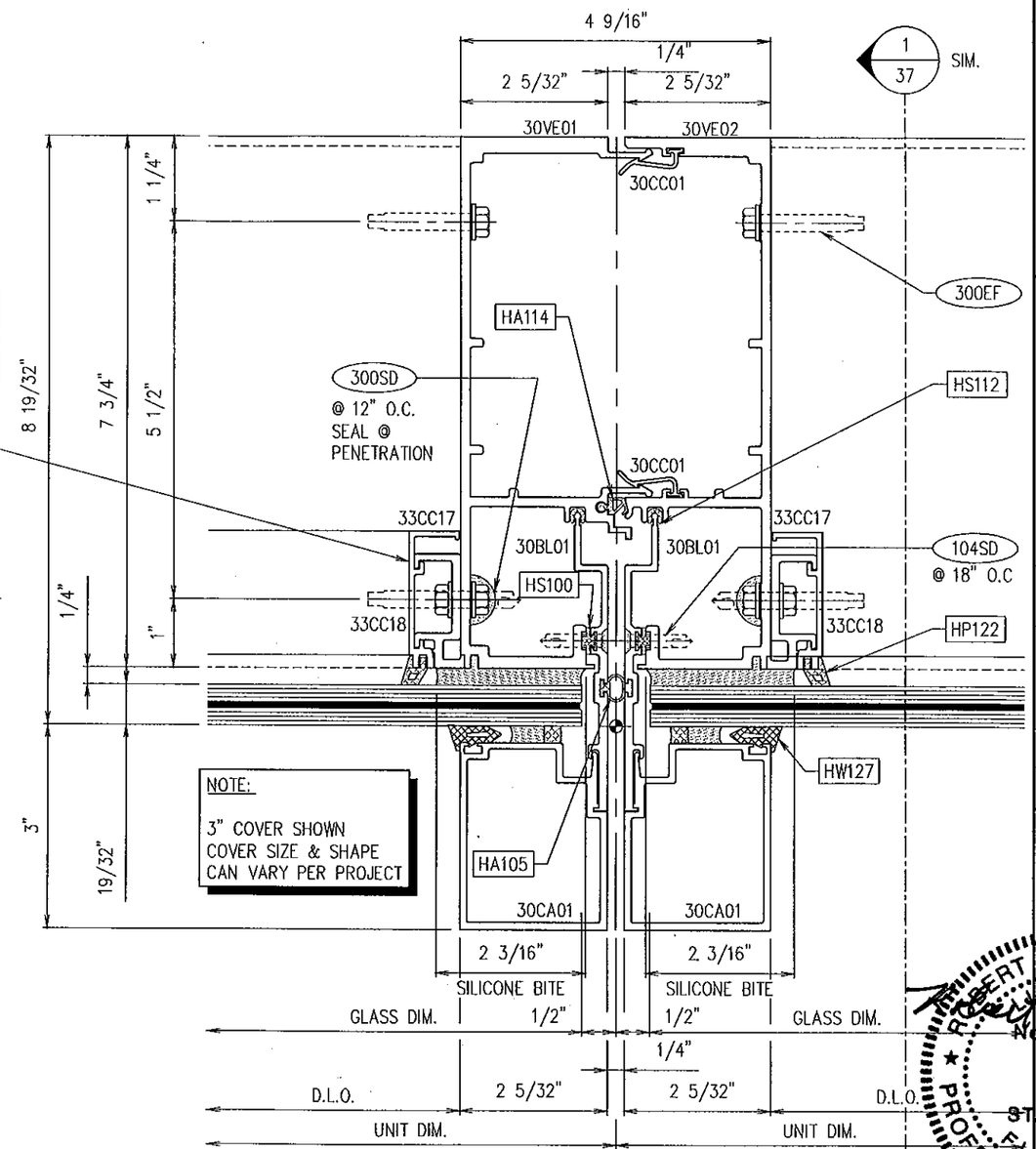

NOTE:

3" COVER SHOWN
COVER SIZE & SHAPE
CAN VARY PER PROJECT

2 – VERTICAL @ VISION W/ COVERS
13 –
Scale: FULL
FOR HIGH WIND ZONE

NOTE:

SEE DETAIL 2 ON SHEET 9 FOR TYPICAL NOTES AND INFORMATION

Approved as complying with the Florida Building Code
Date DEC. 22, 2011
NOA# 11-0125.01
Miami Dade Product Control
By Manuel Perez

NOTE:

CC17 & CC18 ALONG WITH THE ADDED SEALANT BITE ARE FOR HIGH WIND ZONE AREAS AND WILL BE REQUIRED ON A PER JOB BASIS.

enclos corp
2770 Blue Water Rd.
Eagan, MN 55121
Tel. 651-796-6100
Fax 651-994-6360

Sub. No.	Rev. No.	Date	Drawn By	Submittal/Revision Description
1	–	24 SEP 10	MGD	1ST SUBMITTAL

ROBERT D. McCAULEY
PE 68037
ENCLOS CORP
2770 BLUE WATER RD.
EAGAN, MN 55121
CoA: 28468

Reviewed for Structural Integrity Only

ROBERT D. McCAULEY
No. 68037
STATE OF FLORIDA
PROFESSIONAL ENGINEER
11-2-11

Date: 07 APR 10
Scale: FULL

Project No.
7545 – L.M.I.

Drawing Title

VERTICAL DETAILS
7545 SERIES
CURTAINWALL L.M.I.

Sheet No.
13/61

mporalusic – 26/Oct/11 9:25 AM

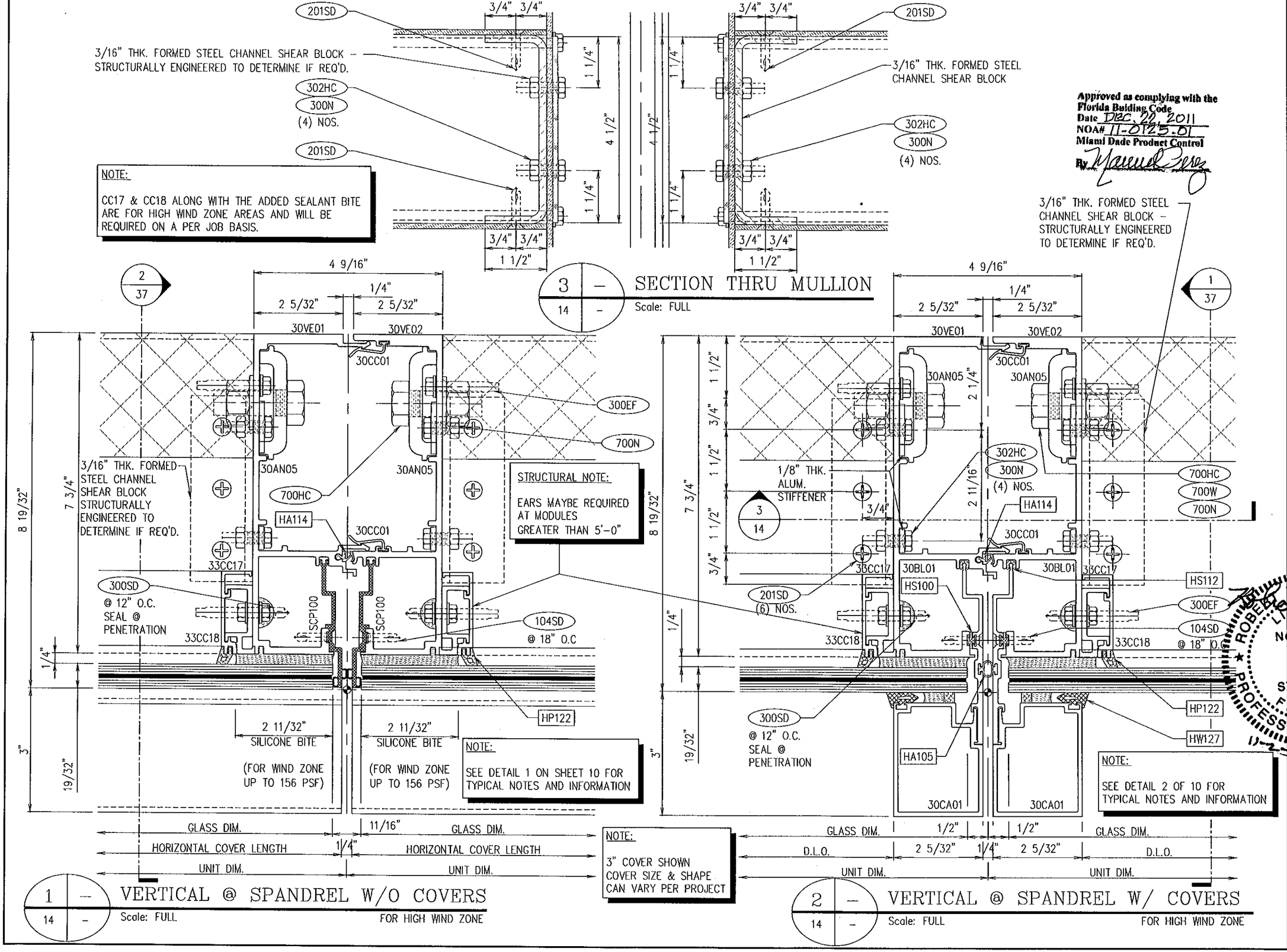

Approved as complying with the Florida Building Code
Date DEC. 22, 2011
NOA# 11-0125.01
Miami Dade Product Control
By Manuel Perez

enclos corp
2770 Blue Water Rd.
Eagan, MN 55121
Tel. 651-796-6100
Fax 651-994-6360

Sub No.	Rev. No.	Date	Drawn By	Submittal/Revision Description
1	-	24 SEP 10	MGD	1ST SUBMITTAL

ROBERT D. McCAULEY
PE 68037
ENCLOS CORP
2770 BLUE WATER RD.
EAGAN, MN 55121
COA 28468

Reviewed For Structural Integrity Only

ROBERT D. McCAULEY LICENSED No 68037 STATE OF FLORIDA PROFESSIONAL ENGINEER

Date 01 APR 10
Scale FULL

Project No.
7545 - L.M.I.

Drawing Title
VERTICAL DETAILS
7545 SERIES
CURTAINWALL L.M.I.

Sheet No.
14/61

mporatusic - 26/Oct/11 9:27 AM

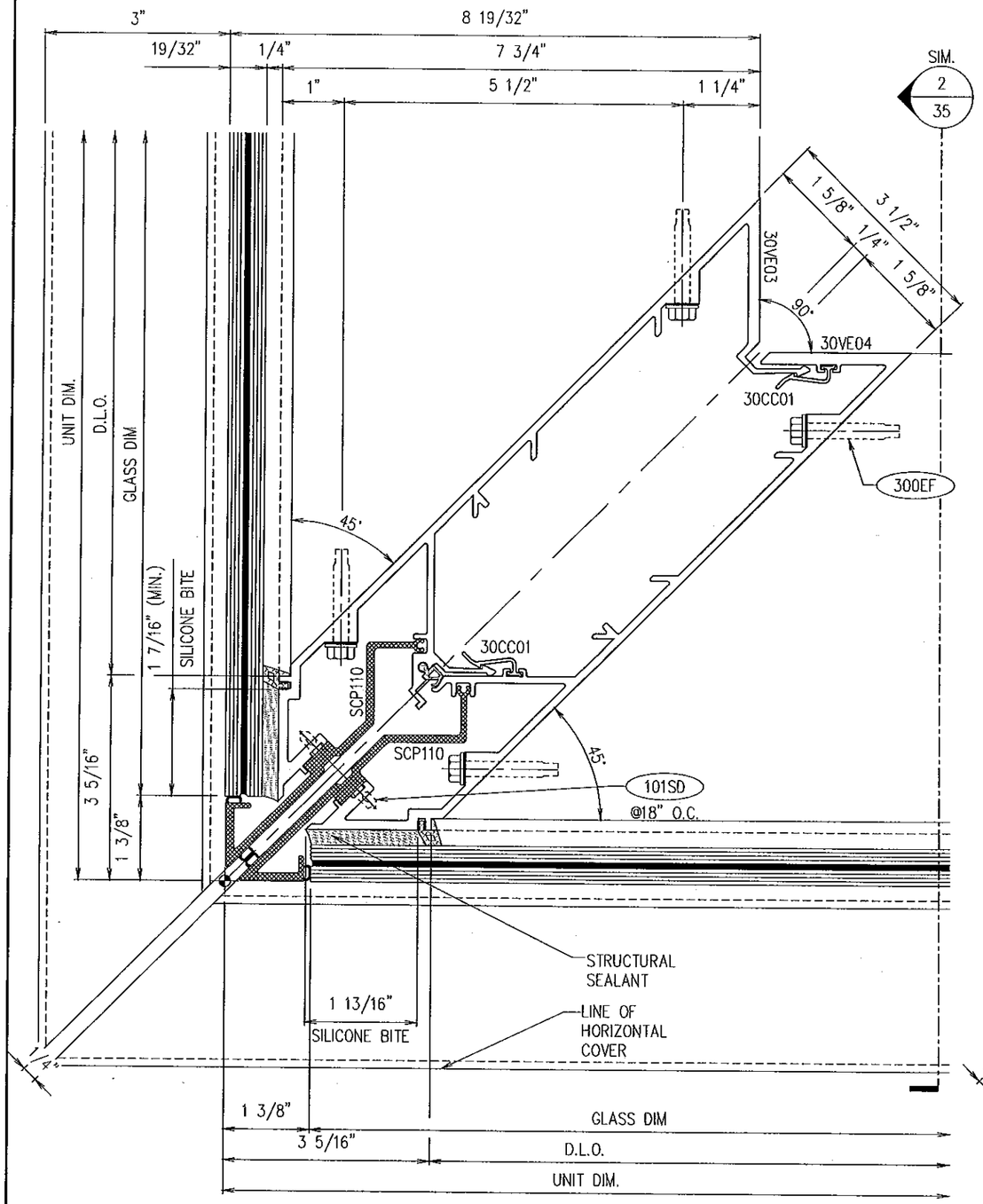

1 | – | 15 | –

90° OUTSIDE CORNER @ VISION W/O COVERS

Scale: FULL

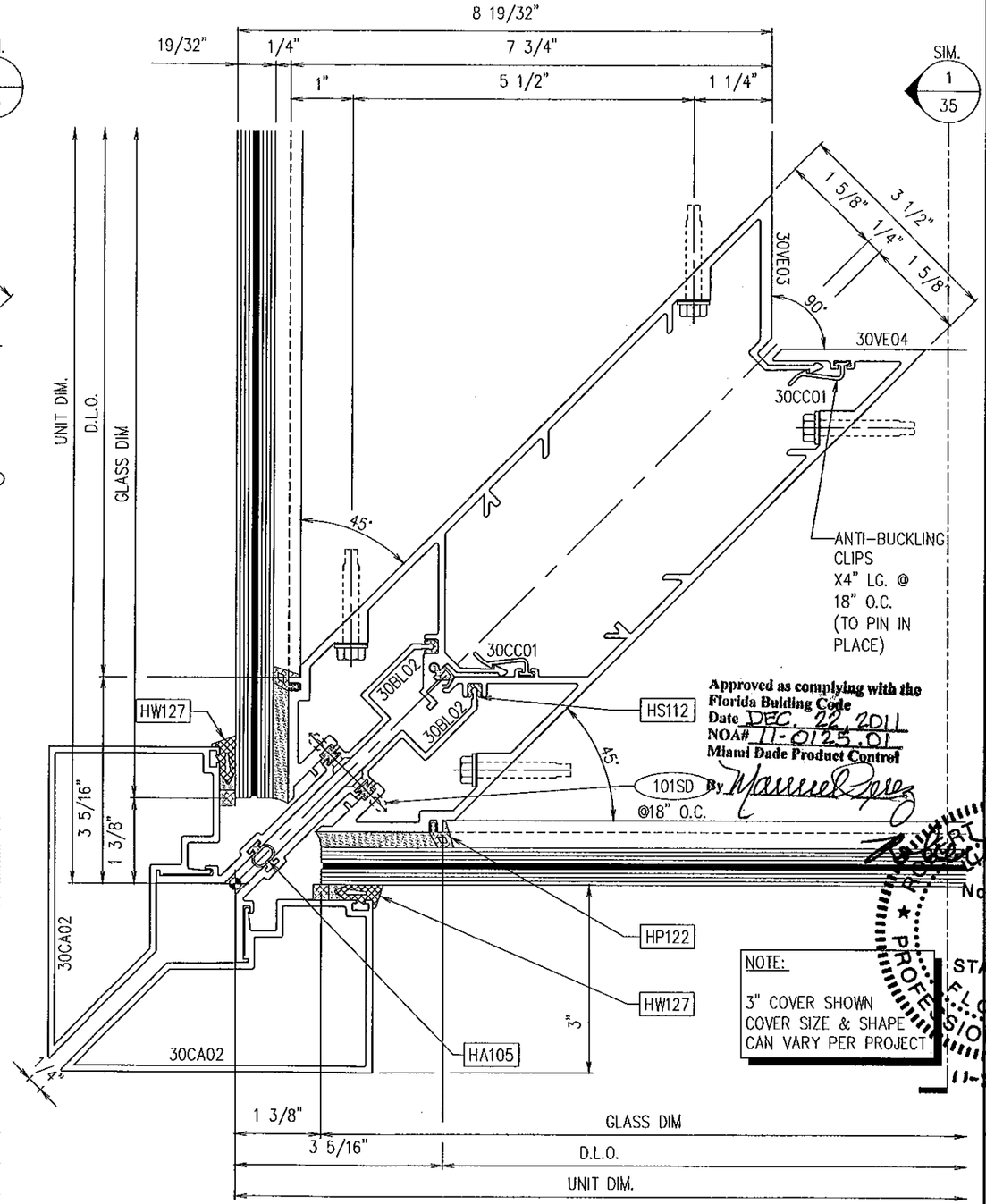

Approved as complying with the Florida Building Code
Date DEC. 22, 2011
NOA# 11-0125.01
Miami Dade Product Control
By Manuel Perez

NOTE:
3" COVER SHOWN
COVER SIZE & SHAPE CAN VARY PER PROJECT

2 | – | 15 | –

90° OUTSIDE CORNER @ VISION W/ COVERS

Scale: FULL

enclos corp
2770 Blue Water Rd.
Eagan, MN 55121
Tel. 651-796-6100
Fax 651-994-6360

Sub. No.	Rev. No.	Date	Drawn By	Submittal/Revision Description
1	–	24 SEP 10	MGD	1ST SUBMITTAL

ROBERT D. McCAULEY
PE 68037
ENCLOS CORP
2770 BLUE WATER RD.
EAGAN, MN 55121
COA 28468

Reviewed For Structural Integrity Only

ROBERT D. McCAULEY
No 68037
STATE OF FLORIDA
PROFESSIONAL ENGINEER
11-2-11

Date	Scale
08 APR 10	FULL

Project No.
7545 – L.M.I.

Drawing Title

VERTICAL DETAILS
7545 SERIES
CURTAINWALL L.M.I.

Sheet No.
15/61

mporatusic – 26/Oct/11 9:28 AM

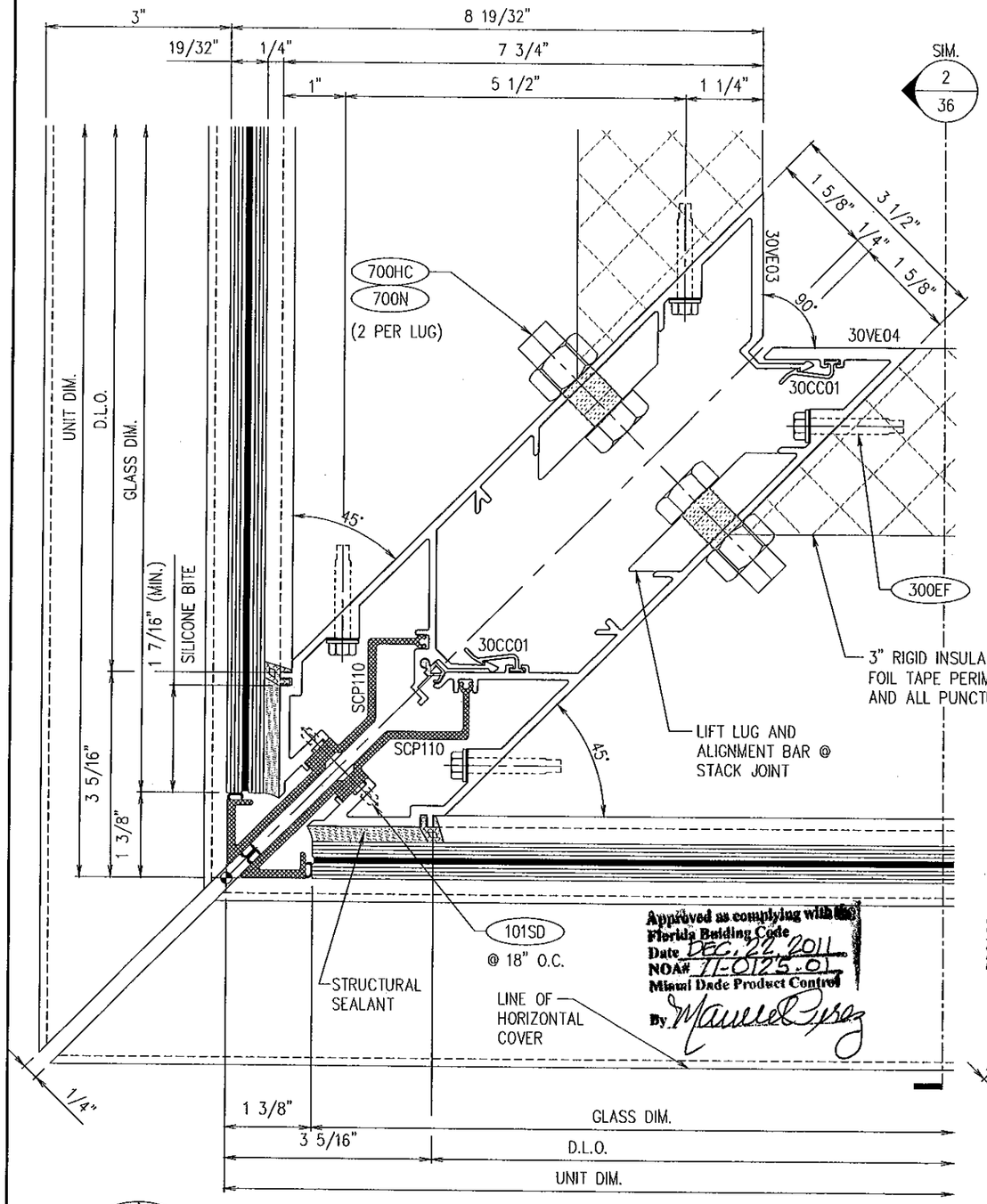

Approved as complying with the Florida Building Code
Date DEC. 22, 2011
NOA# 11-0125.01
Miami Dade Product Control
By Manuel Perez

1 | – | 16 | –

90° OUTSIDE CORNER @ SPANDREL W/O COVERS

Scale: FULL

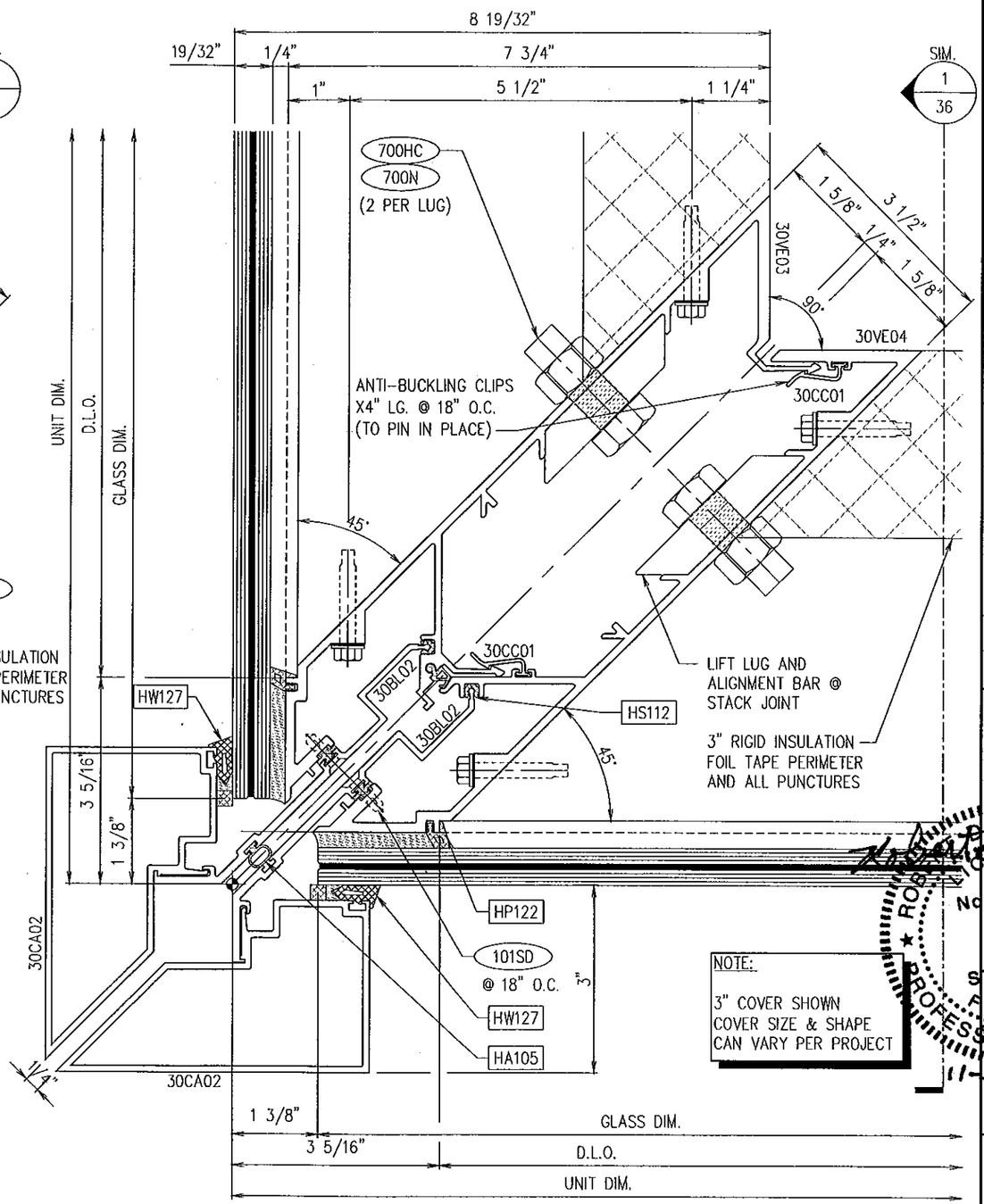

NOTE:
3" COVER SHOWN
COVER SIZE & SHAPE
CAN VARY PER PROJECT

2 | – | 16 | –

90° OUTSIDE CORNER @ SPANDREL W/ COVERS

Scale: FULL

enclos corp
2770 Blue Water Rd.
Eagan, MN 55121
Tel. 651-796-6100
Fax 651-994-6360

Sub No.	Rev. No.	Date	Drawn By	Submittal/Revision Description
1	–	24 SEP 10	MGD	1ST SUBMITTAL

ROBERT D. McCAULEY
PE 68037
ENCLOS CORP
2770 BLUE WATER RD.
EAGAN, MN 55121
COA 28468

Reviewed for Structural Integrity Only

ROBERT D. McCAULEY
No 68037
STATE OF FLORIDA
PROFESSIONAL ENGINEER
11-2-11

Date 06 APR 10 | Scale FULL

Project No.
7545 – L.M.I.

Drawing Title

VERTICAL DETAILS
7545 SERIES
CURTAINWALL L.M.I.

Sheet No.
16/61

mparalusic – 26/Oct/11 9:29 AM

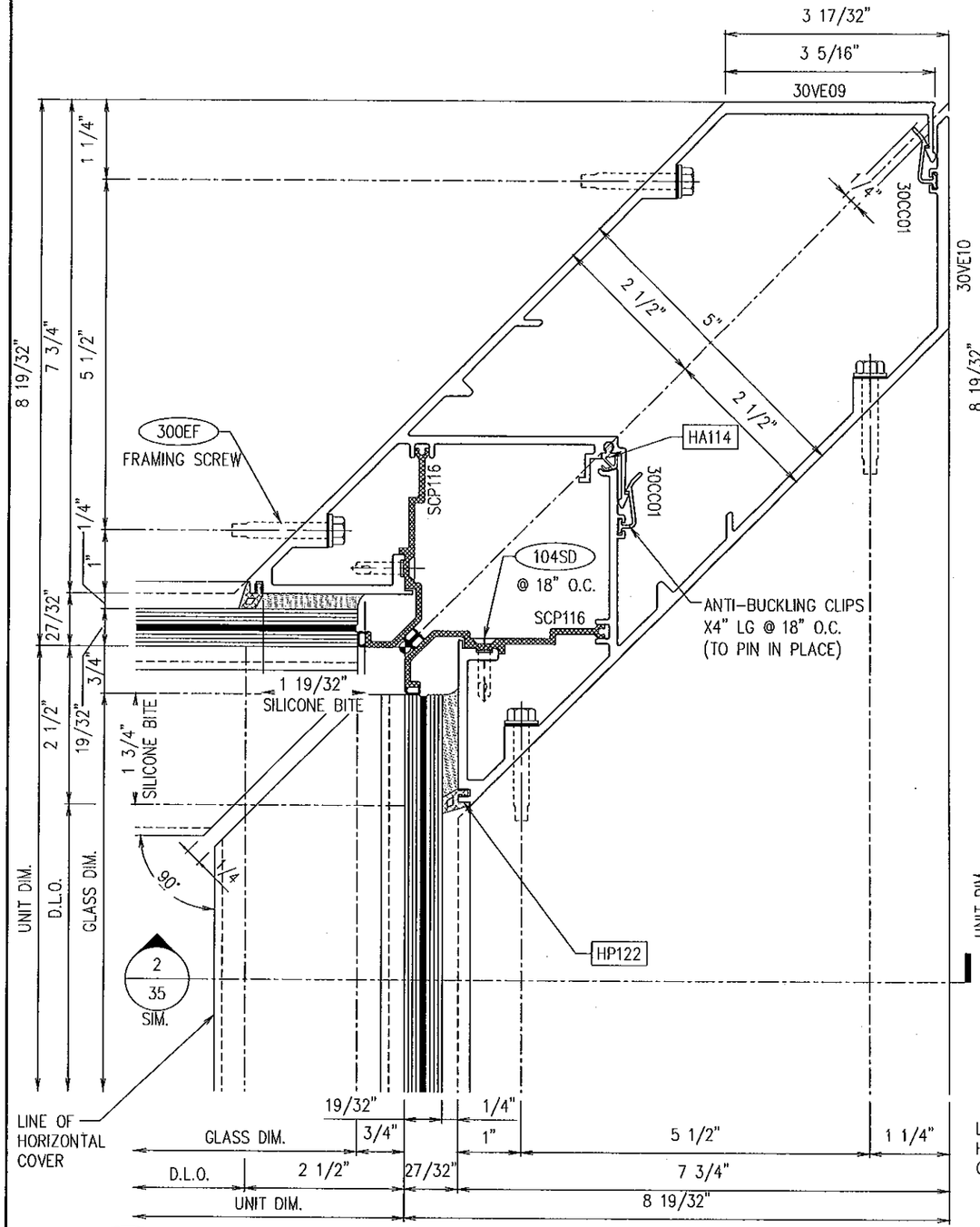

1 – 17 – 90° INSIDE CORNER @ VISION W/O COVERS

Scale: FULL

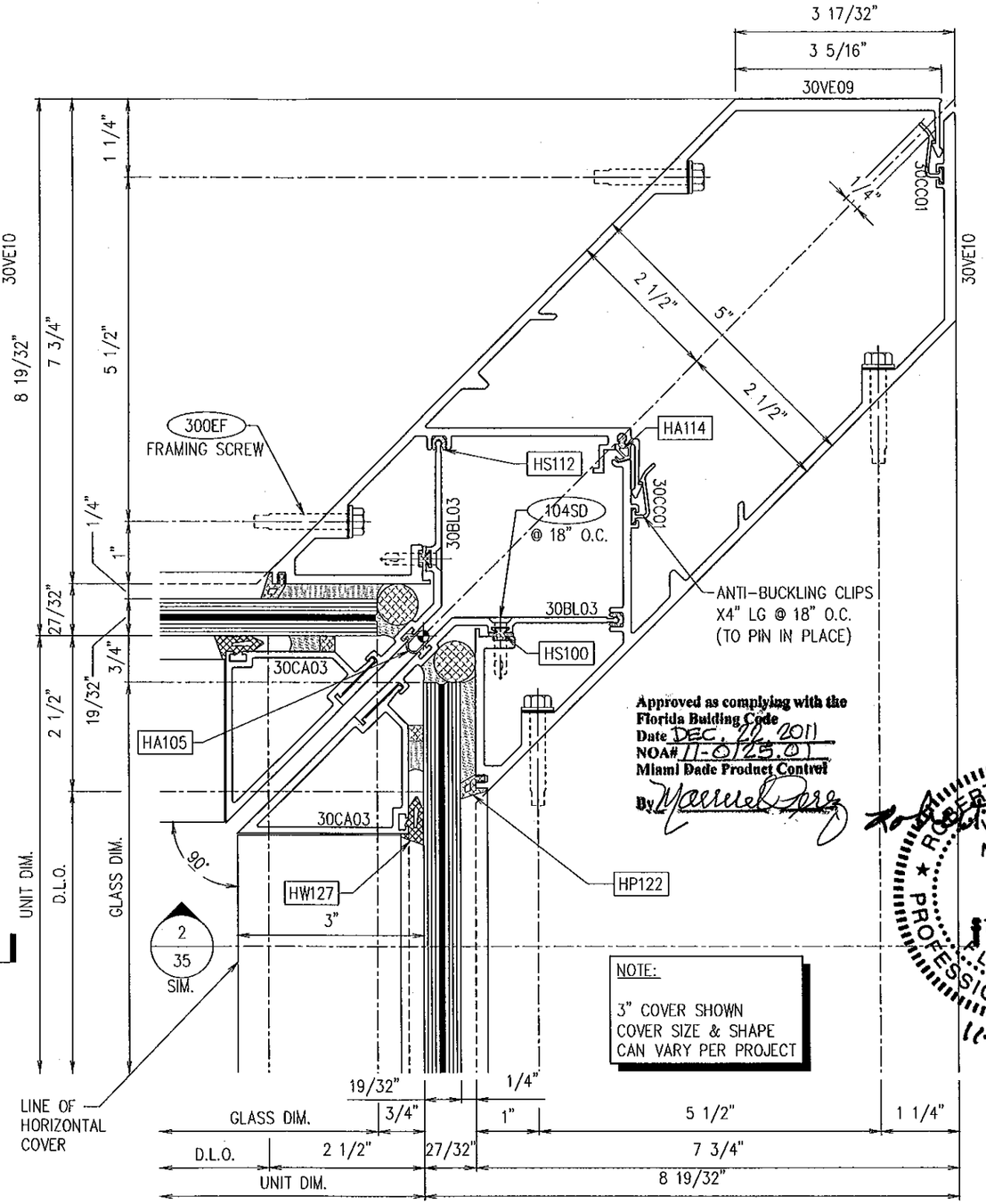

Approved as complying with the Florida Building Code
Date DEC. 28 2011
NOA# 11-0725.01
Miami Dade Product Control
By Manuel Perez

NOTE:

3" COVER SHOWN
COVER SIZE & SHAPE
CAN VARY PER PROJECT

2 – 17 – 90° INSIDE CORNER @ VISION W/ COVERS

Scale: FULL

enclos corp
2770 Blue Water Rd.
Eagan, MN 55121
Tel. 651-796-6100
Fax 651-994-6360

No.	Sub.	Rev.	Date	By	Description
	1	–	24 SEP 10	MGD	1ST SUBMITTAL

ROBERT D. McCAULEY
PE 68037
ENCLOS CORP
2770 BLUE WATER RD.
EAGAN, MN 55121
COA 28468

Reviewed for Structural Integrity Only

ROBERT D. McCAULEY
No 68037
STATE OF FLORIDA
PROFESSIONAL ENGINEER

11-2-11

Date 26 OCT 10

Scale FULL

Project No. 7545 – L.M.I.

Drawing Title

VERTICAL DETAILS
7545 SERIES
CURTAINWALL L.M.I.

Sheet No. 17/61

mporatusic – 26/Oct/11 9:36 AM

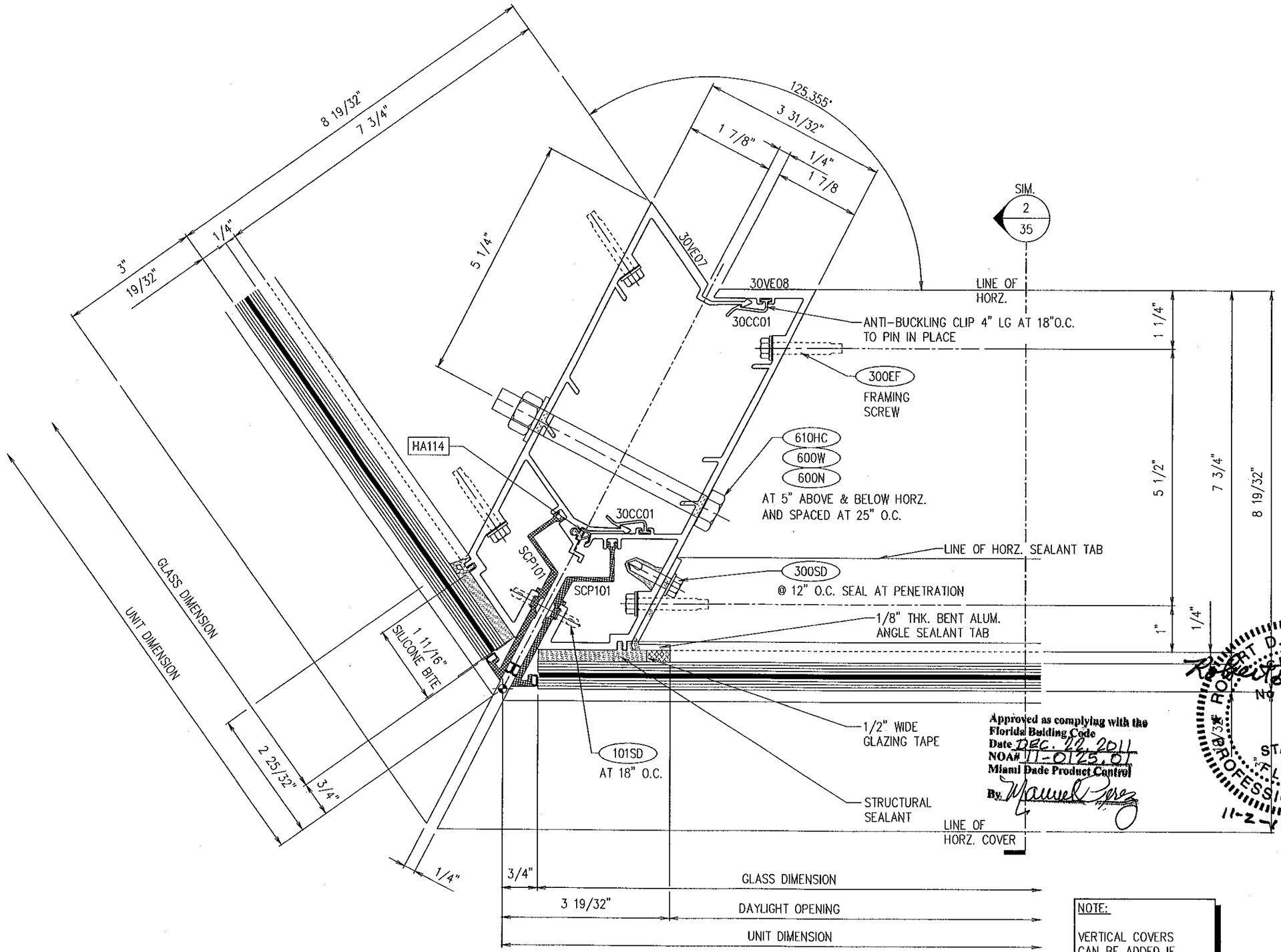

Approved as complying with the Florida Building Code
Date DEC. 22, 2011
NOA# 11-0125.01
Miami Dade Product Control
By Manuel Perez

ROBERT D. McCAULEY
PE 68037
ENCLOS CORP
2770 BLUE WATER RD.
EAGAN, MN 55121
COA 28468

Reviewed for Structural Integrity Only

ROBERT D. McCAULEY
No. 68037
STATE OF FLORIDA
PROFESSIONAL ENGINEER
11-2-11

NOTE:

VERTICAL COVERS CAN BE ADDED IF REQUIRED FOR PROJECT

1 / 18

125.355° OUTSIDE CORNER @ VISION

Scale: FULL SIZE

enclos corp
2770 Blue Water Rd.
Eagan, MN 55121
Tel. 651-796-6100
Fax 651-994-6360

Sub. No.	Rev. No.	Date	Drawn By	Submittal/Revision Description
1	–	24 SEP 10	REY	1ST SUBMITTAL

Date: 25 MAR 10

Scale: FULL

Project No.: 7545 – L.M.I.

Drawing Title: VERTICAL DETAIL 7545 SERIES CURTAINWALL L.M.I.

Sheet No.: 18/61

mporotusic – 28/Oct/11 9:37 AM

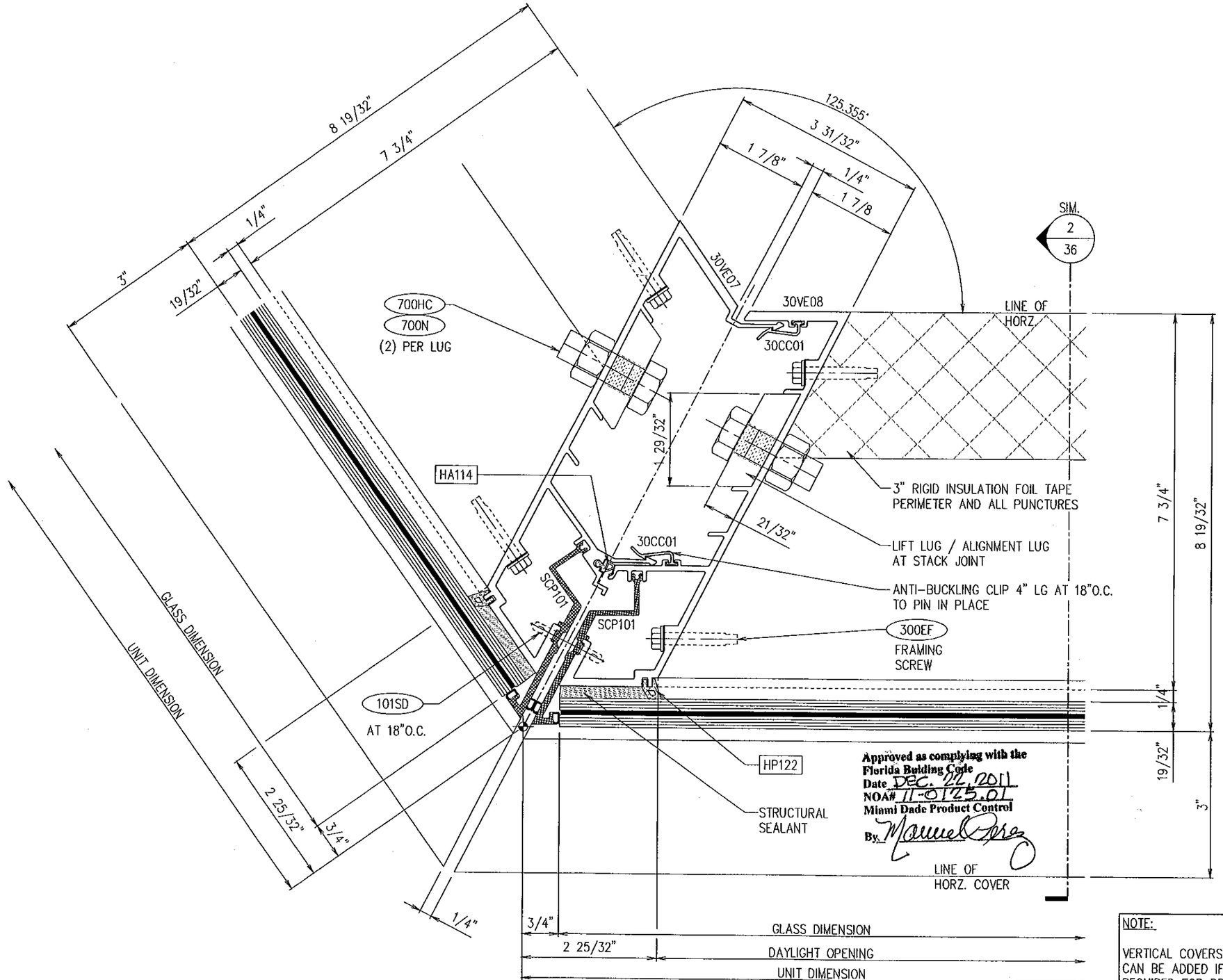

NOTE:

VERTICAL COVERS CAN BE ADDED IF REQUIRED FOR PROJECT

1 / 19

125.355° OUTSIDE CORNER @ SPANDREL

Scale: FULL SIZE

enclos corp
2770 Blue Water Rd.
Eagan, MN 55121
Tel. 651-796-6100
Fax 651-994-6360

Sub. No.	Rev. No.	Date	Drawn By	Submittal/Revision Description
1	-	24 SEP 10	REY	1ST SUBMITTAL

ROBERT D. McCAULEY
PE 68037
ENCLOS CORP
2770 BLUE WATER RD.
EAGAN, MN 55121
COA 28468

Revised for Structural Adequacy Only

ROBERT D. McCAULEY No 68037 STATE OF FLORIDA PROFESSIONAL ENGINEER

11-2-11

Date: 23 MAR 10

Scale: FULL

Project No. 7545 - L.M.I.

Drawing Title

VERTICAL DETAIL
7545 SERIES
CURTAINWALL L.M.I.

Sheet No. 19/61

mparotusic - 26/Oct/11 9:38 AM

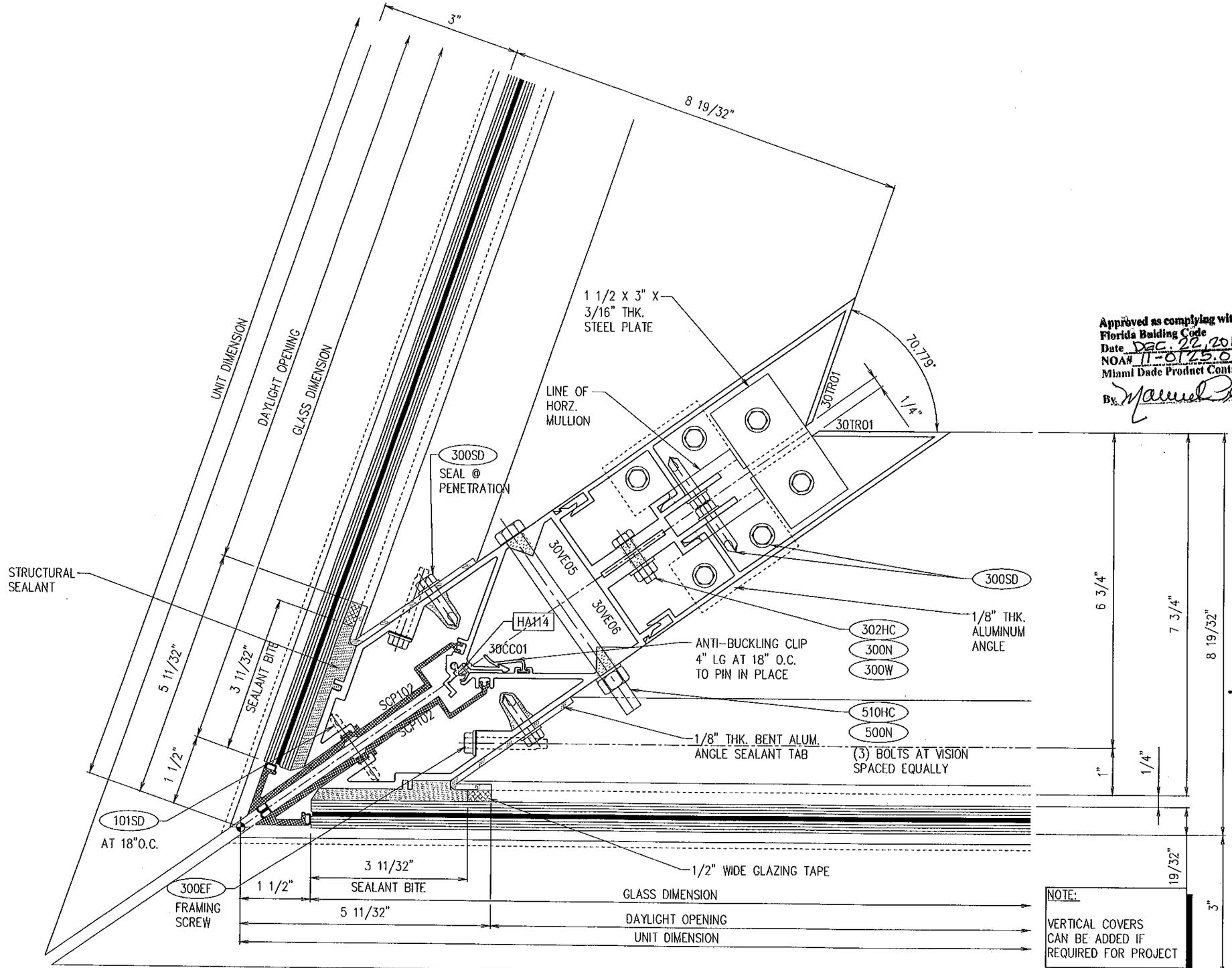

NOTE:

VERTICAL COVERS CAN BE ADDED IF REQUIRED FOR PROJECT

Approved as complying with the Florida Building Code
Date DEC. 22, 2011
NOA# 11-0725.01
Miami Dade Product Control
By Manuel Perez

1 / 20

70.779° OUTSIDE CORNER @ VISION

Scale: FULL SIZE

enclos corp
2770 Blue Water Rd.
Eagan, MN 55121
Tel. 651-796-6100
Fax 651-994-6360

Sub. No.	Rev. No.	Date	Drawn By	Submittal/Revision Description
1	-	24 SEP 10	REY	1ST SUBMITTAL

ROBERT D. McCAULEY
PE 68037
ENCLOS CORP
2770 BLUE WATER RD.
EAGAN, MN 55121
COA 28468

Reviewed for Structural Integrity Only

ROBERT D. McCAULEY No 68037 STATE OF FLORIDA PROFESSIONAL ENGINEER

11-2-11

Date: 24 SEP 10

Scale: FULL

Project No. 7545 - L.M.I.

Drawing Title

VERTICAL DETAILS
7545 SERIES
CURTAINWALL L.M.I.

Sheet No. 20/61

mparolusic - 18/Aug/11 10:10 AM

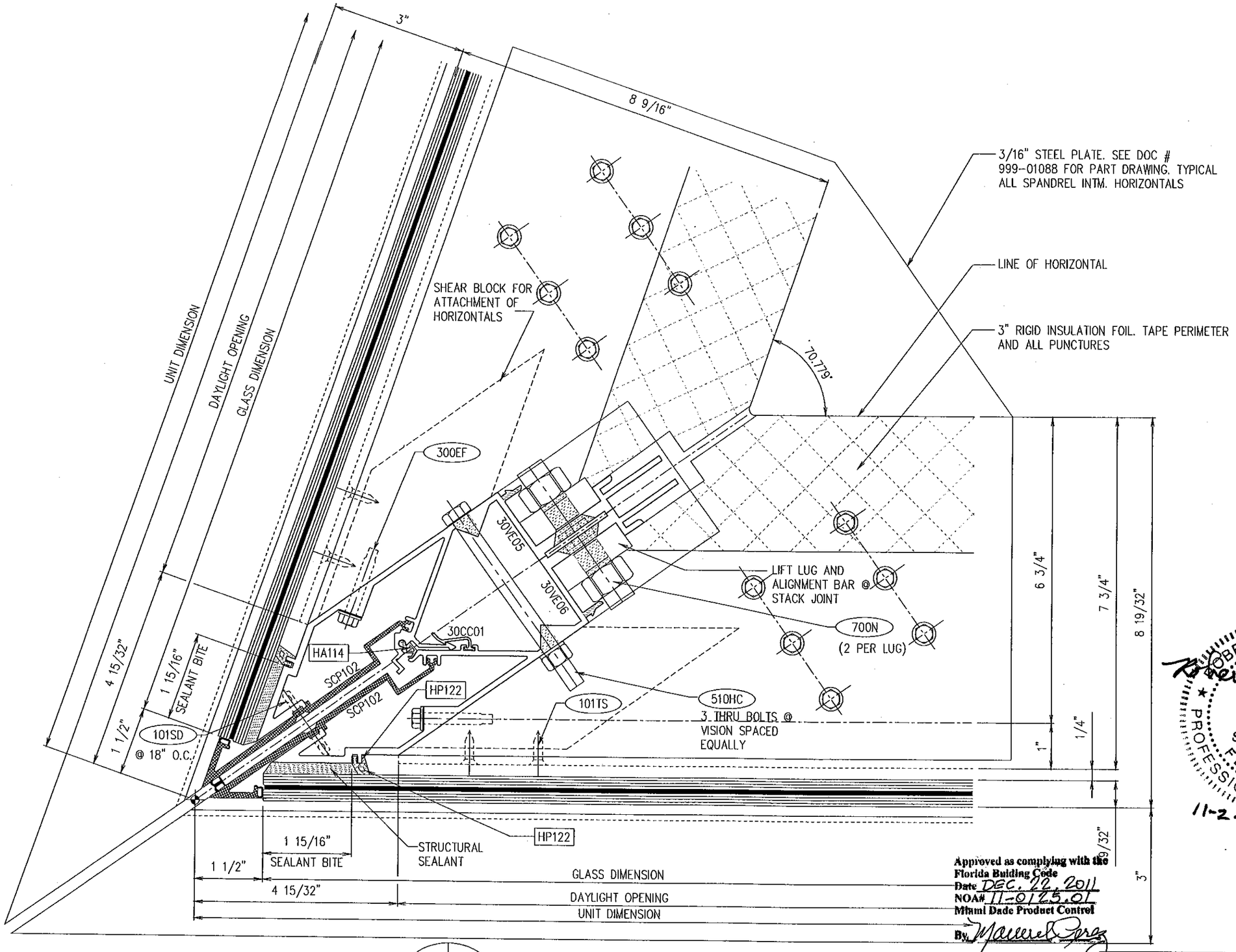

1 / 21 — 70.779° OUTSIDE CORNER @ SPANDREL

Scale: FULL SIZE

Approved as complying with the Florida Building Code
Date DEC. 22, 2011
NOA# 11-0125.01
Miami Dade Product Control
By [signature]

NOTE:
VERTICAL COVERS CAN BE ADDED IF REQUIRED FOR PROJECT

enclos corp
2770 Blue Water Rd.
Eagan, MN 55121
Tel. 651-796-6100
Fax 651-994-6360

Sub. No.	Rev. No.	Date	Drawn By	Submittal/Revision Description
1	-	24 SEP 10	REY	1ST SUBMITTAL

ROBERT D. McCAULEY
PE 68037
ENCLOS CORP
2770 BLUE WATER RD.
EAGAN, MN 55121
COA 28468

Reviewed For Structural Integrity Only

ROBERT D. McCAULEY
No 68037
STATE OF FLORIDA
PROFESSIONAL ENGINEER
11-2-11

Date	Scale
22 MAR 10	FULL

Project No.
7545 - L.M.I.

Drawing Title
VERTICAL DETAILS
7545 SERIES
CURTAINWALL L.M.I.

Sheet No.
21/61

mporatusic - 10/Aug/11 9:03 AM

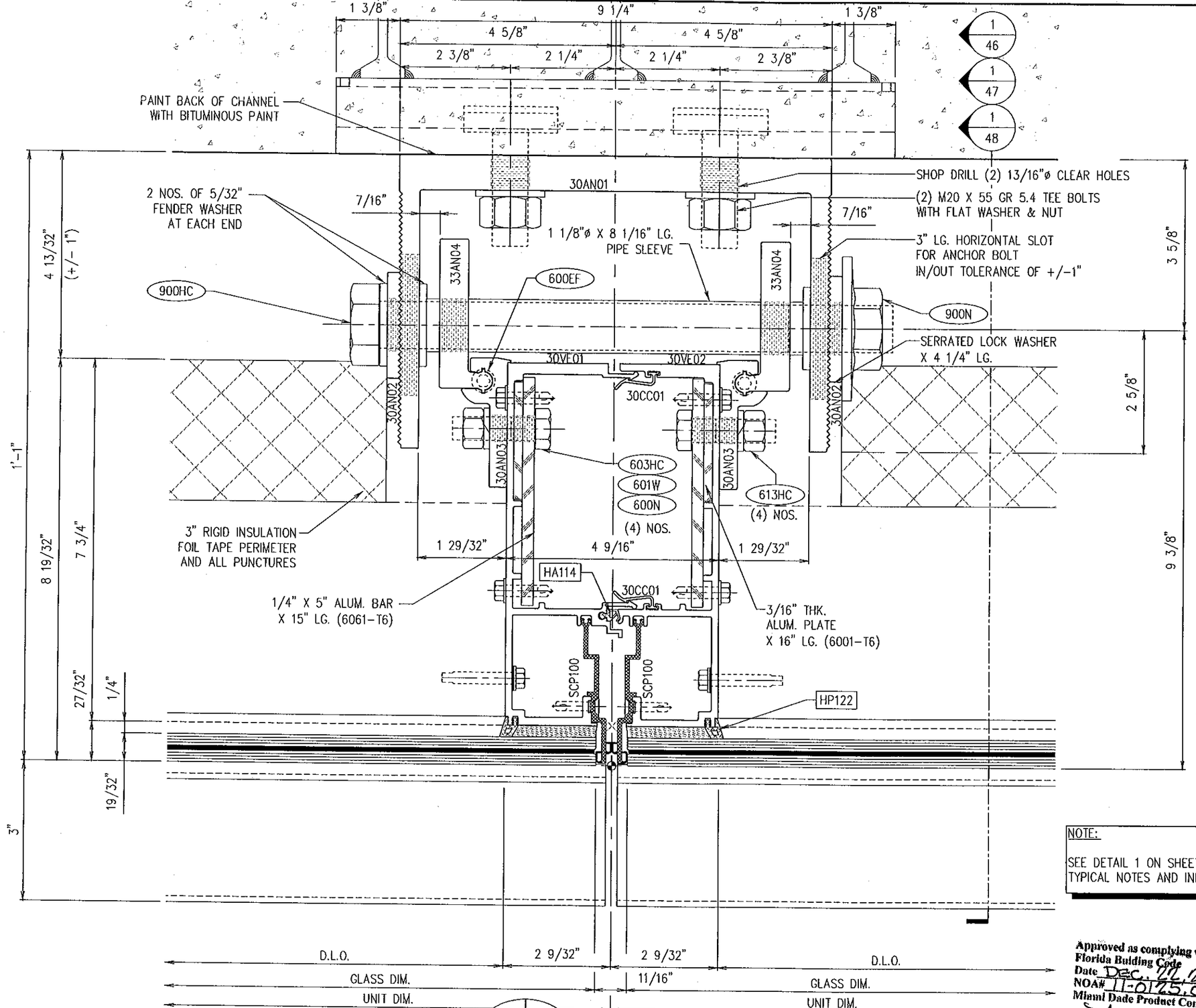

1 – FACE OF SLAB ANCHOR W/O COVERS

22 – Scale: FULL

NOTE: SEE SHEET 30 FOR ALTERNATE T.O. SLAB ANCHOR

NOTE:

SEE DETAIL 1 ON SHEET 9 FOR TYPICAL NOTES AND INFORMATION

Approved as complying with the Florida Building Code
Date Dec. 7th 2011
NOA# 11-0125.01
Miami Dade Product Control
By Manuel Perez

enclos corp
2770 Blue Water Rd.
Eagan, MN 55121
Tel. 651-796-6100
Fax 651-994-6360

No.	Sub. No.	Rev. No.	Date	Drawn By	Submittal/Revision Description
	1	–	24 SEP 10	MGD	1ST SUBMITTAL

ROBERT D. McCAULEY
PE 68037
ENCLOS CORP
2770 BLUE WATER RD.
EAGAN, MN 55121
COA 28468

Reviewed for Structural Integrity Only

ROBERT D. McCAULEY No. 68037 STATE OF FLORIDA PROFESSIONAL ENGINEER

Robert D. McCauley 11-2-11

Date: Scale: FULL

Project No. 7545 – L.M.I.

Drawing Title

ANCHOR DETAIL
7545 SERIES
CURTAINWALL L.M.I.

Sheet No. 22/61

mporotusle – 26/Oct/11 9:39 AM

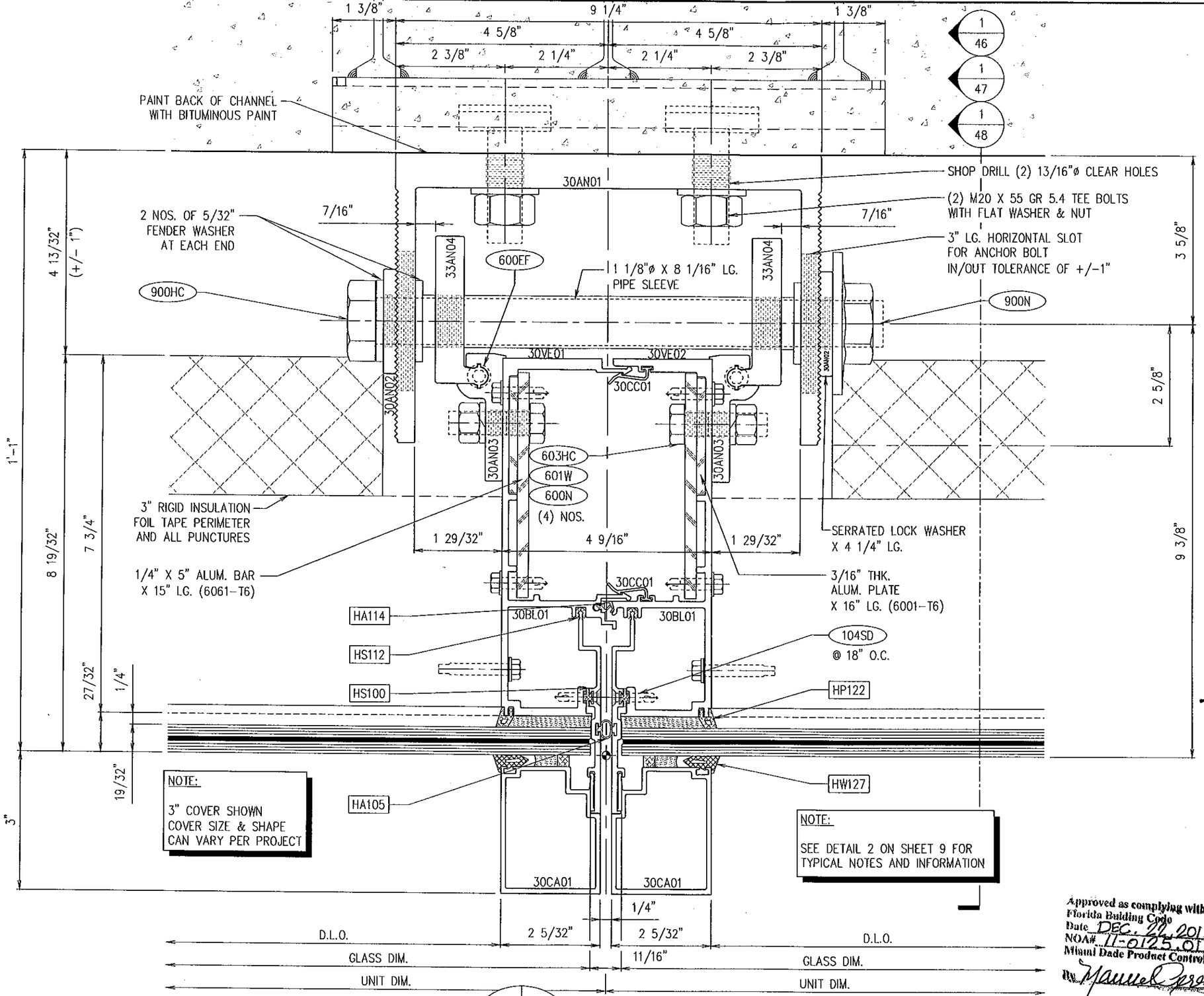

1 – 23 –

FACE OF SLAB ANCHOR W/ COVERS

Scale: FULL

NOTE: SEE SHEET 30 FOR ALTERNATE T.O. SLAB ANCHOR

Approved as complying with the Florida Building Code
Date DEC. 22, 2011
NOA# 11-0125.01
Miami Dade Product Control
By Manuel Perez

enclos corp
2770 Blue Water Rd.
Eagan, MN 55121
Tel. 651-796-6100
Fax 651-994-6360

Sub. No.	Rev. No.	Date	Drawn By	Submittal/Revision Description
1	–	24 SEP 10	MGD	1ST SUBMITTAL

ROBERT D. McCAULEY
PE 68037
ENCLOS CORP
2770 BLUE WATER RD.
EAGAN, MN 55121
COA 28468

Reviewed For Structural Integrity Only

ROBERT D. McCAULEY LICENSE No 68037 STATE OF FLORIDA PROFESSIONAL ENGINEER

11-2-11

Date: Scale: FULL

Project No. 7545 – L.M.I.

Drawing Title

ANCHOR DETAIL
7545 SERIES
CURTAINWALL L.M.I.

Sheet No. 23/61

mporotusic – 26/Oct/11 9:40 AM

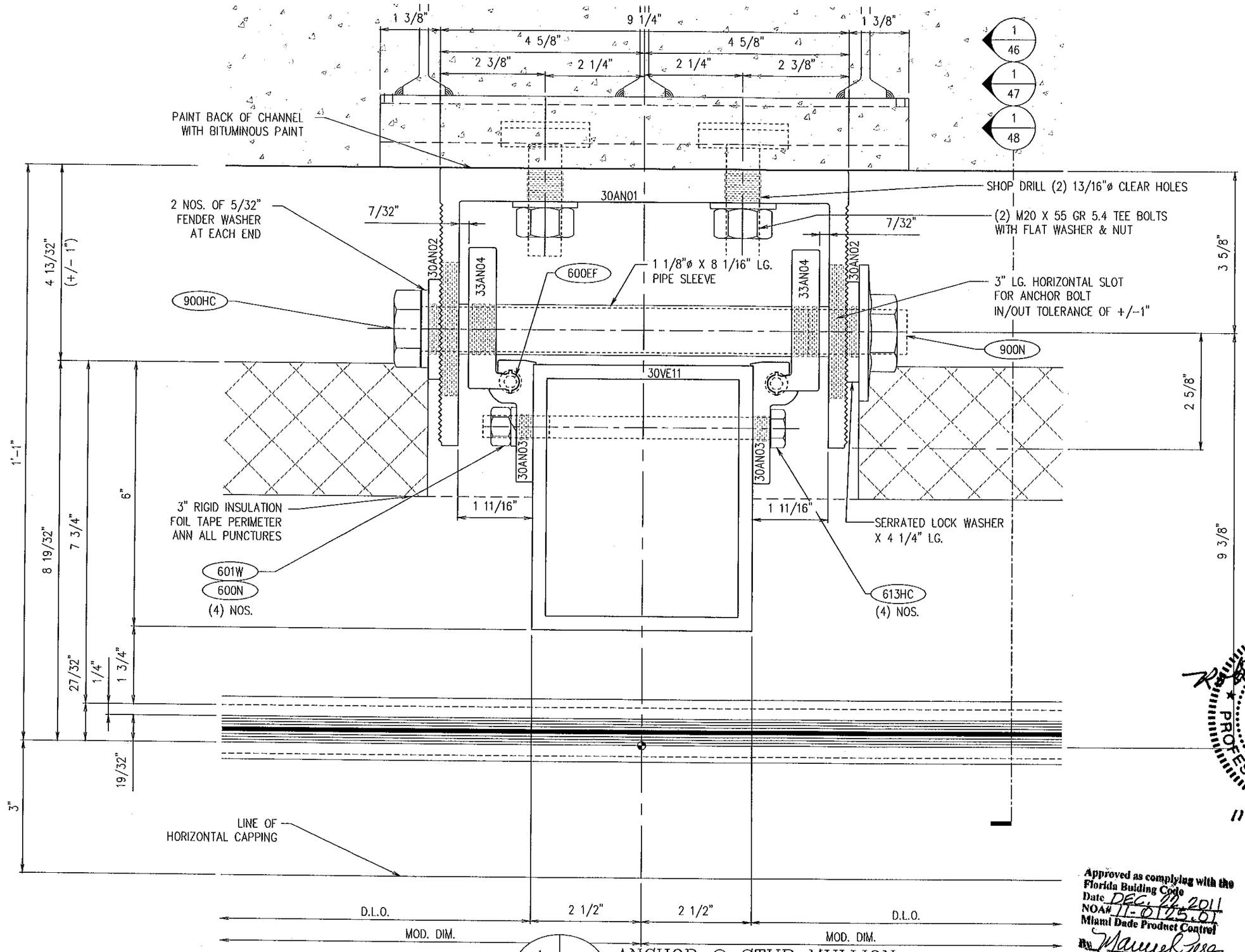

1 | – | 24 | –

ANCHOR @ STUB MULLION

Scale: FULL

Approved as complying with the Florida Building Code
Date DEC. 22, 2011
NOA# 11-0125.01
Miami Dade Product Control
By Manuel Perez

enclos corp
2770 Blue Water Rd.
Eagan, MN 55121
Tel. 651-796-6100
Fax 651-994-6360

Sub. No.	Rev. No.	Date	Drawn By	Submittal/Revision Description
1	–	24 SEP 10	MGD	1ST SUBMITTAL

ROBERT D. McCAULEY
PE 68037
ENCLOS CORP
2770 BLUE WATER RD.
EAGAN, MN 55121
COA 28468

Reviewed For Structural Integrity Only

ROBERT D. McCAULEY LICENSE No 68037 STATE OF FLORIDA PROFESSIONAL ENGINEER

11-2-11

Date 07 APR 10 | Scale FULL

Project No. 7545 – L.M.I.

Drawing Title

ANCHOR DETAIL
7545 SERIES
CURTAINWALL L.M.I.

Sheet No. 24/61

mporotusic – 26/Oct/11 9:40 AM

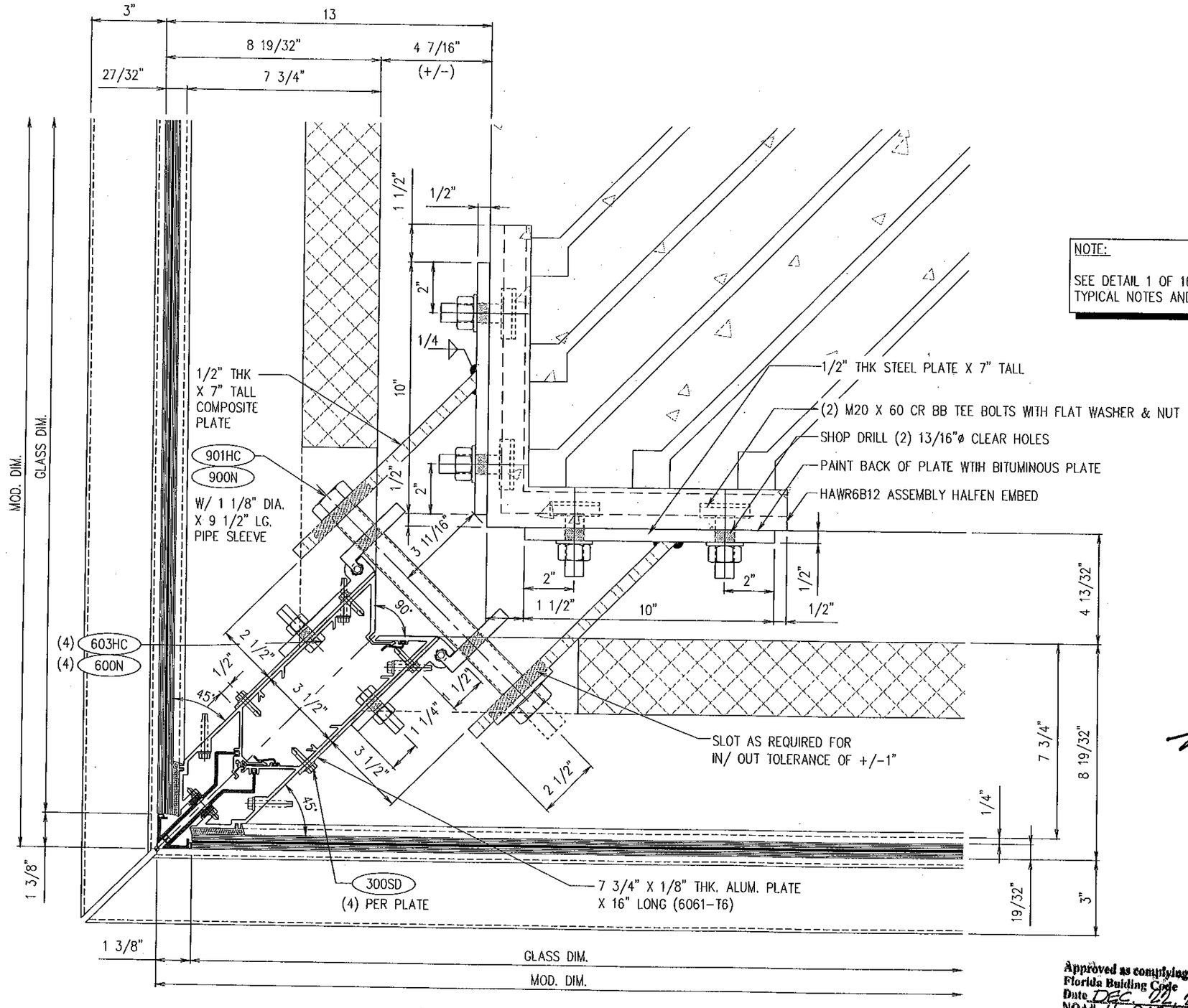

NOTE:

SEE DETAIL 1 OF 16 FOR TYPICAL NOTES AND INFORMATION

1	–
25	–

90° OUTSIDE CORNER ANCHOR W/O COVERS

Scale: HALF

Approved as complying with the Florida Building Code
Date DEC. 22, 2011
NOA# 11-0125.01
Miami Dade Product Control
By Manuel Perez

enclos corp
2770 Blue Water Rd.
Eagan, MN 55121
Tel. 651-796-6100
Fax 651-994-6360

Sub. No.	Rev. No.	Date	Drawn By	Submittal/Revision Description
1	–	24 SEP 10	MGD	1ST SUBMITTAL

ROBERT D. McCAULEY
PE 68037
ENCLOS CORP
2770 BLUE WATER RD.
EAGAN, MN 55121
COA 28468

Reviewed For Structural Integrity Only

ROBERT D. McCAULEY
LICENSED
No 68037
STATE OF FLORIDA
PROFESSIONAL ENGINEER

11-2-11

Date	Scale
07 APR 10	HALF

Project No.
7545 – L.M.I.

Drawing Title

ANCHOR DETAIL
7545 SERIES
CURTAINWALL L.M.I.

Sheet No.
25/61

mporatusic – 18/Aug/11 10:11 AM

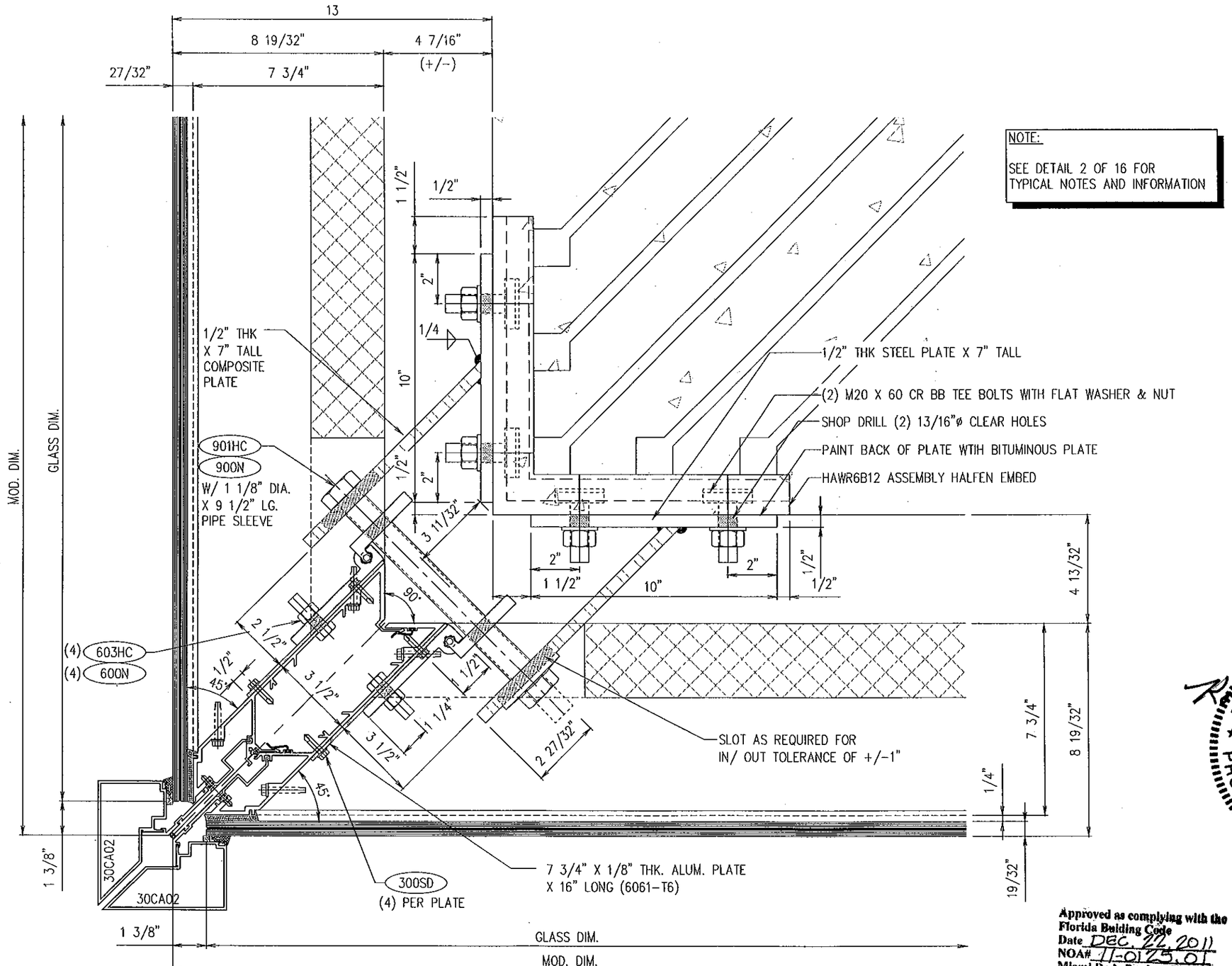

NOTE:

SEE DETAIL 2 OF 16 FOR
TYPICAL NOTES AND INFORMATION

Approved as complying with the
Florida Building Code
Date DEC. 22, 2011
NOA# 11-0125.01
Miami Dade Product Control

1	–
26	–

90° OUTSIDE CORNER ANCHOR W/ COVERS

Scale: HALF

enclos corp
2770 Blue Water Rd.
Eagan, MN 55121
Tel. 651-796-6100
Fax 651-994-6360

Sub. No.	Rev. No.	Date	Drawn By	Submittal/Revision Description
1	–	24 SEP 10	MGD	1ST SUBMITTAL

ROBERT D. McCAULEY
PE 68037
ENCLOS CORP
2770 BLUE WATER RD.
EAGAN, MN 55121
(651) 28468

Reviewed for
Structural Integrity Only

ROBERT D. McCAULEY
No. 68037
STATE OF FLORIDA
PROFESSIONAL ENGINEER

11-2-11

Date	Scale
07 APR 10	HALF

Project No.
7545 – L.M.I.

Drawing Title

ANCHOR DETAIL
7545 SERIES
CURTAINWALL L.M.I.

Sheet No.
26/61

mporatusic – 18/Aug/11 10:11 AM

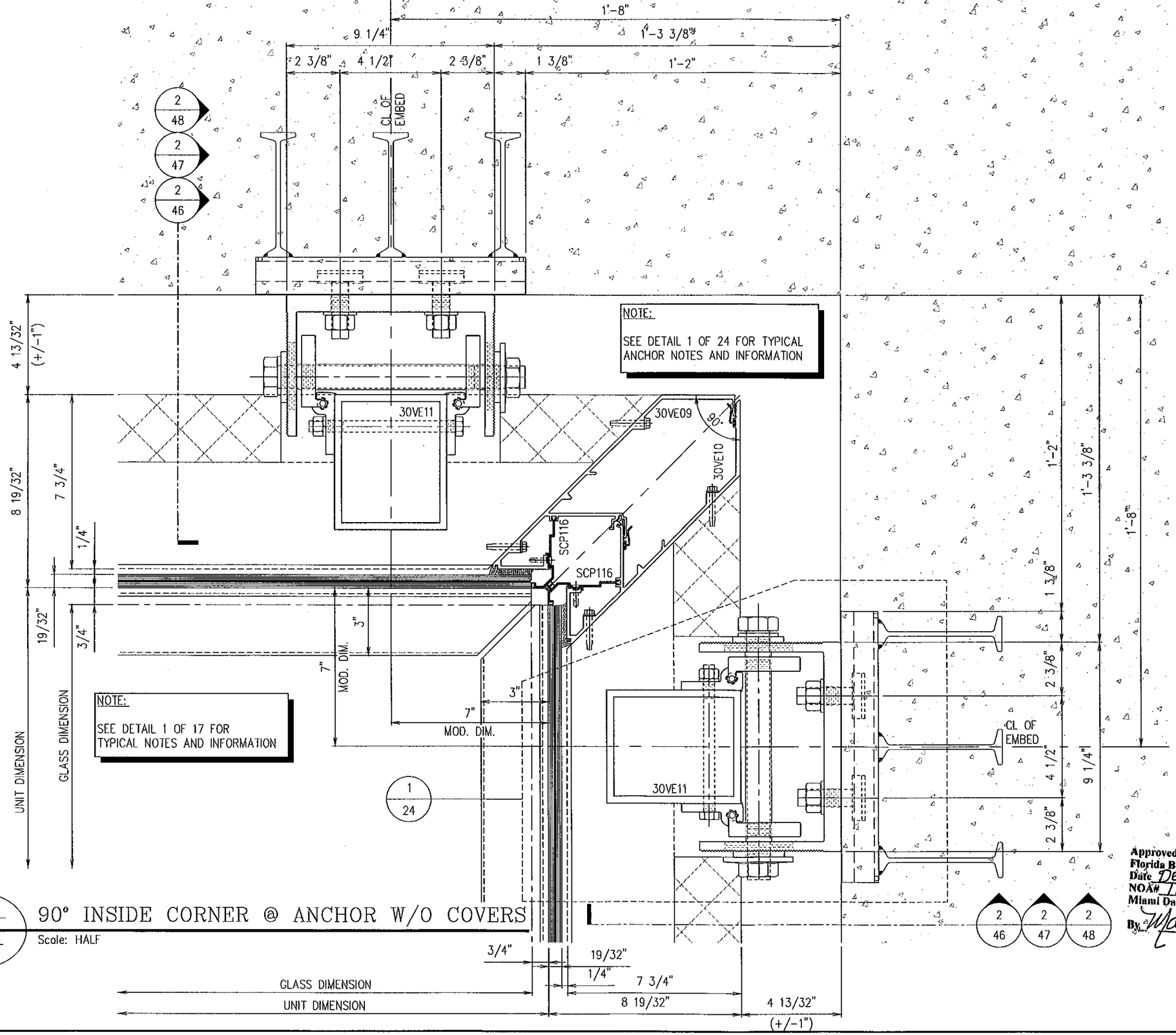

NOTE:

SEE DETAIL 1 OF 24 FOR TYPICAL ANCHOR NOTES AND INFORMATION

NOTE:

SEE DETAIL 1 OF 17 FOR TYPICAL NOTES AND INFORMATION

1 / 27 — 90° INSIDE CORNER @ ANCHOR W/O COVERS

Scale: HALF

Approved as complying with the Florida Building Code
Date DEC. 22, 2011
NOA# 11-0125.01
Miami Dade Product Control
By Manuel Perez

ROBERT D. McCAULEY
PE 68037
STATE OF FLORIDA
PROFESSIONAL ENGINEER
11-2-11

Reviewed for Structural Integrity Only

enclos corp
2770 Blue Water Rd.
Eagan, MN 55121
Tel. 651-796-6100
Fax 651-994-6360

Sub No.	Rev No.	Date	Drawn By	Submittal/Revision Description
1	-	24 SEP 10	MGD	1ST SUBMITTAL

ROBERT D. McCAULEY
PE 68037
ENCLOS CORP
2770 BLUE WATER RD.
EAGAN, MN 55121
651-796-6100

Date 07 APR 10

Scale HALF

Project No. 7545 - L.M.I.

Drawing Title

ANCHOR DETAILS
7545 SERIES
CURTAINWALL L.M.I.

Sheet No. 27/61

mporalusic - 26/Oct/11 9:41 AM

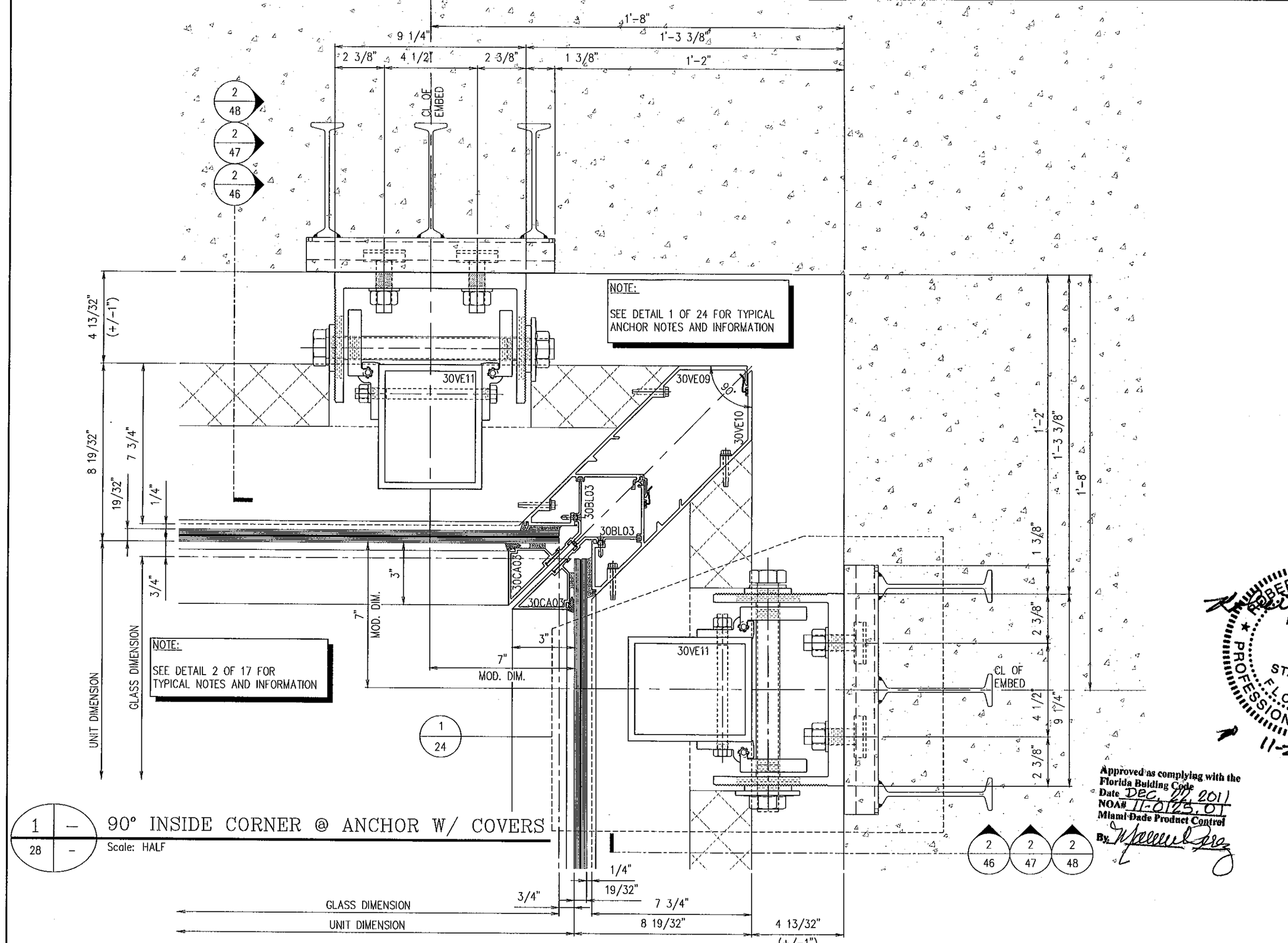

Approved as complying with the Florida Building Code
Date DEC. 22 2011
NOA# 11-0175.01
Miami-Dade Product Control
By

enclos corp
2770 Blue Water Rd.
Eagan, MN 55121
Tel. 651-796-6100
Fax 651-994-6360

No.	Sub.	Rev.	Date	Drawn By	Submittal/Revision Description
	1	–	24 SEP 10	MGD	1ST SUBMITTAL

ROBERT D. McCAULEY
PE 68037
ENCLOS CORP
2770 BLUE WATER RD.
EAGAN, MN 55121

ROBERT D. McCAULEY No 68037 STATE OF FLORIDA PROFESSIONAL ENGINEER

11-22-11

Date	Scale
07 APR 10	HALF

Project No.
7545 – L.M.I.

Drawing Title

ANCHOR DETAILS
7545 SERIES
CURTAINWALL L.M.I.

Sheet No.
28/61

mparalusic – 26/Oct/11 9:42 AM

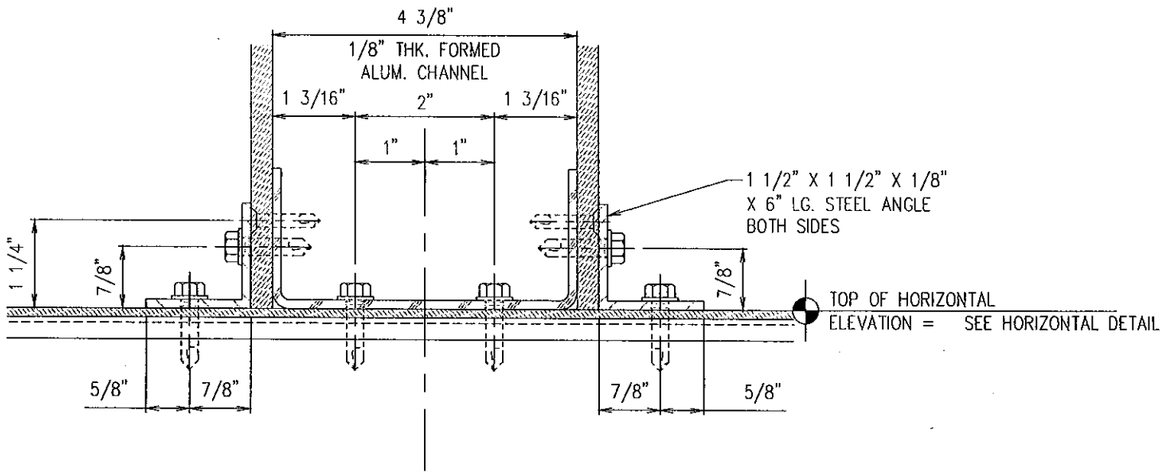

4 – / 29 – SECTION THRU STUB MULLION
Scale: FULL (AT ANCHOR LOCATION)

NOTE:
SEE DETAIL 2 OF 36 FOR TYPICAL ANCHOR NOTES AND INFORMATION

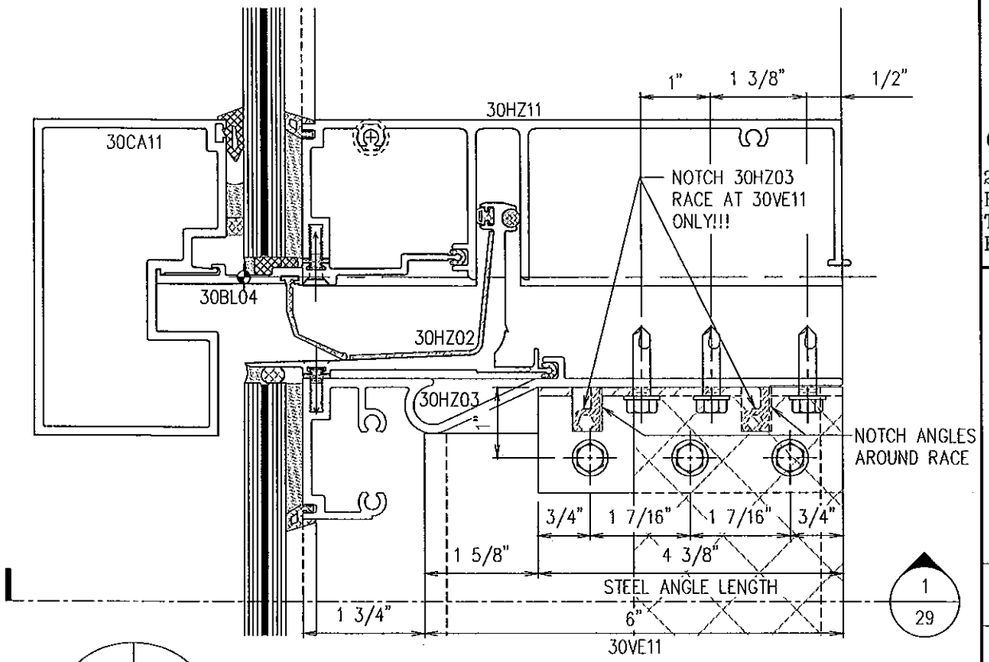

3 – / 29 – STUB MULLION @ HEAD HORIZONTAL
Scale: FULL

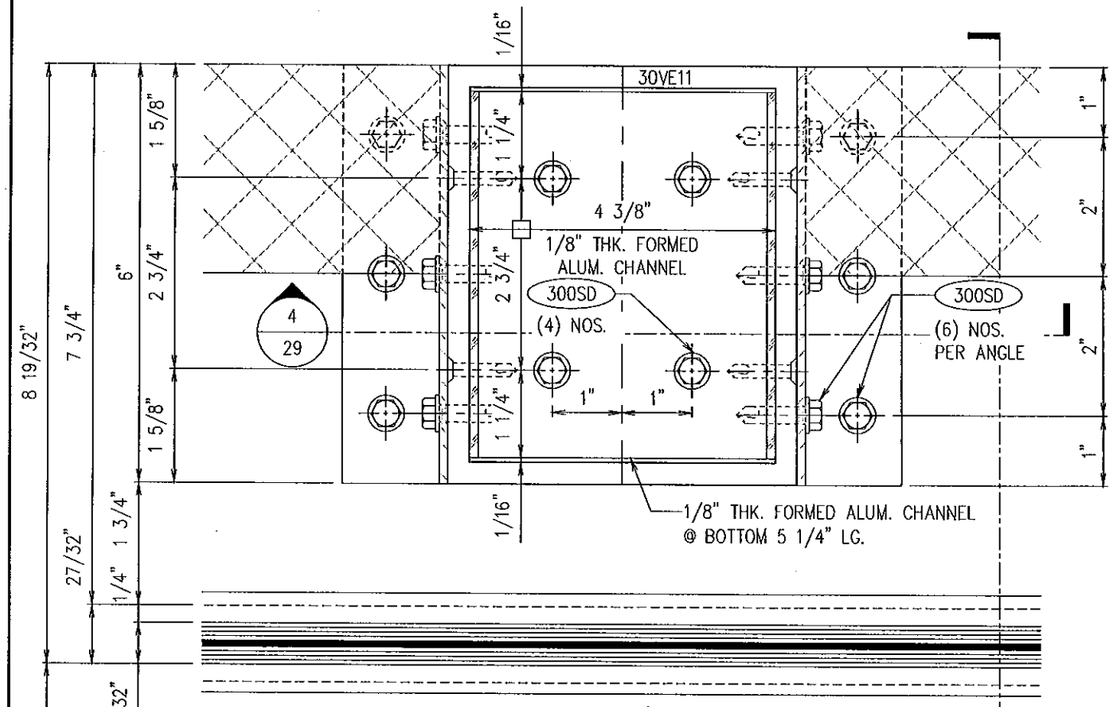

1 – / 29 – STUB MULLION @ SPANDREL
Scale: FULL

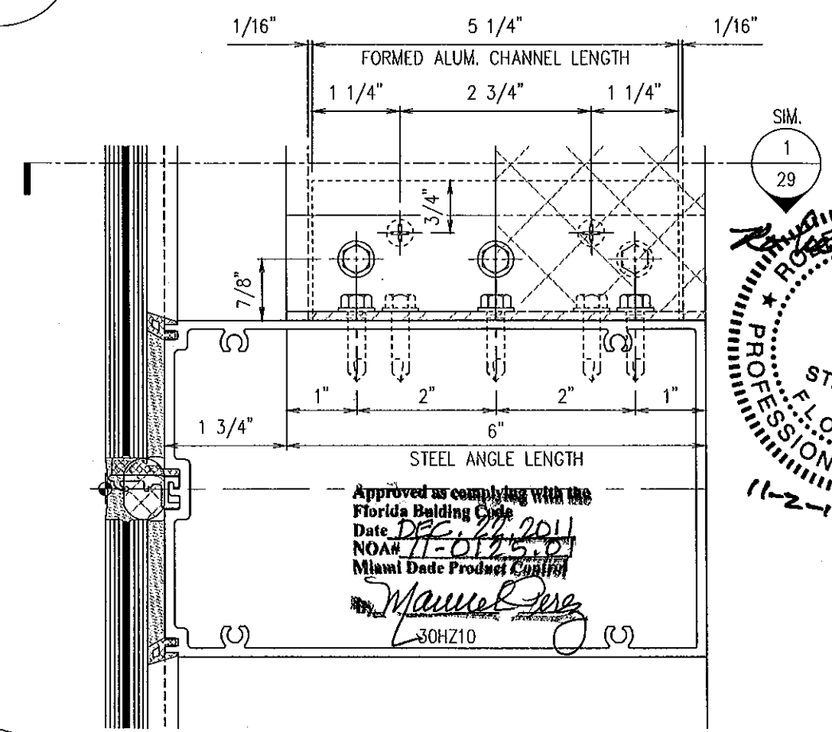

Approved as complying with the Florida Building Code
Date DEC. 22, 2011
NOA# 11-0125.01
Miami Dade Product Control
By Manuel Perez

2 – / 29 – STUB MULLION @ INTERMEDIATE HORIZONTAL
Scale: FULL

2 / 29 @ INTERMEDIATE HORIZONTAL
3 / 29 @ HEAD HORIZONTAL

enclos corp
2770 Blue Water Rd.
Eagan, MN 55121
Tel. 651-796-6100
Fax 651-994-6360

Sub. No.	Rev. No.	Date	Drawn By	Submittal/Revision Description
1	–	24 SEP 10	MGD	1ST SUBMITTAL

ROBERT D. McCAULEY
PE 68037
ENCLOS CORP
2770 BLUE WATER RD.
EAGAN, MN 55121
COA 28468

Reviewed for Structural Integrity Only

ROBERT D. McCAULEY
No 68037
STATE OF FLORIDA
PROFESSIONAL ENGINEER
11-2-11

Date 28 APR 10
Scale FULL
Project No. 7545 – L.M.I.
Drawing Title
HORIZONTAL DETAILS
7545 SERIES
CURTAINWALL L.M.I.
Sheet No. 29/61

mporotusic – 26/Oct/11 9:44 AM

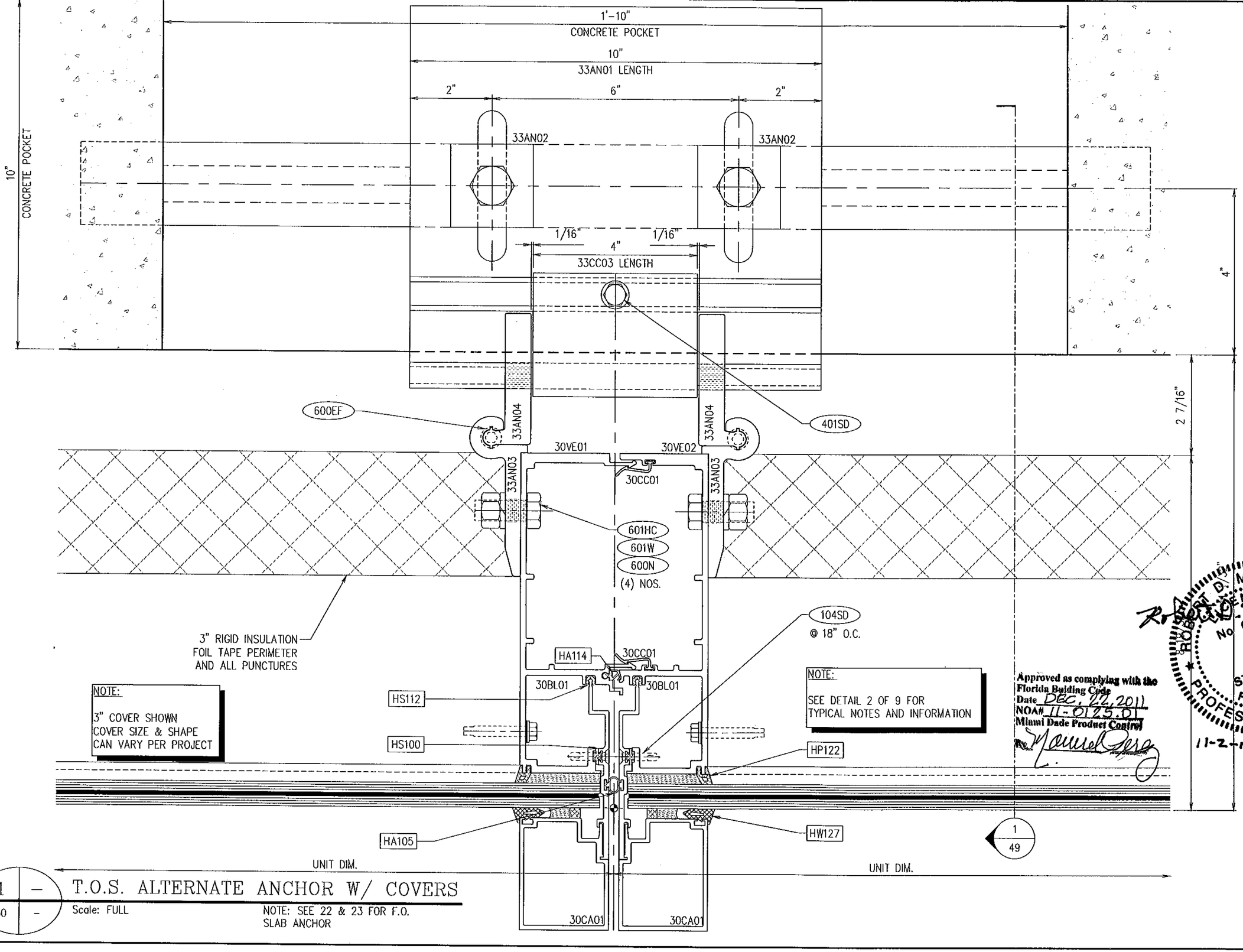

NOTE:
3" COVER SHOWN
COVER SIZE & SHAPE
CAN VARY PER PROJECT

NOTE:
SEE DETAIL 2 OF 9 FOR
TYPICAL NOTES AND INFORMATION

Approved as complying with the Florida Building Code
Date DEC. 22, 2011
NOA# 11-0125.01
Miami Dade Product Control
By Manuel Perez

ROBERT D. McCAULEY
LICENSED
No 68037
STATE OF FLORIDA
PROFESSIONAL ENGINEER
11-2-11

1	–
30	–

T.O.S. ALTERNATE ANCHOR W/ COVERS

Scale: FULL

NOTE: SEE 22 & 23 FOR F.O. SLAB ANCHOR

enclos corp
2770 Blue Water Rd.
Eagan, MN 55121
Tel. 651-796-6100
Fax 651-994-6360

Sub. No.	Rev. No.	Date	Drawn By	Submittal/Revision Description
1	–	24 SEP 10	MGD	1ST SUBMITTAL

ROBERT D. McCAULEY
PE 68037
ENCLOS CORP
2770 BLUE WATER RD.
EAGAN, MN 55121

Reviewed For Structural Integrity Only

Date	Scale
07 APR 10	FULL

Project No.
7545 – L.M.I.

Drawing Title
ANCHOR DETAIL
7545 SERIES
CURTAINWALL L.M.I.

Sheet No.
30/61

mporotusic – 10/Aug/11 9:06 AM

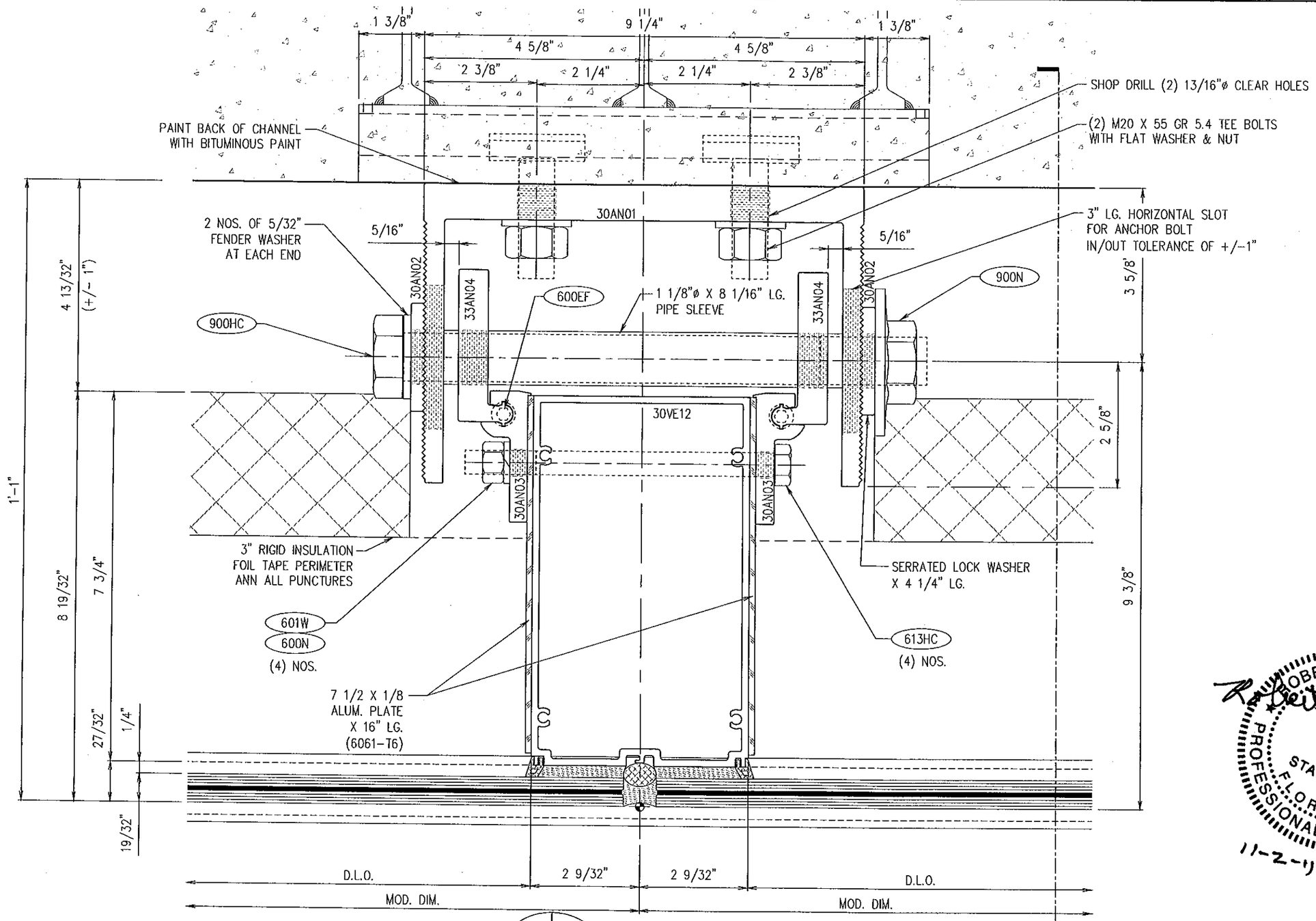

1 | – | 31 | –

ANCHOR @ INTM. MULLION

Scale: FULL

1 / 46 SIM.

1 / 47 SIM.

1 / 48 SIM.

Approved as complying with the Florida Building Code
Date DEC. 22, 2011
NOA# 11-0125.01
Miami Dade Product Control
By [signature]

enclos corp
2770 Blue Water Rd.
Eagan, MN 55121
Tel. 651-796-6100
Fax 651-994-6360

Sub. No.	Rev. No.	Date	Drawn By	Submittal/Revision Description
1	–	24 SEP 10	MGD	1ST SUBMITTAL

ROBERT D. McCAULEY
PE 68037
ENCLOS CORP
2770 BLUE WATER RD.
EAGAN, MN 55121
COA 28468

Reviewed for Structural Integrity Only

ROBERT D. McCAULEY LICENSE NO. 68037 STATE OF FLORIDA PROFESSIONAL ENGINEER

11-2-11

Date	Scale
07 APR 10	FULL

Project No.
7545 – L.M.I.

Drawing Title
ANCHOR DETAIL
7545 SERIES
CURTAINWALL L.M.I.

Sheet No.
31/61

mporotusic – 26/Oct/11 9:45 AM

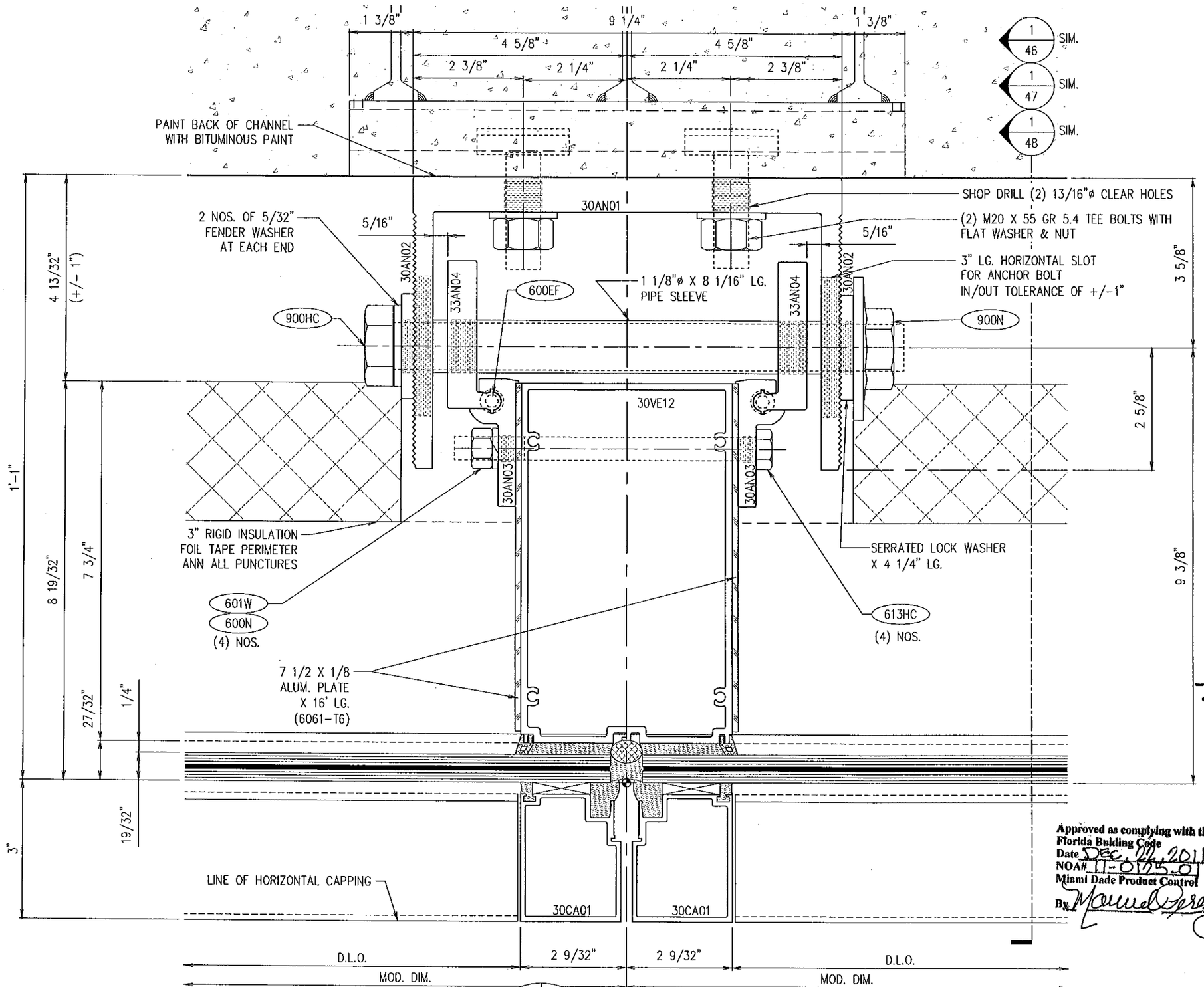

1 — 32 — ANCHOR @ INTM. MULLION

Scale: FULL

Approved as complying with the Florida Building Code
Date Dec. 22, 2011
NOA# 11-0125.01
Miami Dade Product Control
By Manuel Perez

ROBERT D. McCAULEY
STATE OF FLORIDA
PROFESSIONAL ENGINEER
No 68037
11-2-11

Revised For Structural Integrity Only

enclos corp
2770 Blue Water Rd.
Eagan, MN 55121
Tel. 651-796-6100
Fax 651-994-6360

Sub. No.	Rev. No.	Date	Drawn By	Submittal/Revision Description
1	–	24 SEP 10	MGD	1ST SUBMITTAL

ROBERT D. McCAULEY
PE 68037
ENCLOS CORP
2770 BLUE WATER RD.
EAGAN, MN 55121
COA 28468

Date APR 10

Scale FULL

Project No. 7545 – L.M.I.

Drawing Title

ANCHOR DETAIL
7545 SERIES
CURTAINWALL L.M.I.

Sheet No. 32/61

mparatusic – 26/Oct/11 9:46 AM

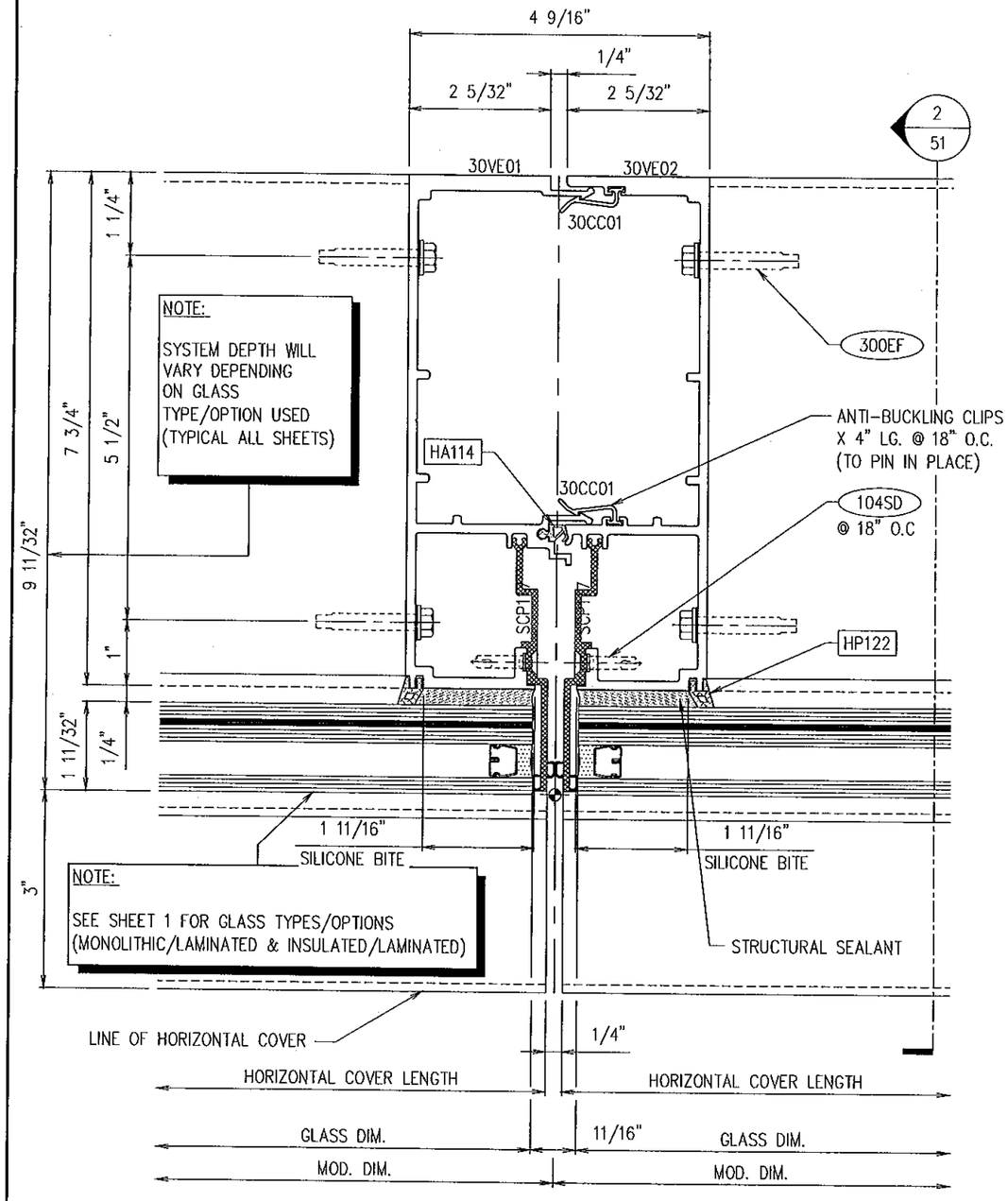

NOTE:
SYSTEM DEPTH WILL VARY DEPENDING ON GLASS TYPE/OPTION USED (TYPICAL ALL SHEETS)

NOTE:
SEE SHEET 1 FOR GLASS TYPES/OPTIONS (MONOLITHIC/LAMINATED & INSULATED/LAMINATED)

1 | – | 33 | –
VERT. @ VISION W/O COVERS
Scale: FULL (WITH INSULATED GLASS)

NOTE:
SEE SHEET 9 FOR MONOLITHIC/LAMINATED GLASS OPTION

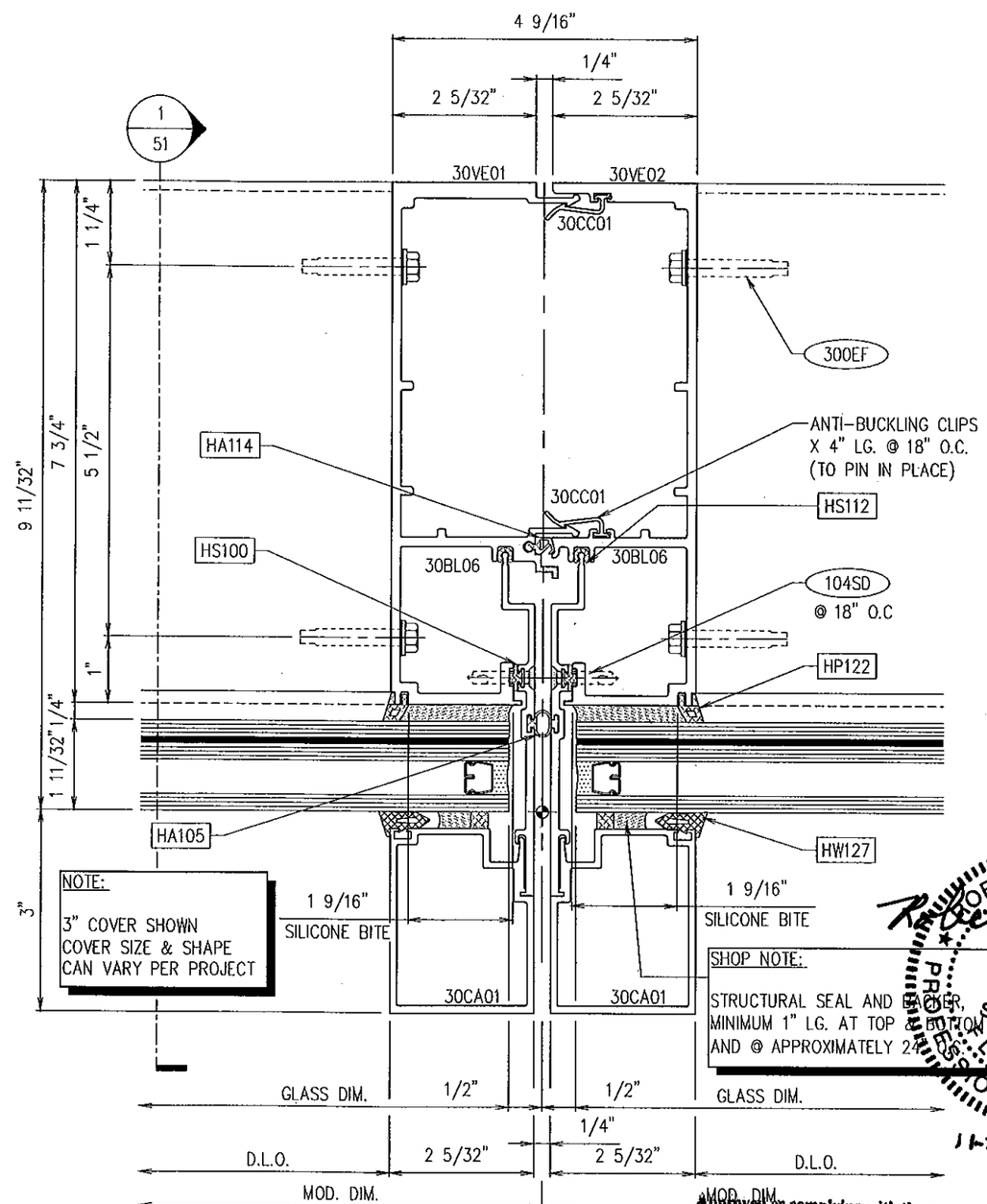

NOTE:
3" COVER SHOWN COVER SIZE & SHAPE CAN VARY PER PROJECT

SHOP NOTE:
STRUCTURAL SEAL AND BACKER, MINIMUM 1" LG. AT TOP & BOTTOM AND @ APPROXIMATELY 24" O.C.

2 | – | 33 | –
VERT. @ VISION W/ COVERS
Scale: FULL (WITH INSULATED GLASS)

Approved as complying with the Florida Building Code
Date Dec. 22, 2011
NOA# 11-0125.01
Miami Dade Product Control
By Manuel Perez

enclos corp
2770 Blue Water Rd.
Eagan, MN 55121
Tel. 651-796-6100
Fax 651-994-6360

Sub. No.	Rev. No.	Date	Drawn By	Submittal/Revision Description
1	–	24 SEP 10	MGD	1ST SUBMITTAL

ROBERT D. McCAULEY
PE 68037
ENCLOS CORP
2770 BLUE WATER RD.
EAGAN, MN 55121
COA 28468

Reviewed For Structural Integrity Only

ROBERT D. McCAULEY LICENSED No. 68037 STATE OF FLORIDA PROFESSIONAL ENGINEER
11-2-11

Date	Scale
23 MAR 10	FULL

Project No.
7545 – L.M.I.

Drawing Title
VERTICAL DETAILS
7545 SERIES
CURTAINWALL L.M.I.

Sheet No.
33/61

mparalusic – 26/Oct/11 9:47 AM

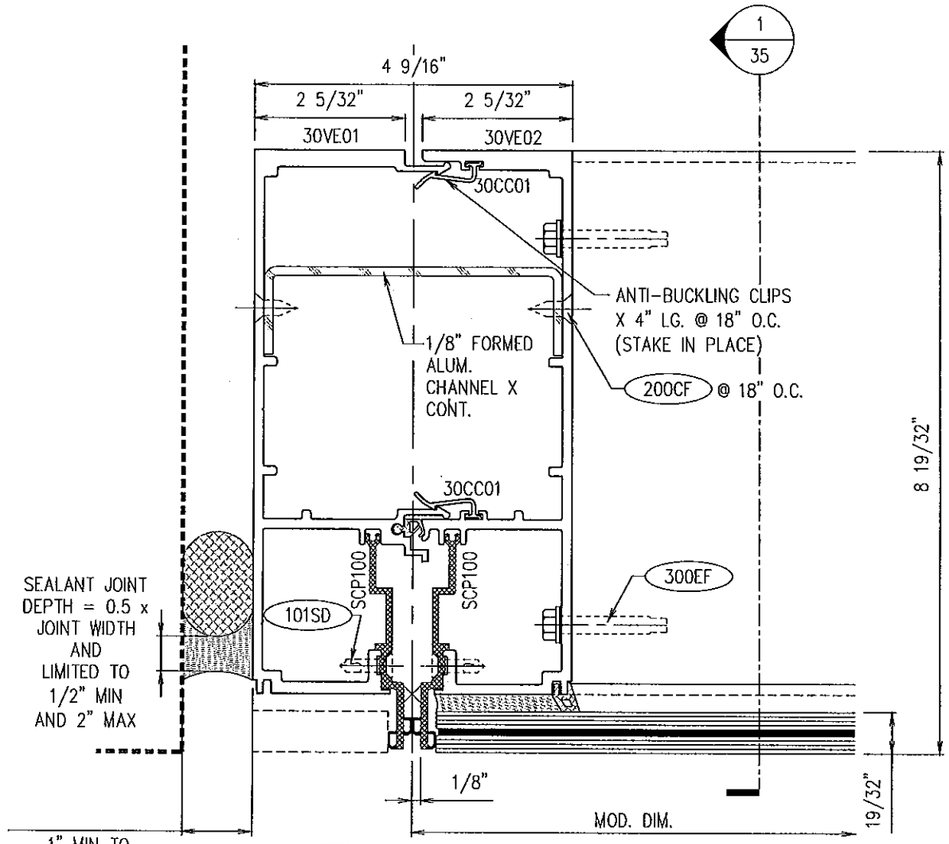

1 – JAMB DETAIL AT VISION
34 –
Scale: FULL

Approved as complying with the
Florida Building Code
Date DEC. 22, 2011
NOA# 11-0125.01
Miami Dade Product Control
By Manuel Perez

enclos corp
2770 Blue Water Rd.
Eagan, MN 55121
Tel. 651-796-6100
Fax 651-994-6360

Sub No.	Rev. No.	Date	Drawn By	Submittal/Revision Description
1	–	24 SEP 10	MGD	1ST SUBMITTAL

ROBERT D. McCAULEY
PE 68037
ENCLOS CORP
2770 BLUE WATER RD.
EAGAN, MN 55121
COA 28468

Prepared For
Structural Integrity Only

ROBERT D. McCAULEY
No 68037
STATE OF FLORIDA
PROFESSIONAL ENGINEER
11-2-11

Date 23 MAR 10
Scale FULL

Project No.
7545 – L.M.I.

Drawing Title

VERTICAL DETAILS
7545 SERIES
CURTAIN WALL L.M.I.

Sheet No.
34/61

meltzel – 28/Oct/11 12:58 PM

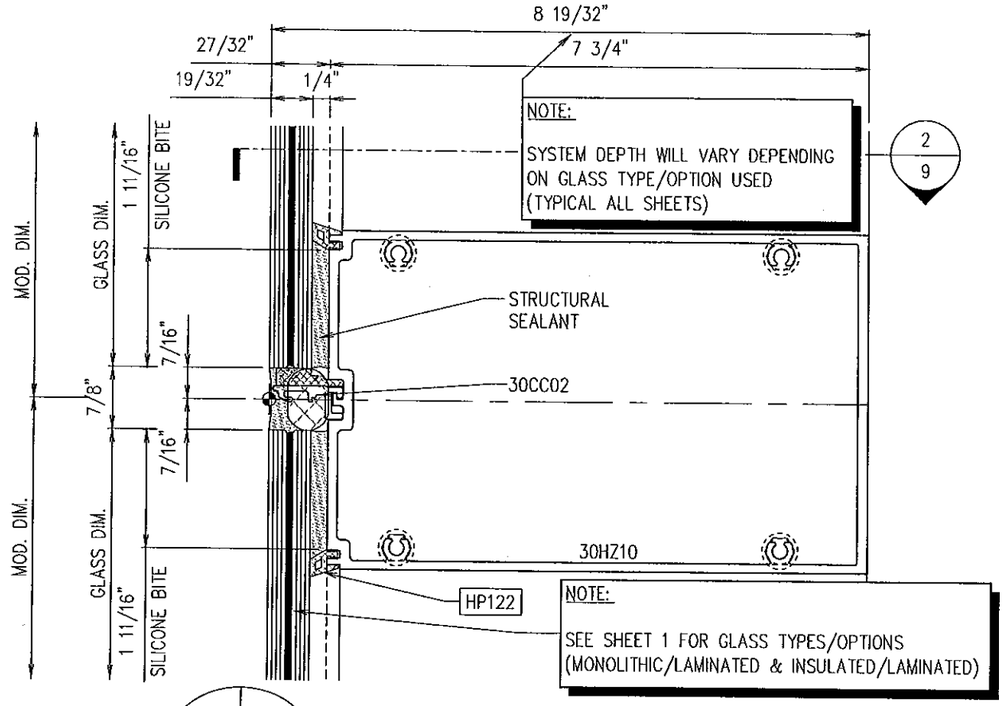

1 – 35 – HORIZONTAL @ VISION W/O COVER
Scale: FULL

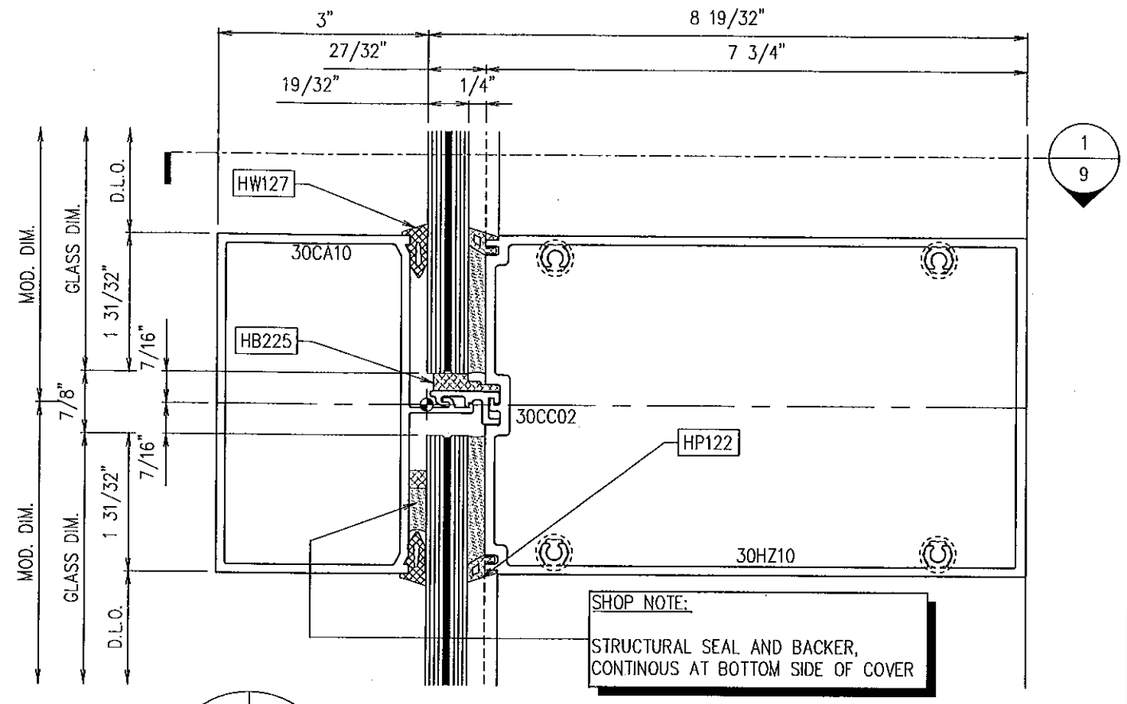

2 – 35 – HORIZONTAL @ VISION W/ COVER
Scale: FULL

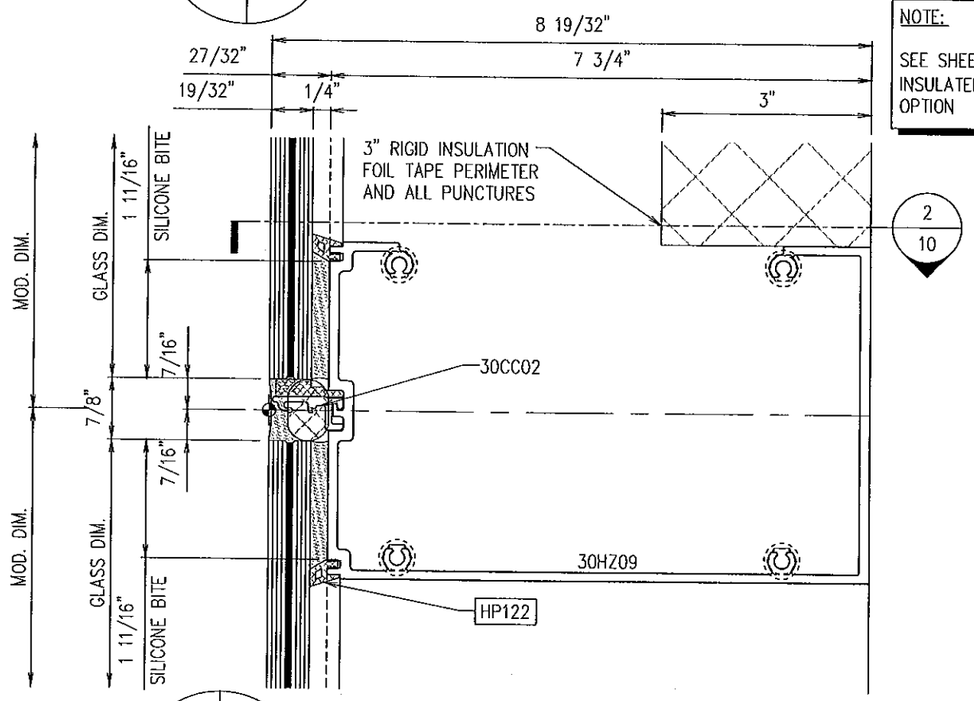

3 – 35 – HORIZONTAL @ SPANDREL W/O COVER
Scale: FULL

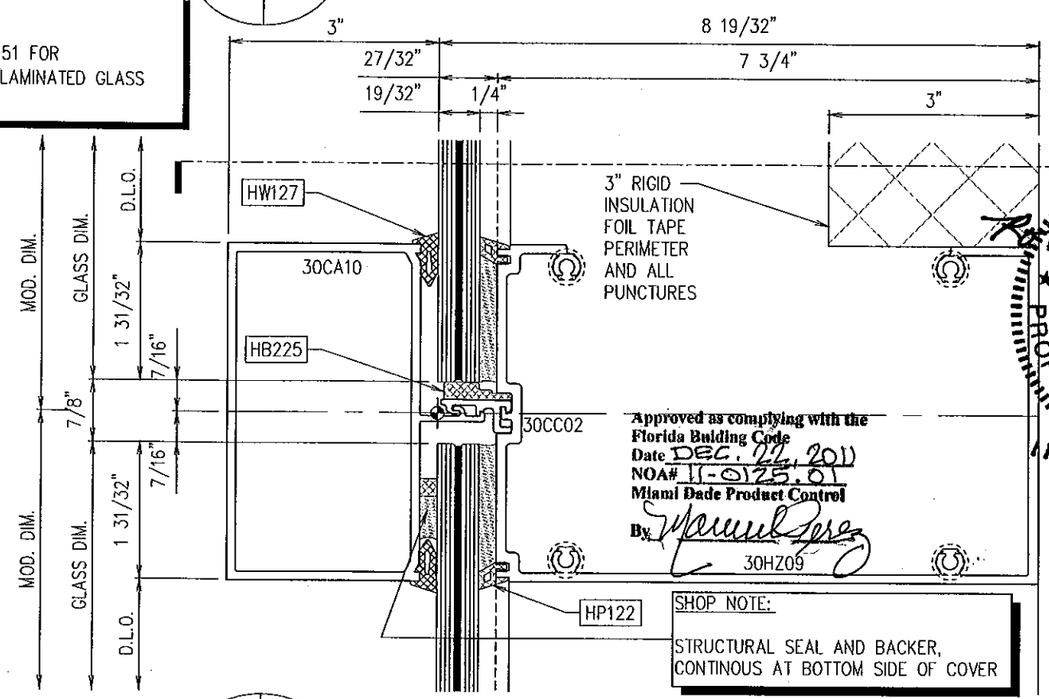

Approved as complying with the Florida Building Code
Date DEC. 22, 2011
NOA# 11-0125.01
Miami Dade Product Control
By Manuel Perez

4 – 35 – HORIZONTAL @ SPANDREL W/ COVER
Scale: FULL

enclos corp
2770 Blue Water Rd.
Eagan, MN 55121
Tel. 651-796-6100
Fax 651-994-6360

Sub. No.	Rev. No.	Date	Drawn By	Submittal/Revision Description
1	-	24 SEP 10	MGD	1ST SUBMITTAL

ROBERT D. McCAULEY
PE 68037
ENCLOS CORP
2770 BLUE WATER RD.
EAGAN, MN 55121
[illegible]

Reviewed For Structural Integrity Only

ROBERT D. McCAULEY
No 68037
STATE OF FLORIDA
PROFESSIONAL ENGINEER
11-2-11

Date	Scale
07 APR 10	FULL

Project No.
7545 – L.M.I.

Drawing Title
HORIZONTAL DETAILS
7545 SERIES
CURTAINWALL L.M.I.

Sheet No.
35/61

mparatusic – 26/Oct/11 9:49 AM

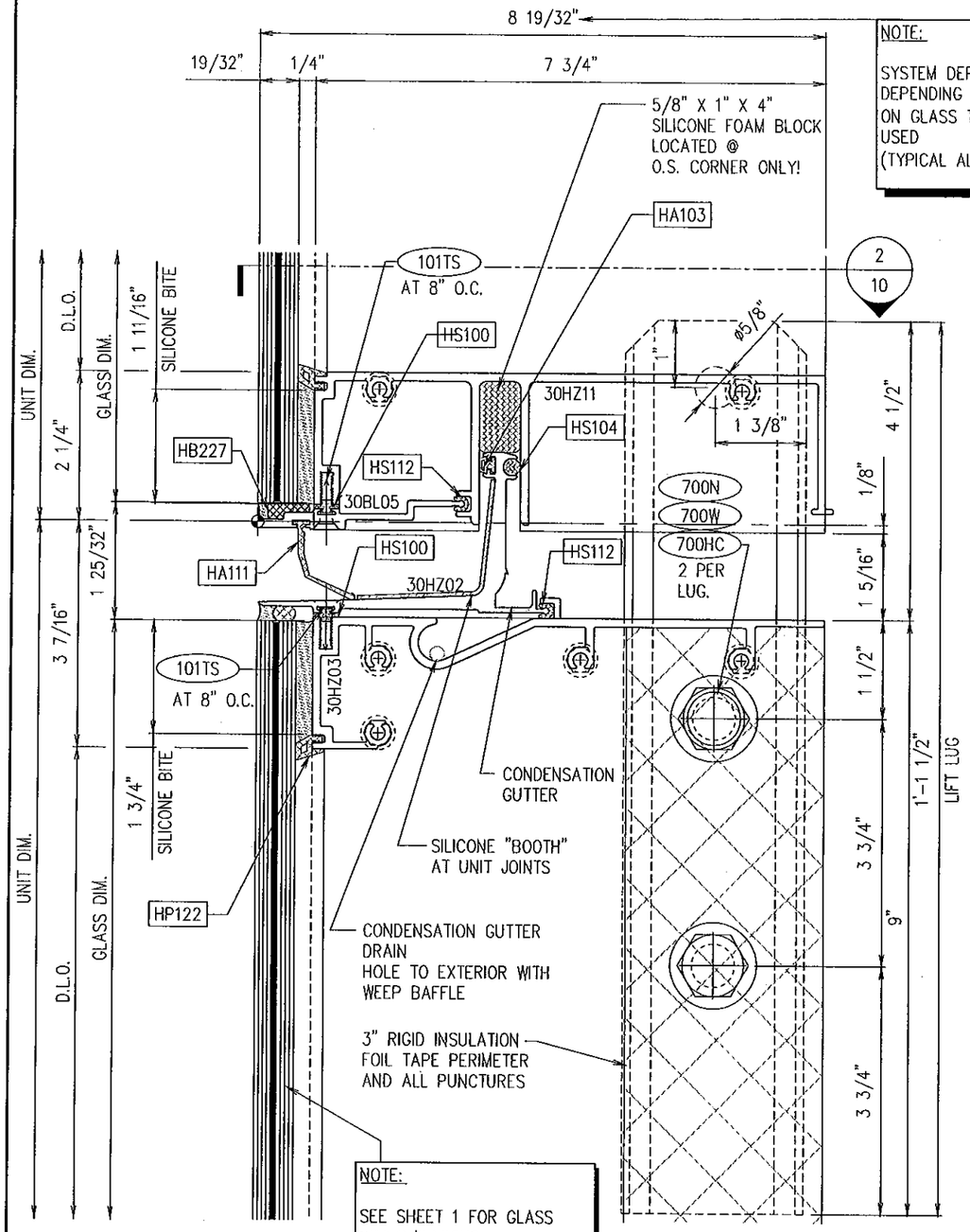

NOTE:

SYSTEM DEPTH WILL VARY DEPENDING ON GLASS TYPE/OPTION USED (TYPICAL ALL SHEETS)

NOTE:

SEE SHEET 1 FOR GLASS TYPES/OPTIONS (MONOLITHIC/LAMINATED & INSULATED/LAMINATED)

1 / 36 TYP. STACK JOINT – WITHOUT COVER

Scale: FULL AT VERTICAL WALL

NOTE:

SEE SHEET 52 FOR INSULATED/LAMINATED GLASS OPTION

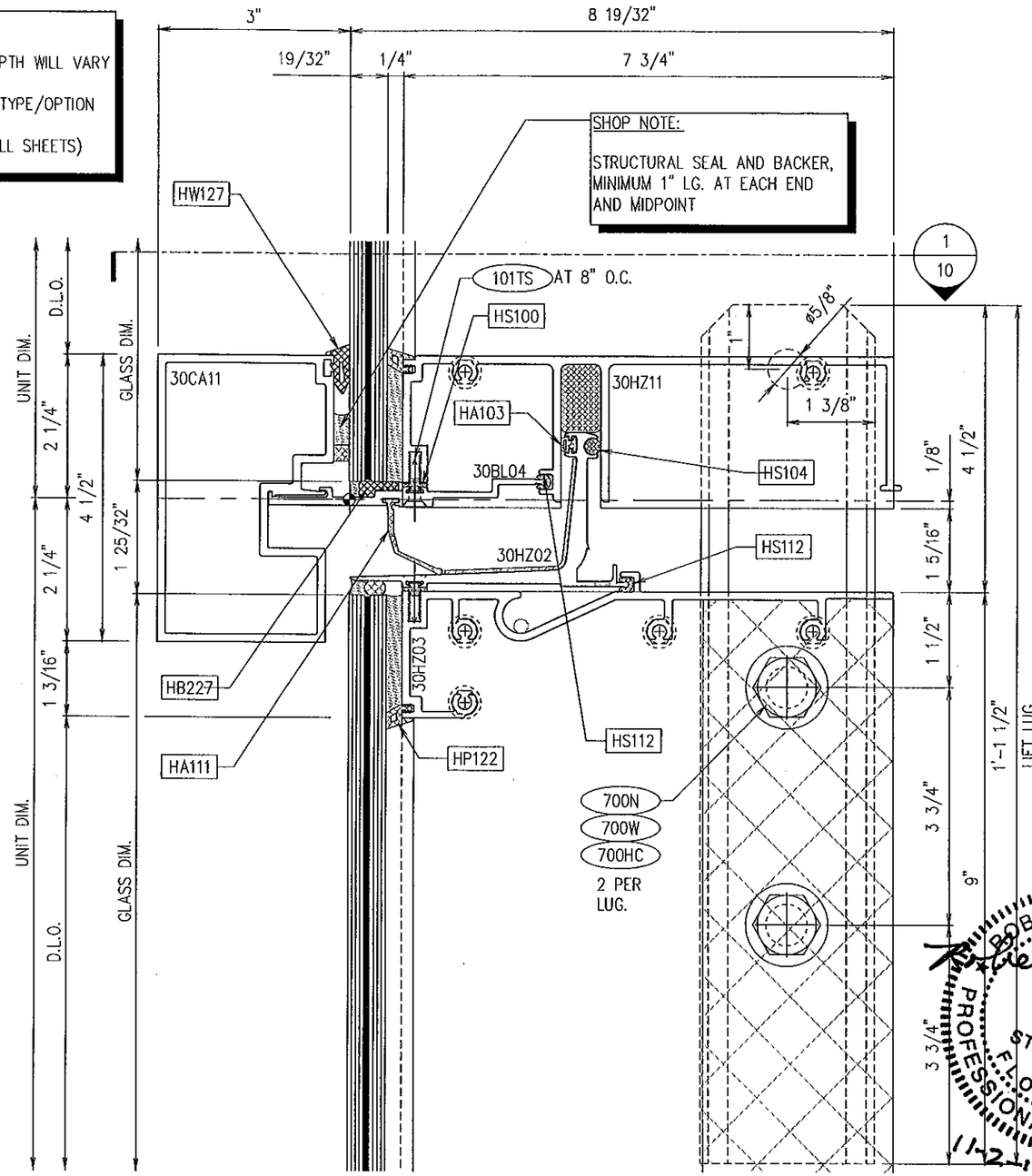

SHOP NOTE:

STRUCTURAL SEAL AND BACKER, MINIMUM 1" LG. AT EACH END AND MIDPOINT

2 / 36 TYP. STACK JOINT – WITH COVER

Scale: FULL AT VERTICAL WALL

Approved as complying with the Florida Building Code
Date DEC. 27, 2011
NOA# 11-0125.01
Miami Dade Product Control
By Manuel Perez

enclos corp
2770 Blue Water Rd.
Eagan, MN 55121
Tel. 651-796-6100
Fax 651-994-6360

No.	Sub. No.	Rev.	Date	Drawn By	Description
	1	–	24 SEP 10	WPB	1ST SUBMITTAL

ROBERT D. McCAULEY
PE 68037
ENCLOS CORP
2770 BLUE WATER RD.
EAGAN, MN 55121
COA 28468

Prepared For Structural Integrity Only

ROBERT D. McCAULEY LICENSE No 68037 STATE OF FLORIDA PROFESSIONAL ENGINEER

Date 06 APR 11 | Scale FULL

Project No. 7545 – L.M.I.

Drawing Title

HORIZONTAL DETAILS
7545 SERIES
CURTAINWALL L.M.I.

Sheet No. 36/61

mporatusic – 26/Oct/11 9:50 AM

NOTE:

SEE DETAIL 1/36 FOR TYPICAL NOTES AND INFORMATION

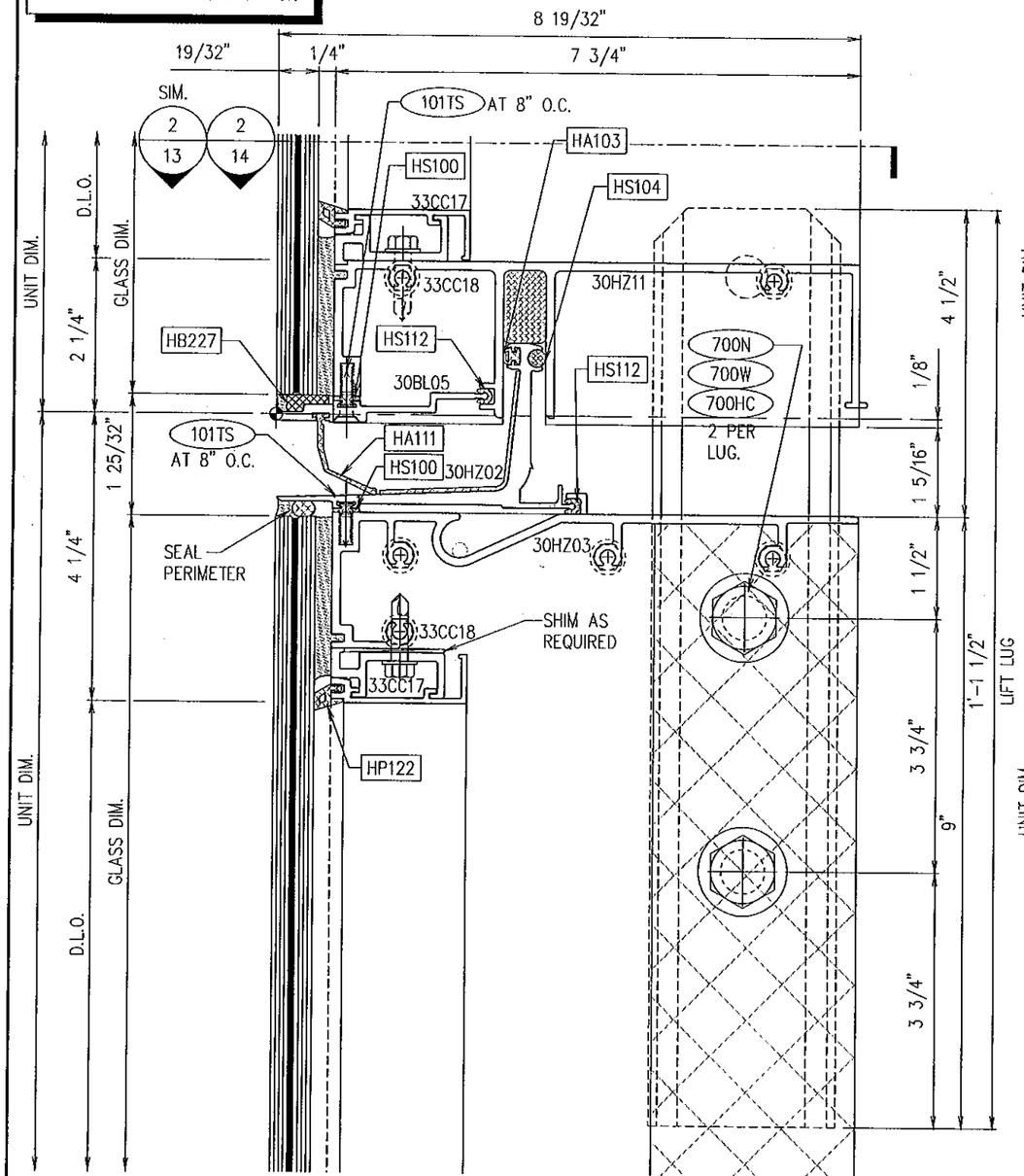

1 / 37 STACK JOINT – WITHOUT COVER

Scale: FULL AT VISION AND SPANDREL

NOTE:

SEE DETAIL 2/36 FOR TYPICAL NOTES AND INFORMATION

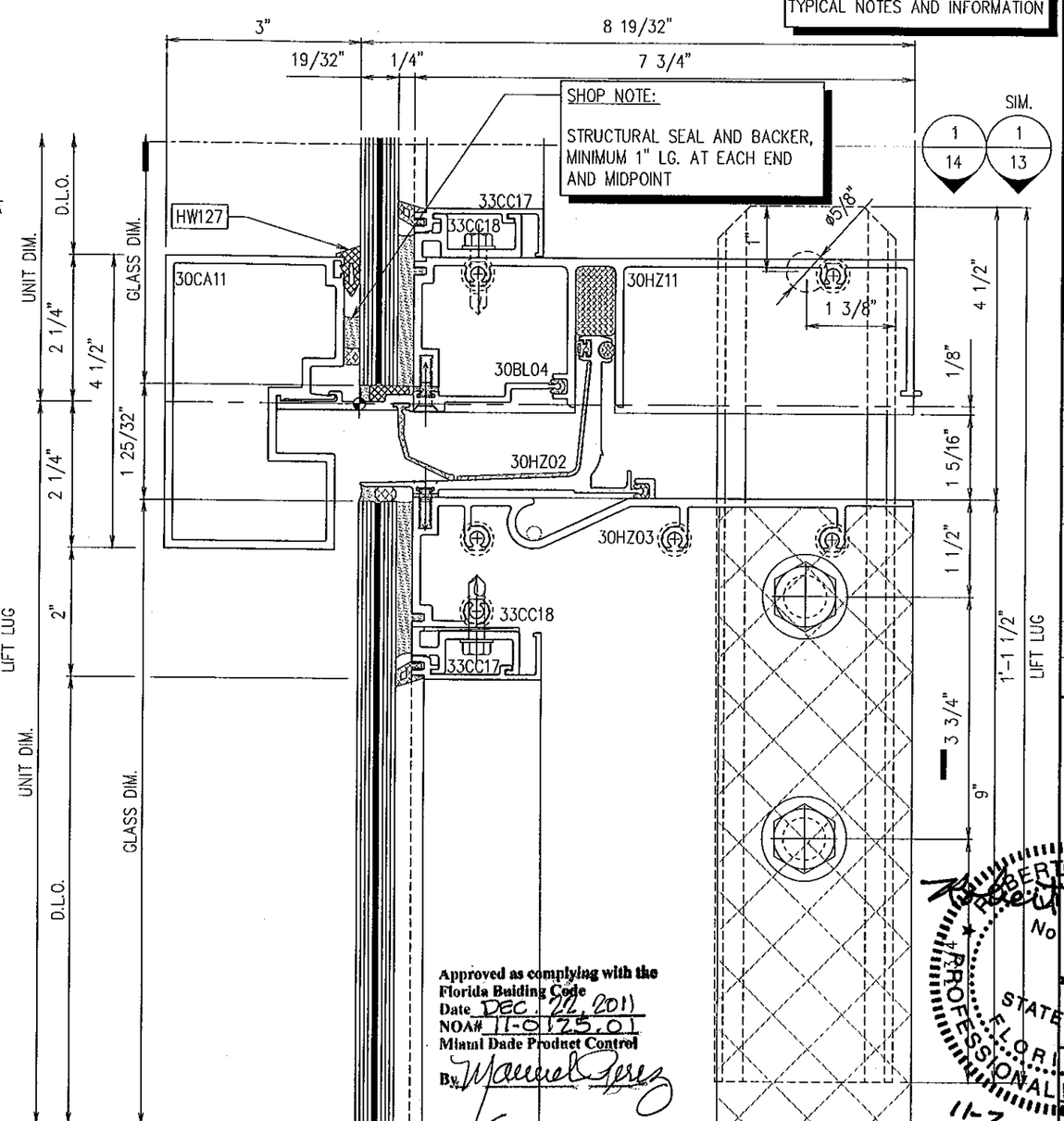

Approved as complying with the Florida Building Code
Date DEC. 22, 2011
NOA# 11-0125.01
Miami Dade Product Control
By Manuel Perez

2 / 37 STACK JOINT – WITH COVER

Scale: FULL AT VISION AND SPANDREL

NOTE:

CC17 & CC18 ALONG WITH THE ADDED SEALANT BITE ARE FOR HIGH WIND ZONE AREAS AND WILL BE REQUIRED ON A PER JOB BASIS.

enclos corp
2770 Blue Water Rd.
Eagan, MN 55121
Tel. 651-796-6100
Fax 651-994-6360

Sub. No.	Rev. No.	Date	Drawn By	Submittal/Revision Description
1	–	24 SEP 10	WPB	1ST SUBMITTAL

ROBERT D. McCAULEY
PE 68037
ENCLOS CORP
2770 BLUE WATER RD.
EAGAN, MN 55121
COA 28468

Reviewed For Structural Integrity Only

ROBERT D. McCAULEY LICENSE No 68037 STATE OF FLORIDA PROFESSIONAL ENGINEER

11-2-11

Date 06 APR 10 | Scale FULL

Project No. 7545 – L.M.I.

Drawing Title

HORIZONTAL DETAILS
7545 SERIES
CURTAINWALL L.M.I.

Sheet No. 37/61

mparatusic – 26/Oct/11 9:51 AM

SHOP NOTE:

STRUCTURAL SEAL & BACKER MINIMUM 1" LG. AT EACH END AND MIDPOINT

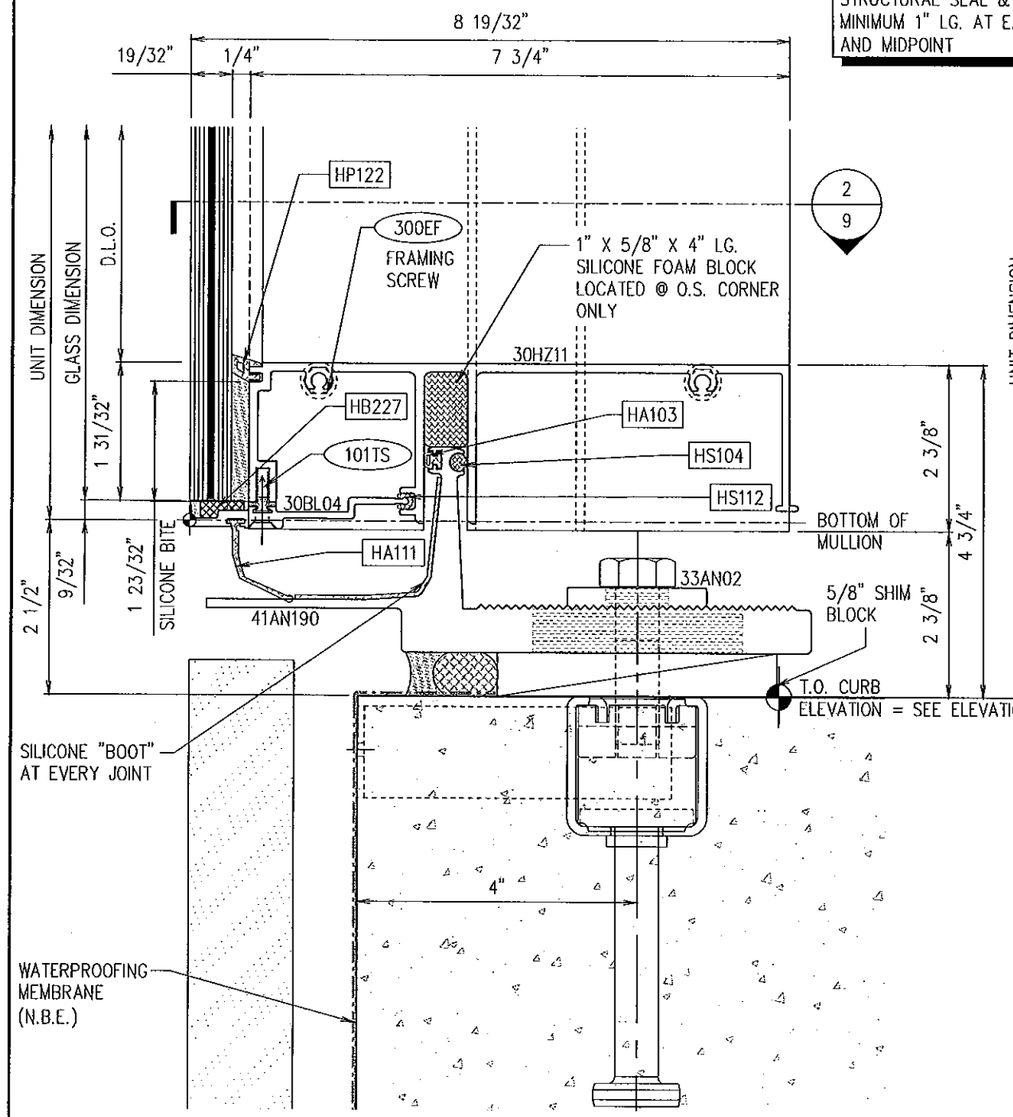

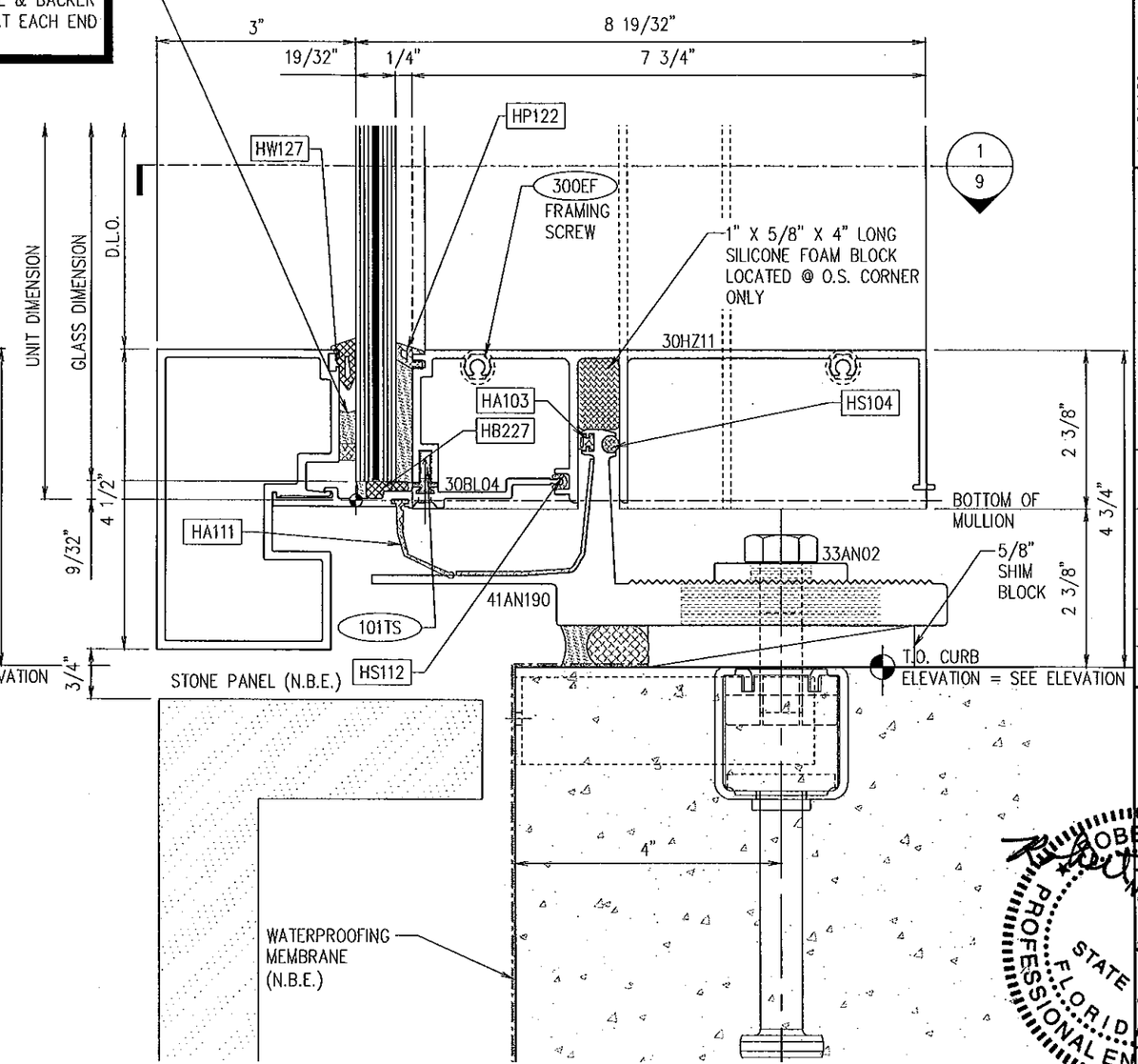

1 / 38 STARTER SILL W/O COVERS

Scale: FULL SIZE

FIELD NOTE:

3/4" MIN. JOINT BETWEEN BOTTOM OF HORIZONTAL COVER AND TOP OF STONE MUST BE MAINTAINED TO ALLOW FOR ANTICIPATED MOVEMENT IN CURTAINWALL SYSTEM

2 / 38 STARTER SILL @ CURB W/ COVERS

Scale: FULL SIZE

Approved as complying with the Florida Building Code
Date Dec. 22 2011
NOA# 11-0125.01
Miami Dade Product Control
By Manuel Perez

enclos corp
2770 Blue Water Rd.
Eagan, MN 55121
Tel. 651-796-6100
Fax 651-994-6360

No.	Sub. No.	Date	Drawn By	Description
	1	24 SEP 10	REY	1ST SUBMITTAL

ROBERT D. McCAULEY
PE 68037
ENCLOS CORP
2770 BLUE WATER RD.
EAGAN, MN 55121
COA 28468

Reviewed for Structural Integrity Only

ROBERT D. McCAULEY LICENSE No 68037 STATE OF FLORIDA PROFESSIONAL ENGINEER

11-2-11

Date	Scale
01 APR 10	FULL

Project No.
7545 - L.M.I.

Drawing Title

SILL DETAILS
7545 SERIES
CURTAINWALL L.M.I.

Sheet No.
38/61

mperotusic - 26/Oct/11 9:51 AM

FIELD NOTE:

1" MIN. JOINT BETWEEN BOTTOM OF ALUM. COVER AND TOP OF STONE MUST BE MAINTAINED TO ALLOW FOR ANTICIPATED MOVEMENT IN CURTAINWALL SYSTEM

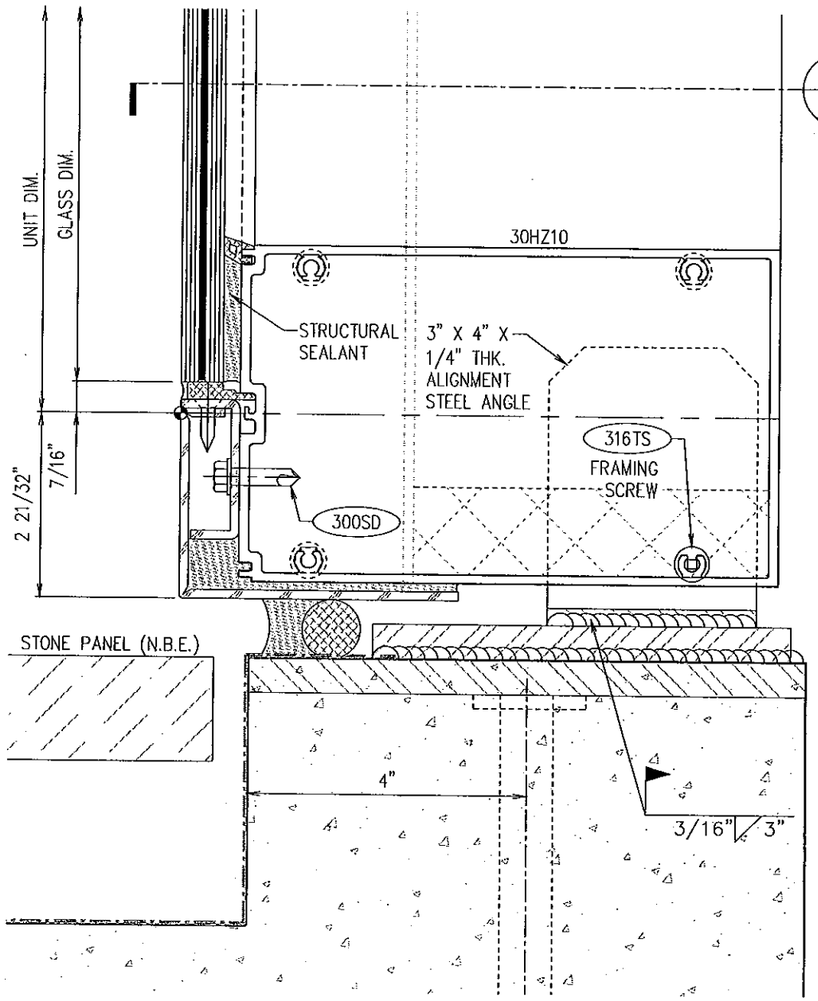

1 STARTER SILL W/O COVERS
39
Scale: FULL SIZE

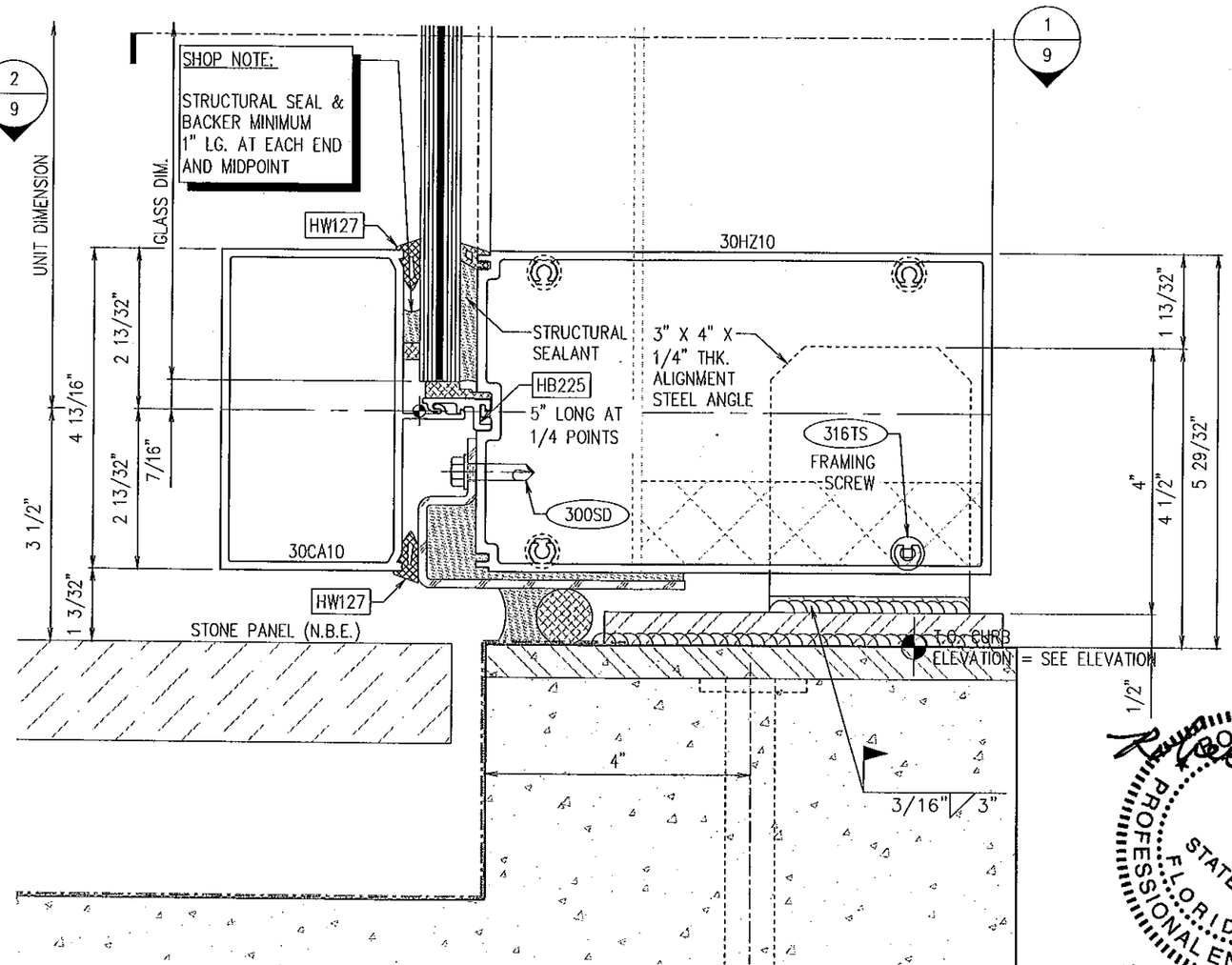

2 STARTER SILL W/ COVERS
39
Scale: FULL SIZE

Approved as complying with the Florida Building Code
Date DEC. 22, 2011
NOA# 11-0125.01
Miami Dade Product Control
By Manuel Perez

enclos corp
2770 Blue Water Rd.
Eagan, MN 55121
Tel. 651-796-6100
Fax 651-994-6360

Sub. No.	Rev. No.	Date	Drawn By	Submittal/Revision Description
1	-	24 SEP 10	REY	1ST SUBMITTAL

ROBERT D. McCAULEY
PE 68037
ENCLOS CORP
2770 BLUE WATER RD.
EAGAN, MN 55121
604 28468

Reviewed For Structural Integrity Only

ROBERT D. McCAULEY
LICENSE
No 68037
STATE OF FLORIDA
PROFESSIONAL ENGINEER
11-2-11

Date	Scale
07 APR 10	FULL

Project No.
7545 - L.M.I.

Drawing Title
SILL DETAILS
7545 SERIES
CURTAINWALL L.M.I.

Sheet No.
39/61

mparatusic - 26/Oct/11 9:52 AM

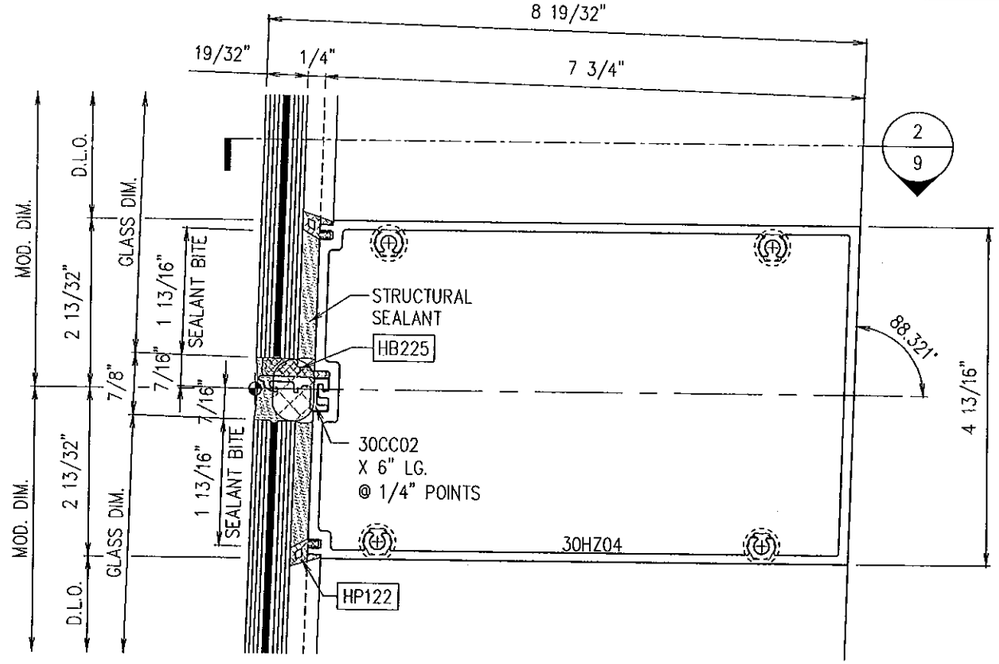

1 / 40 INSLOPE HORIZONTAL @ VISION W/O COVER

Scale: FULL

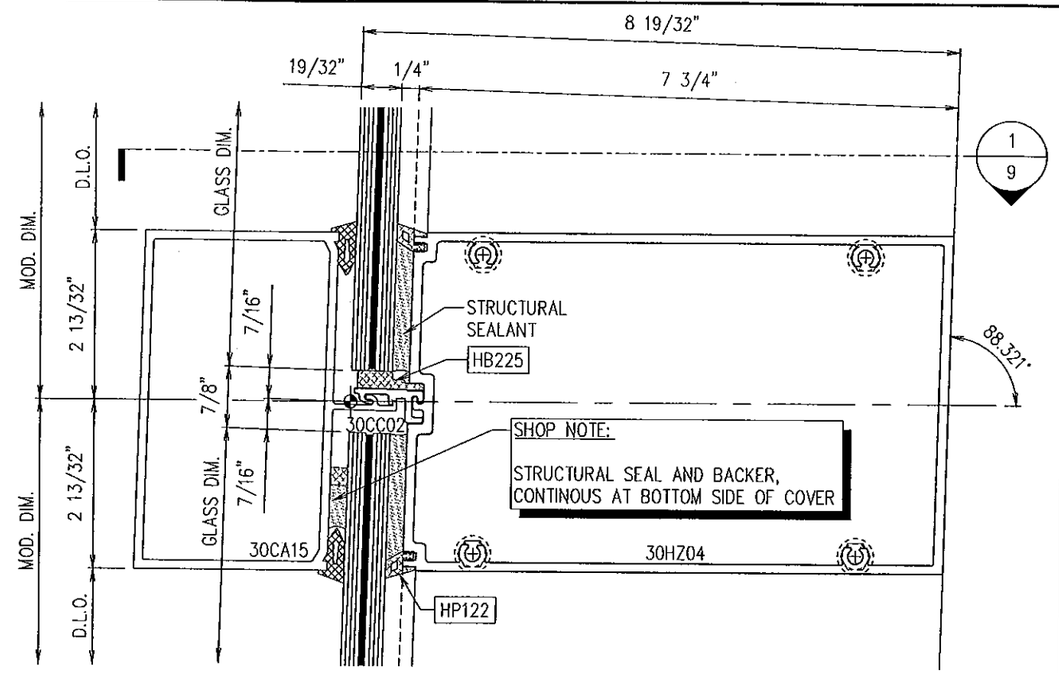

2 / 40 INSLOPE HORIZONTAL @ VISION W/ COVER

Scale: FULL

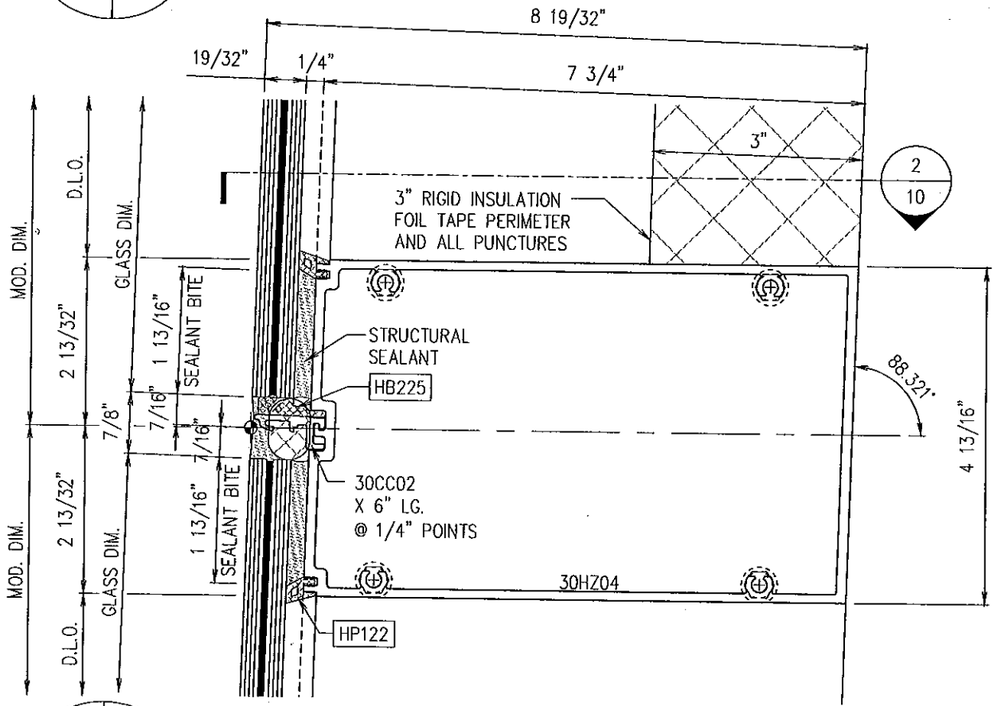

3 / 40 INSLOPE HORIZONTAL @ SPANDREL W/O COVER

Scale: FULL

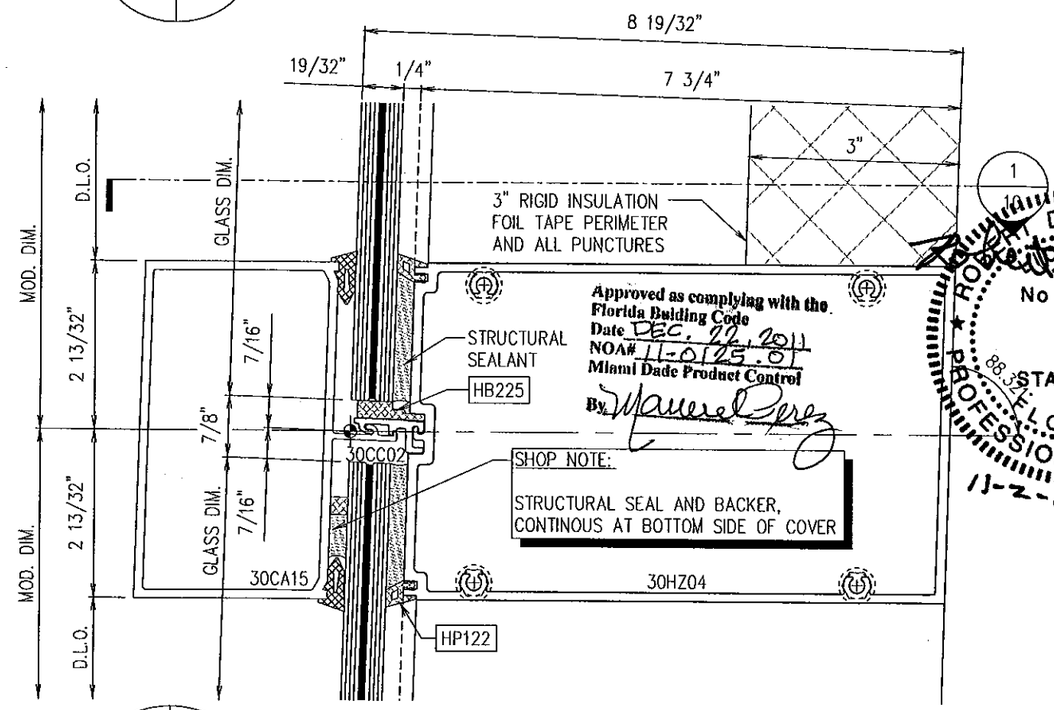

Approved as complying with the Florida Building Code
Date DEC. 22, 2011
NOA# 11-0125.01
Miami Dade Product Control
By Maurel Perez

4 / 40 INSLOPE HORIZONTAL @ SPANDREL W/ COVER

Scale: FULL

enclos corp®
2770 Blue Water Rd.
Eagan, MN 55121
Tel. 651-796-6100
Fax 651-994-6360

No.	Sub Rev.	Date	Drawn By	Submittal/Revision Description
1	–	24 SEP 10	WPB	1ST SUBMITTAL

ROBERT D. McCAULEY
PE 68037
ENCLOS CORP
2770 BLUE WATER RD.
EAGAN, MN 55121
NOA: 28468

Reviewed for Structural Integrity Only

ROBERT D. McCAULEY No 68037 STATE OF FLORIDA PROFESSIONAL ENGINEER

11-2-11

Date: 07 APR 10

Scale: FULL

Project No. 7545 – L.M.I.

Drawing Title

HORIZONTAL DETAILS
7545 SERIES
CURTAINWALL L.M.I.

Sheet No. 40/61

mporatusic – 26/Oct/11 9:53 AM

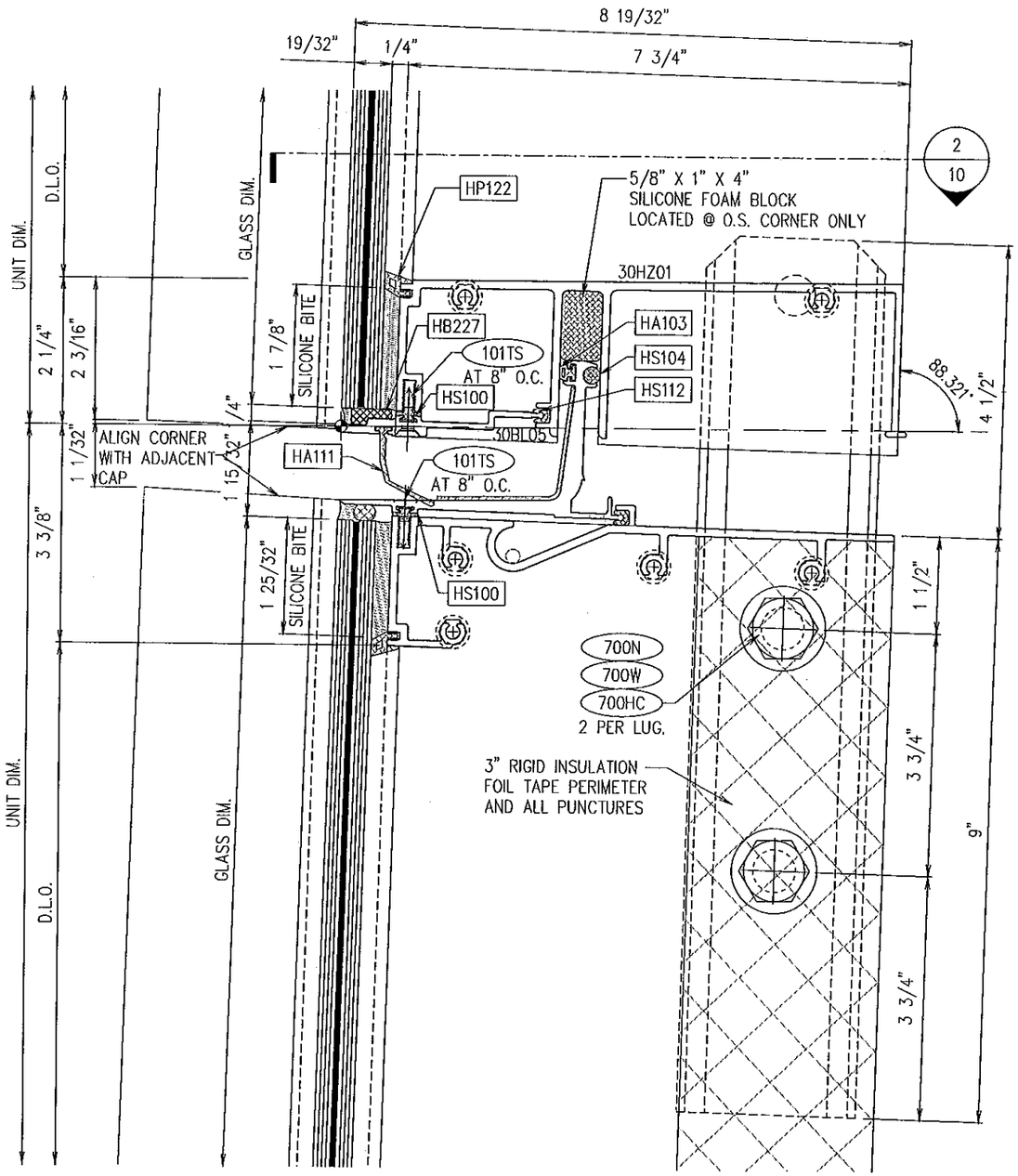

1 / 41 STACK JOINT @ 88.321° SLOPED WALL W/O COVER

Scale: FULL

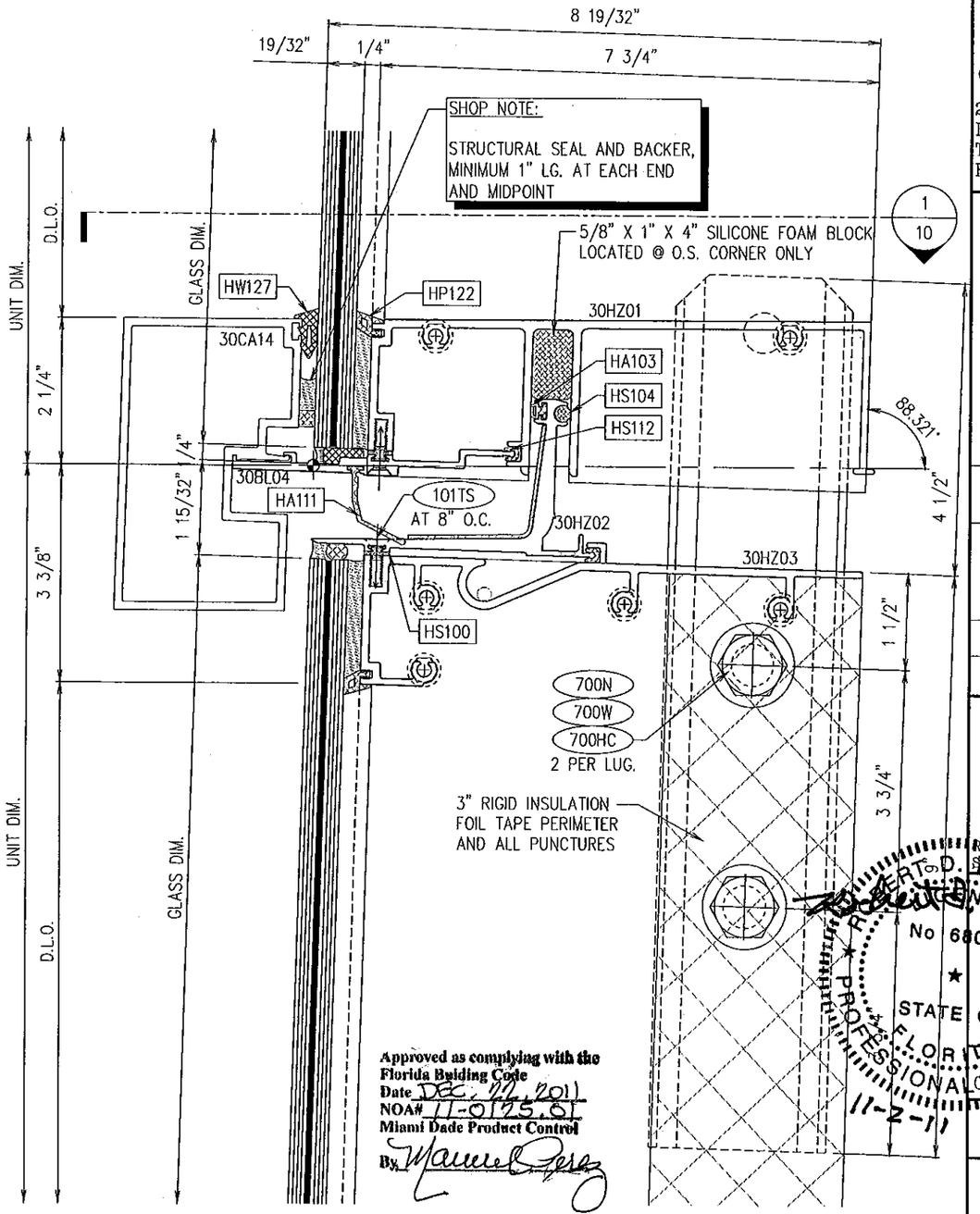

Approved as complying with the
Florida Building Code
Date DEC. 22, 2011
NOA# 11-0125.01
Miami Dade Product Control
By Manuel Perez

2 / 41 STACK JOINT @ 88.321° SLOPED WALL W/ COVER

Scale: FULL

enclos corp
2770 Blue Water Rd.
Eagan, MN 55121
Tel. 651-796-6100
Fax 651-994-6360

Sub. No.	Rev. No.	Date	Drawn By	Submittal/Revision Description
1	-	24 SEP 10	WPB	1ST SUBMITTAL

ROBERT D. McCAULEY
PE 68037
ENCLOS CORP
2770 BLUE WATER RD.
EAGAN, MN 55121
COA 28468

Reviewed For
Structural Integrity Only

ROBERT D. McCAULEY
No 68037
STATE OF FLORIDA
PROFESSIONAL ENGINEER
11-2-11

Date 06 APR 10

Scale FULL

Project No.
7545 - L.M.I.

Drawing Title

HORIZONTAL DETAILS
7545 SERIES
CURTAINWALL L.M.I.

Sheet No.
41/61

mporatusle - 26/Oct/11 9:54 AM

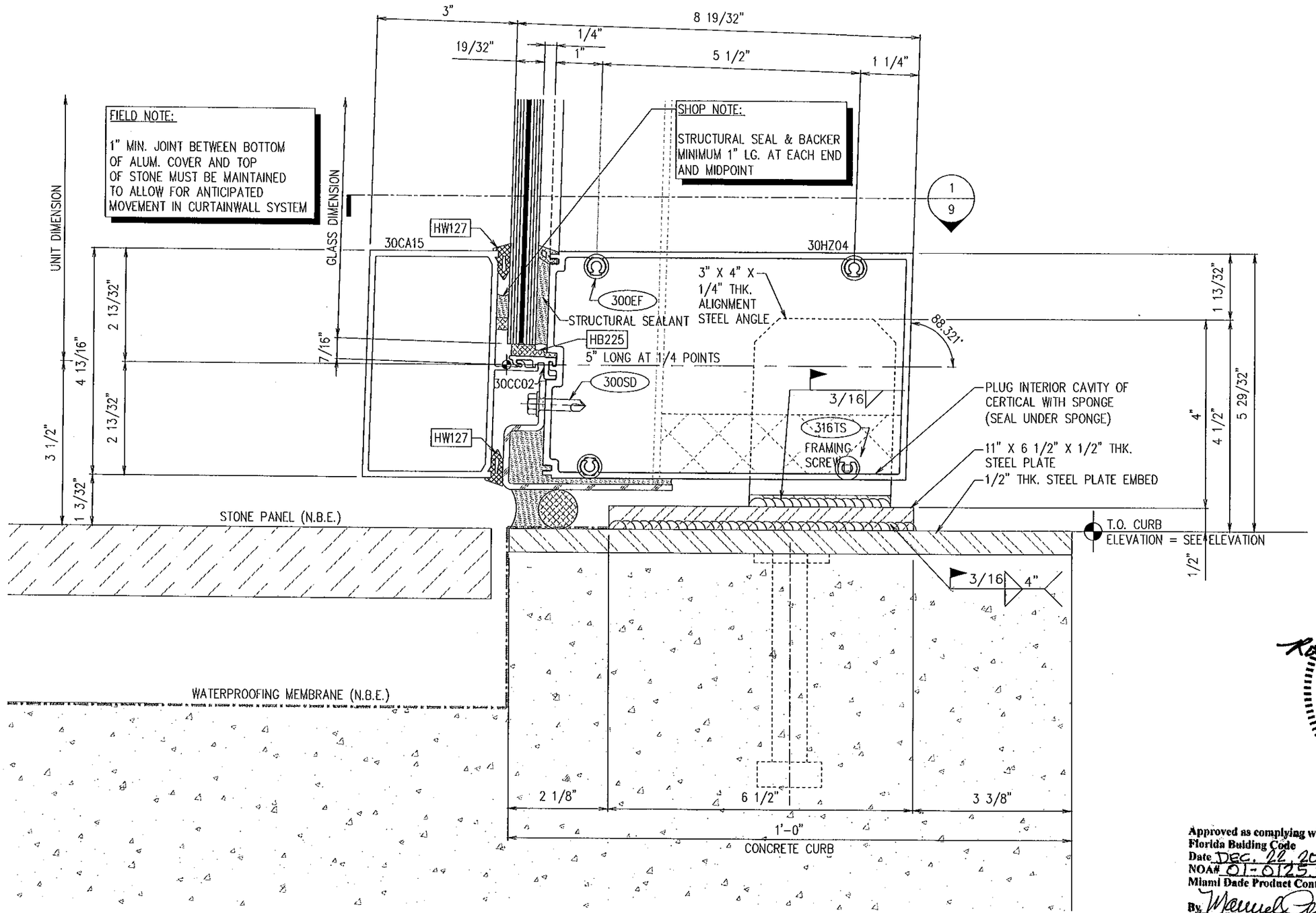

1 / 42 STARTER SILL DETAIL AT 88.321° INSLOPE W/ COVER

Scale: FULL SIZE

Approved as complying with the Florida Building Code
Date DEC. 22, 2011
NOA# 01-0125.01
Miami Dade Product Control
By

enclos corp
2770 Blue Water Rd.
Eagan, MN 55121
Tel. 651-796-6100
Fax 651-994-6360

Sub. No.	Rev. No.	Date	Drawn By	Submittal/Revision Description
1	-	24 SEP 10	REY	1ST SUBMITTAL

ROBERT D. McCAULEY
PE 68037
ENCLOS CORP
2770 BLUE WATER RD.
EAGAN, MN 55121
COA 28468

Reviewed For Structural Integrity Only

ROBERT D. McCAULEY LICENSED No 68037 STATE OF FLORIDA PROFESSIONAL ENGINEER

11-2-11

Date	Scale
06 APR 10	FULL

Project No.
7545 - L.M.I.

Drawing Title
SILL DETAILS
7545 SERIES
CURTAINWALL L.M.I.

Sheet No.
42/61

mporatusic - 26/Oct/11 9:54 AM

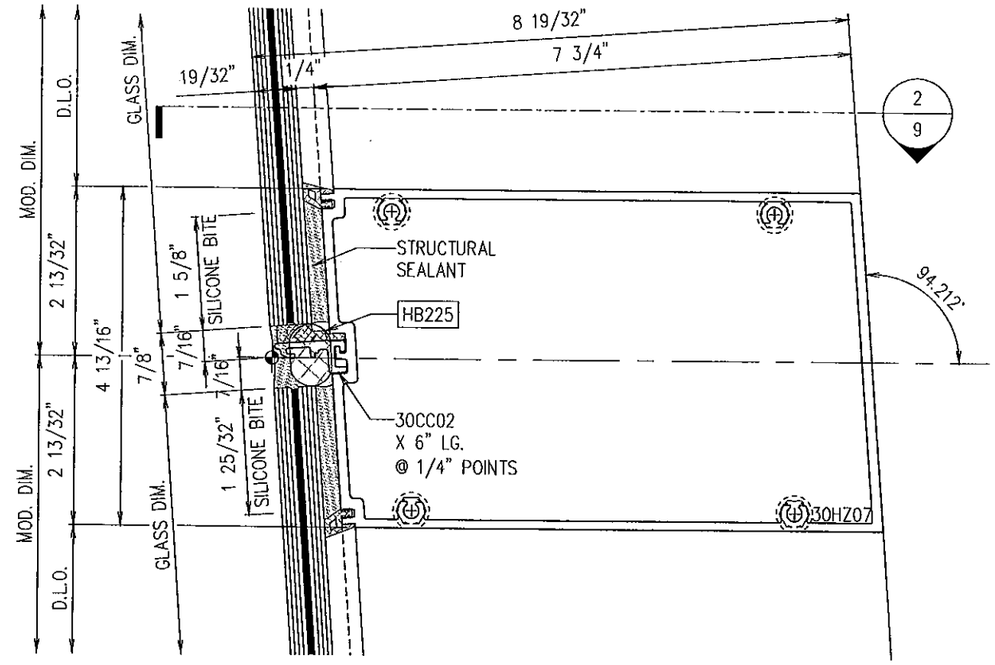

1 / 43 OUTSLOPE HORIZONTAL @ VISION W/O COVER

Scale: FULL

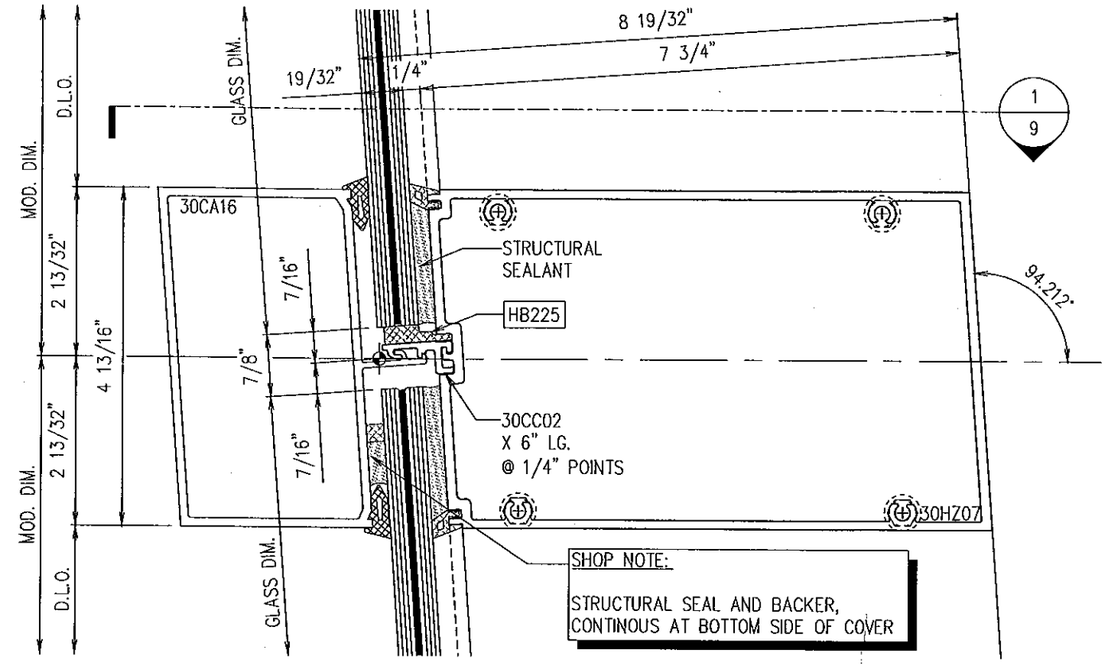

2 / 43 OUTSLOPE HORIZONTAL @ VISION W/ COVER

Scale: FULL

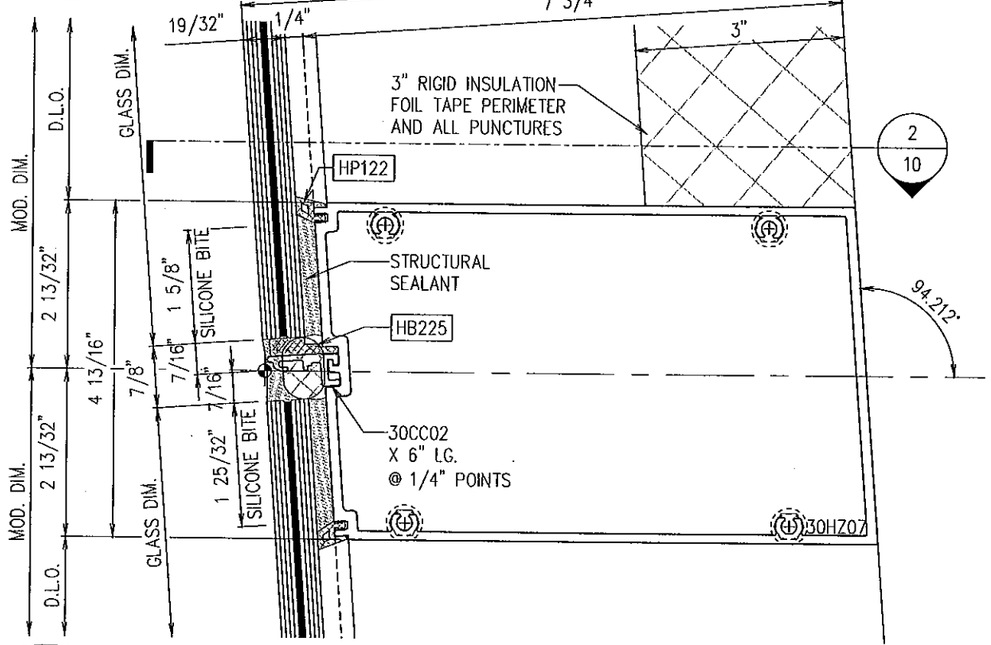

3 / 43 OUTSLOPE HORIZONTAL @ SPANDREL W/O COVER

Scale: FULL

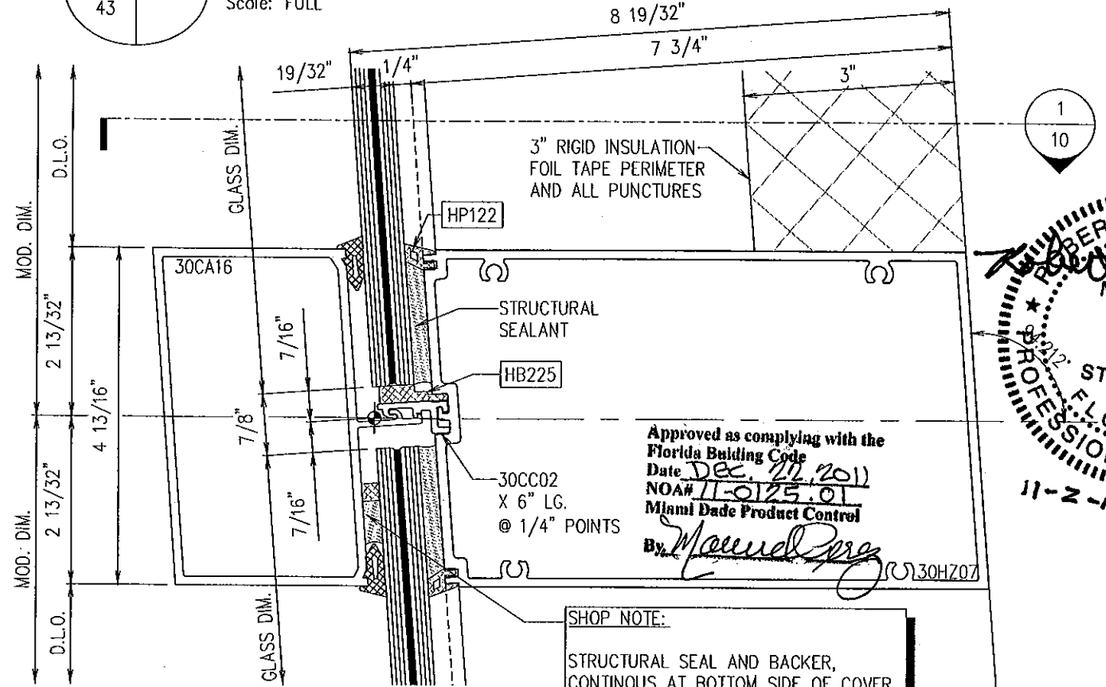

4 / 43 OUTSLOPE HORIZONTAL @ SPANDREL W/ COVER

Scale: FULL

enclos corp
2770 Blue Water Rd.
Eagan, MN 55121
Tel. 651-796-6100
Fax 651-994-6360

No.	Sub. No.	Rev.	Date	Drawn By	Submittal/Revision Description
	1	-	24 SEP 10	WPB	1ST SUBMITTAL

ROBERT D. McCAULEY
PE 68037
ENCLOS CORP
2770 BLUE WATER RD.
EAGAN, MN 55121
COA 28468

Reviewed for Structural Adequacy Only

ROBERT D. McCAULEY No 68037 STATE OF FLORIDA PROFESSIONAL ENGINEER

11-2-11

Scale FULL

Project No. 7545 - L.M.I.

Drawing Title

HORIZONTAL DETAILS
7545 SERIES
CURTAINWALL L.M.I.

Sheet No. 43/61

mporoluslc - 26/Oct/11 9:55 AM

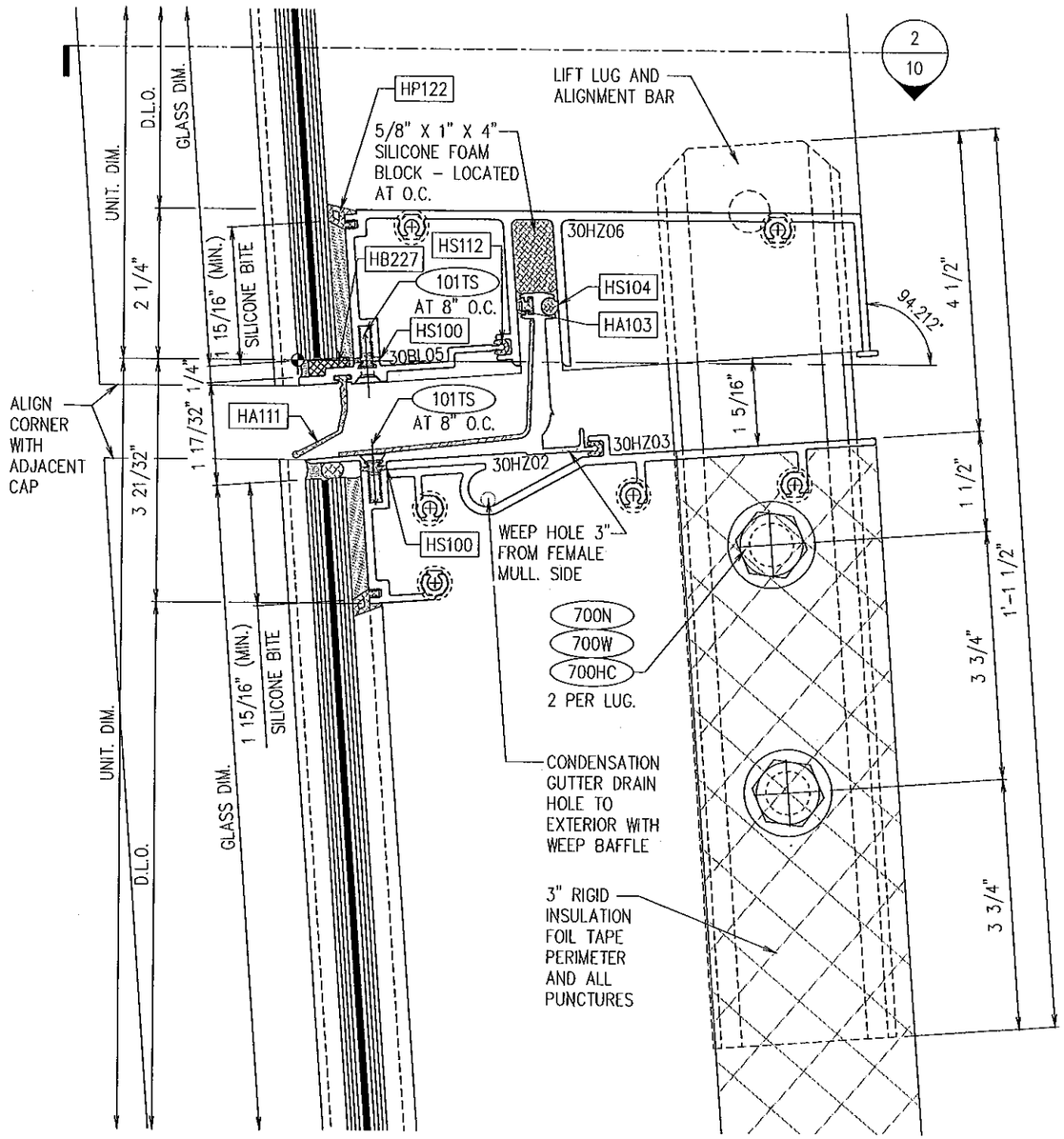

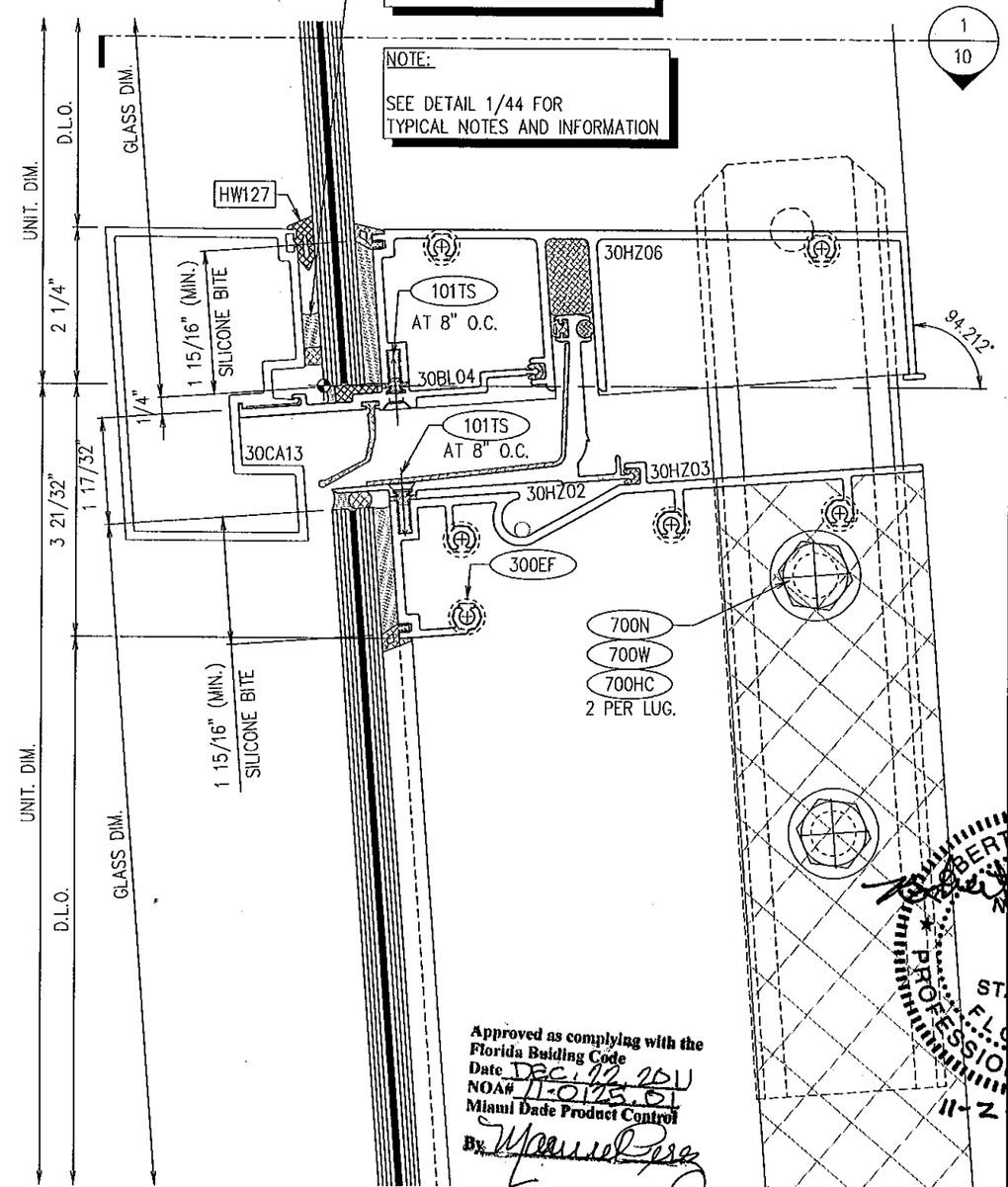

1 / 44 STACK JOINT @ OUTSLOPE 94.212° W/O COVER

Scale: FULL

2 / 44 STACK JOINT @ OUTSLOPE 94.212° W/ COVER

Scale: FULL

Approved as complying with the Florida Building Code
Date Dec. 22, 2011
NOA# 11-0125.01
Miami Dade Product Control
By Maurice Perez

enclos corp
2770 Blue Water Rd.
Eagan, MN 55121
Tel. 651-796-6100
Fax 651-994-6360

Sub. No.	Rev. No.	Date	Drawn By	Submittal/Revision Description
1	-	24 SEP 10	WPB	1ST SUBMITTAL

ROBERT D. McCAULEY
PE 68037
ENCLOS CORP
2770 BLUE WATER RD.
EAGAN, MN 55121
COA 28468

Reviewed for Structural Integrity Only

ROBERT D. McCAULEY LICENSE No 68037 STATE OF FLORIDA PROFESSIONAL ENGINEER

11-2-11

Date 06 APR 2011

Scale FULL

Project No. 7545 - L.M.I.

Drawing Title

HORIZONTAL DETAILS
7545 SERIES
CURTAINWALL L.M.I.

Sheet No. 44/61

mparatusic - 26/Oct/11 9:56 AM

FIELD NOTE:

1" MIN. JOINT BETWEEN BOTTOM OF ALUM. COVER AND TOP OF STONE MUST BE MAINTAINED TO ALLOW FOR ANTICIPATED MOVEMENT IN CURTAINWALL SYSTEM

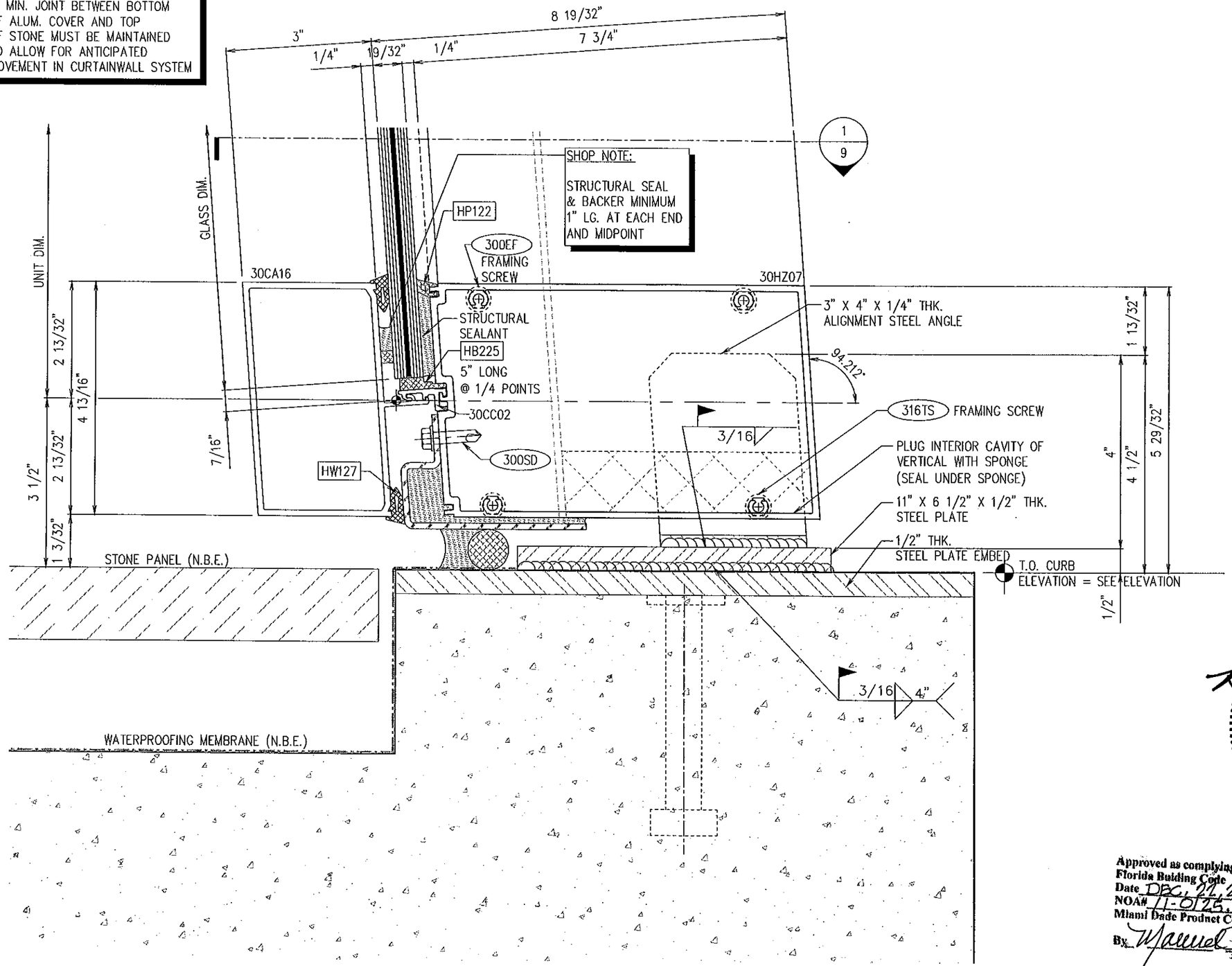

1 / 45 STARTER SILL DETAIL AT 94.212° OUTSLOPE W/ COVER

Scale: FULL SIZE

Approved as complying with the Florida Building Code
Date DEC. 22, 2011
NOA# 11-0125.01
Miami Dade Product Control
By Manuel Pore

enclos corp
2770 Blue Water Rd.
Eagan, MN 55121
Tel. 651-796-6100
Fax 651-994-6360

Sub. No.	Rev. No.	Date	Drawn By	Submittal/Revision Description
1	–	24 SEP 10	REY	1ST SUBMITTAL

ROBERT D. McCAULEY
PE 68037
ENCLOS CORP
2770 BLUE WATER RD.
EAGAN, MN 55121
COA 28468

Reviewed for Structural Integrity Only

ROBERT D. McCAULEY LICENSE No 68037 STATE OF FLORIDA PROFESSIONAL ENGINEER

11-2-11

Date	Scale
06 APR 10	FULL

Project No.
7545 – L.M.I.

Drawing Title
SILL DETAILS
7545 SERIES
CURTAINWALL L.M.I.

Sheet No.
45/61

mporotusic – 28/Oct/11 9:57 AM

MAXIMUM DESIGN PRESSURES (P.S.F.) F.O.S. ANCHOR		
MODULE WIDTH	MULLION HEIGHT (L)	FACE OF SLAB ANCHOR
	18'-10"	
6'-0"		+/-94
5'-9"		+/-98
5'-6"		+/-102
5'-0"		+/-112
4'-9"		+113/-118
4'-6"		+113/-125
4'-3"		+113/-130.5
4'-0"		+113/-130.5
	17'-6 1/4"	
6'-0"		+/-101
5'-9"		+/-105
5'-6"		+/-110
5'-0"		+113/-121
4'-9"		+113/-127
4'-6"		+113/-130.5
4'-3"		+113/-130.5
4'-0"		+113/-130.5
	16'-6"	
6'-0"		+/-107
5'-9"		+/-112
5'-6"		+113/-117
5'-0"		+113/-128
4'-9"		+113/-130.5
4'-6"		+113/-130.5
4'-3"		+113/-130.5
4'-0"		+113/-130.5
	15'-6"	
6'-0"		+113/-114
5'-9"		+113/-119
5'-6"		+113/-124
5'-0"		+113/-130.5
4'-9"		+113/-130.5
4'-6"		+113/-130.5
4'-3"		+113/-130.5
4'-0"		+113/-130.5
	14'-6"	
6'-0"		+113/-122
5'-9"		+113/-127
5'-6"		+113/-130.5
5'-0"		+113/-130.5
4'-9"		+113/-130.5
4'-6"		+113/-130.5
4'-3"		+113/-130.5
4'-0"		+113/-130.5

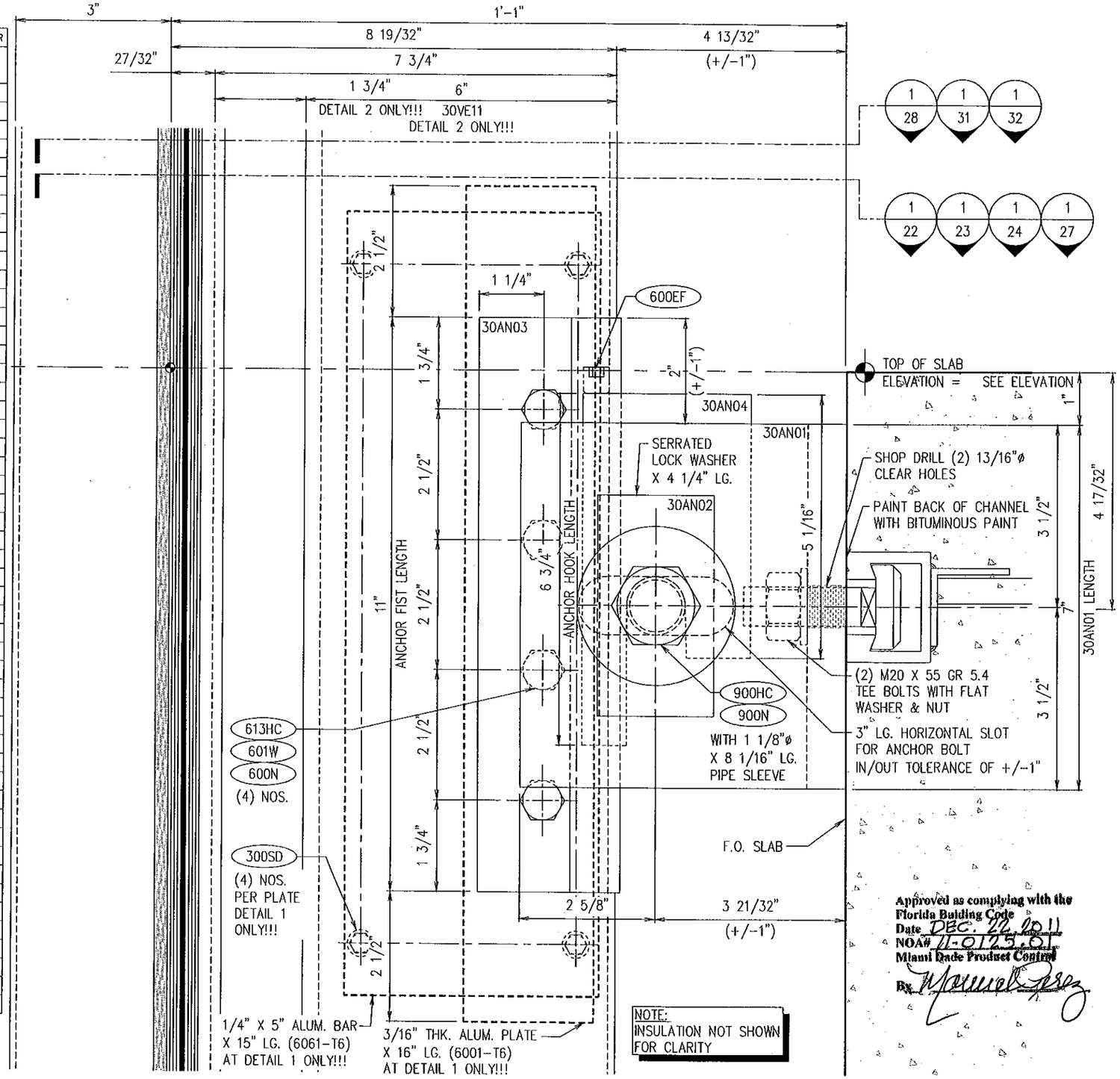

Approved as complying with the
Florida Building Code
Date DEC. 22, 2011
NOA# 11-0125.01
Miami Dade Product Control
By Manuel Perez

MAXIMUM DESIGN PRESSURES (P.S.F.) F.O.S. ANCHOR		
MODULE WIDTH	MULLION HEIGHT (L)	FACE OF SLAB ANCHOR
	13'-6"	
6'-0"		+113/-130.5
5'-9"		+113/-130.5
5'-6"		+113/-130.5
5'-0"		+113/-130.5
4'-9"		+113/-130.5
4'-6"		+113/-130.5
4'-3"		+113/-130.5
4'-0"		+113/-130.5
	12'-6"	
6'-0"		+113/-130.5
5'-9"		+113/-130.5
5'-6"		+113/-130.5
5'-0"		+113/-130.5
4'-9"		+113/-130.5
4'-6"		+113/-130.5
4'-3"		+113/-130.5
4'-0"		+113/-130.5
	11'-6"	
6'-0"		+113/-130.5
5'-9"		+113/-130.5
5'-6"		+113/-130.5
5'-0"		+113/-130.5
4'-9"		+113/-130.5
4'-6"		+113/-130.5
4'-3"		+113/-130.5
4'-0"		+113/-130.5
	10'-6"	
6'-0"		+113/-130.5
5'-9"		+113/-130.5
5'-6"		+113/-130.5
5'-0"		+113/-130.5
4'-9"		+113/-130.5
4'-6"		+113/-130.5
4'-3"		+113/-130.5
4'-0"		+113/-130.5
	10'-0"	
6'-0"		+113/-130.5
5'-9"		+113/-130.5
5'-6"		+113/-130.5
5'-0"		+113/-130.5
4'-9"		+113/-130.5
4'-6"		+113/-130.5
4'-3"		+113/-130.5
4'-0"		+113/-130.5

1 — 46 — DEADLOAD F.O. SLAB ANCHOR @ SPLIT MULLION
Scale: FULL
WITH 1/4" THK AND 3/16" THK PLATE

2 — 46 — DEADLOAD F.O. SLAB ANCHOR @ STUB MULLION
Scale: FULL

enclos corp
2770 Blue Water Rd.
Eagan, MN 55121
Tel. 651-796-6100
Fax 651-994-6360

No.	Sub. Rev. No.	Date	Drawn By	Description
1	–	24 SEP 10	MGD	1ST SUBMITTAL

ROBERT D. McCAULEY
PE 68037
ENCLOS CORP
2770 BLUE WATER RD.
EAGAN, MN 55121
COA 28468

Reviewed for Structural Adequacy Only
ROBERT D. McCAULEY No 68037 STATE OF FLORIDA PROFESSIONAL ENGINEER
11-2-11

Date: 07/11/11
Scale: FULL

Project No.
7545 – L.M.I.

Drawing Title
ANCHOR DETAIL
7545 SERIES
CURTAINWALL L.M.I.

Sheet No.
46/61

mporatusic – 26/Oct/11 9:58 AM

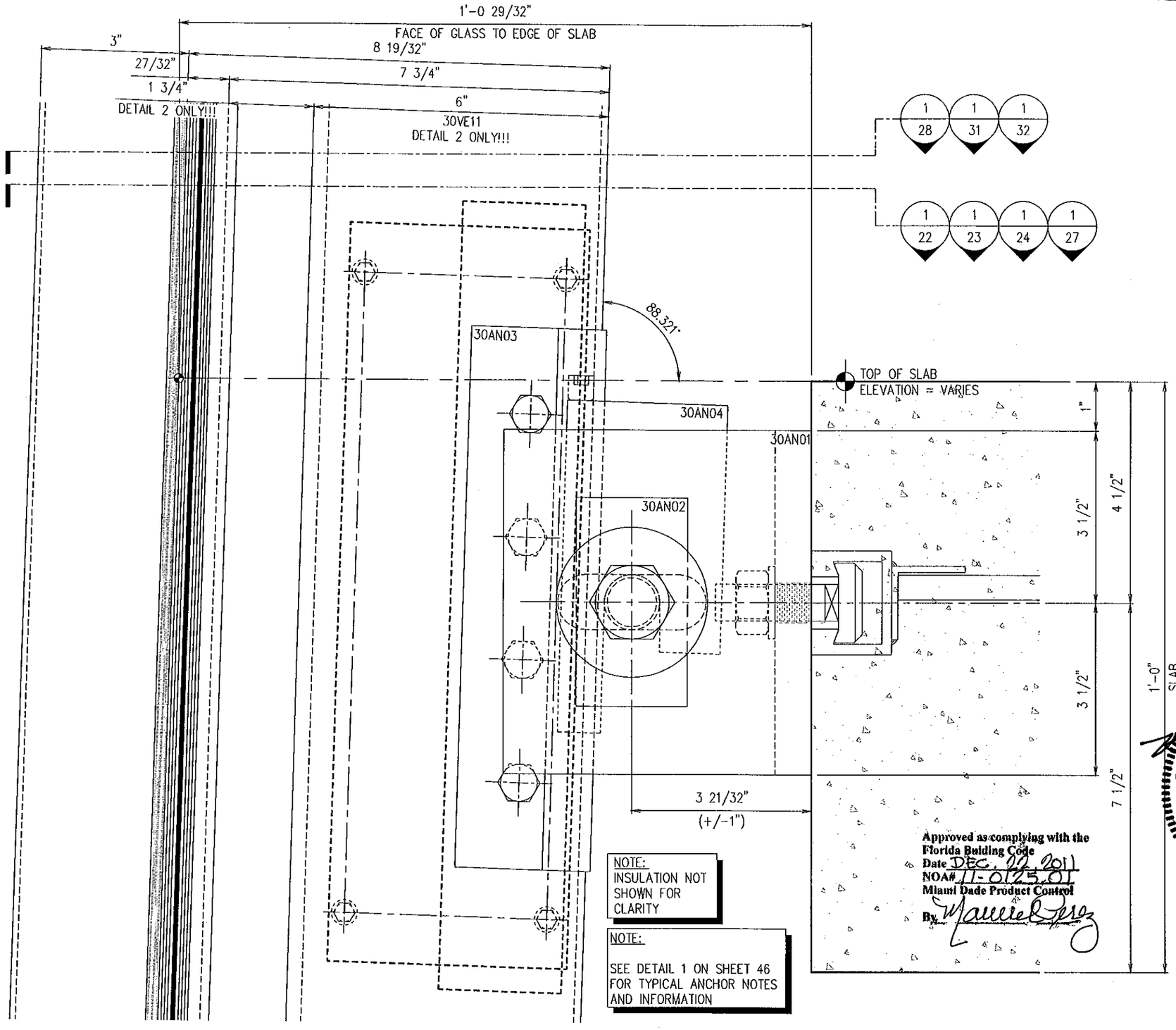

1 – 47 – DEADLOAD ANCHOR @ SPLIT MULLION

Scale: FULL WITH 1/4" THK AND 3/16" THK PLATE

2 – 47 – DEADLOAD ANCHOR @ STUB MULLION

Scale: FULL

enclos corp
2770 Blue Water Rd.
Eagan, MN 55121
Tel. 651-796-6100
Fax 651-994-6360

No.	Sub.Rev. No.	Date	Drawn By	Description
1	–	24 SEP 10	WPB	1ST SUBMITTAL

ROBERT D. McCAULEY
PE 68037
ENCLOS CORP
2770 BLUE WATER RD.
EAGAN, MN 55121
COA 28468

Moved Structural Integrity Only

ROBERT D. McCAULEY No 68037 STATE OF FLORIDA PROFESSIONAL ENGINEER

11-2-11

Date 24 SEP 10 | Scale FULL

Project No. 7545 – L.M.I.

Drawing Title

ANCHOR DETAILS
7545 SERIES
CURTAINWALL L.M.I.

Sheet No. 47/61

mparalusk – 26/Oct/11 10:00 AM

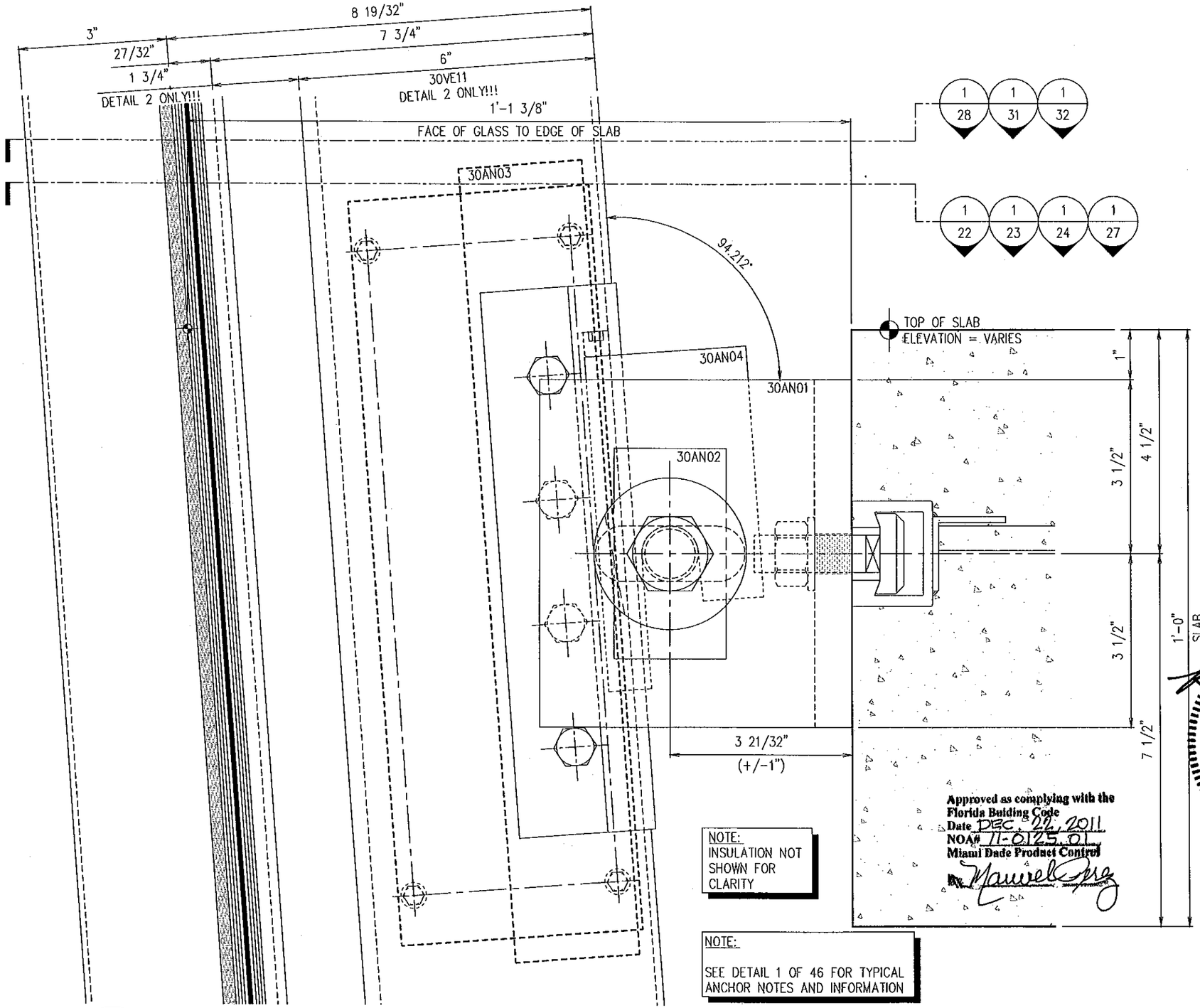

NOTE:
INSULATION NOT SHOWN FOR CLARITY

NOTE:
SEE DETAIL 1 OF 46 FOR TYPICAL ANCHOR NOTES AND INFORMATION

Approved as complying with the Florida Building Code
Date DEC. 22, 2011
NOA# 11-0125.01
Miami Dade Product Control
By Manuel Perez

1 – / 48 – DEADLOAD ANCHOR @ SPLIT MULLION
Scale: FULL WITH 1/4" THK AND 3/16" THK PLATE

2 – / 48 – DEADLOAD ANCHOR @ STUB MULLION
Scale: FULL

enclos corp
2770 Blue Water Rd.
Eagan, MN 55121
Tel. 651-796-6100
Fax 651-994-6360

Sub. No.	Rev. No.	Date	Drawn By	Submittal/Revision Description
1	–	24 SEP 10	WPB	1ST SUBMITTAL

ROBERT D. McCAULEY
PE 68037
ENCLOS CORP
2770 BLUE WATER RD.
EAGAN, MN 55121
COA 28468

Reviewed for Structural Integrity Only

ROBERT D. McCAULEY LICENSED No 68037 STATE OF FLORIDA PROFESSIONAL ENGINEER
11-2-11

Date	Scale
08 APR 10	FULL

Project No.
7545 – L.M.I.

Drawing Title
ANCHOR DETAILS
7545 SERIES
CURTAINWALL L.M.I.

Sheet No.
48/61

mparatusic – 28/Oct/11 10:01 AM

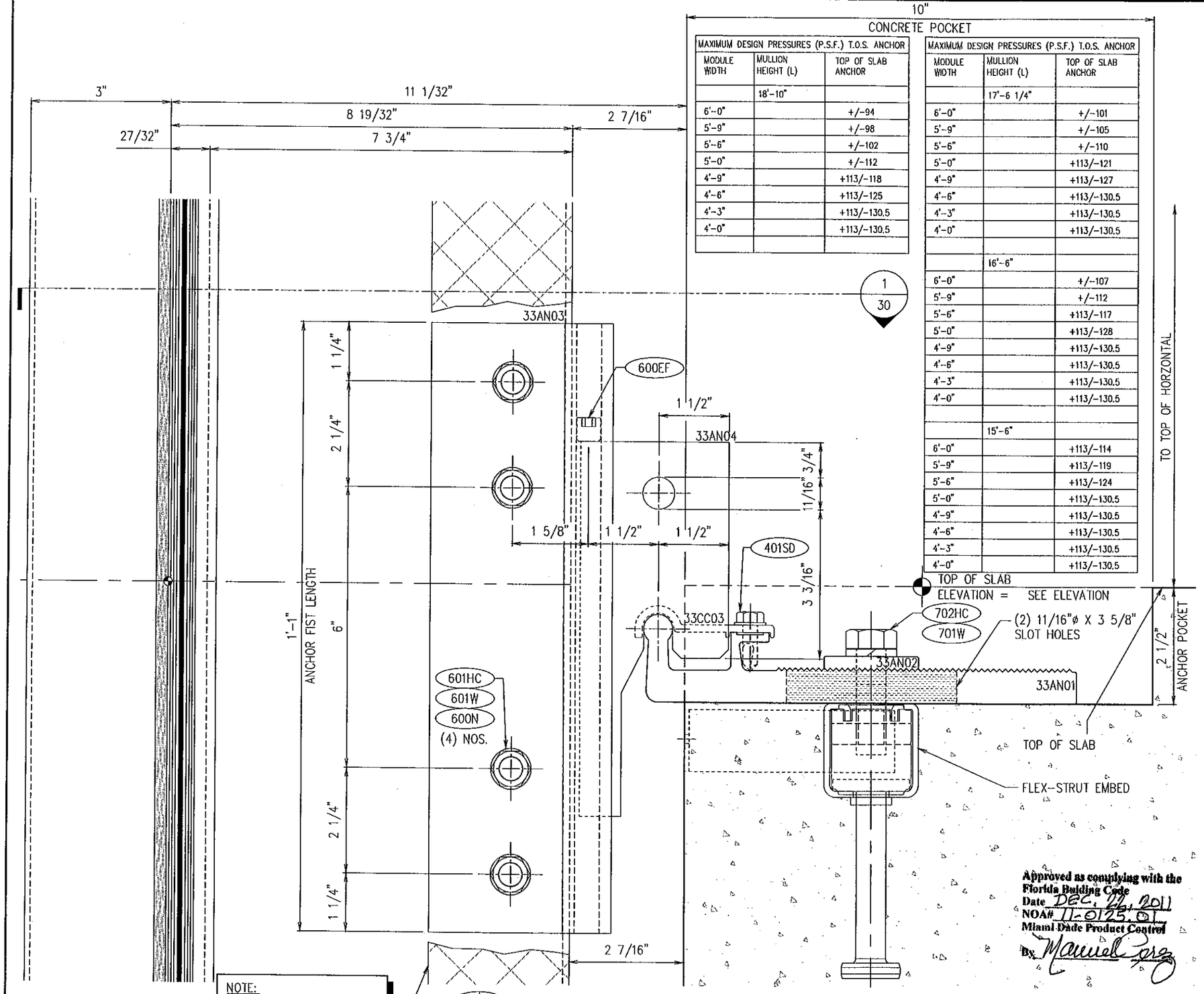

MAXIMUM DESIGN PRESSURES (P.S.F.) T.O.S. ANCHOR		
MODULE WIDTH	MULLION HEIGHT (L)	TOP OF SLAB ANCHOR
	18'-10"	
6'-0"		+/-94
5'-9"		+/-98
5'-6"		+/-102
5'-0"		+/-112
4'-9"		+113/-118
4'-6"		+113/-125
4'-3"		+113/-130.5
4'-0"		+113/-130.5

MAXIMUM DESIGN PRESSURES (P.S.F.) T.O.S. ANCHOR		
MODULE WIDTH	MULLION HEIGHT (L)	TOP OF SLAB ANCHOR
	17'-6 1/4"	
6'-0"		+/-101
5'-9"		+/-105
5'-6"		+/-110
5'-0"		+113/-121
4'-9"		+113/-127
4'-6"		+113/-130.5
4'-3"		+113/-130.5
4'-0"		+113/-130.5
	16'-6"	
6'-0"		+/-107
5'-9"		+/-112
5'-6"		+113/-117
5'-0"		+113/-128
4'-9"		+113/-130.5
4'-6"		+113/-130.5
4'-3"		+113/-130.5
4'-0"		+113/-130.5
	15'-6"	
6'-0"		+113/-114
5'-9"		+113/-119
5'-6"		+113/-124
5'-0"		+113/-130.5
4'-9"		+113/-130.5
4'-6"		+113/-130.5
4'-3"		+113/-130.5
4'-0"		+113/-130.5

MAXIMUM DESIGN PRESSURES (P.S.F.) T.O.S. ANCHOR		
MODULE WIDTH	MULLION HEIGHT (L)	TOP OF SLAB ANCHOR
	14'-6"	
6'-0"		+113/-122
5'-9"		+113/-127
5'-6"		+113/-130.5
5'-0"		+113/-130.5
4'-9"		+113/-130.5
4'-6"		+113/-130.5
4'-3"		+113/-130.5
4'-0"		+113/-130.5
	13'-6"	
6'-0"		+113/-130.5
5'-9"		+113/-130.5
5'-6"		+113/-130.5
5'-0"		+113/-130.5
4'-9"		+113/-130.5
4'-6"		+113/-130.5
4'-3"		+113/-130.5
4'-0"		+113/-130.5
	12'-6"	
6'-0"		+113/-130.5
5'-9"		+113/-130.5
5'-6"		+113/-130.5
5'-0"		+113/-130.5
4'-9"		+113/-130.5
4'-6"		+113/-130.5
4'-3"		+113/-130.5
4'-0"		+113/-130.5
	11'-6"	
6'-0"		+113/-130.5
5'-9"		+113/-130.5
5'-6"		+113/-130.5
5'-0"		+113/-130.5
4'-9"		+113/-130.5
4'-6"		+113/-130.5
4'-3"		+113/-130.5
4'-0"		+113/-130.5
	10'-6"	
6'-0"		+113/-130.5
5'-9"		+113/-130.5
5'-6"		+113/-130.5
5'-0"		+113/-130.5
4'-9"		+113/-130.5
4'-6"		+113/-130.5
4'-3"		+113/-130.5
4'-0"		+113/-130.5
	10'-0"	
6'-0"		+113/-130.5
5'-9"		+113/-130.5
5'-6"		+113/-130.5
5'-0"		+113/-130.5
4'-9"		+113/-130.5
4'-6"		+113/-130.5
4'-3"		+113/-130.5
4'-0"		+113/-130.5

NOTE:
INSULATION SHOWN BROKEN FOR CLARITY

1 | –
49 | –

TYP. T.O. SLAB DEADLOAD ANCHOR @ SPLIT MULLION

Scale: FULL

enclos corp
2770 Blue Water Rd.
Eagan, MN 55121
Tel. 651-796-6100
Fax 651-994-6360

No.	Sub.Rev. No.	Date	Drawn By	Submittal/Revision Description
1	–	24 SEP 10	MGD	1ST SUBMITTAL

ROBERT D. McCAULEY
PE 68037
ENCLOS CORP
2770 BLUE WATER RD.
EAGAN, MN 55121
COA 28468

Reviewed For Structural Validity Only

ROBERT D. McCAULEY No 68037 STATE OF FLORIDA PROFESSIONAL ENGINEER

11-2-11

Date: 10 | Scale: FULL

Project No.
7545 – L.M.I.

Drawing Title

ANCHOR DETAIL
7545 SERIES
CURTAINWALL L.M.I.

Sheet No.
49/61

mporatusk – 26/Oct/11 10:03 AM

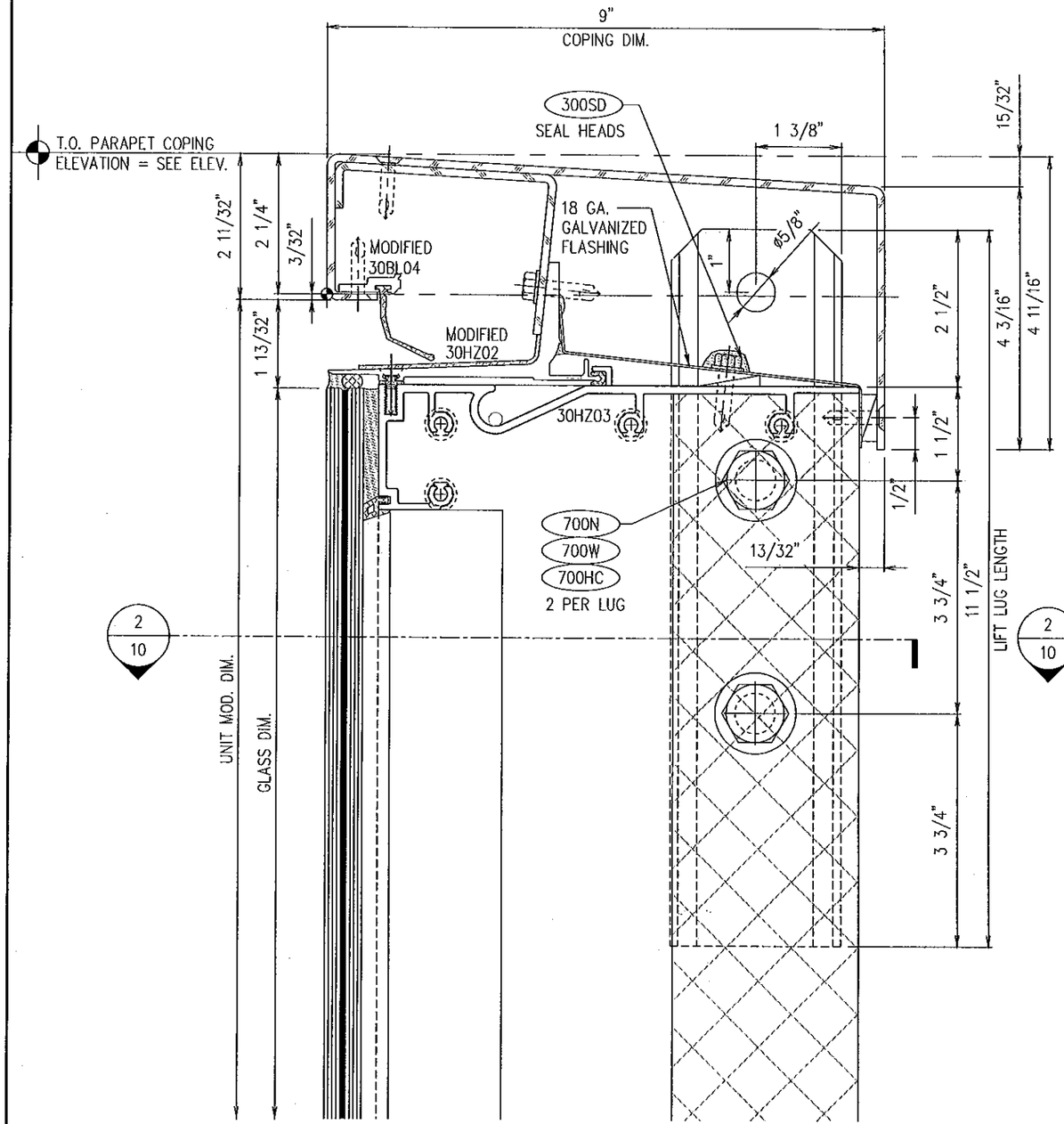

1 / 50 COPING DETAIL

Scale: FULL SIZE USING MODIFIED & BREAK SHAPES

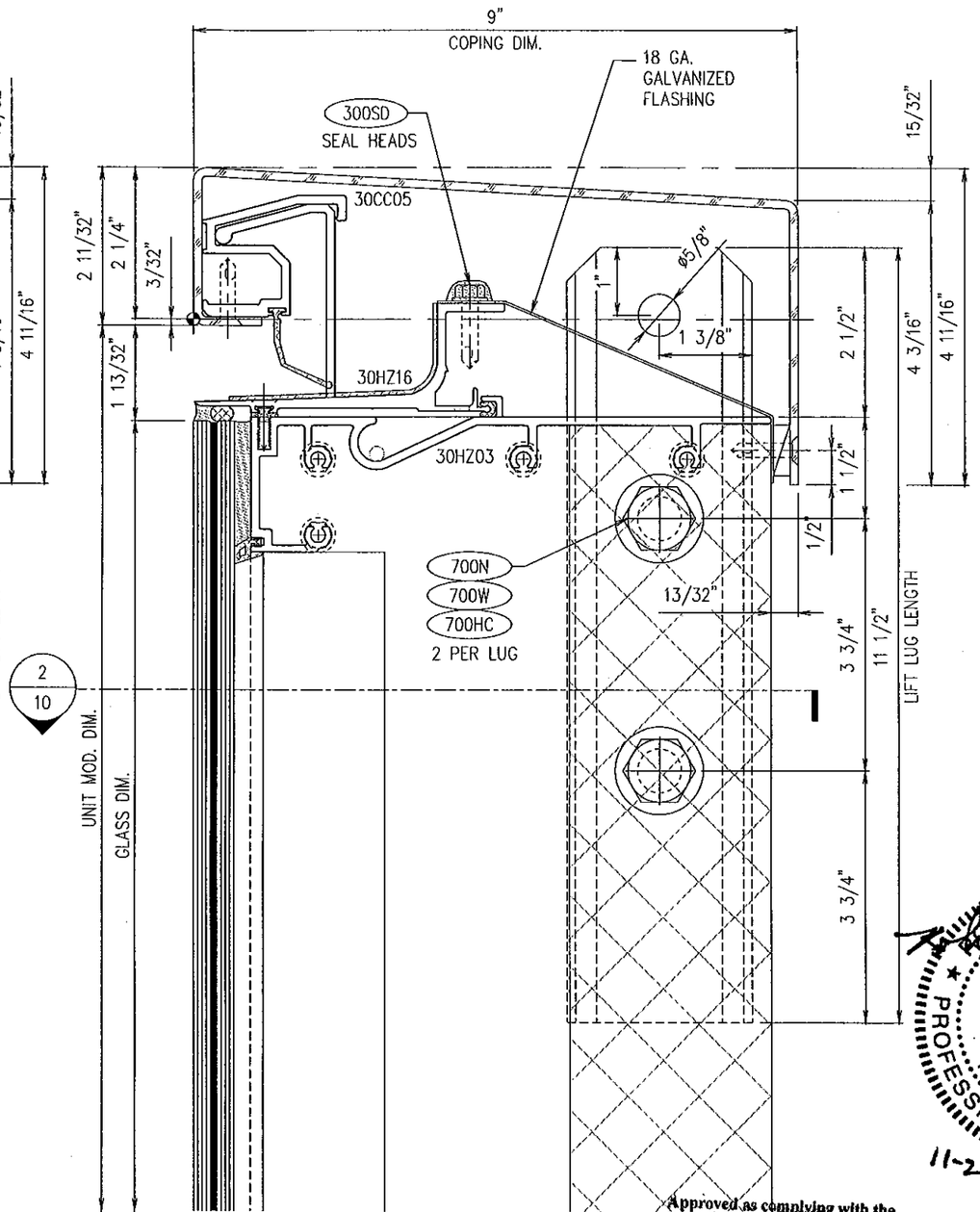

2 / 50 COPING DETAIL

Scale: FULL SIZE USING NEW COPING DIES

Approved as complying with the Florida Building Code
Date DEC. 22 2011
NOA# 11-0125.01
Miami Dade Product Control
By Manuel Lopez

enclos corp®
2770 Blue Water Rd.
Eagan, MN 55121
Tel. 651-796-6100
Fax 651-994-6360

Sub. No.	Rev. No.	Date	Drawn By	Submittal/Revision Description
1	–	24 SEP 10	MGD	1ST SUBMITTAL

ROBERT D. McCAULEY
PE 68037
ENCLOS CORP
2770 BLUE WATER RD.
EAGAN, MN 55121
COA 28169

Renewed For Electronic Signature Purposes Only

ROBERT D. McCAULEY No 68037 STATE OF FLORIDA PROFESSIONAL ENGINEER

11-2-11

Date	Scale
07 APR 10	FULL

Project No.
7545 – L.M.I.

Drawing Title

COPING DETAILS
7545 SERIES
CURTAINWALL L.M.I.

Sheet No.
50/61

mparotusic – 26/Oct/11 10:05 AM

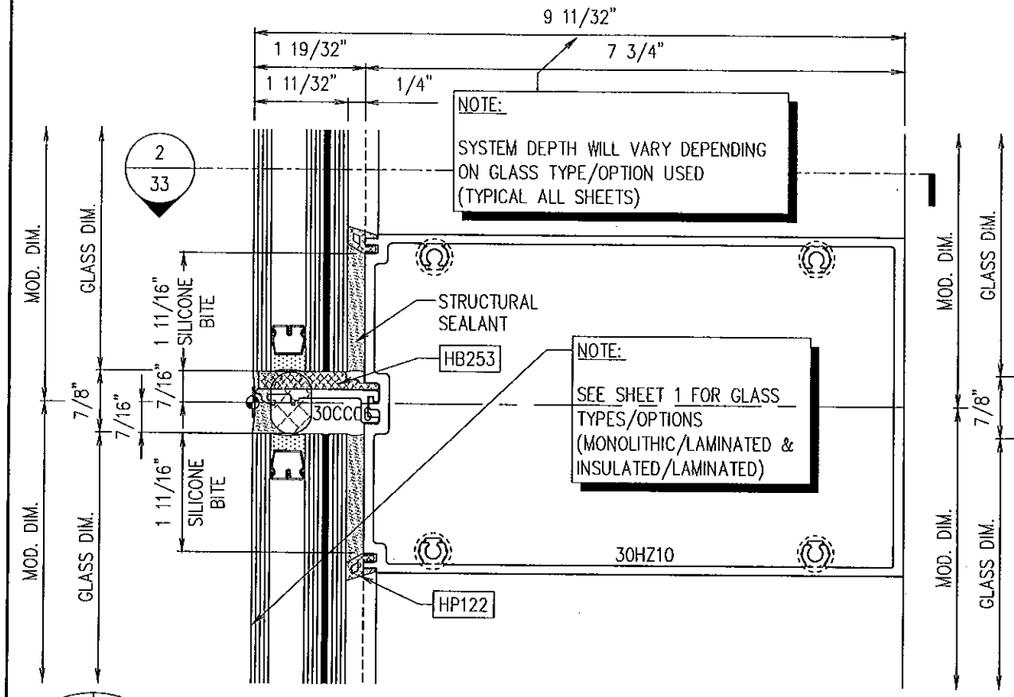

1 – 51 – HORIZ. @ VISION W/O COVER (INSUL. GLASS)
Scale: FULL

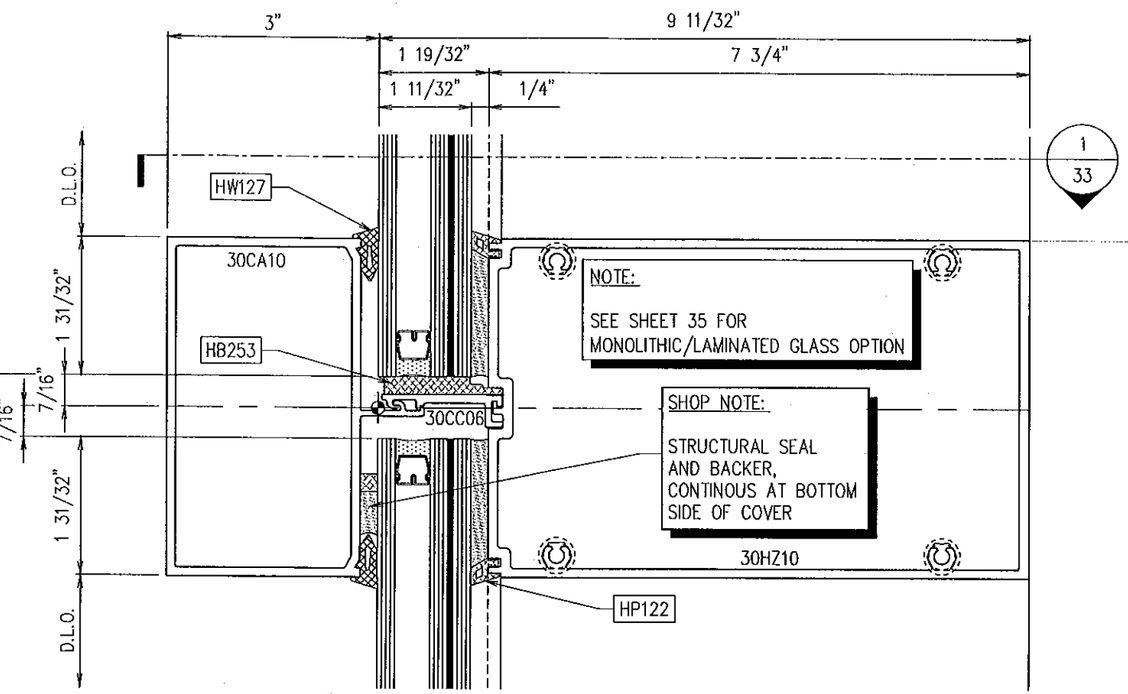

2 – 51 – HORIZ. @ VISION W/ COVER (INSUL. GLASS)
Scale: FULL

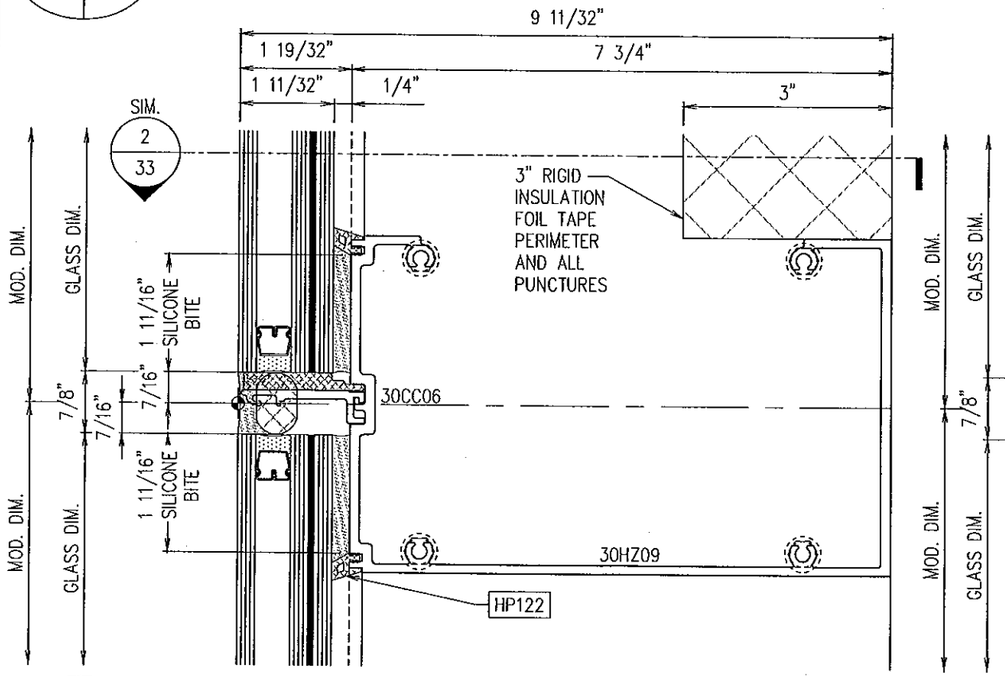

3 – 51 – HORIZONTAL @ SPANDREL W/O COVER (INSUL. GLASS)
Scale: FULL

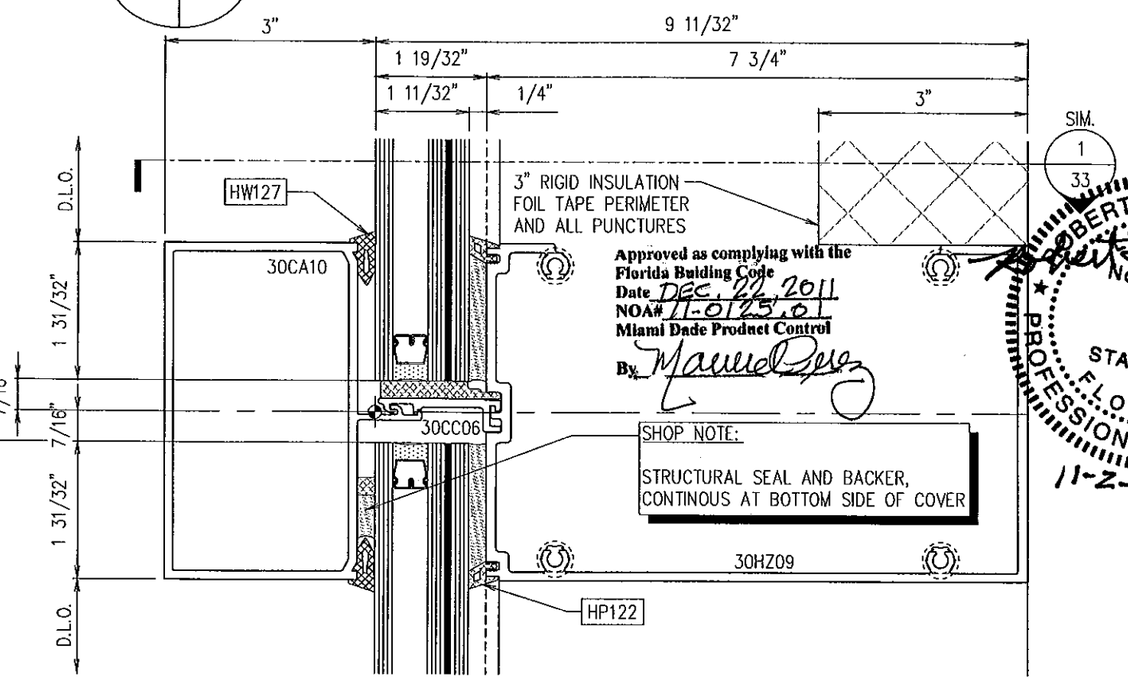

Approved as complying with the Florida Building Code
Date DEC. 22, 2011
NOA# 11-0125.01
Miami Dade Product Control
By [signature]

4 – 51 – HORIZ. @ SPANDREL W/ COVER (INSUL. GLASS)
Scale: FULL

enclos corp
2770 Blue Water Rd.
Eagan, MN 55121
Tel. 651-796-6100
Fax 651-994-6360

Sub. No.	Rev. No.	Date	Drawn By	Submittal/Revision Description
1	–	24 SEP 10	MGD	1ST SUBMITTAL

ROBERT D. McCAULEY
PE 68037
ENCLOS CORP
2770 BLUE WATER RD.
EAGAN, MN 55121
COA 28468

Reviewed For Structural Integrity Only

ROBERT D. McCAULEY No 68037 STATE OF FLORIDA PROFESSIONAL ENGINEER
11-2-11

Date	Scale
07 APR 10	FULL

Project No.
7545 – L.M.I.

Drawing Title
HORIZONTAL DETAILS
7545 SERIES
CURTAINWALL L.M.I.

Sheet No.
51/61

mparatusic – 26/Oct/11 10:05 AM

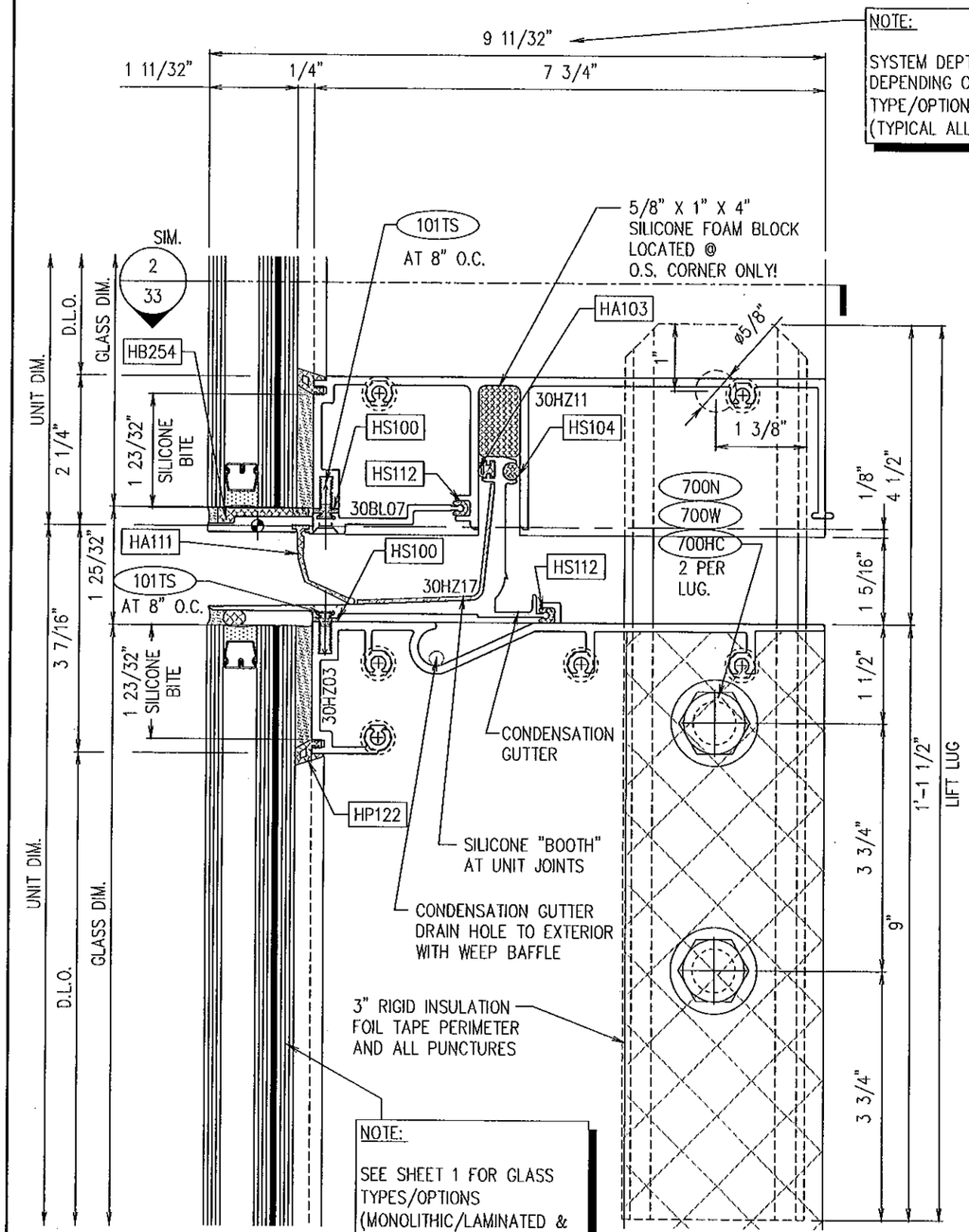

NOTE:

SYSTEM DEPTH WILL VARY DEPENDING ON GLASS TYPE/OPTION USED (TYPICAL ALL SHEETS)

NOTE:

SEE SHEET 1 FOR GLASS TYPES/OPTIONS (MONOLITHIC/LAMINATED & INSULATED/LAMINATED)

1 / 52 TYP. STACK JOINT – WITHOUT COVER (WITH INSULATED GLASS)

Scale: FULL

AT VERTICAL WALL

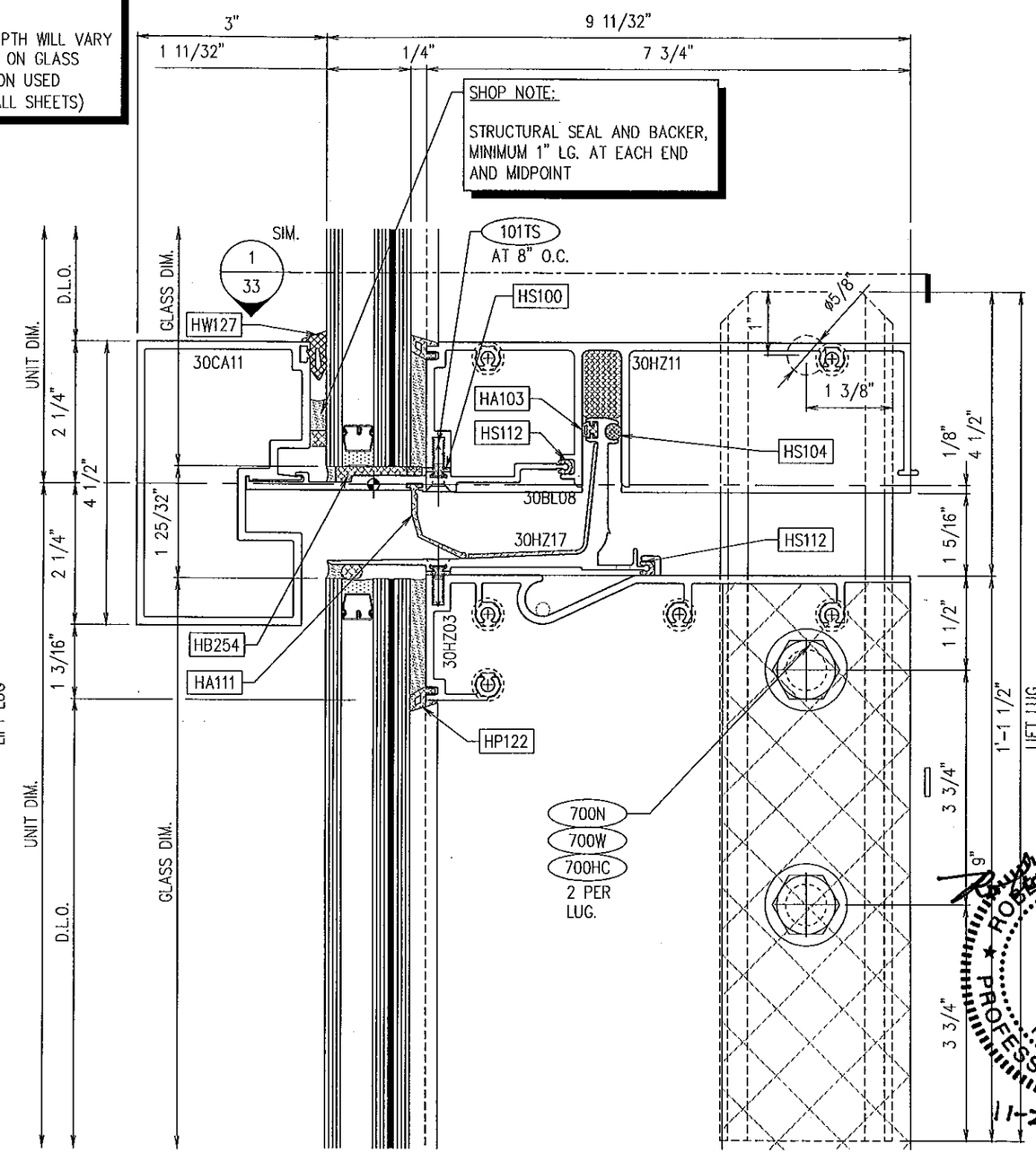

NOTE:

SHOP NOTE:

STRUCTURAL SEAL AND BACKER, MINIMUM 1" LG. AT EACH END AND MIDPOINT

NOTE:

SEE SHEET 36 FOR MONOLITHIC/LAMINATED GLASS OPTION

2 / 52 TYP. STACK JOINT – WITH COVER (WITH INSULATED GLASS)

Scale: FULL

AT VERTICAL WALL

Approved as complying with the Florida Building Code
Date DEC. 22 2011
NOA# 11-0125.01
Miami Dade Product Control
By Manuel Sera

enclos corp
2770 Blue Water Rd.
Eagan, MN 55121
Tel. 651-796-6100
Fax 651-994-6360

Sub. No.	Rev. No.	Date	Drawn By	Submittal/Revision Description
1	–	24 SEP 10	WPB	1ST SUBMITTAL

ROBERT D. McCAULEY
PE 68037
ENCLOS CORP
2770 BLUE WATER RD.
EAGAN, MN 55121
COA 28468

Preliminary Not for Construction Purposes Only

ROBERT D. McCAULEY LICENSE No 68037 STATE OF FLORIDA PROFESSIONAL ENGINEER

11-2-11

Date: 8 SEP 10 | Scale: FULL

Project No. 7545 – L.M.I.

Drawing Title

HORIZONTAL DETAILS
7545 SERIES
CURTAINWALL L.M.I.

Sheet No. 52/61

mporalusic – 26/Oct/11 10:06 AM

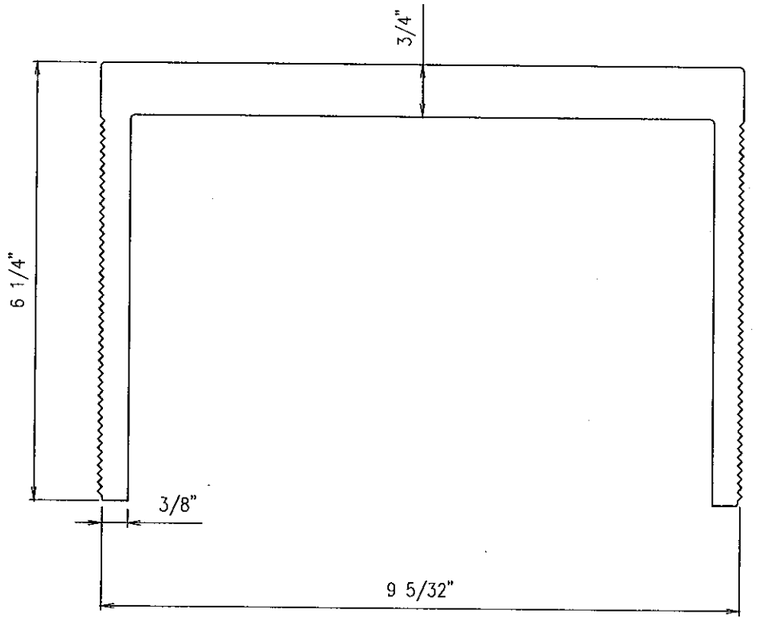

30AN01 (ANCHOR)

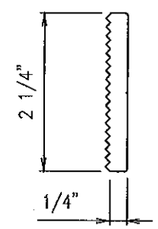

30AN02 (SERRATED WASHER)

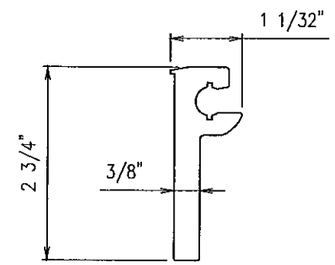

30AN031 (ANCHOR FIST)

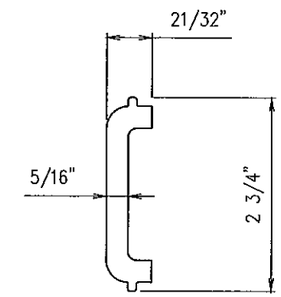

30AN05 (LIFT LUG)

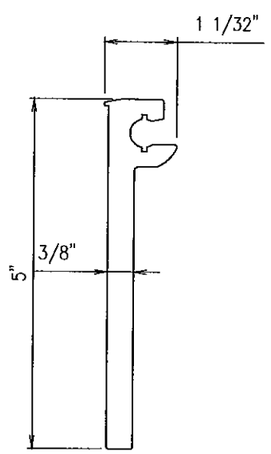

30AN06 (ANCHOR FIST @ CORNER)

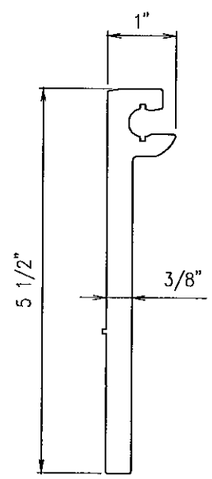

30AN07 (ANCHOR FIST @ CORNER)

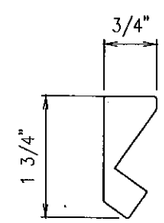

30AN08 (LIFT LUG @ CORNER)

Approved as complying with the Florida Building Code
Date DEC. 22, 2011
NOA# 11-0125.01
Miami Dade Product Control
By Manuel Diaz

enclos corp
2770 Blue Water Rd.
Eagan, MN 55121
Tel. 651-796-6100
Fax 651-994-6360

Sub. No.	Rev. No.	Date	Drawn By	Submittal/Revision Description
1	-	24 SEP 10	MGD	1ST SUBMITTAL

ROBERT D. McCAULEY
PE 68037
ENCLOS CORP
2770 BLUE WATER RD.
EAGAN, MN 55121
COA 28468

Reviewed For Structural Integrity Only

ROBERT D. McCAULEY No 68037 STATE OF FLORIDA PROFESSIONAL ENGINEER
11-2-11

Date 26 MAY 10
Scale FULL

Project No.
7545 - L.M.I.

Drawing Title
DIE SHAPES
7545 SERIES
CURTAINWALL L.M.I.

Sheet No.
53/61

mporatusic -- 10/Aug/11 9:14 AM

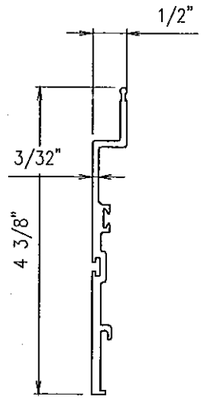

30BL01 (VERT. BLADE)

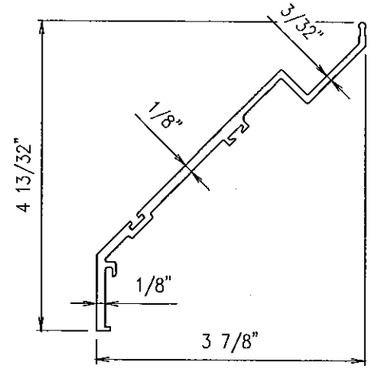

30BL02 (VERT. BLADE)

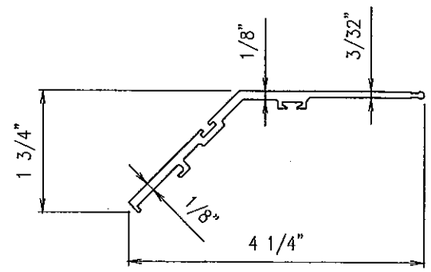

30BL03 (VERT. BLADE)

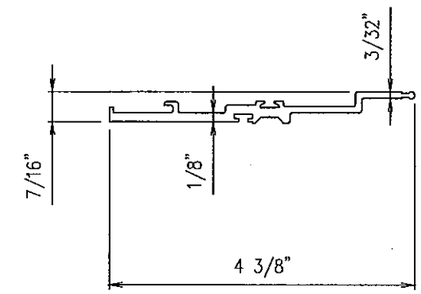

30BL04 (HORIZ. BLADE)

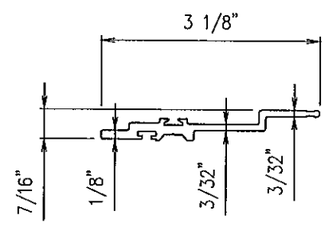

30BL05 (HORIZ. BLADE)

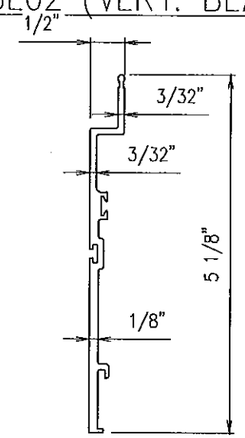

30BL06 (VERT. BLADE)

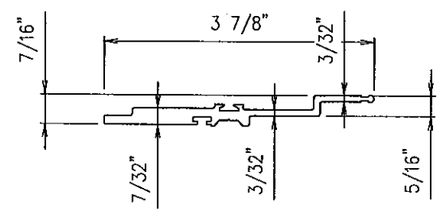

30BL07 (HORIZ. BLADE)

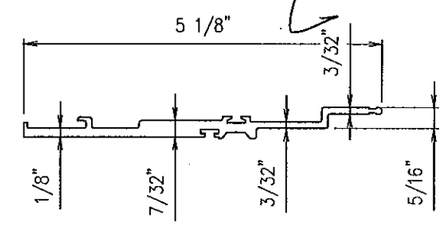

30BL08 (HORIZ. BLADE)

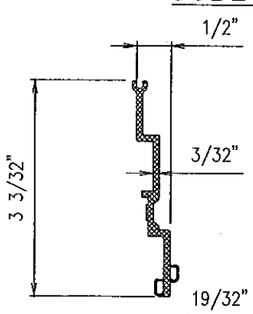

SCP100 (VERT. BLADE)

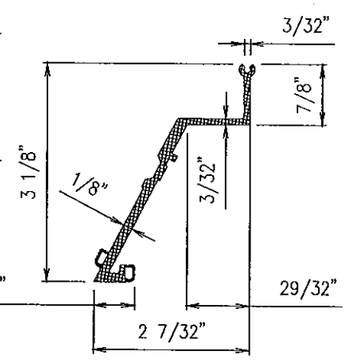

SCP101 (VERT. CORNER BLADE)

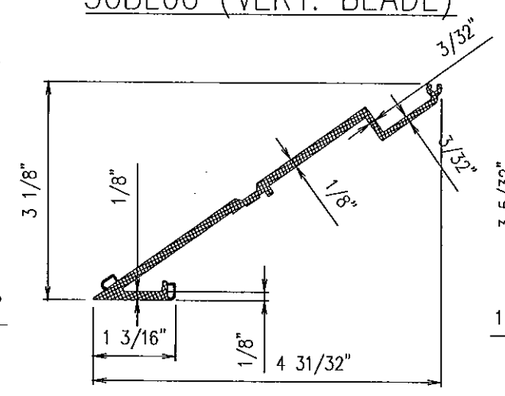

SCP102 (VERT. BLADE)

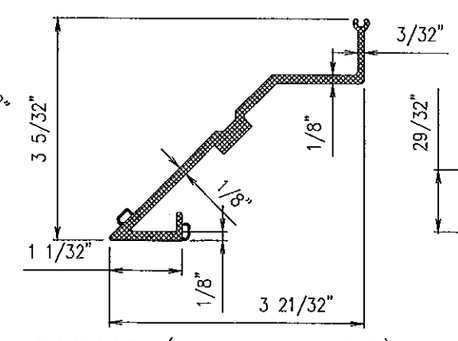

SCP110 (VERT. BLADE)

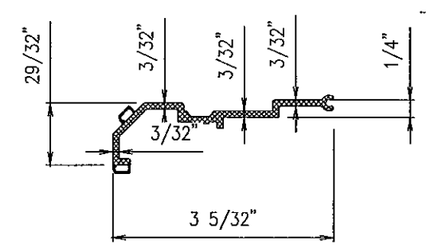

SCP116 (VERT. I.C. BLADE)

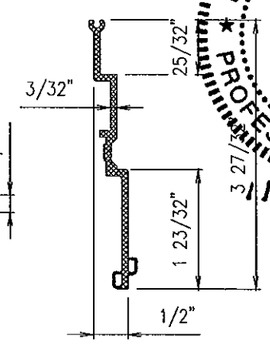

SCP117 (VERT. BLADE)

Approved as complying with the Florida Building Code
Date Dec. 22, 2011
NOA# 11-0125.01
Miami Dade Product Control
By Manuel Perez

enclos corp
2770 Blue Water Rd.
Eagan, MN 55121
Tel. 651-796-6100
Fax 651-994-6360

Sub. No.	Rev. No.	Date	Drawn By	Submittal/Revision Description
1	-	24 SEP 10	MGD	1ST SUBMITTAL

ROBERT D. McCAULEY
PE 68037
ENCLOS CORP
2770 BLUE WATER RD.
EAGAN, MN 55121
COA 28468

Reviewed for Structural Integrity Only

ROBERT D. McCAULEY LICENSED No 68037 STATE OF FLORIDA PROFESSIONAL ENGINEER

11-2-11

Date 25 MAR 11
Scale FULL

Project No. 7545 - L.M.I.

Drawing Title

DIE SHAPES
7545 SERIES
CURTAINWALL L.M.I.

Sheet No. 54/61

mporotusic - 10/Aug/11 9:15 AM

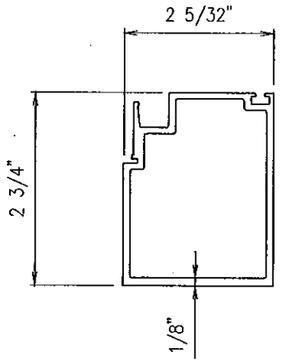

30CA01 (VERT. COVER)

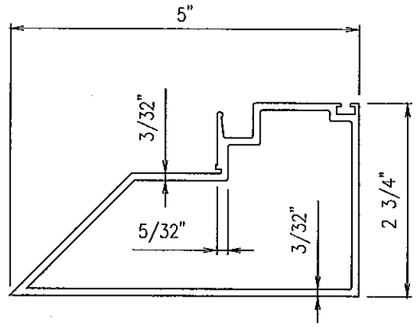

30CA02 (VERT. COVER)

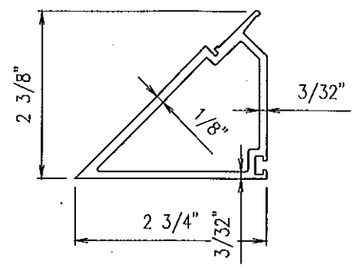

30CA03 (VERT. COVER)

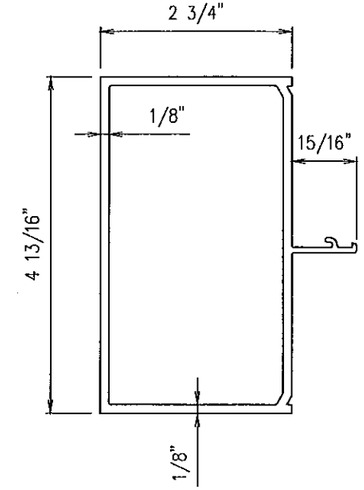

30CA10 (HORIZ. COVER)

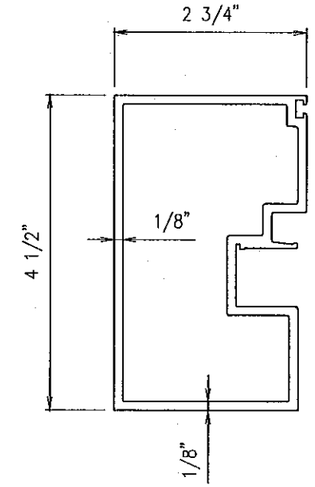

30CA11 (HORIZ. COVER)

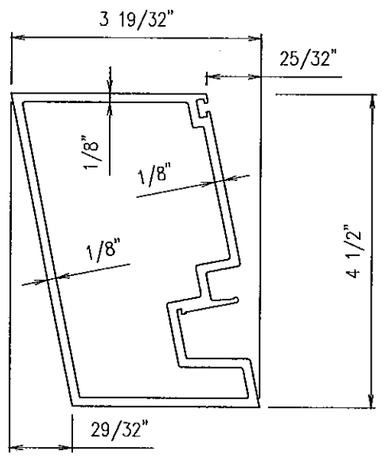

30CA13 (HORIZ. OUT-SLOPE STACK COVER)

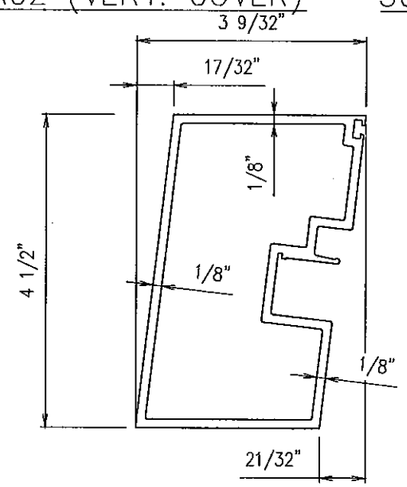

30CA14 (HORIZ. IN-SLOPE STACK COVER)

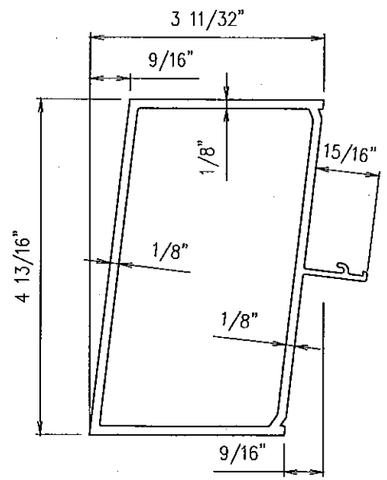

30CA15 (HORIZ. IN-SLOPE INTM. COVER)

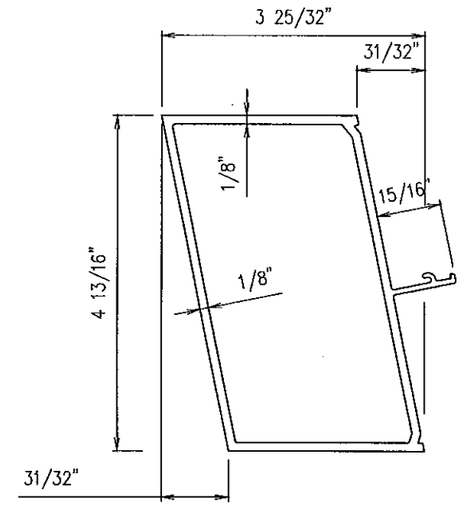

30CA16 (HORIZ. OUT-SLOPE INTM. COVER)

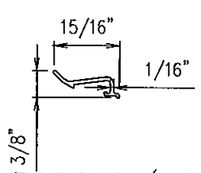

30CC01 (AB CLIP)

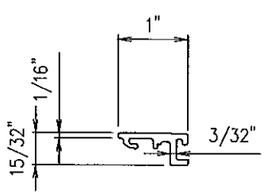

30CC02 (HORIZONTAL BLADE)

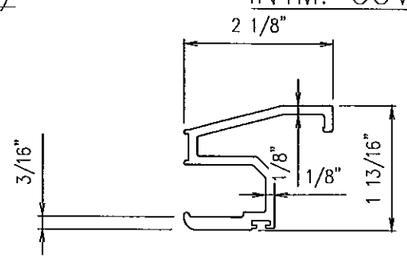

30CC05 (PARAPET COPING ADAPTOR)

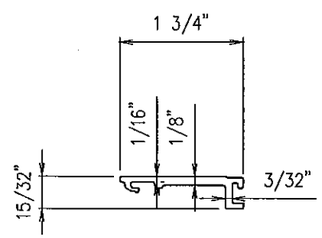

30CC06 (HORIZONTAL BLADE)

Approved as complying with the Florida Building Code
Date DEC. 22, 2011
NOA# 11-0125.01
Miami Dade Product Control
By [signature]

enclos corp
2770 Blue Water Rd.
Eagan, MN 55121
Tel. 651-796-6100
Fax 651-994-6360

Sub. No.	Rev. No.	Date	Drawn By	Submittal/Revision Description
1	-	24 SEP 10	MGD	1ST SUBMITTAL

ROBERT D. McCAULEY
PE 68037
ENCLOS CORP
2770 BLUE WATER RD.
EAGAN, MN 55121
[illegible]

Reviewed for Structural Integrity Only

ROBERT D. McCAULEY
No 68037
STATE OF FLORIDA
PROFESSIONAL ENGINEER
11-2-11

Date	Scale
23 MAR 10	FULL

Project No.
7545 - L.M.I.

Drawing Title
DIE SHAPES
7545 SERIES
CURTAINWALL L.M.I.

Sheet No.
55/61

mperatusic - 18/Aug/11 10:23 AM

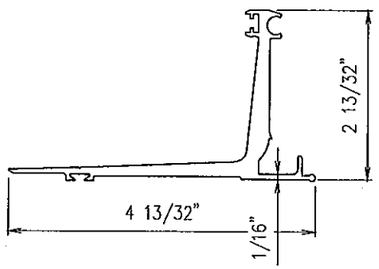

30HZ02 (HORIZONTAL GUTTER)

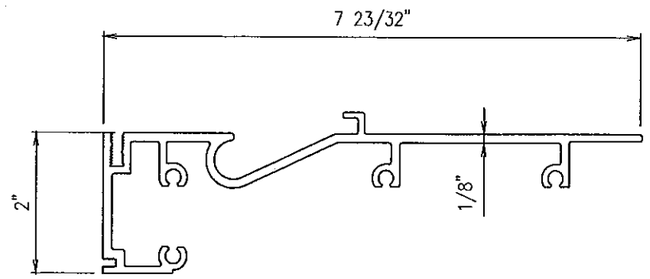

30HZ03 (HORIZONTAL INSLOPE HEAD)

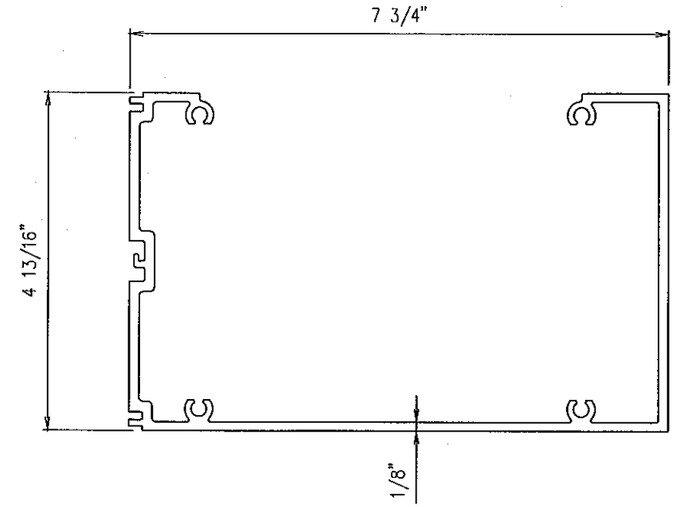

30HZ09 (HORIZONTAL INTM. – OPEN)

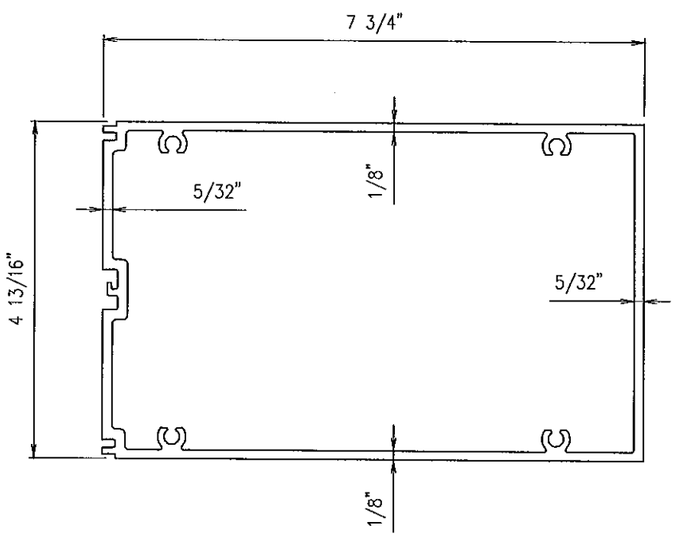

30HZ10 (HORIZONTAL INTM. – CLOSED)

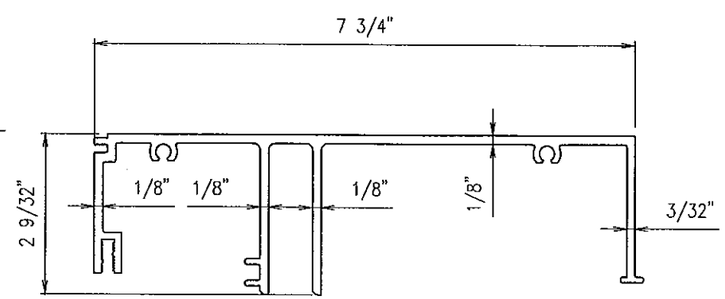

30HZ11 (HORIZONTAL SILL)

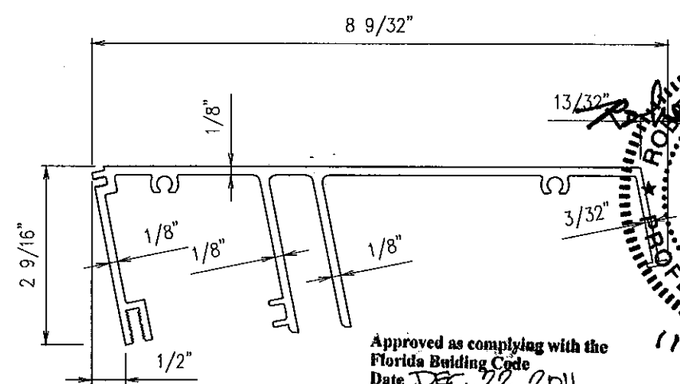

30HZ12 (HORIZONTAL OUTSLOPE SILL)

Approved as complying with the Florida Building Code
Date Dec. 22 2011
NOA# 11-0125.01
Miami Dade Product Control
By Manuel Perez

enclos corp
2770 Blue Water Rd.
Eagan, MN 55121
Tel. 651-796-6100
Fax 651-994-6360

Sub. No.	Rev. No.	Date	Drawn By	Submittal/Revision Description
1	–	24 SEP 10	MGD	1ST SUBMITTAL

ROBERT D. McCAULEY
PE 68037
ENCLOS CORP
2770 BLUE WATER RD.
EAGAN, MN 55121
COA 28468

Reviewed For Structural Integrity Only

ROBERT D. McCAULEY No 68037 STATE OF FLORIDA PROFESSIONAL ENGINEER

11-2-11

Date 23 MAR 10

Scale FULL

Project No. 7545 – L.M.I.

Drawing Title

DIE SHAPES
7545 SERIES
CURTAINWALL L.M.I.

Sheet No. 56/61

mparatusic – 18/Aug/11 10:23 AM

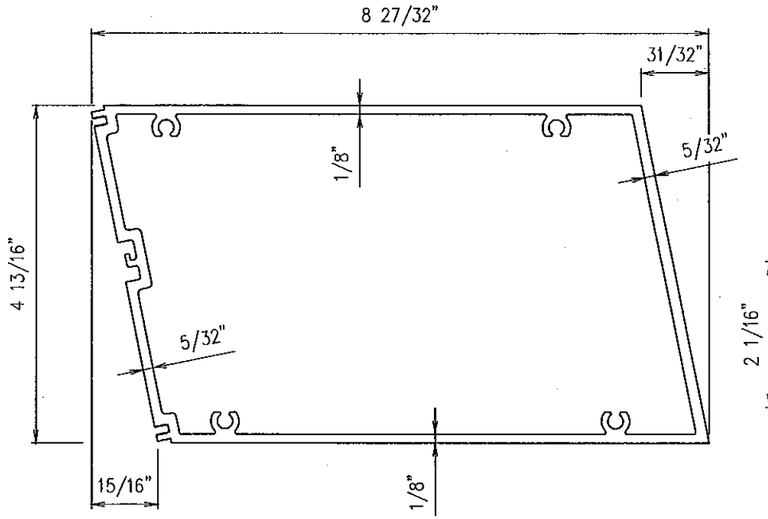

30HZ13 (HORIZONTAL OUTSLOPE INTM. – CLOSED)

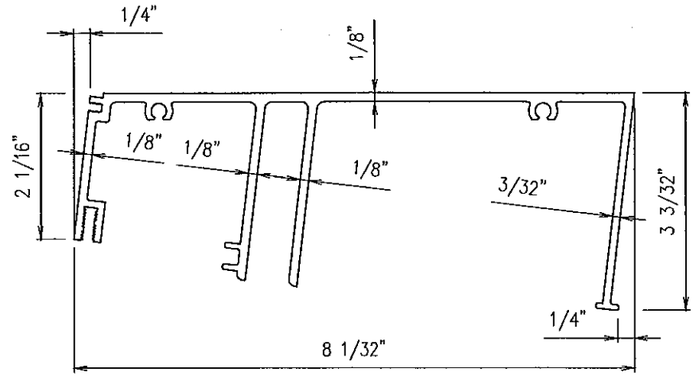

30HZ14 (HORIZONTAL INSLOPE SILL)

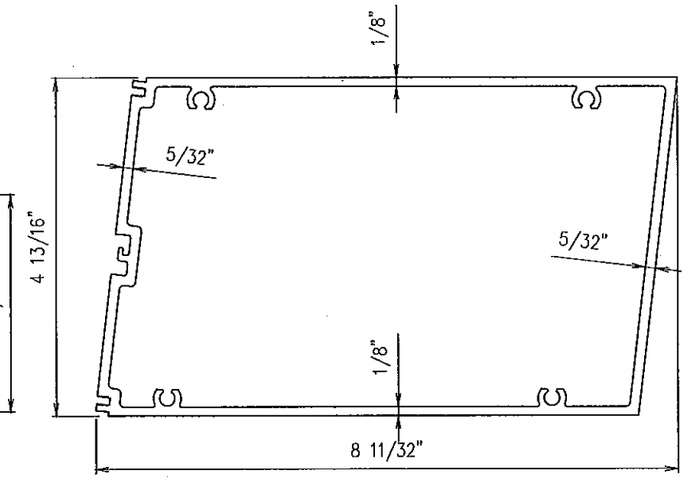

30HZ15 (HORIZONTAL INSLOPE INTM. – CLOSED)

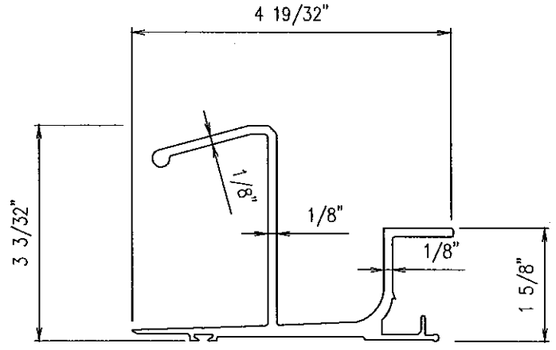

30HZ16 (HORIZONTAL PARAPET GUTTER)

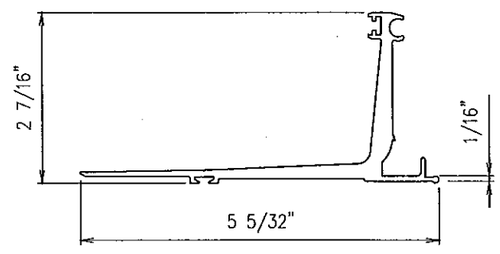

30HZ17 (HORIZONTAL GUTTER)

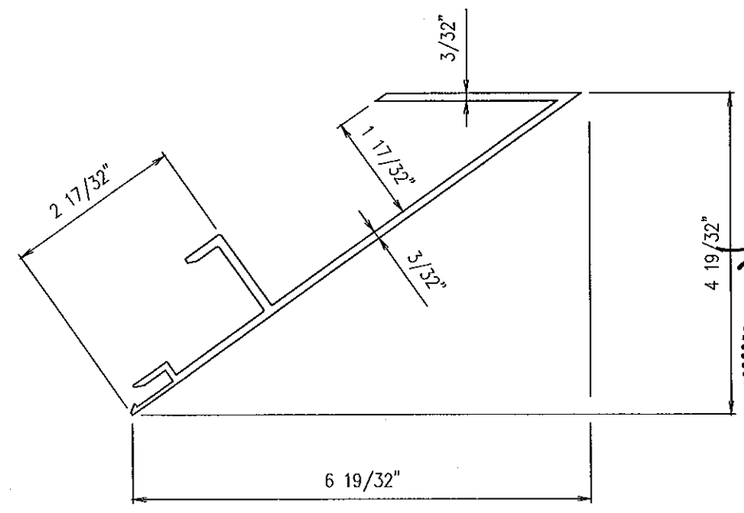

30TR01 (VERTICAL INTERIOR TRIM)

Approved as complying with the Florida Building Code
Date DEC. 22, 2011
NOA# 11-0125.01
Miami Dade Product Control
By Manuel Perez

enclos corp
2770 Blue Water Rd.
Eagan, MN 55121
Tel. 651-796-6100
Fax 651-994-6360

Sub. No.	Rev. No.	Date	Drawn By	Submittal/Revision Description
1	–	24 SEP 10	MGD	1ST SUBMITTAL

ROBERT D. McCAULEY
PE 68037
ENCLOS CORP
2770 BLUE WATER RD.
EAGAN, MN 55121
COA 28468

Reviewed For Structural Integrity Only

ROBERT D. McCAULEY LICENSE No 68037 STATE OF FLORIDA PROFESSIONAL ENGINEER

11-2-11

Date	Scale
23 MAR 10	FULL

Project No.
7545 – L.M.I.

Drawing Title
DIE SHAPES
7545 SERIES
CURTAINWALL L.M.I.

Sheet No.
57/61

mporotusic – 18/Aug/11 10:28 AM

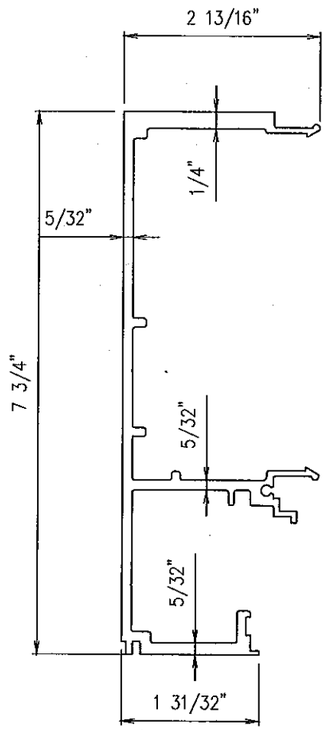

30VE01 (VERT. MALE MULLION)

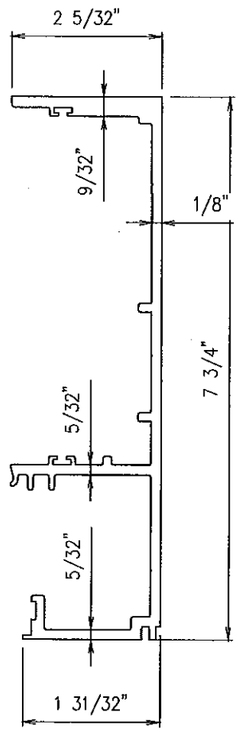

30VE02 (VERT. FEMALE MULLION)

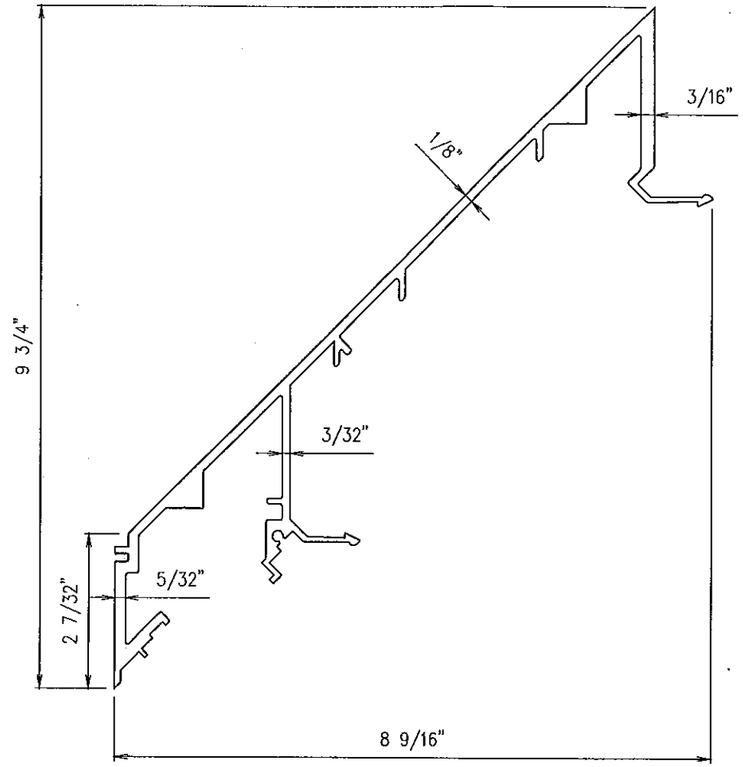

30VE03 (VERT. CORNER MALE MULLION)

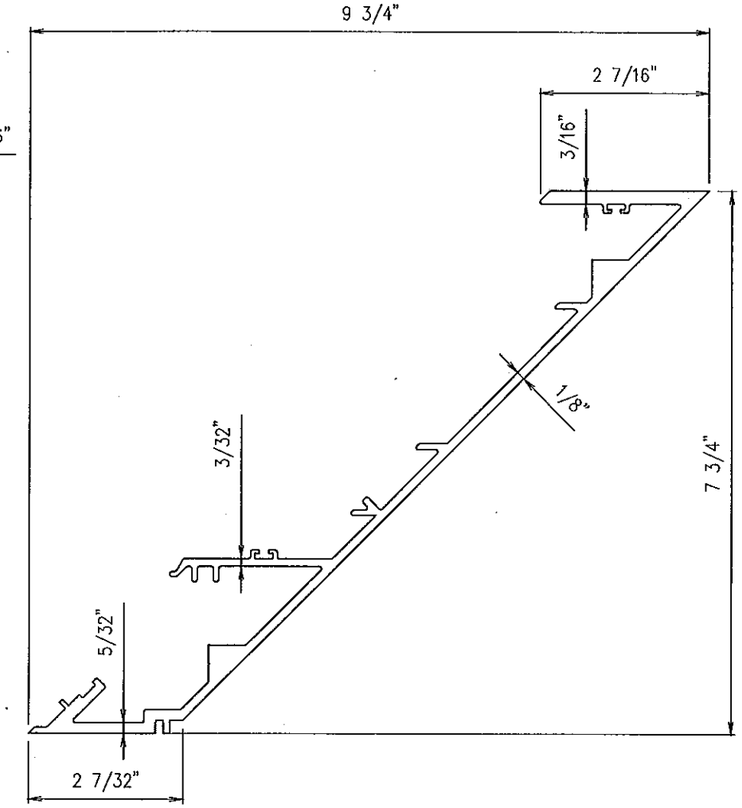

30VE04 (VERTICAL CORNER FEMALE MULLION)

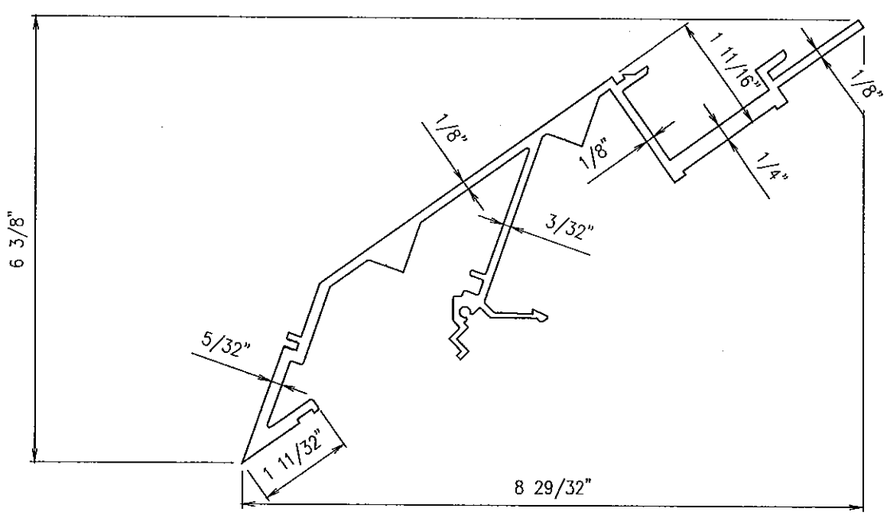

30VE05 (VERTICAL CORNER MALE MULLION)

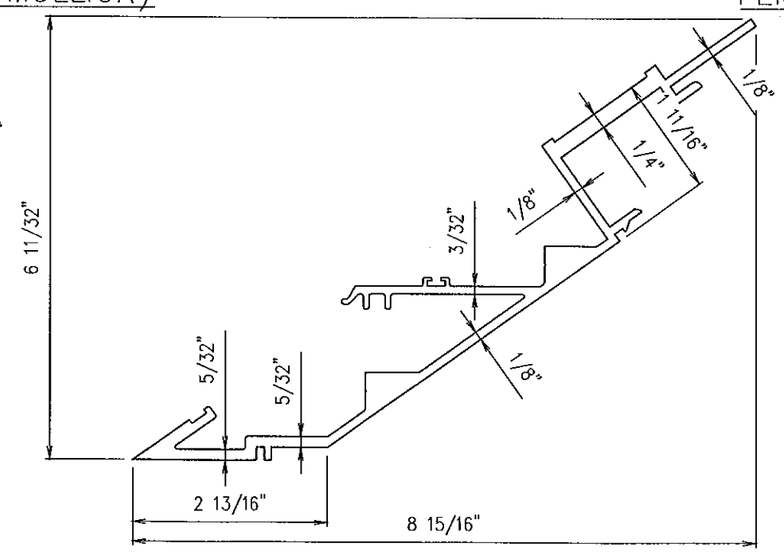

30VE06 (VERTICAL CORNER FEMALE MULLION)

Approved as complying with the Florida Building Code
Date DEC. 22, 2011
NOA# 11-0125.01
Miami Dade Product Control
By Manuel Perez

enclos corp
2770 Blue Water Rd.
Eagan, MN 55121
Tel. 651-796-6100
Fax 651-994-6360

No.	Sub.Rev.	Date	Drawn By	Submittal/Revision Description
1	-	24 SEP 10	MGD	1ST SUBMITTAL

ROBERT D. McCAULEY
PE 68037
ENCLOS CORP
2770 BLUE WATER RD.
EAGAN, MN 55121

ROBERT D. McCAULEY
No 68037
STATE OF FLORIDA
PROFESSIONAL ENGINEER
11-2-11

Date	Scale
23 MAR 10	FULL

Project No.
7545 - L.M.I.

Drawing Title

DIE SHAPES
7545 SERIES
CURTAINWALL L.M.I.

Sheet No.
58/61

mporatusic - 10/Aug/11 9:17 AM

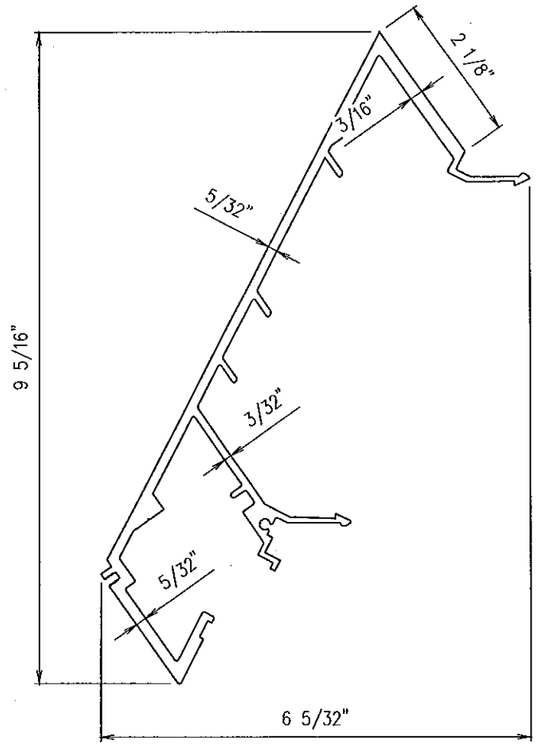

30VE07 (VERTICAL CORNER MALE MULLION)

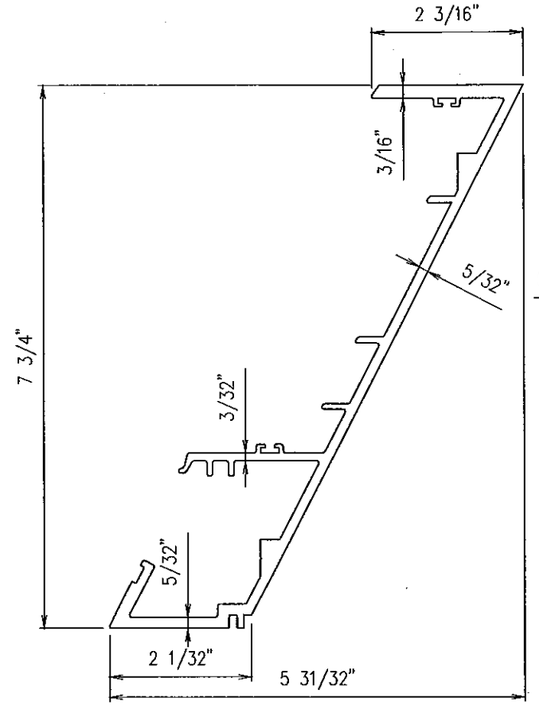

30VE08 (VERTICAL CORNER FEMALE MULLION)

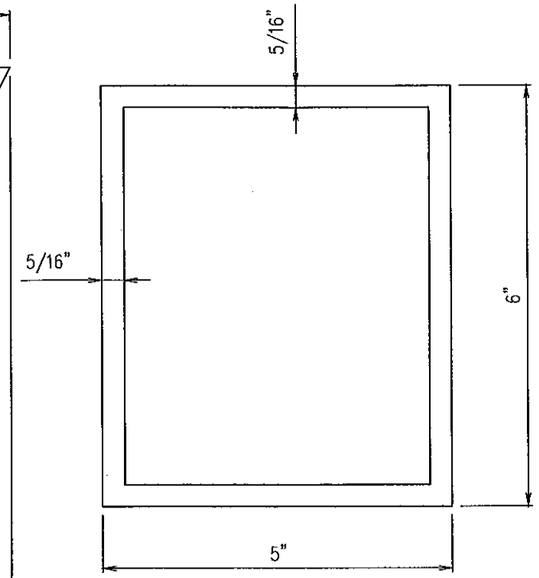

30VE11 (VERTICAL INTM. MULLION)

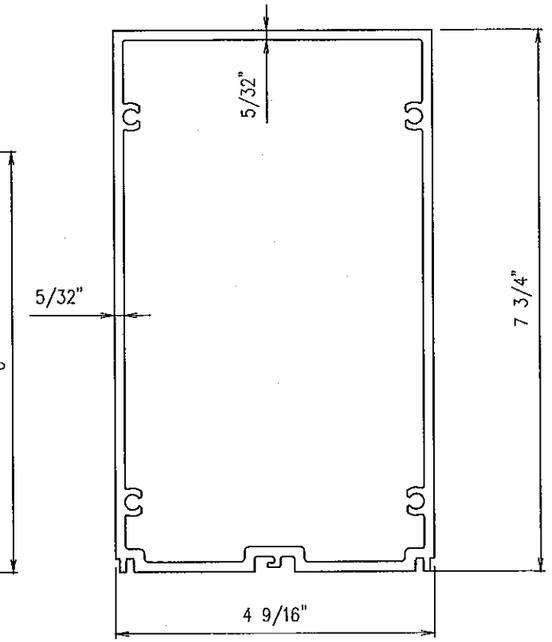

30VE12 (VERTICAL INTM. MULLION)

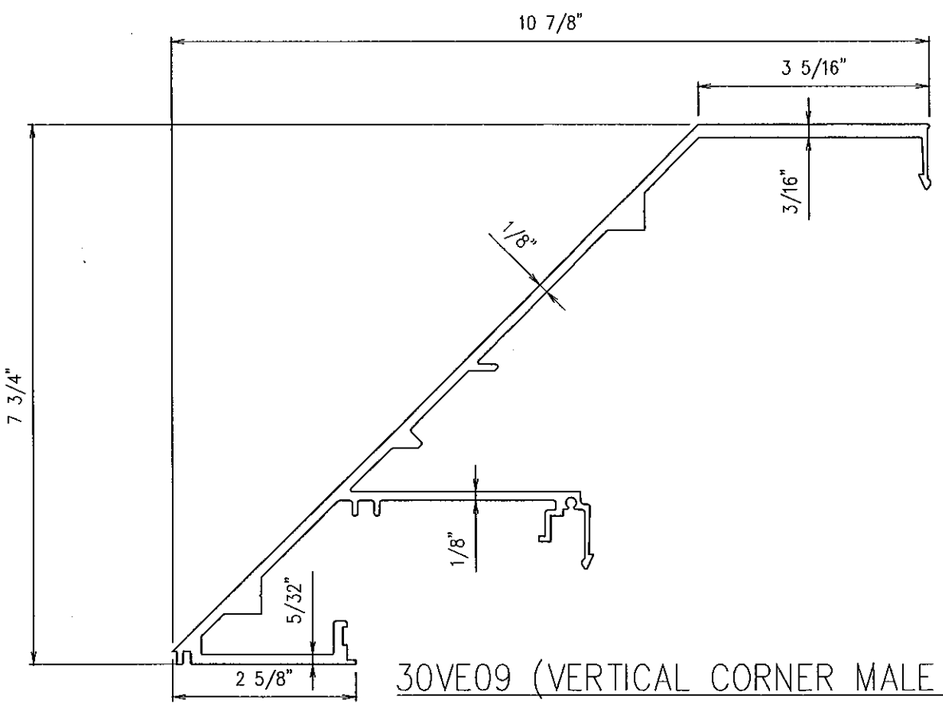

30VE09 (VERTICAL CORNER MALE MULLION)

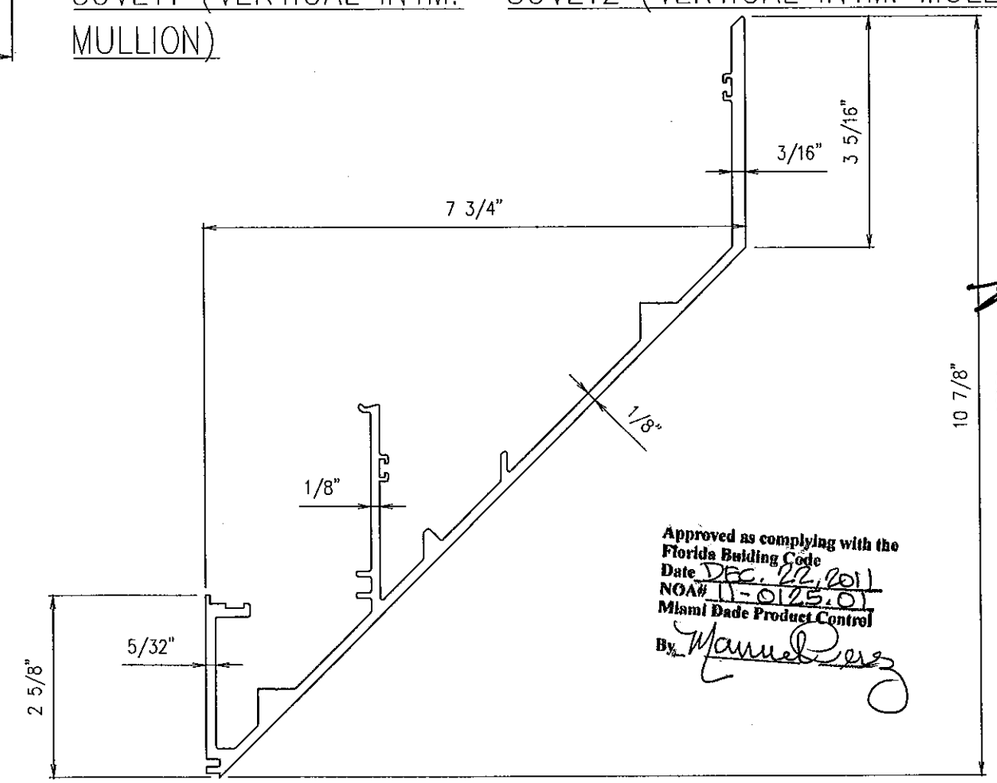

30VE10 (VERTICAL CORNER FEMALE MULLION)

Approved as complying with the Florida Building Code
Date DEC. 22, 2011
NOA# 11-0125.01
Miami Dade Product Control
By Manuel Perez

enclos corp
2770 Blue Water Rd.
Eagan, MN 55121
Tel. 651-796-6100
Fax 651-994-6360

Sub. No.	Rev. No.	Date	Drawn By	Submittal/Revision Description
1	-	24 SEP 10	MGD	1ST SUBMITTAL

ROBERT D. McCAULEY
PE 68037
ENCLOS CORP
2770 BLUE WATER RD.
EAGAN, MN 55121

ROBERT D. McCAULEY
No 68037
STATE OF FLORIDA
PROFESSIONAL ENGINEER
11-2-11

Date	Scale
23 MAR 10	FULL

Project No.
7545 - L.M.I.

Drawing Title
DIE SHAPES
7545 SERIES
CURTAINWALL L.M.I.

Sheet No.
59/61

mparatusic - 10/Aug/11 9:17 AM

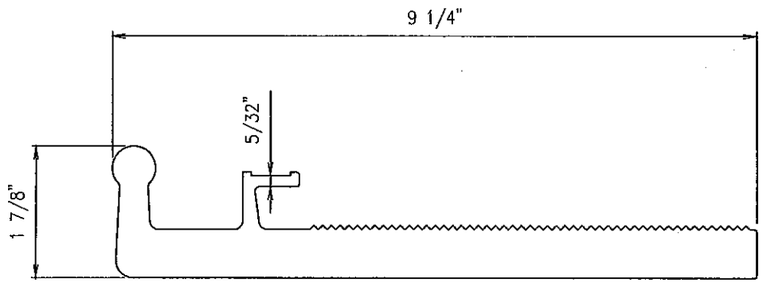

33AN01 (ANCHOR BASE PLATE)

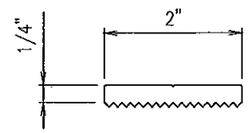

33AN02 (SERRATED WASHER)

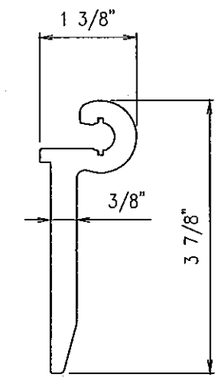

33AN03 (ANCHOR FIST)

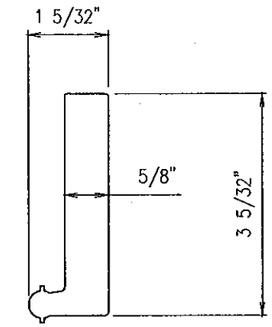

33AN04 (ANCHOR HOOK)

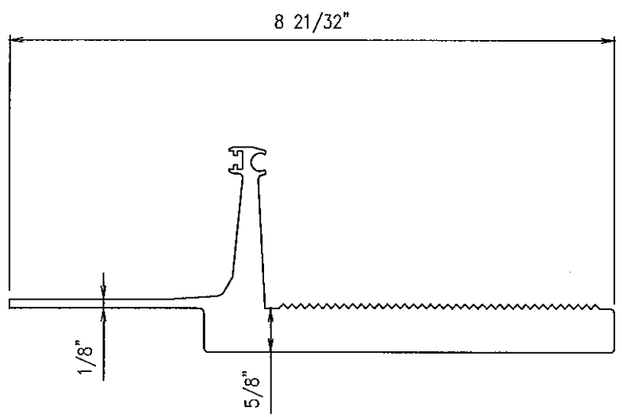

41AN190 (STARTER SILL)

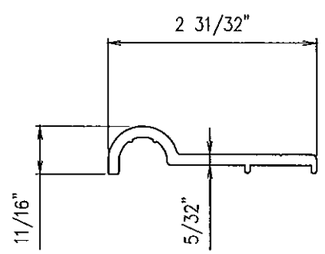

33CC03 (ANTI-WALK CLIP)

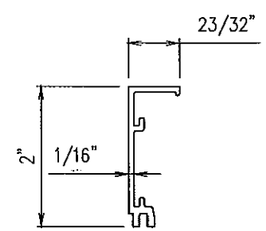

33CC17 (GLAZING ADAPTOR)

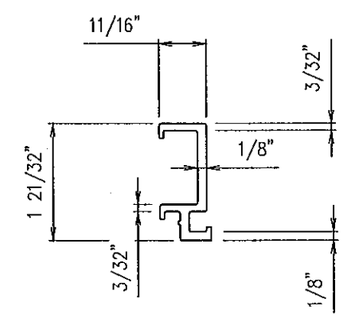

33CC18 (GLAZING ADAPTOR)

Approved as complying with the Florida Building Code
Date DEC. 22, 2011
NOA# 11-0125.01
Miami Dade Product Control
By Manuel Perez

enclos corp
2770 Blue Water Rd.
Eagan, MN 55121
Tel. 651-796-6100
Fax 651-994-6360

Sub No.	Rev. No.	Date	Drawn By	Submittal/Revision Description
1	-	24 SEP 10	MGD	1ST SUBMITTAL

ROBERT D. McCAULEY
PE 68037
ENCLOS CORP
2770 BLUE WATER RD.
EAGAN, MN 55121
COA 28468

Reviewed for Structural Engineering Only

ROBERT D. McCAULEY
LICENSE
No 68037
STATE OF FLORIDA
PROFESSIONAL ENGINEER

11-2-11

Date	Scale
25 MAR 10	FULL

Project No.
7545 - L.M.I.

Drawing Title
DIE SHAPES
7545 SERIES
CURTAINWALL L.M.I.

Sheet No.
60/61

mparalusic - 18/Aug/11 9:19 AM

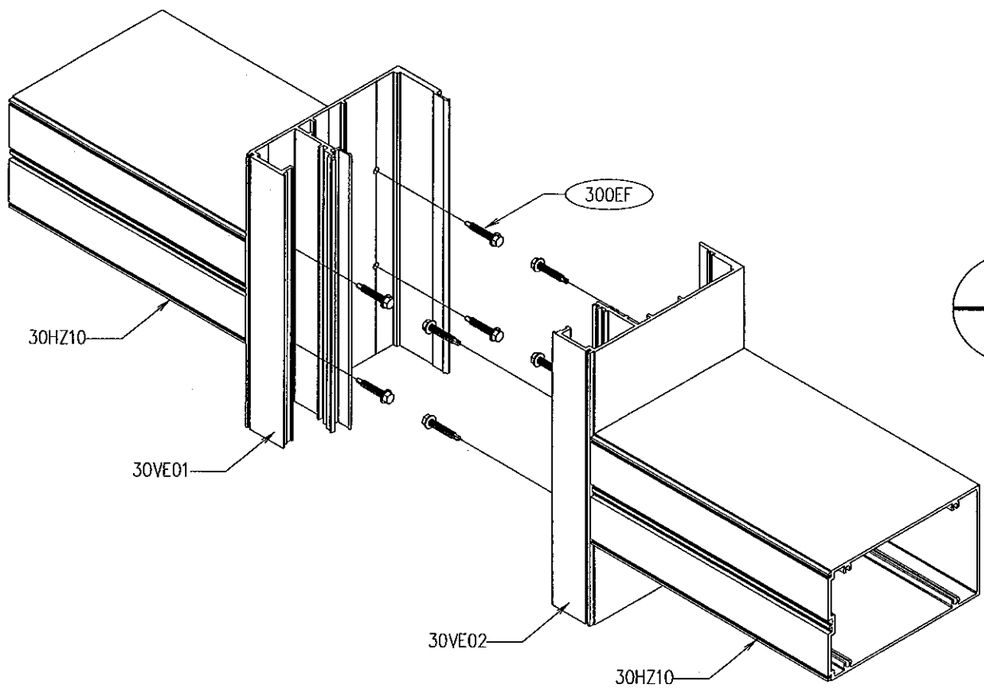

1 / 61 INTM. ISOMETRIC JOINERY DETAIL
N.T.S.

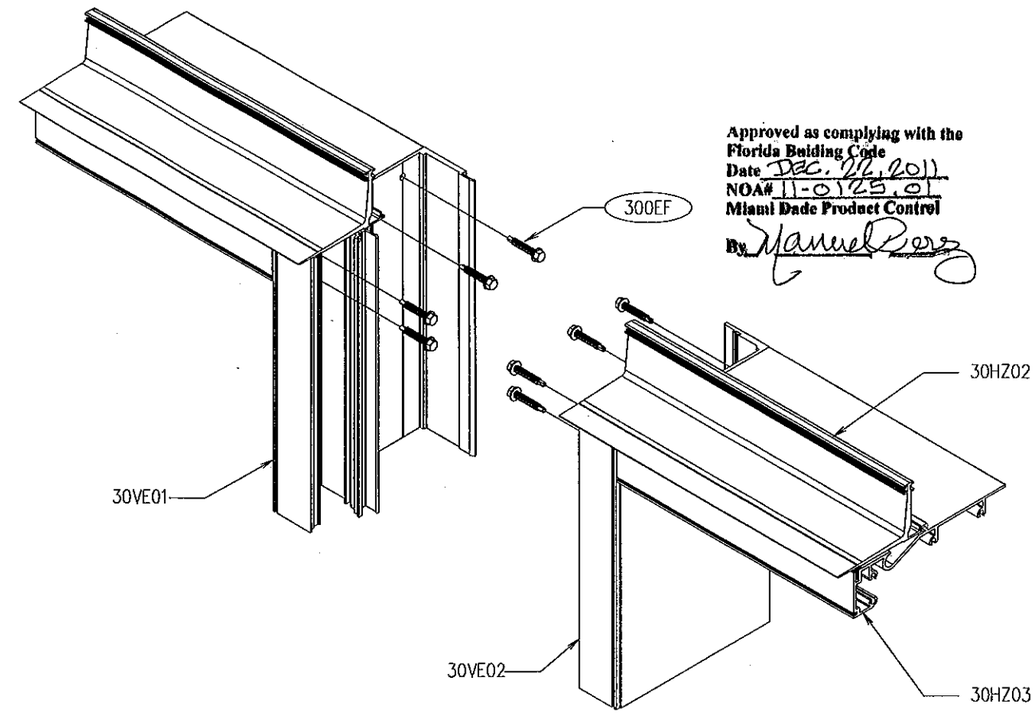

2 / 61 HEAD HORIZ. ISOMETRIC JOINERY DETAIL
N.T.S.

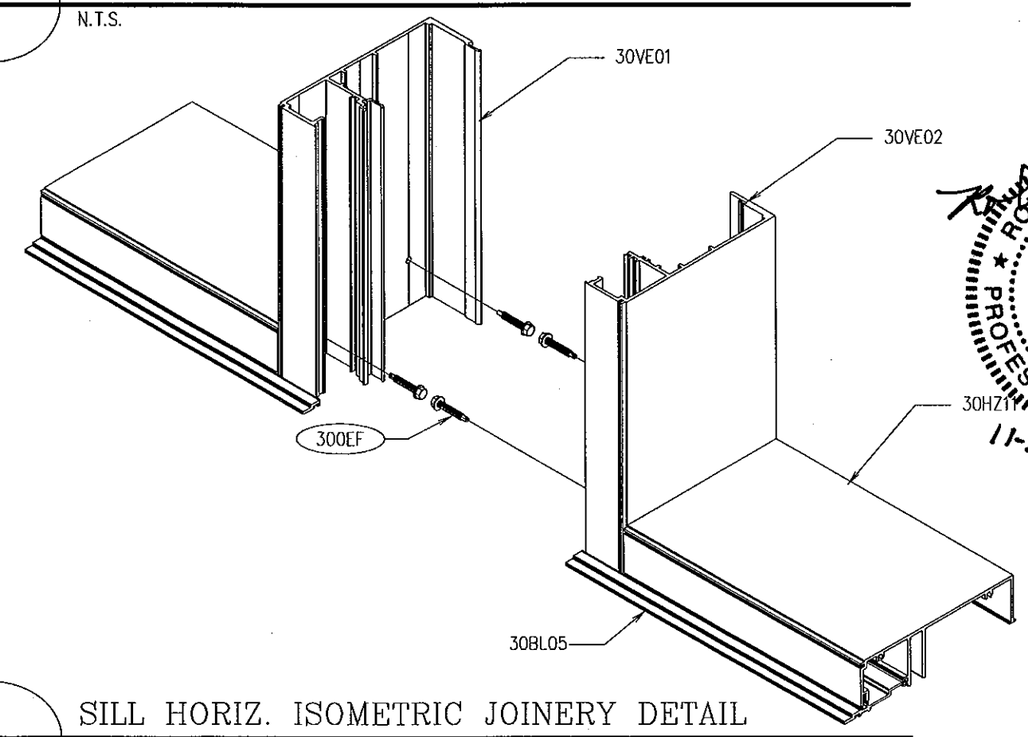

3 / 61 SILL HORIZ. ISOMETRIC JOINERY DETAIL
N.T.S.

Approved as complying with the Florida Building Code
Date Dec. 22, 2011
NOA# 11-0125.01
Miami Dade Product Control
By Manuel Perez

enclos corp
2770 Blue Water Rd.
Eagan, MN 55121
Tel. 651-796-6100
Fax 651-994-6360

Sub. No.	Rev. No.	Date	Drawn By	Submittal/Revision Description
1	-	24 SEP 10	WPB	1ST SUBMITTAL

ROBERT D. McCAULEY
PE 68037
ENCLOS CORP
2770 BLUE WATER RD.
EAGAN, MN 55121
COA-28466
Structural Engineer

ROBERT D. McCAULEY
No 68037
STATE OF FLORIDA
PROFESSIONAL ENGINEER
11-2-11

Date	Scale
07 APR 10	FULL

Project No.
7545 - L.M.I.

Drawing Title
ISOMETRIC
JOINERY DETAILS
7545 SERIES
CURTAINWALL L.M.I.

Sheet No.
61/61

mparatusic - 10/Aug/11 9:18 AM