MIAMI-DADE COUNTY
BUILDING AND NEIGHBORHOOD COMPLIANCE DEPARTMENT (BNC)
BOARD AND CODE ADMINISTRATION DIVISION

MIAMI-DADE COUNTY
PRODUCT CONTROL SECTION
11805 SW 26 Street, Room 208
Miami, Florida 33175-2474
T (786) 315-2590 F (786) 315-2599
www.miamidade.gov/building/

NOTICE OF ACCEPTANCE (NOA)

PGT Industries
1070 Technology Drive
Pella, IA 50219

SCOPE:

This NOA is being issued under the applicable rules and regulations governing the use of construction materials. The documentation submitted has been reviewed by Miami-Dade County Product Control Section and accepted by the Board of Rules and Appeals (BORA) to be used in Miami Dade County and other areas where allowed by the Authority Having Jurisdiction (AHJ).

This NOA shall not be valid after the expiration date stated below. The Miami-Dade County Product Control Section (In Miami-Dade County) and/or the AHJ (in areas other than Miami-Dade County) reserve the right to have this product or material tested for quality assurance purposes. If this product or material fails to perform in the accepted manner, the manufacturer will incur the expense of such testing and the AHJ may immediately revoke, modify, or suspend the use of such product or material within their jurisdiction. BORA reserves the right to revoke this acceptance, if it is determined by Miami-Dade County Product Control Section that this product or material fails to meet the requirements of the applicable building code.

This product is approved as described herein, and has been designed to comply with the Florida Building Code, including the High Velocity Hurricane Zone.

DESCRIPTION: Series "SH-700" Aluminum Single Hung Window - L.M.I.

APPROVAL DOCUMENT: Drawing No. **4040-20**, titled "Alum. Single Hung Window, Impact", sheets 1 through 11 of 11, dated 9/1/05, with revision B dated 11/13/06, prepared by manufacturer, signed and sealed by Robert L. Clark, P.E., bearing the Miami-Dade County Product Control Renewal stamp with the Notice of Acceptance number and expiration date by the Miami-Dade County Product Control Section.

MISSILE IMPACT RATING: Large Missile Impact Resistant

LIMITATIONS: Miami–Dade County Product Control Approved Shutters Or Protection Devises Shall Be Required at installations above 30 Ft. above ground.

LABELING: Each unit shall bear a permanent label with the manufacturer's name or logo, city, state and following statement: "Miami-Dade County Product Control Approved", unless otherwise noted herein.

RENEWAL of this NOA shall be considered after a renewal application has been filed and there has been no change in the applicable building code negatively affecting the performance of this product.

TERMINATION of this NOA will occur after the expiration date or if there has been a revision or change in the materials, use, and/or manufacture of the product or process. Misuse of this NOA as an endorsement of any product, for sales, advertising or any other purposes shall automatically terminate this NOA. Failure to comply with any section of this NOA shall be cause for termination and removal of NOA.

ADVERTISEMENT: The NOA number preceded by the words Miami-Dade County, Florida, and followed by the expiration date may be displayed in advertising literature. If any portion of the NOA is displayed, then it shall be done in its entirety.

INSPECTION: A copy of this entire NOA shall be provided to the user by the manufacturer or its distributors and shall be available for inspection at the job site at the request of the Building Official.

This NOA **renews NOA # 07-0322.06** and consists of this page 1 and evidence page E-1, E-2 and E-3, as well as approval document mentioned above.

The submitted documentation was reviewed by **Manuel Perez, P.E.**

MIAMI-DADE COUNTY APPROVED

NOA No. 11-0128.03
Expiration Date: March 23, 2016
Approval Date: March 10, 2011

NOTICE OF ACCEPTANCE: EVIDENCE SUBMITTED

A. DRAWINGS

1. Manufacturer's die drawings and sections.
2. Drawing No **4040-20**, Sheets 1 through 11 of 11, titled "Alum. Single Hung Window, Impact", dated 9/1/05, with revision B dated 11/13/06, prepared by manufacturer, signed and sealed by Robert L. Clark, P.E.

B. TESTS

1. Test reports on: 1) Air Infiltration Test, per FBC, TAS 202-94
   2) Uniform Static Air Pressure Test, Loading per FBC TAS 202-94
   3) Water Resistance Test, per FBC, TAS 202-94
   4) Large Missile Impact Test per FBC, TAS 201-94
   5) Cyclic Wind Pressure Loading per FBC, TAS 203-94
   6) Forced Entry Test, per FBC 3603.2 (b) and TAS 202-94

   along with marked-up drawings and installation diagram of an aluminum single hung window, with fin frame, prepared by Fenestration Testing Laboratory, Inc., Test Report No. **FTL-4957**, dated 10/03/06, signed and sealed by Edmundo Largaespada, P.E.
   (Submitted under previous NOA #07-0322.06)
2. Test reports on: 1) Uniform Static Air Pressure Test, Loading per FBC, TAS 202-94
   2) Large Missile Impact Test per FBC, TAS 201-94
   3) Cyclic Wind Pressure Loading per FBC, TAS 203-94

   along with marked-up drawings and installation diagram of an aluminum single hung window, with fin frame, prepared by Fenestration Testing Laboratory, Inc., Test Report No. **FTL-4958**, dated 10/03/06, signed and sealed by Edmundo Largaespada, P.E.
   (Submitted under previous NOA #07-0322.06)
3. Test reports on: 1) Uniform Static Air Pressure Test, Loading per FBC, TAS 202-94
   2) Large Missile Impact Test per FBC, TAS 201-94
   3) Cyclic Wind Pressure Loading per FBC, TAS 203-94

   along with marked-up drawings and installation diagram of an aluminum single hung window, impact, prepared by Fenestration Testing Laboratory, Inc., Test Report No. **FTL-5063**, dated 11/21/06, signed and sealed by Edmundo Largaespada, P.E.
   (Submitted under previous NOA #07-0322.06)
4. Test reports on: 1) Large Missile Impact Test per FBC, TAS 201-94
   2) Cyclic Wind Pressure Loading per FBC, TAS 203-94

   along with marked-up drawings and installation diagram of Aluminum Single Hung Window, Impact, prepared by Fenestration Testing Laboratory, Test Report No. **FTL-4645**, dated 08/11/05, signed and sealed by Edmundo Largaespada, P.E.
   (Submitted under previous NOA #07-0322.06)

Manuel Perez, P.E.
Product Control Examiner
NOA No. 11-0128.03
Expiration Date: March 23, 2016
Approval Date: March 10, 2011

NOTICE OF ACCEPTANCE: EVIDENCE SUBMITTED

B. TESTS (CONTINUED)

5. Test reports on: 1) Air Infiltration Test, per FBC, TAS 202-94
2) Uniform Static Air Pressure Test, Loading per FBC TAS 202-94
3) Water Resistance Test, per FBC, TAS 202-94
4) Small Missile Impact Test per FBC, TAS 201-94
5) Cyclic Wind Pressure Loading per FBC, TAS 203-94
6) Forced Entry Test, per FBC 3603.2 (b) and TAS 202-94
along with marked-up drawings and installation diagram of an aluminum single hung window, impact, prepared by Fenestration Testing Laboratory, Inc., Test Report No. **FTL-4647**, dated 08/11/05, signed and sealed by Edmundo Largaespada, P.E.
(Submitted under previous NOA #05-1018.01)

6. Test reports on: 1) Uniform Static Air Pressure Test, Loading per FBC, TAS 202-94
2) Large Missile Impact Test per FBC, TAS 201-94
3) Cyclic Wind Pressure Loading per FBC, TAS 203-94
along with marked-up drawings and installation diagram of an aluminum single hung window, impact, prepared by Fenestration Testing Laboratory, Inc., Test Report No. **FTL-4648**, dated 08/10/05, signed and sealed by Edmundo Largaespada, P.E.
(Submitted under previous NOA #05-1018.01)

7. Test reports on: 1) Large Missile Impact Test per FBC, TAS 201-94
2) Cyclic Wind Pressure Loading per FBC, TAS 203-94
along with marked-up drawings and installation diagram of aluminum single hung window, Impact, prepared by Fenestration Testing Laboratory, Test Report No. **FTL-4649**, dated 08/11/05, signed and sealed by Edmundo Largaespada, P.E.
(Submitted under previous NOA #05-1018.01)

8. Test reports on: 1) Air Infiltration Test, per FBC, TAS 202-94
2) Uniform Static Air Pressure Test, Loading per FBC TAS 202-94
3) Water Resistance Test, per FBC, TAS 202-94
4) Small Missile Impact Test per FBC, TAS 201-94
5) Cyclic Wind Pressure Loading per FBC, TAS 203-94
6) Forced Entry Test, per FBC 3603.2 (b) and TAS 202-94
along with marked-up drawings and installation diagram of an Aluminum Single Hung Window, Impact, prepared by Fenestration Testing Laboratory, Inc., Test Report No.**FTL-4650**, dated 08/11/05, signed and sealed by Edmundo Largaespada, P.E.
(Submitted under previous NOA #05-1018.01)

9. Test reports on: 1) Large Missile Impact Test per FBC, TAS 201-94
2) Cyclic Wind Pressure Loading per FBC, TAS 203-94
along with marked-up drawings and installation diagram of Aluminum Single Hung Window, Impact, prepared by Fenestration Testing Laboratory, Test Report No. **FTL-4649**, dated 08/11/05, signed and sealed by Edmundo Largaespada, P.E.
(Submitted under previous NOA #05-1018.01)

Manuel Perez, P.E.
Product Control Examiner
NOA No. 11-0128.03
Expiration Date: March 23, 2016
Approval Date: March 10, 2011

NOTICE OF ACCEPTANCE: EVIDENCE SUBMITTED

B. TESTS (CONTINUED)

10. Test reports on: 1) Uniform Static Air Pressure Test, Loading per FBC, TAS 202-94
2) Large Missile Impact Test per FBC, TAS 201-94
3) Cyclic Wind Pressure Loading per FBC, TAS 203-94
along with marked-up drawings and installation diagram of an Aluminum Single Hung Window, Impact, prepared by Fenestration Testing Laboratory, Inc., Test Report No. **FTL-4646**, dated 08/11/05, signed and sealed by Edmundo Largaespada, P.E. ***(Submitted under previous NOA #05-1018.01)***

11. Test reports on: 1) Large Missile Impact Test per FBC, TAS 201-94
2) Cyclic Wind Pressure Loading per FBC, TAS 203-94
along with marked-up drawings and installation diagram of Aluminum Single Hung Window, Impact, prepared by Fenestration Testing Laboratory, Test Report No. **FTL-4723**, dated 10/05/05, signed and sealed by Edmundo Largaespada, P.E. ***(Submitted under previous NOA #05-1018.01)***

C. CALCULATIONS

1. Anchor Calculations and structural analysis, complying with FBC-2007, dated 12/18/06 and 1/11/11, prepared, signed and sealed by Robert L. Clark, P.E.

2. Glazing complies with ASTM E1300-04.

D. QUALITY ASSURANCE

1. Miami-Dade Building and Neighborhood Compliance Department (BNC).

E. MATERIAL CERTIFICATIONS

1. Notice of Acceptance No. **10–0922.09** issued to E.I. DuPont DeNemours & Co., Inc. for their "**DuPont Butacite® PVB, Interlayer**" dated 12/24/10, expiring on 12/11/11.

2. Notice of Acceptance No. **06-0216.06** issued to **Solutia, Inc.** for their "**Saflex IIIG Clear or colored Interlayer**" dated 05/04/06, expiring on 05/21/11.

F. STATEMENTS

1. Statement letter of conformance and no financial interest, dated 03/16/07, signed and sealed by Robert L. Clark, P.E.

2. Statement letter of code compliance, dated 01/11/11, signed and sealed by Robert L. Clark, P.E.

G. OTHERS

1. Notice of Acceptance No. **07-0322.06**, issued to PGT Industries for their Series SH-700 Aluminum Single Hung Window – L.M.I., approved on 06/07/07 and expiring on 03/23/11.

Manuel Perez, P.E.
Product Control Examiner
NOA No. 11-0128.03
Expiration Date: March 23, 2016
Approval Date: March 10, 2011

GENERAL NOTES: IMPACT SINGLE HUNG FLANGED AND INTEGRAL FIN WINDOWS

1. GLAZING OPTIONS: (SEE DETAILS ON SHEET 2)

   A. 5/16" LAMI CONSISTING OF (2) LITES OF 1/8" ANNEALED GLASS WITH A .090 DUPONT BUTACITE OR SAFLEX/KEEPSAFE MAXIMUM PVB INTERLAYER.
   B. 5/16" LAMI CONSISTING OF (1) LITE OF 1/8" ANNEALED GLASS AND (1) LITE OF 1/8" HEAT STRENGTHENED GLASS WITH A .090 DUPONT BUTACITE OR SAFLEX/KEEPSAFE MAXIMUM PVB INTERLAYER.
   C. 5/16" LAMI CONSISTING OF (2) LITES OF 1/8" HEAT STRENGTHENED GLASS WITH AN .090 DUPONT BUTACITE OR SAFLEX/KEEPSAFE MAXIMUM PVB INTERLAYER.
   D. 7/16" LAMI CONSISTING OF (2) LITES OF 3/16" ANNEALED GLASS WITH AN .090 DUPONT BUTACITE OR SAFLEX/KEEPSAFE MAXIMUM PVB INTERLAYER.
   E. 716" LAMI CONSISTING OF (1) LITE OF 3/16" ANNEALED GLASS AND (1) LITE OF 3/16" HEAT STRENGTHENED GLASS WITH AN .090 DUPONT BUTACITE OR SAFLEX/KEEPSAFE MAXIMUM PVB.
   F. 7/16" LAMI CONSISTING OF (2) LITES OF 3/16" HEAT STRENGTHENED GLASS WITH AN .090 DUPONT BUTACITE OR SAFLEX/KEEPSAFE MAXIMUM PVB INTERLAYER.
   G. 13/16" LAMI IG: (1) LITE OF 1/8" HEAT STRENGTHENED GLASS, AN AIR SPACE AND 5/16" LAMI CONSISTING OF (2) LITES OF 1/8" ANNEALED GLASS WITH A .090 DUPONT BUTACITE OR SAFLEX/KEEPSAFE MAXIMUM PVB INTERLAYER.
   H. 13/16" LAMI IG: (1) LITE OF 1/8" HEAT STRENGTHENED GLASS, AN AIR SPACE AND 516" LAMI CONSISTING OF (1) LITE OF 1/8" ANNEALED GLASS AND (1) LITE OF 1/8" HEAT STRENGTHENED GLASS WITH A .090 DUPONT BUTACITE OR SAFLEX/KEEPSAFE MAXIMUM PVB INTERLAYER.
   I. 13/16" LAMI IG: (1) LITE OF 1/8" HEAT STRENGTHENED GLASS, AN AIR SPACE AND 5/16" LAMI CONSISTING OF (2) LITES OF 1/8" HEAT STRENGTHENED GLASS WITH AN .090 DUPONT BUTACITE OR SAFLEX/KEEPSAFE MAXIMUM PVB INTERLAYER.
   J. 13/16" LAMI IG: (1) LITE OF 1/8" HEAT STRENGTHENED GLASS, AN AIR SPACE AND 7/16" LAMI CONSISTING OF (2) LITES OF 3/16" ANNEALED GLASS WITH A .090 DUPONT BUTACITE OR SAFLEX/KEEPSAFE MAXIMUM PVB INTERLAYER.
   K. 13/16" LAMI IG: (1) LITE OF 1/8" HEAT STRENGTHENED GLASS, AN AIR SPACE AND 716" LAMI CONSISTING OF (1) LITE OF 3/16" ANNEALED GLASS AND (1) LITE OF 3/16" HEAT STRENGTHENED GLASS WITH AN .090 DUPONT BUTACITE OR SAFLEX/KEEPSAFE MAXIMUM PVB.
   L. 13/16" LAMI IG: (1) LITE OF 1/8" HEAT STRENGTHENED GLASS, AN AIR SPACE AND 7/16" LAMI CONSISTING OF (2) LITES OF 3/16" HEAT STRENGTHENED GLASS WITH AN .090 DUPONT BUTACITE OR SAFLEX/KEEPSAFE MAXIMUM PVB INTERLAYER.
   B M. 13/16" LAMI IG: (1) LITE OF 1/8" ANNEALED GLASS, AN AIR SPACE AND 5/16" LAMI CONSISTING OF (2) LITES OF 1/8" ANNEALED GLASS WITH AN .090 DUPONT BUTACITE OR SAFLEX/KEEPSAFE MAXIMUM PVB INTERLAYER.

2. CONFIGURATIONS: "OX" (1/1, VIEW AND RADIUS TOP, ALL W/ LOW OR HIGH SILL OPTION)

B 3. DESIGN PRESSURES: (SEE TABLES, SHEETS 3)

   A. NEGATIVE DESIGN LOADS BASED ON TESTED PRESSURE AND GLASS TABLES ASTM E 1300-02.

   B. POSITIVE DESIGN LOADS BASED ON WATER TEST PRESSURE AND GLASS TABLES ASTM E 1300-02.

4. ANCHORAGE: THE 33 1/3% STRESS INCREASE HAS NOT BEEN USED IN THE DESIGN OF THIS PRODUCT. SEE SHEETS 8 THROUGH 11 FOR ANCHORAGE DETAILS.

5. SHUTTERS ARE NOT REQUIRED.

6. FRAME AND PANEL CORNERS SEALED WITH NARROW JOINT SEALANT OR GASKET.

B 7. REFERENCES: TEST REPORTS FTL-4645, FTL-4646, FTL-4647, FTL-4648, FTL-4649, FTL-4650, FTL-4651, FTL-4723, FTL-4957, FTL-4958 AND FTL-5063.
   ANSI/AF&PA NDS-2001 FOR WOOD CONSTRUCTION
   ADM-2000 ALUMINUM DESIGN MANUAL

8. SERIES/MODEL DESIGNATION SH700, ALSO REFERRED TO AS SH701.

B 9. THIS PRODUCT HAS BEEN DESIGNED & TESTED TO COMPLY WITH THE REQUIREMENTS OF THE FLORIDA BUILDING CODE, CURRENT EDITION INCLUDING THE HIGH VELOCITY HURRICANE ZONE (HVHZ).

NOA DRAWING MAP

	SHEET
GENERAL NOTES	1
GLAZING DETAILS	2
DESIGN PRESSURES	3
ELEVATIONS	4
VERT. SECTIONS	5
HORIZ. SECTIONS	5
PARTS LIST	6
EXTRUSIONS	7
CORNER DETAIL	7
ANCHORAGE	6-11

PRODUCT RENEWED
as complying with the Florida Building Code
Acceptance No. 11-0128.03
Expiration Date MARCH 23, 2016
By Manuel Perez
Miami-Dade Product Control

PRODUCT REVISED
as complying with the Florida Building Code
Acceptance No. 07-0322.06
Expiration Date MARCH 23, 2011
By Manuel Perez
Miami-Dade Product Control Division

3/14/07
Robert L. Clark, P.E.
PE #39712
Structural

Revsd By:	Date:	Revisions:	
Revsd By: F.K.	Date: 11/13/06	Revisions: B	CHANGE NOTES 3 & 7. ADD NOTE 9. ADD GLASS TYPE M TO NOTE 1, GLAZING OPTIONS
Revsd By: F.K.	Date: 1/24/06	Revisions: A	ADD FTL-4723 TO NOTE 7.
Drawn By: F.K.	Date: 9/1/05	Checked By: J.J.	Date: 2/23/07

1070 TECHNOLOGY DRIVE
NOKOMIS, FL 34275
P.O. BOX 1529
NOKOMIS, FL 34274

PGT Visibly Better

Description: GENERAL NOTES
Title: ALUM. SINGLE HUNG WINDOW, IMPACT

Series/Model:	Scale:	Sheet:	Drawing No.	Rev:
SH700	NTS	1 of 11	4040-20	B

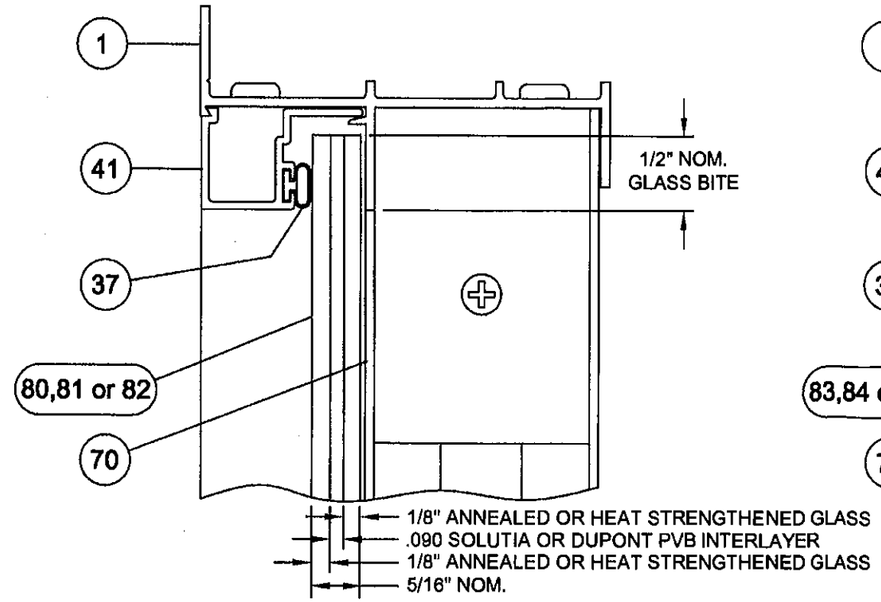

5/16" LAMINATED GLASS

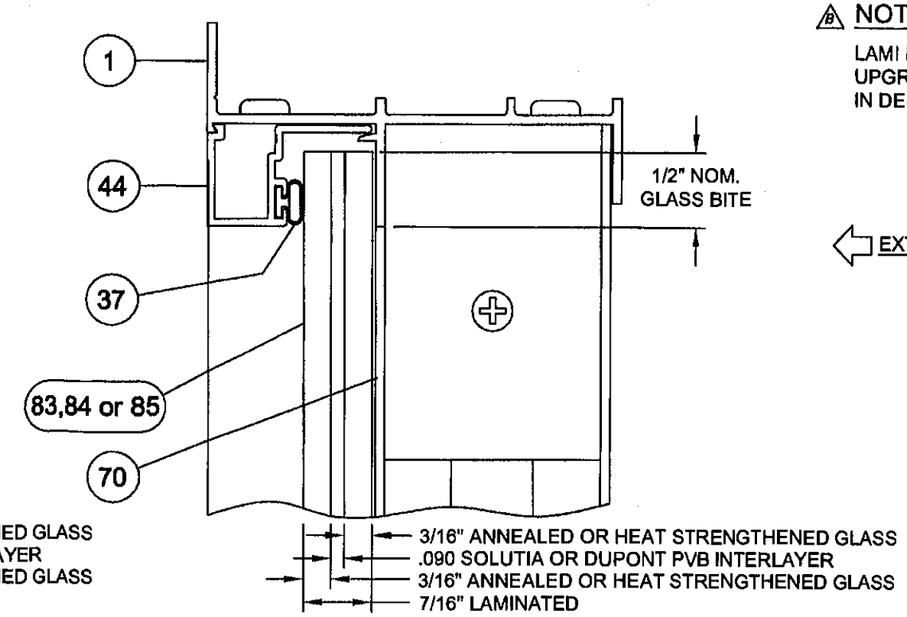

7/16" LAMINATED GLASS

B NOTE:

LAMI IG OUTBOARD LITES MAY BE UPGRADED TO 3/16" WITH NO CHANGE IN DESIGN PRESSURE.

EXTERIOR INTERIOR
(ALL SECTIONS)

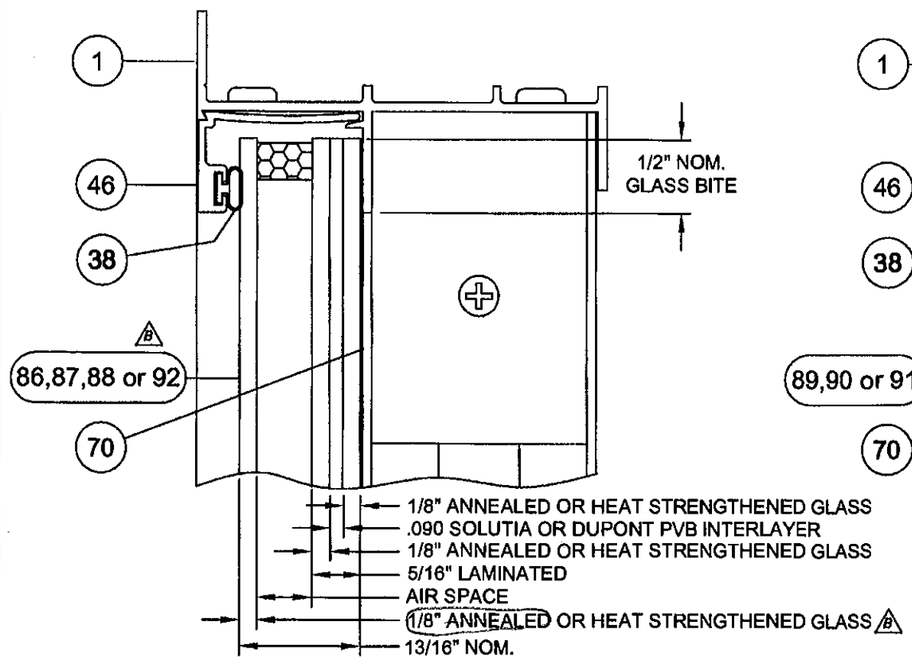

13/16" LAMI IG GLASS W/ 5/16" LAMI

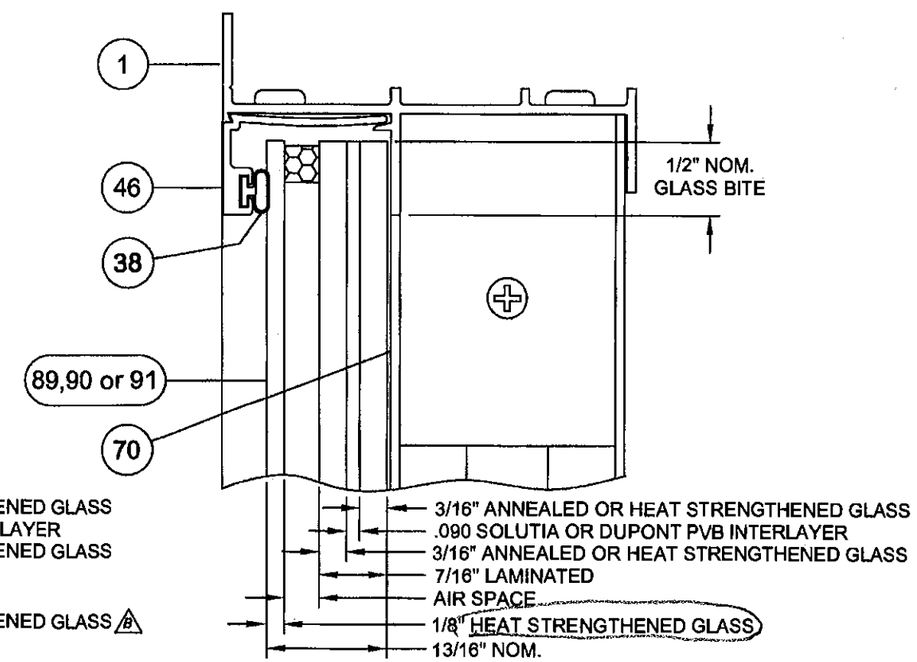

13/16" LAMI IG GLASS W/ 7/16" LAMI

PRODUCT RENEWED
as complying with the Florida Building Code
Acceptance No 11-0128.03
Expiration Date MARCH 23, 2016
By Manuel Pena
Miami Dade Product Control

PRODUCT REVISED
as complying with the Florida Building Code
Acceptance No 07-0322.06
Expiration Date MARCH 23, 2011
By Manuel Pena
Miami Dade Product Control Division

Revsd By:	Date:	Revisions:	
Revsd By: F.K.	Date: 11/13/06	Revisions: B	ADD ITEM 92 TO 5/16 LAMI I.G. GLASS (A,A,A) & LAMI IG NOTE
Revsd By: F.K.	Date: 1/24/06	Revisions: A	NO CHANGE THIS SHEET
Drawn By: F.K.	Date: 9/1/05	Checked By: J.J.	Date: 2/23/07

1070 TECHNOLOGY DRIVE
NOKOMIS, FL 34275

P.O. BOX 1529
NOKOMIS, FL 34274

PGT
Visibly Better

Description: GLAZING DETAILS

Title: ALUM. SINGLE HUNG WINDOW, IMPACT

Series/Model:	Scale:	Sheet:	Drawing No.	Rev:
SH700	Full	2 of 11	4040-20	B

3/16/07

Robert L. Clark, P.E.
PE #39712
Structural

1/1 FLANGE OR INTEGRAL FIN WINDOWS W/ HIGH SILL OPTION (B) — TABLE 1.
BASED ON FLANGED WINDOW TIP-TO-TIP FRAME DIMENSIONS

WIDTH	GLASS TYPE	WINDOW HEIGHT 63"		66"		68"		70"		72"		74"		76"	
48"	A,B,M (B)	+80.0	-80.0	+80.0	-80.0	+80.0	-80.0	+80.0	-80.0	+80.0	-80.0	+80.0	-80.0	+80.0	-80.0
50"	A,B,M (B)	+80.0	-80.0	+80.0	-80.0	+80.0	-80.0	+80.0	-80.0	+80.0	-80.0	+80.0	-80.0	+79.0	-79.0
52"	A,B,M (B)	+80.0	-80.0	+80.0	-80.0	+80.0	-80.0	+80.0	-80.0	+78.8	-78.8	+77.3	-77.3	+75.9	-75.9
53 1/8"	A,B,M (B)	+80.0	-80.0	+80.0	-80.0	+79.6	-79.6	+78.2	-78.2	+76.9	-76.9	+75.4	-75.4	+74.0	-74.0
UP TO 53 1/8"	C,D,E,F,G,H,I,J,K,L	+80.0	-80.0	+80.0	-80.0	+80.0	-80.0	+80.0	-80.0	+80.0	-80.0	+80.0	-80.0	+80.0	-80.0

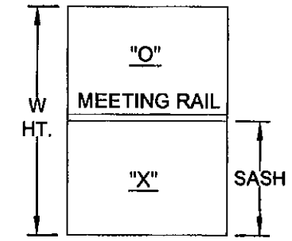

STANDARD VIEW & RADIUS TOP FLANGE OR INTEGRAL FIN WINDOWS W/ HIGH SILL OPTION (B) — TABLE 2.
BASED ON FLANGED WINDOW TIP-TO-TIP FRAME DIMENSIONS

WIDTH	GLASS TYPE	WINDOW HEIGHT 38 3/8"		44"		50 5/8"		63"		72"		74"		76"	
48"	A,B,M (B)	+80.0	-80.0	+80.0	-80.0	+80.0	-80.0	+80.0	-80.0	+70.0	-70.0	+70.0	-70.0	+70.0	-70.0
50"	A,B,M (B)	+80.0	-80.0	+80.0	-80.0	+80.0	-80.0	+79.9	-79.9	+70.0	-70.0	+70.0	-70.0	+70.0	-70.0
52"	A,B,M (B)	+80.0	-80.0	+80.0	-80.0	+80.0	-80.0	+76.9	-76.9	+70.0	-70.0	+68.8	-68.8	+67.6	-67.6
53 1/8"	A,B,M (B)	+80.0	-80.0	+80.0	-80.0	+80.0	-80.0	+75.0	-75.0	+68.0	-68.0	+66.7	-66.7	+65.5	-65.5
UP TO 53 1/8"	C,D,E,F,G,H,I,J,K,L	+80.0	-80.0	+80.0	-80.0	+80.0	-80.0	+80.0	-80.0	+70.0	-70.0	+70.0	-70.0	+70.0	-70.0

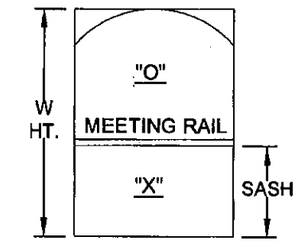

CUSTOM VIEW & RADIUS TOP FLANGE OR INTEGRAL FIN WINDOWS W/ HIGH SILL OPTION (B) — TABLE 3.
BASED ON FLANGED WINDOW TIP-TO-TIP FRAME DIMENSIONS

WIDTH	GLASS TYPE	WINDOW HEIGHT MINUS SASH HEIGHT (MAX. WINDOW HT. W/ SASH = 76" FLANGED AND 75" INTEGRAL FIN) 17 1/8"		22 11/16"		28 3/16"		33 3/4"		39 5/16"		44 13/16"		50 3/8"		55 15/16"	
53 1/8"	D,E,F,J,K,L	+80.0	-80.0	+80.0	-80.0	+80.0	-80.0	+80.0	-80.0	+70.0	-70.0	+70.0	-70.0	+70.0	-70.0	+70.0	-70.0

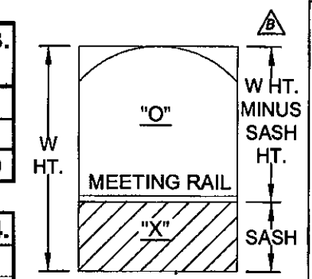

GLASS TYPES:	TEST REPORTS — TABLE 4.
A. 5/16" LAMI - (1/8"A,.090,1/8"A)	FTL-4647, 4648, 4723, 4957
B. 5/16" LAMI - (1/8"A,.090,1/8"HS)	FTL-4647, 4648
C. 5/16" LAMI - (1/8"HS,.090,1/8"HS)	FTL-4647, 4648
D. 7/16" LAMI - (3/16"A,.090, 3/16"A)	FTL-4645, 4885
E. 7/16" LAMI - (3/16"A,.090, 3/16"HS)	FTL-4645
F. 7/16" LAMI - (3/16"HS,.090, 3/16"HS)	FTL-4645
G. 13/16" LAMI IG - 1/8"HS, AIR SPACE, 5/16" LAMI - (1/8"A,.090,1/8"A)	FTL-4646, 4723
H. 13/16" LAMI IG - 1/8"HS, AIR SPACE, 5/16" LAMI - (1/8"A,.090,1/8"HS)	FTL-4646
I. 13/16" LAMI IG - 1/8"HS, AIR SPACE, 5/16" LAMI - (1/8"HS,.090,1/8"HS)	FTL-4646
J. 13/16" LAMI IG - 1/8"HS, AIR SPACE, 7/16" LAMI - (3/16"A,.090, 3/16"A)	FTL-4649, 4650
K. 13/16" LAMI IG - 1/8"HS, AIR SPACE, 7/16" LAMI - (3/16"A,.090, 3/16"HS)	FTL-4649, 4650, 4958
L. 13/16" LAMI IG - 1/8"HS, AIR SPACE, 7/16" LAMI - (3/16"HS,.090, 3/16"HS)	FTL-4649, 4650
M. 13/16" LAMI IG - 1/8"A, AIR SPACE, 5/16" LAMI - (1/8"A,.090, 1/8"A) (B)	FTL-5063

NOTES:
1. WINDOWS WITH THE LOW SILL OPTION ARE LIMITED TO A POSITIVE DESIGN PRESSURE OF +64.0 PSF OR LOWER AS SHOWN IN THE TABLES. NEGATIVE DESIGN PRESSURES ARE UNEFFECTED.
2. FOR INTEGRAL FIN WINDOW DESIGN PRESSURES USE THE ABOVE TABLES BY DEDUCTING 1" FROM THE FLANGED TIP-TO-TIP FRAME DIMENSIONS. (B)
3. AVAILABLE SASH HEIGHTS FOR CUSTOM WINDOWS ARE 12 5/8" MINIMUM TO 38" MAXIMUM. (B)

PRODUCT RENEWED
as complying with the Florida Building Code
Acceptance No. 11-0128.03
Expiration Date MARCH 23, 2016
By Manuel Perez
Miami Dade Product Control

PRODUCT REVISED
as complying with the Florida Building Code
Acceptance No. 07-0322.06
Expiration Date MARCH 23, 2011
By Manuel Perez
Miami Dade Product Control Division

Revised By:	Date:	Revisions:	
F.K.	11/13/06	B	UPDATE TO ASTM E 1300-02. REMOVE STD VIEW SASH HT REF. TABLE 2. REVISED CUSTOM FORMAT DPS. ADD INT. FIN. UPDATE TEST NOS.
F.K.	1/24/06	A	ADD FTL-4723 TO GLASS TYPES A AND G.
Drawn By: F.K.	Date: 9/1/05	Checked By: J.J.	Date: 2/23/07

1070 TECHNOLOGY DRIVE
NOKOMIS, FL 34275
P.O. BOX 1529
NOKOMIS, FL 34274

PGT Visibly Better

Description: DESIGN PRESSURES
Title: ALUM. SINGLE HUNG WINDOW, IMPACT

Series/Model:	Scale:	Sheet:	Drawing No.	Rev:
SH700	NTS	3 of 11	4040-20	B

3/16/07
Robert L. Clark, P.E.
PE #39712
Structural

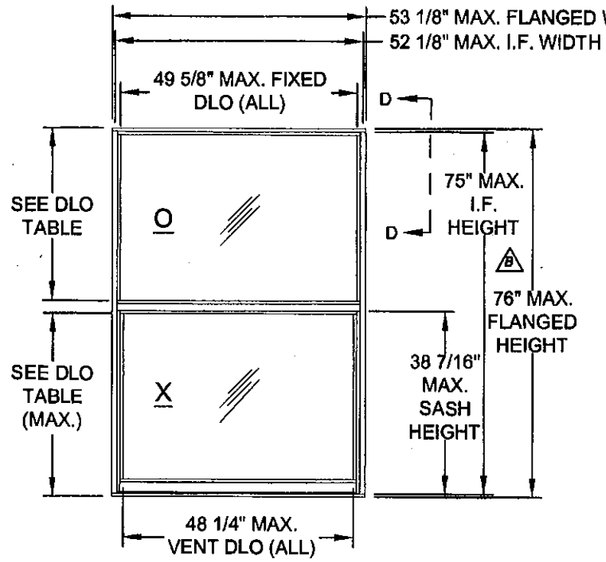

DETAIL A
1/1

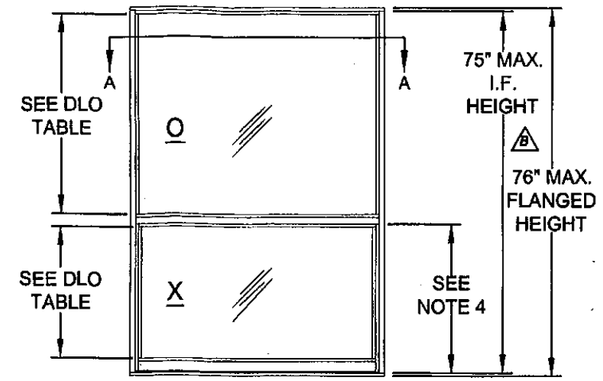

DETAIL B
VIEW (STANDARD SASH)

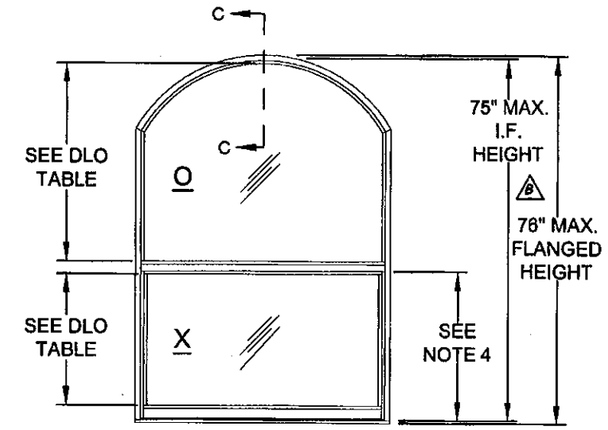

DETAIL C
RADIUS TOP (STANDARD SASH)

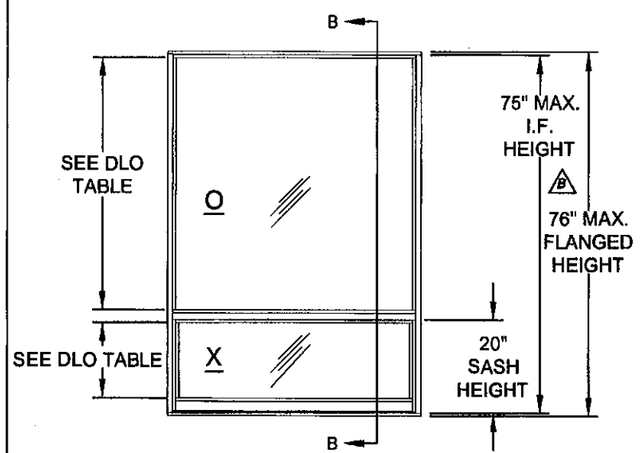

DETAIL D
VIEW (CUSTOM SASH)

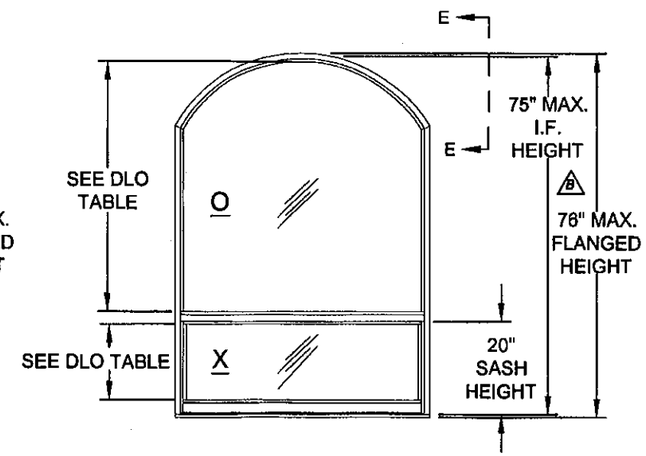

DETAIL E
RADIUS TOP (CUSTOM SASH)

VERTICAL DAYLIGHT OPENING		
	FIXED LITE	
DETAIL	LOW SILL	HIGH SILL
A	34 1/2"	34 3/16"
B	41 5/8"	41 1/4"
C	41 1/4"	40 7/8"
D	52 5/8"	52 11/16"
E	52 1/4"	52 5/16"
	SASH	
DETAIL	LOW SILL	HIGH SILL
A	34 1/2"	34 3/16"
B	27 7/16"	27 1/8"
C	27 7/16"	27 1/8"
D	16 3/8"	15 3/4"
E	16 3/8"	15 3/4"

TABLE 5.

PRODUCT RENEWED
as complying with the Florida Building Code
Acceptance No. 11-0128.03
Expiration Date MARCH 23, 2016
By Manuel Perez
Miami Dade Product Control

PRODUCT REVISED
as complying with the Florida Building Code
Acceptance No. 07-0322.06
Expiration Date MARCH 23, 2011
By Manuel Perez
Miami Dade Product Control Division

NOTES:

1. SEE SHEET 5 FOR VERTICAL AND HORIZONTAL SECTION DETAILS.
2. SEE SHEET 7 FOR CORNER DETAIL VIEWS.
3. SEE SHEETS 8 THROUGH 11 FOR ANCHORAGE INFORMATION. B
4. SASH HEIGHTS FOR STANDARD SASH WINDOWS (DETAILS B & C) ARE BASED ON A THREE OVER TWO FORMAT. B

Revised By:	Date:	Revisions:	
F.K.	11/13/06	B	ADD INTEGRAL FIN (I.F.) VERSION, CHG. NOTE 3. ADD NOTE 4.
F.K.	1/24/06	A	NO CHANGE THIS SHEET
Drawn By: F.K.	Date: 9/1/05	Checked By: J.J.	Date: 2/23/07

1070 TECHNOLOGY DRIVE
NOKOMIS, FL 34275

P.O. BOX 1529
NOKOMIS, FL 34274

PGT Visibly Better

Description: ELEVATIONS

Title: ALUM. SINGLE HUNG WINDOW, IMPACT

Series/Model:	Scale:	Sheet:	Drawing No.	Rev:
SH700	NTS	4 of 11	4040-20	B

3/6/07

Robert L. Clark, P.E.
PE #39712
Structural

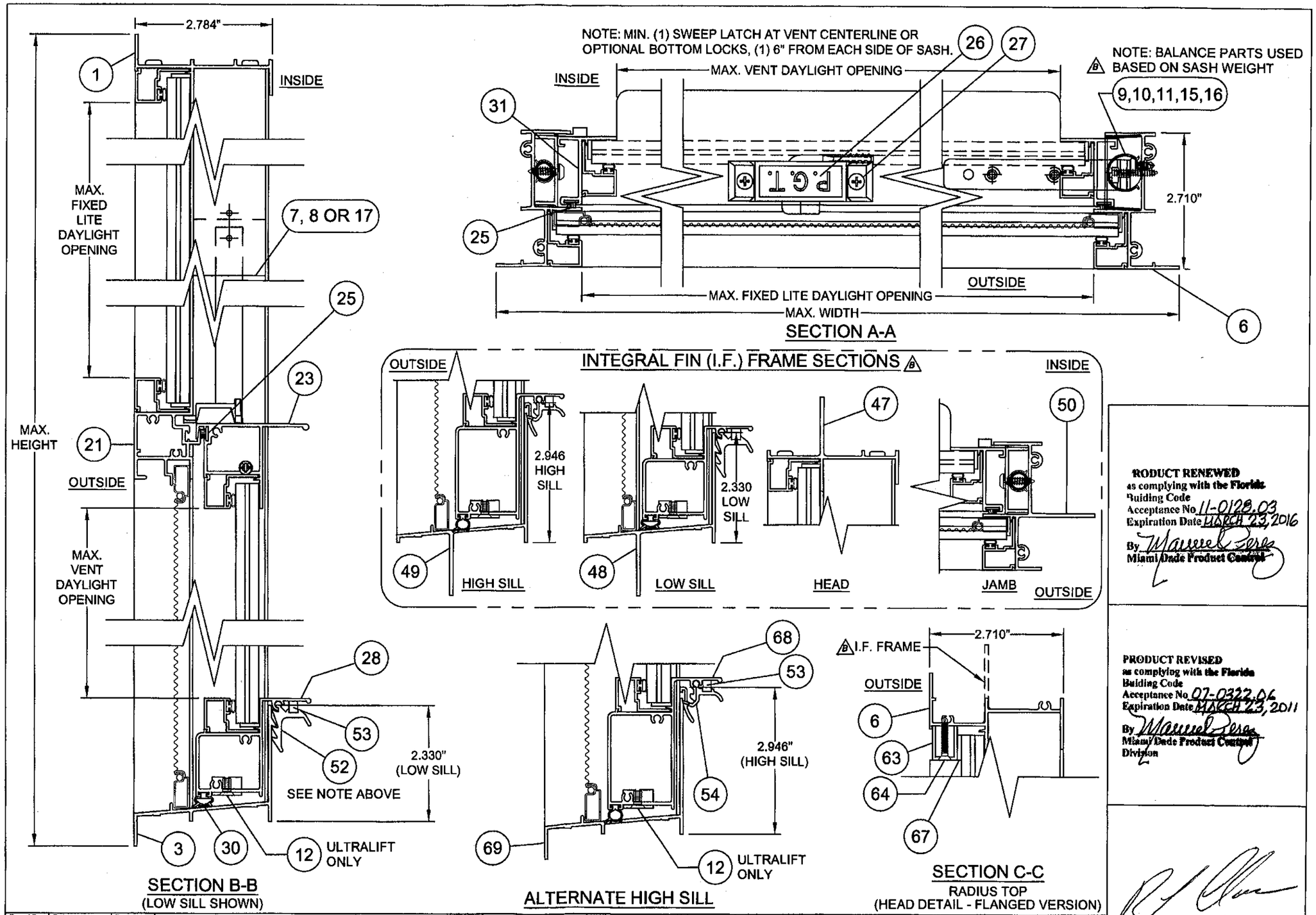

PRODUCT RENEWED
as complying with the Florida Building Code
Acceptance No. 11-0128.03
Expiration Date MARCH 23, 2016
By Manuel Perez
Miami-Dade Product Control

PRODUCT REVISED
as complying with the Florida Building Code
Acceptance No. 07-0322.06
Expiration Date MARCH 23, 2011
By Manuel Perez
Miami-Dade Product Control Division

3/16/07
Robert L. Clark, P.E.
PE #39712
Structural

Revsd By:	Date:	Revisions:	
Revsd By: F.K.	Date: 11/13/06	Revisions: B	ADD I.F. SECTIONS & CONSOLIDATE BAL. COMPONENTS
Revsd By: F.K.	Date: 1/24/06	Revisions: A	NO CHANGE THIS SHEET
Drawn By: F.K.	Date: 9/1/05	Checked By: J.J.	Date: 2/23/07

1070 TECHNOLOGY DRIVE
NOKOMIS, FL 34275

P.O. BOX 1529
NOKOMIS, FL 34274

PGT
Visibly Better

Description: SECTIONS

Title: ALUM. SINGLE HUNG WINDOW, IMPACT

Series/Model:	Scale:	Sheet:	Drawing No.	Rev:
SH700	Half	5 of 11	4040-20	B

ITEM	DWG.#	DESCRIPTION	PGT#	
1	4002A	FLANGE FRAME HEAD	612225	
2	1155	#8 X 1.000 QUAD PN. SMS	781PQA	
3	4003C	FLANGE FRAME SILL (LOW SILL)	612226	
5	1626	ADHESIVE OPEN CELL FOAM PAD	7PAD1626	
6	4004	FLANGE FRAME JAMB	612227	
7	4025	SASH STOP	612244	B
8	4025	SASH STOP (EGRESS) 1.125 LONG	612244	
9	4029	SPIRAL BALANCE, 3/8", 5/8", OR 11/16"		B
10	1080	BALANCE COVER, 3/8" OR 5/8"	6BALCVR916	B
11		#8 X .750 PH. PN. SMS	7834AA	
12		BALANCE BOTTOM BRACKET	7BALTBKT	
13	1085/1086	SASH TOP GUIDE	42504	B
15		#8 X 1 PHILLIPS FLAT HEAD S. STL	78X1FPAX	
16	1080-1	BALANCE COVER, 11/16"	6BALCVR670	B
17	4053	SASH STOP COVER	64053	
18	4029-1	SASH BRACKET	7ULBRKT	
19		#8-32 X 1/2" LG. PH. FH. TYPE F S. STL	7832X12FPFX	
21	4054C	FIXED MEETING RAIL	64054C	B
23	4006C	SASH TOP RAIL	64006	
25	1235	WSTP.,.170 X .270 BACK, FIN SEAL	67S16G	
26	1096	SWEEP LATCH	71096	
27	1016	#8 X .625 PH. FL. SMS	7858	
28	4007	SASH BOTTOM RAIL (LOW SILL)	612230	
30	1226	WSTP., BULB VINYL	6TP249	
31	4008	SASH SIDE RAIL	612231	
34	1268	SASH FACE GUIDE	42501	
35	1622	LAMI SETTING BLOCK 3/32" X 25/64" X 1"	71622K	
36	1052	LAMI IG SETTING BLOCK 1" X 3/4" X 1/16"	71052K	
37	1224	VINYL GLAZ. BEAD BULB (THICK)	6TP247W,K	
38	1225	VINYL GLAZ. BEAD BULB (THIN)	6TP248K	
41	4039B	GLAZING BEAD, 5/16 LAM. GLASS.	64039B	
42	4044B	GLAZING BEAD, 5/16 LAMI W/GRILL KIT	644703	
44	4222A	GLAZING BEAD, 7/16" LAMI	64222	
45	985C	GLAZING BEAD, 7/16" LAMI W/GRILL KIT	6985	
46	4067	GLAZING BEAD, 13/16" LAMI I.G.	64067	
47	4071A	FRAME, I.F. HEAD	64071	B
48	4072A	FRAME, I.F. LOW SILL	64072	B
49	4073A	FRAME, I.F. HIGH SILL	64073	B
50	4074B	FRAME, I.F. JAMB	64074	B
52	4009	SILL LATCH (EGRESS) (LOW SILL)	764009	
53	1088	SPRING, SILL LATCH (EGRESS)	7SPRNG	
54	2740	SILL LATCH (EGRESS) (HIGH SILL)	62740	
55	1014	SCREEN FRAME (HOR. & VER.)	61014	
56	1630	SCREEN CORNER KEY W/RINGS	71630	
57	1631	SCREEN CORNER KEY W/OUT RINGS	71631	
58	1073	SCREEN SPRING	7CASP	
59	1624	SCREEN SPLINE - .135 DIA. FOAM	61624K	

ITEM	DWG.#	DESCRIPTION	PGT#	
60	1635	SCREEN SPLINE - .135 DIA. HARD	61635K	
61		SCREEN CLOTH	61816	
63	505	GLAZING CHANNEL (.688 X .500)	6533402	
64	1161	#6 X 1.000 PH. BUGLE TEK	706X1	
67		GLAZING TAPE, 1/16 X 1/2 - 7/16 LAMI	62BV1510	
68	4051A	SASH BOTTOM RAIL (HIGH SILL)	64051	
69	4050A	FLANGE FRAME SILL (HIGH SILL)	64050	
70		SILICONE, DOW 899, 995 OR EQUIV.		
80	A. GLASS, 5/16" LAMI, (1/8"A,.090 PVB,1/8"A)			
81	B. GLASS, 5/16" LAMI, (1/8"A,.090 PVB,1/8"HS)			
82	C. GLASS, 5/16" LAMI, (1/8"HS,.090 PVB,1/8"HS)			
83	D. GLASS, 7/16" LAMI, (1/8"A,.090 PVB,1/8"A)			
84	E. GLASS, 7/16" LAMI, (1/8"A,.090 PVB,1/8"HS)			
85	F. GLASS, 7/16" LAMI, (1/8"HS,.090 PVB,1/8"HS)			
86	G. GLASS, 13/16" LAMI IG; 1/8"HS, AIR SPACE, 5/16" LAMI, (1/8"A,.090 PVB,1/8"A)			
87	H. GLASS, 13/16" LAMI IG; 1/8"HS, AIR SPACE, 5/16" LAMI, (1/8"A,.090 PVB,1/8"HS)			
88	I. GLASS, 13/16" LAMI IG; 1/8"HS, AIR SPACE, 5/16" LAMI, (1/8"HS,.090 PVB,1/8"HS)			
89	J. GLASS, 13/16" LAMI IG; 1/8"HS, AIR SPACE, 7/16" LAMI, (3/16"A,.090 PVB,3/16"A)			
90	K. GLASS, 13/16" LAMI IG; 1/8"HS, AIR SPACE, 7/16" LAMI, (3/16"A,.090 PVB,3/16"HS)			
91	L. GLASS, 13/16" LAMI IG; 1/8"HS, AIR SPACE, 7/16" LAMI, (3/16"HS,.090 PVB,3/16"HS)			
92	M. GLASS, 13/16" LAMI IG; 1/8"A, AIR SPACE, 5/16" LAMI, (1/8"A,.090 PVB,1/8"A)			B

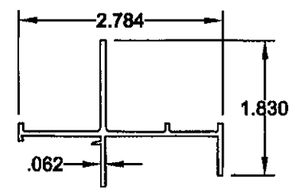

47 FRAME, I.F. HEAD
#4071A, 6063-T6

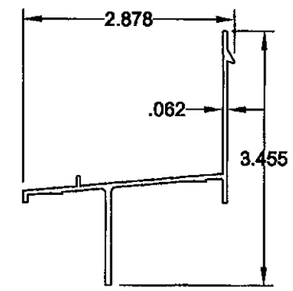

48 FRAME, I.F. LOW SILL
#4072A, 6063-T6

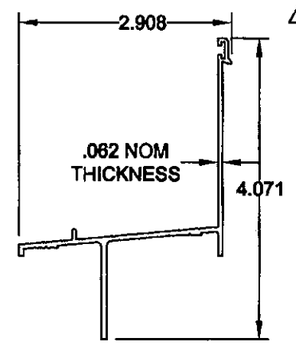

49 FRAME, I.F. HIGH SILL
#4073A, 6063-T6

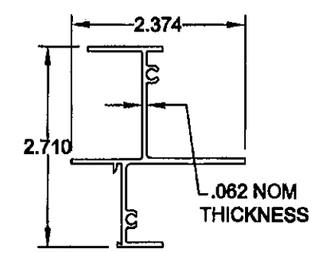

50 FRAME, I.F. JAMB
#4074B, 6063-T6
(USED AS RADIUS TOP HEAD)

PRODUCT RENEWED
as complying with the Florida
Building Code
Acceptance No 11-0128.03
Expiration Date MARCH 23, 2016
By Manuel Perez
Miami/Dade Product Control

PRODUCT REVISED
as complying with the Florida
Building Code
Acceptance No 07-0322.06
Expiration Date MARCH 23, 2011
By Manuel Perez
Miami/Dade Product Control
Division

3/16/07
Robert L. Clark, P.E.
PE #39712
Structural

Revised By:	Date:	Revisions:	
F.K.	11/13/06	B	ADD I.F. FRAME ITEMS 47, 48, 49 AND 50. UPGRADE ITEM 21. ADD ITEM 92. CHG. DESCRIPTION ITEMS 7,9 & 13
F.K.	1/24/06	A	NO CHANGE THIS SHEET
Drawn By: F.K.	Date: 9/1/05	Checked By: J.J.	Date: 2/23/07

1070 TECHNOLOGY DRIVE
NOKOMIS, FL 34275
P.O. BOX 1529
NOKOMIS, FL 34274

PGT Visibly Better

Description: PARTS LIST
Title: ALUM. SINGLE HUNG WINDOW, IMPACT

Series/Model:	Scale:	Sheet:	Drawing No.	Rev:
SH700	NTS	6 of 11	4040-20	B

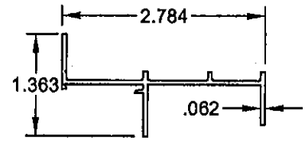

1 FLANGE FRAME HEAD
#4002A, 6063-T6

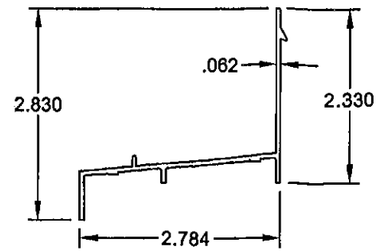

3 FLANGE FRAME SILL (LOW)
#4003C, 6063-T6

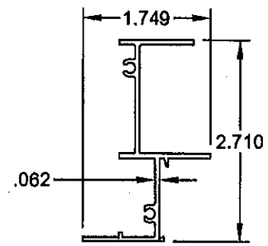

6 FLANGE FRAME JAMB
#4004, 6063-T5
(USED AS RADIUS TOP HEAD)

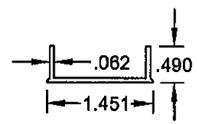

7 SASH STOP
#4025, 6063-T5

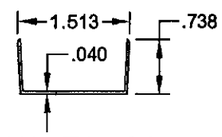

17 SASH STOP COVER
#4053, 6063-T5

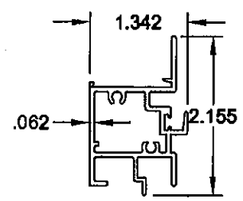

21 FIXED MEETING RAIL
#4054A, 6063HD-T6 B

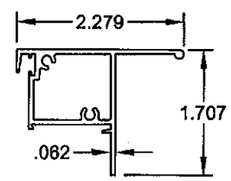

23 SASH TOP RAIL
#4006C, 6063HS-T6

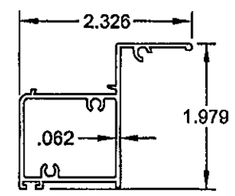

28 SASH BOTTOM RAIL (LOW)
#4007, 6063-T5

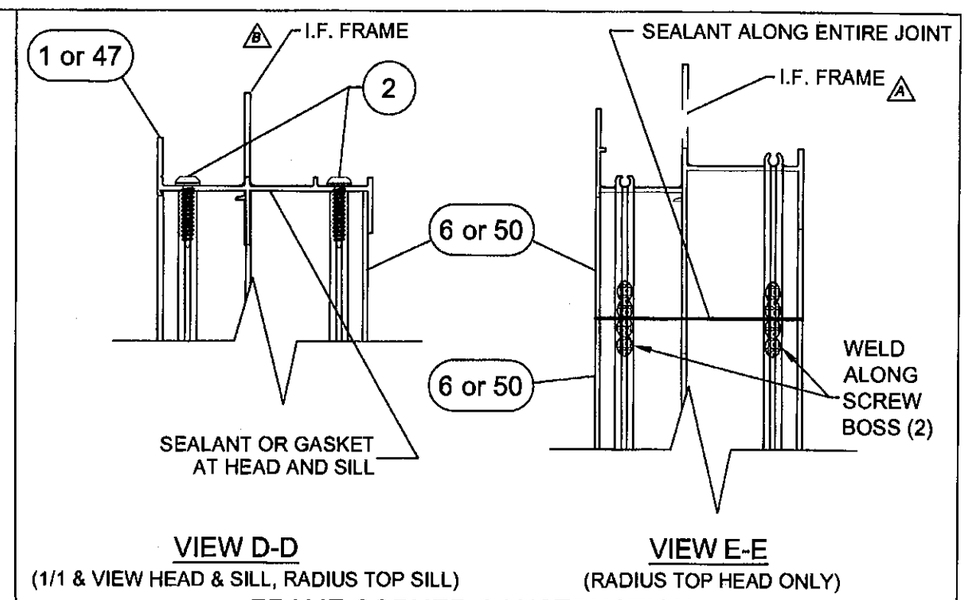

VIEW D-D
(1/1 & VIEW HEAD & SILL, RADIUS TOP SILL)

VIEW E-E
(RADIUS TOP HEAD ONLY)

FRAME CORNER CONSTRUCTION

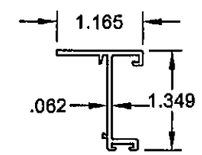

31 SASH SIDE RAIL
#4008, 6063-T5

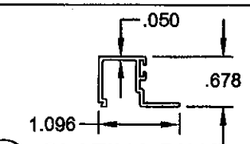

41 GLAZING BEAD, 5/16"
#4039B, 6063-T5

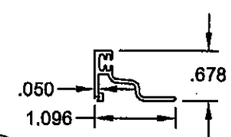

42 GLAZING BEAD, 5/16"
#4044B, 6063-T5
(USED W/ GRILL KIT)

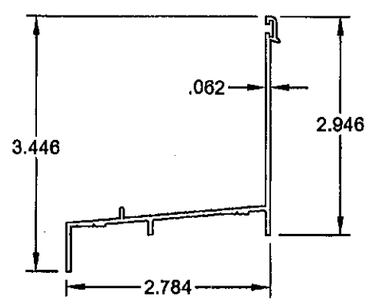

69 FLANGE FRAME SILL (HIGH)
#4050A, 6063-T6

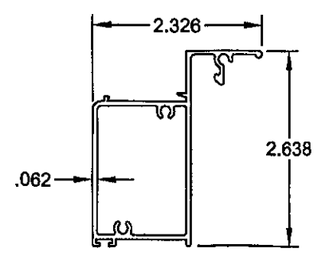

68 SASH BOTTOM RAIL (HIGH)
#4051A, 6063-T5

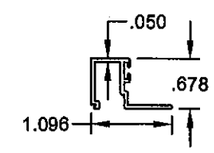

44 GLAZING BEAD 7/16"
#4222, 6063-T5

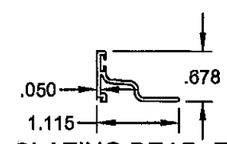

45 GLAZING BEAD, 7/16"
#985C, 6063-T5
(USED W/ GRILL KIT)

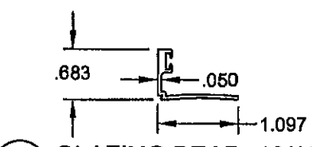

46 GLAZING BEAD, 13/16" IG
#4067, 6063-T5

PRODUCT RENEWED
as complying with the Florida Building Code
Acceptance No. 11-0128.03
Expiration Date MARCH 23, 2016
By Manuel Sera
Miami-Dade Product Control

PRODUCT REVISED
as complying with the Florida Building Code
Acceptance No. 07-0327.06
Expiration Date MARCH 23, 2011
By Manuel Sera
Miami-Dade Product Control Division

3/16/09
Robert L. Clark, P.E.
PE #39712
Structural

Revised By:	Date:	Revisions:	
F.K.	11/13/06	B	UPDATE FRAME CORNER ASSEMBLY TO INCLUDE I.F. AND UPGRADE ITEM 21 ALLOY.
F.K.	1/24/06	A	NO CHANGE THIS SHEET
Drawn By: F.K.	Date: 9/1/05	Checked By: J.J.	Date: 2/23/07

1070 TECHNOLOGY DRIVE
NOKOMIS, FL 34275

P.O. BOX 1529
NOKOMIS, FL 34274

PGT
Visibly Better

Description: EXTRUSIONS & FRAME CORNER DETAIL

Title: ALUM. SINGLE HUNG WINDOW, IMPACT

Series/Model:	Scale:	Sheet:	Drawing No.	Rev:
SH700	Half	7 of 11	4040-20	B

ANCHOR QUANTITIES FOR 1/1 FLANGED WINDOWS

TABLE 5.

WINDOW WIDTH	GLASS TYPE	WINDOW HEIGHT 28.603			34.603			40.603			46.603			52.603			58.603			64.603			76.000		
SUBSTRATE:		2,3 WOOD	2 CONC	1 CONC	2,3 WOOD	2 CONC	1 CONC	2,3 WOOD	2 CONC	1 CONC	2,3 WOOD	2 CONC	1 CONC	2,3 WOOD	2 CONC	1 CONC	2,3 WOOD	2 CONC	1 CONC	2,3 WOOD	2 CONC	1 CONC	2,3 WOOD	2 CONC	1 CONC
19.125	C,D,E,F,G, H,I,J,K,L	1 1 2	1 1 1	1 1 1	1 1 2	1 1 1	1 1 2	1 2 2	1 1 2	1 2 2	1 2 2	1 2 2	1 2 2	1 2 2	1 2 2	1 2 2	1 2 2	1 2 2	1 2 2	1 2 2	1 2 2	1 2 2	1 2 3	1 2 2	1 3 3
	A,B,M	1 1 2	1 1 1	1 1 1	1 1 2	1 1 1	1 1 2	1 2 2	1 1 2	1 2 2	1 2 2	1 2 2	1 2 2	1 2 2	1 2 2	1 2 2	1 2 2	1 2 2	1 2 2	1 2 2	1 2 2	1 2 2	1 2 3	1 2 2	1 3 3
24.000	C,D,E,F,G, H,I,J,K,L	1 1 2	1 1 1	1 1 2	1 1 2	1 1 2	1 1 2	1 2 2	1 1 2	1 2 2	1 2 2	1 2 2	1 2 2	1 2 2	1 2 2	1 2 2	1 2 3	1 2 2	1 2 2	1 2 3	1 2 2	1 2 3	1 3 3	1 2 2	1 3 3
	A,B,M	1 1 2	1 1 1	1 1 2	1 1 2	1 1 2	1 1 2	1 2 2	1 1 2	1 2 2	1 2 2	1 2 2	1 2 2	1 2 2	1 2 2	1 2 2	1 2 3	1 2 2	1 2 2	1 2 3	1 2 2	1 2 3	1 3 3	1 2 2	1 3 3
32.000	C,D,E,F,G, H,I,J,K,L	1 1 2	1 1 2	1 2 2	1 2 3	1 1 2	1 2 2	1 2 3	1 1 2	1 2 3	1 2 3	1 2 2	1 2 3	1 2 3	1 2 2	1 2 3	2 3 3	1 2 2	1 3 3	2 3 4	1 3 2	1 3 3	2 3 4	1 3 3	1 4 4
	A,B,M	1 1 2	1 1 2	1 2 2	1 2 3	1 1 2	1 2 2	1 2 3	1 1 2	1 2 3	1 2 3	1 2 2	1 2 3	1 2 3	1 2 2	1 2 3	1 3 3	1 2 2	1 3 3	1 3 4	1 3 2	1 3 3	1 3 4	1 3 3	1 4 4
37.000	C,D,E,F,G, H,I,J,K,L	1 2 2	1 1 2	1 2 2	1 2 3	1 1 2	1 2 3	2 2 3	1 2 2	1 2 3	2 2 3	1 2 2	2 2 3	2 2 3	1 2 3	2 2 3	2 3 4	1 2 3	2 3 3	2 3 4	1 3 3	2 3 4	2 3 5	1 3 3	2 4 4
	A,B,M	1 2 2	1 1 2	1 2 2	1 2 3	1 1 2	1 2 3	2 2 3	1 2 2	1 2 3	2 2 3	1 2 2	2 2 3	2 2 3	1 2 3	2 2 3	2 3 4	1 2 3	2 3 3	2 3 4	1 3 3	2 3 4	2 3 5	1 3 3	2 4 4
40.000	PSF	79																							
	C,D,E,F,G, H,I,J,K,L	2 2 2	2 1 2	2 2 2	2 2 3	2 2 2	2 2 3	2 2 3	2 2 2	2 2 3	2 2 3	2 2 3	2 2 3	2 2 4	2 2 3	2 3 3	2 3 4	2 2 3	2 3 4	2 3 5	2 3 3	2 3 4	2 4 5	2 3 3	2 4 4
	A,B,M	2 2 2	2 1 2	2 2 2	2 2 3	2 2 2	2 2 3	2 2 3	2 2 2	2 2 3	2 2 3	2 2 3	2 2 3	2 2 4	2 2 3	2 3 3	2 3 4	2 2 3	2 3 4	2 3 5	2 3 3	2 3 4	2 4 5	2 3 3	2 4 4
44.000	PSF	79																							
	C,D,E,F,G, H,I,J,K,L	2 2 2	2 2 2	2 2 2	2 2 3	2 2 2	2 2 3	2 2 3	2 2 2	2 3 3	2 2 4	2 2 3	2 3 3	2 3 4	2 2 3	2 3 3	2 3 4	2 2 3	2 3 4	2 3 5	2 3 3	2 3 4	2 4 5	2 3 4	2 4 5
	A,B,M	2 2 2	2 2 2	2 2 2	2 2 3	2 2 2	2 2 3	2 2 3	2 2 2	2 3 3	2 2 4	2 2 3	2 3 3	2 3 4	2 2 3	2 3 3	2 3 4	2 2 3	2 3 4	2 3 5	2 3 3	2 3 4	2 4 5	2 3 4	2 4 5
48.000	PSF	79		79																					
	C,D,E,F,G, H,I,J,K,L	2 2 2	2 2 2	2 2 2	2 2 3	2 2 2	2 2 3	2 3 4	2 2 3	2 3 3	2 3 4	2 2 3	2 3 4	2 3 4	2 2 3	2 3 4	2 3 5	2 3 3	2 3 4	3 3 5	2 3 3	2 4 5	3 4 6	2 3 4	2 5 5
	A,B,M	2 2 2	2 2 2	2 2 2	2 2 3	2 2 2	2 2 3	2 3 4	2 2 3	2 3 3	2 3 4	2 2 3	2 3 4	2 3 4	2 2 3	2 3 4	2 3 5	2 3 3	2 3 4	3 3 5	2 3 3	2 4 5	3 4 6	2 3 4	2 5 5
53.125	PSF	72		79	79																				
	C,D,E,F,G, H,I,J,K,L	2 2 2	2 2 2	2 2 2	2 2 3	2 2 2	2 2 3	2 3 4	2 2 3	2 3 4	2 3 4	2 2 3	2 3 4	3 3 4	2 3 3	2 3 4	3 3 5	2 3 3	2 4 4	3 4 6	2 3 4	3 4 5	3 4 6	2 3 4	3 5 6
	A,B,M	2 2 2	2 2 2	2 2 2	2 2 3	2 2 2	2 2 3	2 3 4	2 2 3	2 3 4	2 3 4	2 2 3	2 3 4	3 3 4	2 3 3	2 3 4	3 3 5	2 3 3	2 4 4	3 4 5	2 3 3	2 4 5	3 4 6	2 3 4	3 4 5

ANCHORAGE NOTES:

1. ANCHOR TYPES: 1 - 1/4" ELCO TAPCONS
   2 - 1/4" ELCO SS4 CRETE-FLEX
   3 - #12 SCREWS
2. ANCHOR LOCATIONS ARE BASED ON THE FOLLOWIING DIMENSIONS.
   HEAD - 18 1/2" MAX. FROM TOP CORNERS
   JAMBS - 17 1/2" MAX. FROM TOP CORNERS
   15" MAX. FROM BOTTOM CORNERS
   6" MAX. BELOW MTG. RAIL
   SILL - ANCHORS NOT REQUIRED
3. INSTALL PER THE ADJACENT TABLE ANCHOR QUANTITIES USING THE DIMENSIONAL CRITERIA OF NOTE 2.
4. TABLE WIDTH AND HEIGHT DIMENSION ARE FOR FLANGED WINDOWS. INTEGRAL FIN DIMENSIONS ARE 1" LESS.
5. DESIGN PRESSURE LIMITATIONS:
   SIZE BLOCKS OF THE ADJACENT TABLE WITH A BOLD ITALICIZED VALUE ABOVE THEM, INDICATE A MAXIMUM DESIGN PRESSURE WITH THE QUANTITY OF ANCHORS SHOWN IN BOLD. OTHERWISE, THE MAXIMUM DESIGN PRESSURE FOR THE RESPECTIVE SIZE AND GLASS TYPE IS AVAILABLE.

PRODUCT RENEWED
as complying with the Florida Building Code
Acceptance No. 11-0128.03
Expiration Date MARCH 23, 2016
By Manuel Perez
Miami Dade Product Control

TABLE KEY:

	MAX. PSF
(DP LIMITED)	118
HEAD	2
JAMB ABOVE MTG. RAIL	2 3
JAMB BELOW MTG. RAIL	

(FULL DP)	
HEAD	2
JAMB ABOVE MTG. RAIL	2 3
JAMB BELOW MTG. RAIL	

PRODUCT REVISED
as complying with the Florida Building Code
Acceptance No. 07-0322.06
Expiration Date MARCH 23, 2011
By Manuel Perez
Miami Dade Product Control Division

Revised By:	Date:	Revisions:	
F.K.	11/13/06	B	REVISE ANCHORAGE TABLE AND NOTES. ADD DP MAX. WHERE ANCHOR QTY IS RESTRICTED BY SIZE.
F.K.	1/24/06	A	NO CHANGE THIS SHEET
Drawn By: F.K.	Date: 7/29/05	Checked By: J.J.	Date: 2/23/07

1070 TECHNOLOGY DRIVE
NOKOMIS, FL 34275

P.O. BOX 1529
NOKOMIS, FL 34274

PGT
Visibly Better

Description: ANCHORAGE SPACING, 1/1 WINDOWS
Title: ALUM. SINGLE HUNG WINDOW, IMPACT

Series/Model:	Scale:	Sheet:	Drawing No.	Rev:
SH700	NTS	8 of 11	4040-20	B

3/6/07
Robert L. Clark, P.E.
PE #39712
Structural

ANCHOR QUANTITIES FOR STANDARD VIEW AND RADIUS TOP FLANGED WINDOWS

TABLE 6.

WINDOW WIDTH	GLASS TYPE	WINDOW HEIGHT 29.655			37.155			44.655			52.155			59.655			67.155			74.655			76.000		
SUBSTRATE:		2,3 WOOD	2 CONC	1 CONC	2,3 WOOD	2 CONC	1 CONC	2,3 WOOD	2 CONC	1 CONC	2,3 WOOD	2 CONC	1 CONC	2,3 WOOD	2 CONC	1 CONC	2,3 WOOD	2 CONC	1 CONC	2,3 WOOD	2 CONC	1 CONC	2,3 WOOD	2 CONC	1 CONC
19.125	C,D,E,F,G,H,I,J,K,L	1	1	1	1	1	1	1	1	1	1	1	1	1	1	1	1	1	1	1	1	1	1	1	1
		1 1	1 1	1 1	2 2	2 1	2 2	2 2	2 1	2 2	2 2	2 2	2 2	2 2	2 2	2 2	2 2	2 2	2 2	3 2	2 2	3 2	3 2	2 2	3 2
	A,B,M	1	1	1	1	1	1	1	1	1	1	1	1	1	1	1	1	1	1	1	1	1	1	1	1
		1 1	1 1	1 1	2 2	2 1	2 2	2 2	2 1	2 2	2 2	2 2	2 2	2 2	2 2	2 2	2 2	2 2	2 2	3 2	2 2	3 2	3 2	2 2	3 2
24.000	PSF	***79***																							
	C,D,E,F,G,H,I,J,K,L	**1**	1	1	1	1	1	1	1	1	1	1	1	1	1	1	1	1	1	1	1	1	1	1	1
		1 **1**	1 1	1 1	2 2	1 1	2 2	2 2	2 2	2 2	2 2	2 2	2 2	2 2	2 2	3 2	3 2	2 2	3 2	3 2	2 2	3 2	3 2	2 2	3 2
	A,B,M	**1**	1	1	1	1	1	1	1	1	1	1	1	1	1	1	1	1	1	1	1	1	1	1	1
		1 **1**	1 1	1 1	2 2	1 1	2 2	2 2	2 2	2 2	2 2	2 2	2 2	2 2	2 2	3 2	3 2	2 2	3 2	3 2	2 2	3 2	3 2	2 2	3 2
32.000	PSF	***68***		***77***																					
	C,D,E,F,G,H,I,J,K,L	**1**	1	**1**	1	1	1	1	1	1	2	1	1	2	1	1	1	1	1	1	1	1	1	1	1
		1 **1**	1 1	**1** **1**	2 2	2 2	2 2	2 3	2 2	2 2	3 3	2 2	3 3	3 3	3 2	3 3	3 3	2 2	3 3	4 3	3 2	4 3	4 3	3 2	4 3
	A,B,M	**1**	1	**1**	1	1	1	1	1	1	2	1	1	2	1	1	1	1	1	1	1	1	1	1	**1**
		1 **1**	1 1	**1** **1**	2 2	2 2	2 2	2 3	2 2	2 2	3 3	2 2	3 3	3 3	3 2	3 3	3 3	2 2	3 3	4 3	3 2	4 3	4 3	3 2	4 3
37.000	PSF	***59***		***67***	***79***																				
	C,D,E,F,G,H,I,J,K,L	**1**	1	**1**	**2**	1	**1**	2	1	2	2	1	2	2	1	2	2	1	2	2	1	2	2	1	2
		1 **1**	1 1	**1** **1**	**2** **2**	2 2	2 2	2 3	2 2	2 3	3 3	2 2	3 3	3 3	3 3	4 3	3 3	3 2	3 3	4 3	3 2	4 3	4 4	3 2	4 3
	A,B,M	**1**	1	**1**	**2**	1	**1**	2	1	2	2	1	2	2	1	2	2	1	2	2	1	2	2	1	2
		1 **1**	1 1	**1** **1**	**2** **2**	2 2	2 2	2 3	2 2	2 3	3 3	2 2	3 3	3 3	3 3	4 3	3 3	3 2	3 3	4 3	3 2	4 3	4 4	3 2	4 3
40.000	PSF	***54***	***79***	***62***	***79***																				
	C,D,E,F,G,H,I,J,K,L	**2**	**2**	**2**	**2**	2	2	2	2	2	2	2	2	2	2	2	2	2	2	2	2	2	2	2	2
		1 **1**	**1** **1**	**1** **1**	**2** **2**	2 2	2 2	2 3	2 2	3 3	3 3	2 2	3 3	4 3	3 3	4 3	3 3	3 3	4 3	4 4	3 3	4 3	4 4	3 3	5 3
	A,B,M	**2**	**2**	**2**	**2**	2	2	2	2	2	2	2	2	2	2	2	2	2	2	2	2	2	2	2	2
		1 **1**	**1** **1**	**1** **1**	**2** **2**	2 2	2 2	2 3	2 2	3 3	3 3	2 2	3 3	4 3	3 3	4 3	3 3	3 3	4 3	4 4	3 3	4 3	4 4	3 3	5 3
44.000	PSF	***49***	***79***	***56***	***79***		**79**																		
	C,D,E,F,G,H,I,J,K,L	**2**	**2**	**2**	**2**	2	**2**	2	2	2	2	2	2	2	2	2	2	2	2	2	2	2	2	2	2
		1 **1**	**1** **1**	**1** **1**	**2** **2**	2 2	**2** **2**	3 3	2 2	3 3	3 4	2 3	3 3	4 4	3 3	4 3	4 4	3 3	4 3	4 4	3 3	4 3	4 4	3 3	5 4
	A,B,M	**2**	**2**	**2**	**2**	2	**2**	2	2	2	2	2	2	2	2	2	2	2	2	2	2	2	2	2	2
		1 **1**	**1** **1**	**1** **1**	**2** **2**	2 2	**2** **2**	3 3	2 2	3 3	3 4	2 3	3 3	4 4	3 3	4 3	4 4	3 3	4 3	4 4	3 3	4 3	4 4	3 3	5 4
48.000	PSF	***45***	***74***	***51***	***74***		**79**	**79**																	
	C,D,E,F,G,H,I,J,K,L	**2**	**2**	**2**	**2**	2	**2**	**2**	2	2	2	2	2	3	2	2	2	2	2	3	2	2	3	2	2
		1 **1**	**1** **1**	**1** **1**	**2** **2**	2 2	**2** **2**	3 3	2 2	3 3	3 4	3 3	3 3	4 4	3 3	4 4	4 4	3 3	4 4	4 4	4 3	5 4	4 4	4 3	5 4
	A,B,M	**2**	**2**	**2**	**2**	2	**2**	**2**	2	2	2	2	2	3	2	2	2	2	2	3	2	2	3	2	2
		1 **1**	**1** **1**	**1** **1**	**2** **2**	2 2	**2** **2**	3 3	2 2	3 3	3 4	3 3	3 3	4 4	3 3	4 4	4 4	3 3	4 4	4 4	4 3	5 4	4 4	4 3	5 4
53.125	PSF	***41***	***67***	***46***	***67***		**76**	**79**																	
	C,D,E,F,G,H,I,J,K,L	**2**	**2**	**2**	**2**	2	**2**	3	2	2	3	2	3	3	2	3	3	2	3	3	2	3	3	2	3
		1 **1**	**1** **1**	**1** **1**	**2** **2**	2 2	**2** **2**	3 3	3 3	3 3	4 4	3 3	4 4	4 4	3 3	4 4	4 4	3 3	4 4	5 5	4 3	5 4	5 5	4 3	5 4
	A,B,M	**2**	**2**	**2**	**2**	2	**2**	3	2	2	3	2	3	3	2	3	3	2	2	3	2	3	3	2	3
		1 **1**	**1** **1**	**1** **1**	**2** **2**	2 2	**2** **2**	3 3	3 3	3 3	4 4	3 3	4 4	4 4	3 3	4 4	4 4	3 3	4 4	5 4	4 3	5 4	5 4	4 3	5 4

ANCHORAGE NOTES:

1. ANCHOR TYPES: 1 - 1/4" ELCO TAPCONS
   2 - 1/4" ELCO SS4 CRETE-FLEX
   3 - #12 SCREWS
2. ANCHOR LOCATIONS ARE BASED ON THE FOLLOWING DIMENSIONS:
   HEAD - 18 1/2" MAX. FROM TOP CORNERS
   JAMBS - 17 1/2" MAX. FROM TOP CORNERS
   15" MAX. FROM BOTTOM CORNERS
   6" MAX. BELOW MTG. RAIL
   SILL - ANCHORS NOT REQUIRED
3. INSTALL PER THE ADJACENT TABLE ANCHOR QUANTITIES USING THE DIMENSIONAL CRITERIA OF NOTE 2.
4. TABLE WIDTH AND HEIGHT DIMENSION ARE FOR FLANGED WINDOWS. INTEGRAL FIN DIMENSIONS ARE 1" LESS.
5. DESIGN PRESSURE LIMITATIONS:
   SIZE BLOCKS OF THE ADJACENT TABLE WITH A BOLD ITALICIZED VALUE ABOVE THEM, INDICATE A MAXIMUM DESIGN PRESSURE WITH THE QUANTITY OF ANCHORS SHOWN IN BOLD. OTHERWISE, THE MAXIMUM DESIGN PRESSURE FOR THE RESPECTIVE SIZE AND GLASS TYPE IS AVAILABLE.

TABLE KEY:

	MAX. PSF
(DP LIMITED)	***117***
HEAD	**3**
JAMB ABOVE MTG. RAIL	**3** **3**
JAMB BELOW MTG. RAIL	
(FULL DP)	
HEAD	2
JAMB ABOVE MTG. RAIL	2 2
JAMB BELOW MTG. RAIL	

RODUCT RENEWED
as complying with the Florida Building Code
Acceptance No. 11-0128.03
Expiration Date MARCH 23, 2016
By Manuel Seres
Miami/Dade Product Control

PRODUCT REVISED
as complying with the Florida Building Code
Acceptance No. 07-0322.06
Expiration Date MARCH 23, 2011
By Manuel Seres
Miami/Dade Product Control Division

Revsd By:	Date:	Revisions:	
Revsd By: F.K.	Date: 11/13/06	Revisions: B	REVISE ANCHORAGE TABLE AND NOTES. ADD DP MAX. WHERE ANCHOR QTY IS RESTRICTED BY SIZE.
Revsd By: F.K.	Date: 1/24/06	Revisions: A	NO CHANGE THIS SHEET
Drawn By: F.K.	Date: 7/29/05	Checked By: J.J.	Date: 2/23/07

1070 TECHNOLOGY DRIVE
NOKOMIS, FL 34275
P.O. BOX 1529
NOKOMIS, FL 34274

PGT Visibly Better

Description: ANCHORAGE SPACING, STANDARD VIEW

Title: ALUM. SINGLE HUNG WINDOW, IMPACT

Series/Model:	Scale:	Sheet:	Drawing No.	Rev:
SH700	NTS	9 of 11	4040-20	B

3/6/07
Robert L. Clark, P.E.
PE #39712
Structural

ANCHOR QUANTITIES ABOVE MEETING RAIL (HEAD & JAMBS), CUSTOM FLANGED WINDOW HEIGHT MINUS SASH HEIGHT TABLE 7.

WINDOW HEIGHT MINUS SASH HEIGHT FROM TABLE 8.

SUBSTRATE:		17.125			22.668			28.211			33.754			39.296			44.839			50.382			55.925		
ANCHOR TYPE:		2,3 WOOD	2 CONC	1 CONC	2,3 WOOD	2 CONC	1 CONC	2,3 WOOD	2 CONC	1 CONC	2,3 WOOD	2 CONC	1 CONC	2,3 WOOD	2 CONC	1 CONC	2,3 WOOD	2 CONC	1 CONC	2,3 WOOD	2 CONC	1 CONC	2,3 WOOD	2 CONC	1 CONC
WINDOW WIDTH	GLASS TYPE																								
19.125	D,E,F,J,	1	1	1	1	1	1	1	1	1	1	1	1	1	1	1	1	1	1	1	1	1	1	1	1
	K,L	1	1	1	2	2	2	2	2	2	2	2	2	2	2	2	3	2	3	3	2	3	3	3	3
24.000	D,E,F,J,	1	1	1	1	1	1	1	1	1	1	1	1	1	1	1	1	1	1	1	1	1	1	1	1
	K,L	1	1	1	2	2	2	2	2	2	2	2	3	3	2	3	3	2	3	3	3	3	3	3	4
32.000	D,E,F,J,	1	1	1	1	1	1	2	1	1	2	1	1	1	1	1	1	1	1	1	1	1	1	1	1
	K,L	1	1	1	2	2	2	3	2	3	3	3	3	3	2	3	4	3	4	4	3	4	5	3	5
37.000	PSF						***79***																		
	D,E,F,J,	1	1	1	2	1	**2**	2	1	2	2	1	2	2	1	2	2	1	2	2	1	2	2	1	2
	K,L	1	1	1	2	2	**2**	3	2	3	3	3	4	3	3	3	4	3	4	4	4	5	5	4	5
40.000	PSF			***79***	***79***		***79***			***79***															
	D,E,F,J,	2	2	**2**	**2**	2	**2**	2	2	**2**	2	2	2	2	2	2	2	2	2	2	2	2	2	2	2
	K,L	1	1	**1**	**2**	2	**2**	3	3	**3**	4	3	4	4	3	4	4	3	5	4	4	5	5	4	6
44.000	PSF	***79***		***76***	***79***		***77***	***79***		***79***			***79***												
	D,E,F,J,	**2**	2	**2**	**2**	2	**2**	**2**	2	**2**	2	2	**2**	2	2	2	2	2	2	2	2	2	2	2	2
	K,L	**1**	1	**1**	**2**	2	**2**	**3**	3	**3**	4	4	**4**	4	3	5	4	3	5	5	4	5	5	4	6
48.000	PSF	***78***	***79***	***70***	***79***	***79***	***71***	***79***		***73***			***76***												
	D,E,F,J,	**2**	**2**	**2**	**2**	**2**	**2**	**2**	2	**2**	3	2	**2**	2	2	2	3	2	2	3	2	2	3	2	2
	K,L	**1**	**1**	**1**	**2**	**2**	**2**	**3**	3	**3**	4	4	**4**	5	4	5	5	4	6	5	4	6	6	5	6
53.125	PSF	***71***	***79***	***63***	***71***	***79***	***64***	***74***		***66***	***77***		***69***						***69***						
	D,E,F,J,	**2**	**2**	**2**	**2**	**2**	**2**	**3**	2	**2**	**3**	2	**3**	3	2	3	3	2	**3**	3	2	3	3	2	3
	K,L	**1**	**1**	**1**	**2**	**2**	**2**	**3**	3	**3**	**4**	4	**4**	5	4	5	6	5	**6**	6	5	7	6	5	7

ANCHOR QUANTITIES AT JAMBS BELOW MEETING RAIL, CUSTOM FLANGED WINDOWS BASED ON SASH HT.

TABLE 8.

SASH HEIGHT

SUBSTRATE:	12.776			15.776			18.776			21.776			24.776			27.776			30.776			31.106		
ANCHOR TYPE:	2,3 WOOD	2 CONC	1 CONC	2,3 WOOD	2 CONC	1 CONC	2,3 WOOD	2 CONC	1 CONC	2,3 WOOD	2 CONC	1 CONC	2,3 WOOD	2 CONC	1 CONC	2,3 WOOD	2 CONC	1 CONC	2,3 WOOD	2 CONC	1 CONC	2,3 WOOD	2 CONC	1 CONC
WINDOW WIDTH																								
19.125	1	1	1	2	1	2	2	1	2	2	2	2	2	2	2	2	2	2	2	2	2	2	2	2
24.000	2	1	1	2	1	2	2	2	2	2	2	2	2	2	2	2	2	2	3	2	2	3	2	2
32.000	2	1	2	2	2	2	3	2	2	3	2	3	3	2	3	3	2	3	4	2	3	4	2	3
37.000				***79***																				
	2	1	2	**2**	2	2	3	2	3	3	2	3	3	3	3	3	3	3	4	3	3	4	3	4
40.000				***74***																				
	2	2	2	**2**	2	2	3	2	3	3	2	3	3	3	3	4	3	3	4	3	**4**	4	3	4
44.000				***68***		***78***																		
	2	2	2	**2**	2	**2**	3	2	3	3	3	3	4	3	3	4	3	4	5	3	4	5	3	4
48.000				***63***		***72***	***79***																	
	2	2	2	**2**	2	**2**	**3**	2	3	4	3	3	4	3	4	4	3	4	5	3	4	5	3	4
53.125	***73***			***58***		***66***	***72***																	
	2	2	2	**2**	2	**2**	**3**	3	3	4	3	4	4	3	4	5	3	4	5	3	5	5	3	5

ANCHORAGE NOTES:

1. ANCHOR TYPES: 1 - 1/4" ELCO TAPCONS
   2 - 1/4" ELCO SS4 CRETE-FLEX
   3 - #12 SCREWS
2. ANCHOR LOCATIONS ARE BASED ON THE FOLLOWIING B DIMENSIONS:
   HEAD - 18 1/2" MAX. FROM CORNERS
   JAMBS - 17 1/2" MAX. FROM TOP CORNERS
   11 1/2" MAX. ABOVE THE MEETING RAIL
   6" MAX. BELOW MTG. RAIL
   15" MAX. FROM BOTTOM CORNERS
   SILL - ANCHORS NOT REQUIRED
3. DETERMINE THE ANHCOR QUANTITIES FOR CUSTOM B VIEW WINDOWS FROM TABLES 7. AND 8. USING THE DIMENSIONAL CRITERIA OF NOTE 2. USE TABLE 7. FOR ABOVE THE MEETING RAIL AND TABLE 8. FOR BELOW.
4. AVAILABLE SASH HEIGHTS FOR CUSTOM VIEW B WINDOWS ARE 12 5/8" MIN. TO 38" MAX.
5. TABLE WIDTH AND HEIGHT DIMENSION ARE FOR B FLANGED WINDOWS. INTEGRAL FIN DIMENSIONS ARE 1" LESS.
6. DESIGN PRESSURE LIMITATIONS:
   B SIZE BLOCKS OF THE ADJACENT TABLE WITH A BOLD ITALICIZED VALUE ABOVE THEM, INDICATE A MAXIMUM DESIGN PRESSURE WITH THE QUANTITY OF ANCHORS SHOWN IN BOLD. OTHERWISE, THE MAXIMUM DESIGN PRESSURE FOR THE RESPECTIVE SIZE AND GLASS TYPE IS AVAILABLE.

B TABLE 7. KEY:

	MAX. PSF
(DP LIMITED)	***112***
HEAD	**2**
JAMB ABOVE MTG. RAIL	**2**
(FULL DP)	
HEAD	2
JAMB ABOVE MTG. RAIL	4

B TABLE 8. KEY:

	MAX. PSF
(DP LIMITED)	***112***
JAMB BELOW MTG. RAIL	**2**
(FULL DP)	
JAMB BELOW MTG. RAIL	2

PRODUCT RENEWED
as complying with the Florida Building Code
Acceptance No 11-0128.03
Expiration Date MARCH 23, 2016
By Manuel Perez
Miami-Dade Product Control

PRODUCT REVISED
as complying with the Florida Building Code
Acceptance No 07-0322.06
Expiration Date MARCH 23, 2011
By Manuel Perez
Miami-Dade Product Control Division

Revsd By:	Date:	Revisions:	
Revsd By: F.K.	Date: 11/13/06	Revisions: B	REVISE ANCHORAGE TABLE AND NOTES. ADD DP MAX. WHERE ANCHOR QTY IS RESTRICTED BY SIZE.
Revsd By: F.K.	Date: 1/24/06	Revisions: A	NO CHANGE THIS SHEET
Drawn By: F.K.	Date: 7/29/05	Checked By: J.J.	Date: 2/23/07

1070 TECHNOLOGY DRIVE
NOKOMIS, FL 34275

P.O. BOX 1529
NOKOMIS, FL 34274

PGT Visibly Better

Description: ANCHORAGE SPACING, CUSTOM VIEW

Title: ALUM. SINGLE HUNG WINDOW, IMPACT

Series/Model:	Scale:	Sheet:	Drawing No.	Rev:
SH700	NTS	10 of 11	4040-20	B

3/14/07
Robert L. Clark, P.E.
PE #39712
Structural

EXTERIOR INTERIOR
(ALL HEAD AND SILL DETAILS)

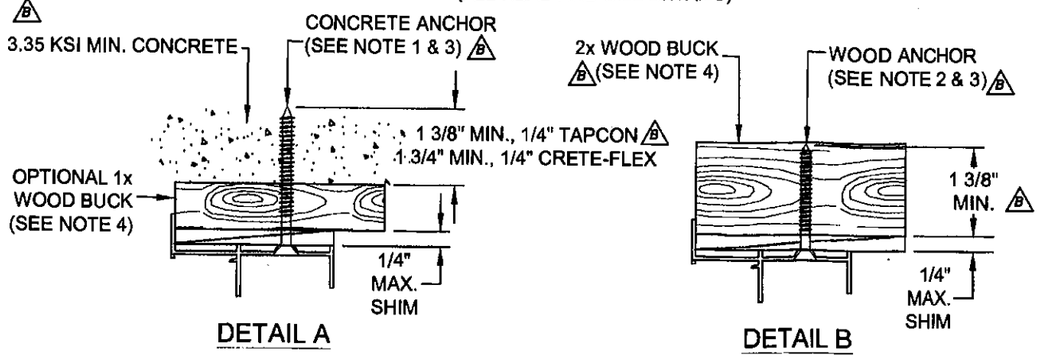

DETAIL A DETAIL B

TYPICAL FLANGED HEAD ANCHORAGE

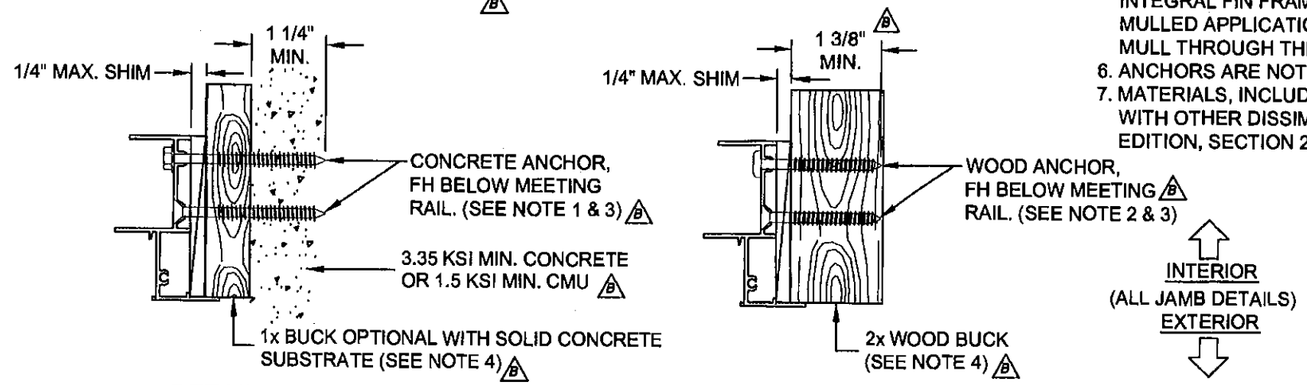

DETAIL C DETAIL D

TYPICAL FLANGED JAMB ANCHORAGE

INTERIOR
(ALL JAMB DETAILS)
EXTERIOR

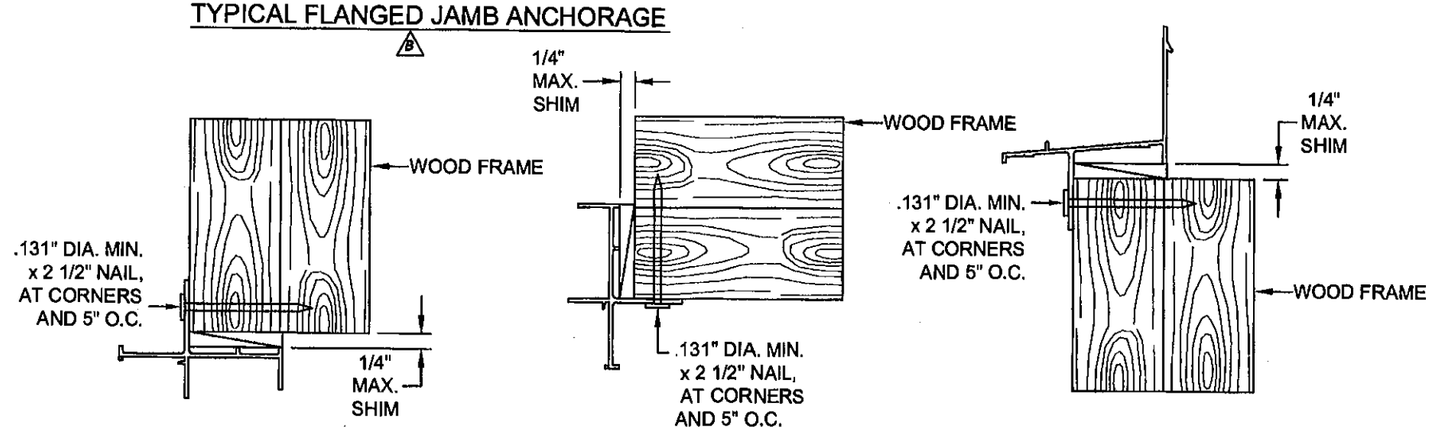

DETAIL F, (HEAD) DETAIL E, (JAMB) DETAIL G, (SILL)

TYPICAL INTEGRAL FIN ANCHORAGE

NOTES:

1. FOR CONCRETE APPLICATIONS IN MIAMI-DADE COUNTY, USE ONLY MIAMI-DADE COUNTY APPROVED 1/4" ELCO TAPCONS OR 1/4" SS4 CRETE-FLEX. MINIMUM DISTANCE FROM ANCHOR TO CONCRETE EDGE IS 1 3/4".
2. FOR WOOD APPLICATIONS IN MIAMI-DADE COUNTY, USE #12 STEEL SCREWS (G5) OR 1/4" SS4 CRETE-FLEX.
3. FLAT HEAD ANCHORS, WHERE REQUIRED, MUST HAVE #12 TRIMFIT HEADS.
4. WOOD BUCKS DEPICTED IN THE SECTIONS ON THIS PAGE AS 1x ARE BUCKS WHOSE TOTAL THICKNESS IS LESS THAN 1 1/2". 1x WOOD BUCKS ARE OPTIONAL IF UNIT CAN BE INSTALLED DIRECTLY TO SOLID CONCRETE. WOOD BUCKS DEPICTED AS 2x ARE 1 1/2" THICK OR GREATER. INSTALLATION TO THE SUBSTRATE OF WOOD BUCKS TO BE ENGINEERED BY OTHERS OR AS APPROVED BY AUTHORITY HAVING JURISDICTION.
5. FOR ATTACHMENT TO ALUMINUM: THE MATERIAL SHALL BE A MINIMUM STRENGTH OF 6063-T5 AND A MINIMUM OF 1/8" THICK. THE ALUMINUM STRUCTURAL MEMBER SHALL BE OF A SIZE TO PROVIDE FULL SUPPORT TO THE WINDOW FRAME SIMILAR TO THAT SHOWN IN THESE DETAILS FOR 2x WOOD BUCKS. THE ANCHOR SHALL BE A #12 SHEET METAL SCREW WITH FULL ENGAGEMENT INTO THE ALUMINUM. IF THESE CRITERIA ARE MET, THE RESPECTIVE DESIGN PRESSURES AND ANCHORAGE SPACING FOR TAPCONS MAY BE USED. A FLANGED FRAME COMPONENT MAY BE SUBSTITUTED FOR AN INTEGRAL FIN FRAME COMPONENT FOR MULLED APPLICATIONS. FOR INTEGRAL FIN MULLED APPLICATIONS IT IS EXCEPTABLE TO REMOVE THE FIN AND ATTACH TO THE MULL THROUGH THE FRAME USING THE FLANGED FRAME ANCHORAGE REQUIREMENT.
6. ANCHORS ARE NOT REQUIRED AT THE SILL OF FLANGED UNITS.
7. MATERIALS, INCLUDING BUT NOT LIMITED TO STEEL SCREWS, THAT COME INTO CONTACT WITH OTHER DISSIMILAR MATERIALS SHALL MEET THE REQUIREMENTS OF FBC CURRENT, EDITION, SECTION 2003.8.4 (SUPPLEMENT 2005).

PRODUCT RENEWED
as complying with the Florida Building Code
Acceptance No. 11-0128.03
Expiration Date MARCH 23, 2016
By Manuel Sosa
Miami Dade Product Control

PRODUCT REVISED
as complying with the Florida Building Code
Acceptance No. 07-0322.06
Expiration Date MARCH 23, 2011
By Manuel Sosa
Miami Dade Product Control Division

Revised By:	Date:	Revisions:	
F.K.	11/13/06	B	ADD INTEGRAL FIN ANCHORAGE, UPDATE & REORDER NOTES. ADD NOTES 7. UPDATE CONCRETE EMBEDMENT DIM.
F.K.	1/24/06	A	ADD NOTE 6 RE FLAT HEAD ANCHORS.
Drawn By: F.K.	Date: 9/1/05	Checked By: J.J.	Date: 2/23/07

1070 TECHNOLOGY DRIVE
NOKOMIS, FL 34275

P.O. BOX 1529
NOKOMIS, FL 34274

PGT Visibly Better

Description: ANCHORAGE DETAILS

Title: ALUM. SINGLE HUNG WINDOW, IMPACT

Series/Model:	Scale:	Sheet:	Drawing No.	Rev:
SH700	NTS	11 of 11	4040-20	B

3/16/07
Robert L. Clark, P.E.
PE #39712
Structural