MIAMI-DADE COUNTY
DEPARTMENT OF PERMITTING, ENVIRONMENT, AND REGULATORY AFFAIRS (PERA)
BOARD AND CODE ADMINISTRATION DIVISION

NOTICE OF ACCEPTANCE (NOA)

MIAMI-DADE COUNTY
PRODUCT CONTROL SECTION
11805 SW 26 Street, Room 208
Miami, Florida 33175-2474
T (786) 315-2590 F (786) 315-2599
www.miamidade.gov/pera/

WinDoor, Incorporated
7500 Amsterdam drive
Orlando, Florida, 32832

SCOPE:

This NOA is being issued under the applicable rules and regulations governing the use of construction materials. The documentation submitted has been reviewed and accepted by Miami-Dade County PERA -Product Control Section to be used in Miami Dade County and other areas where allowed by the Authority Having Jurisdiction (AHJ).

This NOA shall not be valid after the expiration date stated below. The Miami-Dade County Product Control Section (In Miami Dade County) and/or the AHJ (in areas other than Miami Dade County) reserve the right to have this product or material tested for quality assurance purposes. If this product or material fails to perform in the accepted manner, the manufacturer will incur the expense of such testing and the AHJ may immediately revoke, modify, or suspend the use of such product or material within their jurisdiction. PERA reserves the right to revoke this acceptance, if it is determined by Miami-Dade County Product Control Section that this product or material fails to meet the requirements of the applicable building code.

This product is approved as described herein, and has been designed to comply with the Florida Building Code, including the High Velocity Hurricane Zone.

DESCRIPTION: Series"8100"Aluminum Sliding Glass Door w/wo 90^0 &135^0 corner & w/wo Reinforcements

APPROVAL DOCUMENT: Drawing No. **08-01172,** titled "8100 Series Alum 90^0 & 135^0 Corner SGD", sheets 1 through 13 A, 13B, 14, 15, 16A & 16B through 30 of 30, prepared by manufacturer, dated 01/20/11 and last revised on 06/03/11, signed and sealed by Luis R. Lomas, P.E., bearing the Miami-Dade County Product Control approval stamp with the Notice of Acceptance number and approval date by the Miami-Dade County Product Control Section.

MISSILE IMPACT RATING: Large and Small Missile Impact Resistant

Limitation:

1. See Design Pressures (DP) rating Vs sizes, reinforcements, corner and sill riser in elevation, sheets **1** through **12**. See sheet **13A** for DP Vs sizes tables, sill riser, reinforcement and glass types for **90^0** corner and sheet **13B** for **135^0** corner units.
2. See anchors requirement in sheets **14, 16A & 16B**. One cluster (two anchors total) at each anchor location shown in sheets 14 & 16 at head, sill and jambs, except one (1) anchor at each pocket (hook-strips jamb) required. Door panels wider than 48" are limited to max. 120" high frame height. Door panel wider than 48" requires two clusters anchor (total four anchors) at centre of panel, see lay out in sheet **15.**
3. Door Panels with 90^0 & 135^0 not to exceed 60" wide X 120" high or 48" wide X 144" high on 2, 3 and 4 tracks with or without pockets.

LABELING: Each unit shall bear a permanent label with the manufacturer's name or logo, city, state and Series and following statement: "Miami-Dade County Product Control Approved", unless otherwise noted herein.

RENEWAL of this NOA shall be considered after a renewal application has been filed and there has been no change in the applicable building code negatively affecting the performance of this product.

TERMINATION of this NOA will occur after the expiration date or if there has been a revision or change in the materials, use, and/or manufacture of the product or process. Misuse of this NOA as an endorsement of any product, for sales, advertising or any other purposes shall automatically terminate this NOA. Failure to comply with any section of this NOA shall be cause for termination and removal of NOA.

MIAMI-DADE COUNTY APPROVED

10/26/11

ADVERTISEMENT: The NOA number preceded by the words Miami-Dade County, Florida, and followed by the expiration date may be displayed in advertising literature. If any portion of the NOA is displayed, then it shall be done in its entirety.

INSPECTION: A copy of this entire NOA shall be provided to the user by the manufacturer or its distributors and shall be available for inspection at the job site at the request of the Building Official.

This NOA consists of this page 1, page 2 and evidence pages E-1, as well as approval document mentioned above.

The submitted documentation was reviewed by **Ishaq I. Chanda, P.E.**

MIAMI-DADE COUNTY APPROVED

10/26/11

NOTICE OF ACCEPTANCE: EVIDENCE SUBMITTED

A. DRAWINGS

1. Manufacturer's die drawings and sections.
2. Drawing No. **08-01172,** titled "8100 Series Alum 90^0 & 135^0 Corner SGD", sheets 1 through 13 A, 13B, 14, 15, 16A & 16B through 30 of 30, prepared by manufacturer, dated 01/20/11 and last revised on 06/03/11, signed and sealed by Luis R. Lomas, P.E., bearing the Miami-Dade County Product Control approval stamp with the Notice of Acceptance number and approval date by the Miami-Dade County Product Control Section., P.E.

B. TESTS

1. Test reports on: 1) Air Infiltration Test, per FBC, TAS 202-94
   2) Uniform Static Air Pressure Test, Loading per FBC TAS 202-94
   3) Water Resistance Test, per FBC, TAS 202-94
   4) Large Missile Impact Test per FBC, TAS 201-94
   5) Cyclic Wind Pressure Loading per FBC, TAS 203-94
   6) Forced Entry Test, per FBC 2411 3.2.1, TAS 202-94

Along with marked-up drawings and installation diagram of Aluminum Sliding Glass, prepared by National Certified Testing Laboratories Inc, Test Report No. **NCTL-210-3643-1** and **NCTL-210-3643-2** both dated 01/14/11 and **revised** and **reissued** on 07/05/11, both signed & sealed by Gerald J, Ferrara, P.E.
(Note: This test reports have addendum letters dated 06/01/2011, issued by National Certified Testing Laboratories Inc., signed & sealed by Gerald J, Ferrara, P.E.)

C. CALCULATIONS

1. Anchor verification calculations, structural & comparative analysis, complying with FBC-2007, dated 02/05/2011 and last revised on 06/06/11, prepared, signed and sealed by Luis R. Lomas, P.E.,
2. Glazing complies w/ ASTME-1300-02 & -04

D. QUALITY ASSURANCE

1. Miami Dade Department of Permitting, Environment, and Regulatory Affairs (PERA).

E. MATERIAL CERTIFICATIONS

1. Notice of Acceptance No. **07-1116.04** issued to E.I. DuPont DeNemours & Co., Inc. for their "**DuPont Sentry Glass ® Plus**", expiring on 01/14/12.
2. Notice of Acceptance No. **08-1224.04** issued to Solutia, Inc. for their "**Saflex Composite Glass Interlayer w/ PET core**", expiring on 12/11/13.

F. STATEMENTS

1. Statement letters of conformance to FBC 2007 & FBC 2010 and "No financial interest", dated October 26, 2011, signed and sealed by Luis R. Lomas, P.E.
2. Test lab compliance statement, part of the above referenced reports.
3. Statement addendum letters dated 06/01/11, issued by National Certified Testing Laboratories Inc., signed & sealed by Gerald J, Ferrara, P.E.

G. OTHER

1. Test Proposals # **09-0421**, dated May 18, 2009 approved by BCCO.

Ishaq I. Chanda

Ishaq I. Chanda, P.E.
Product Control Examiner
NOA No 11-0208.01
Expiration Date: November 03, 2016
Approval Date: November 03, 2011

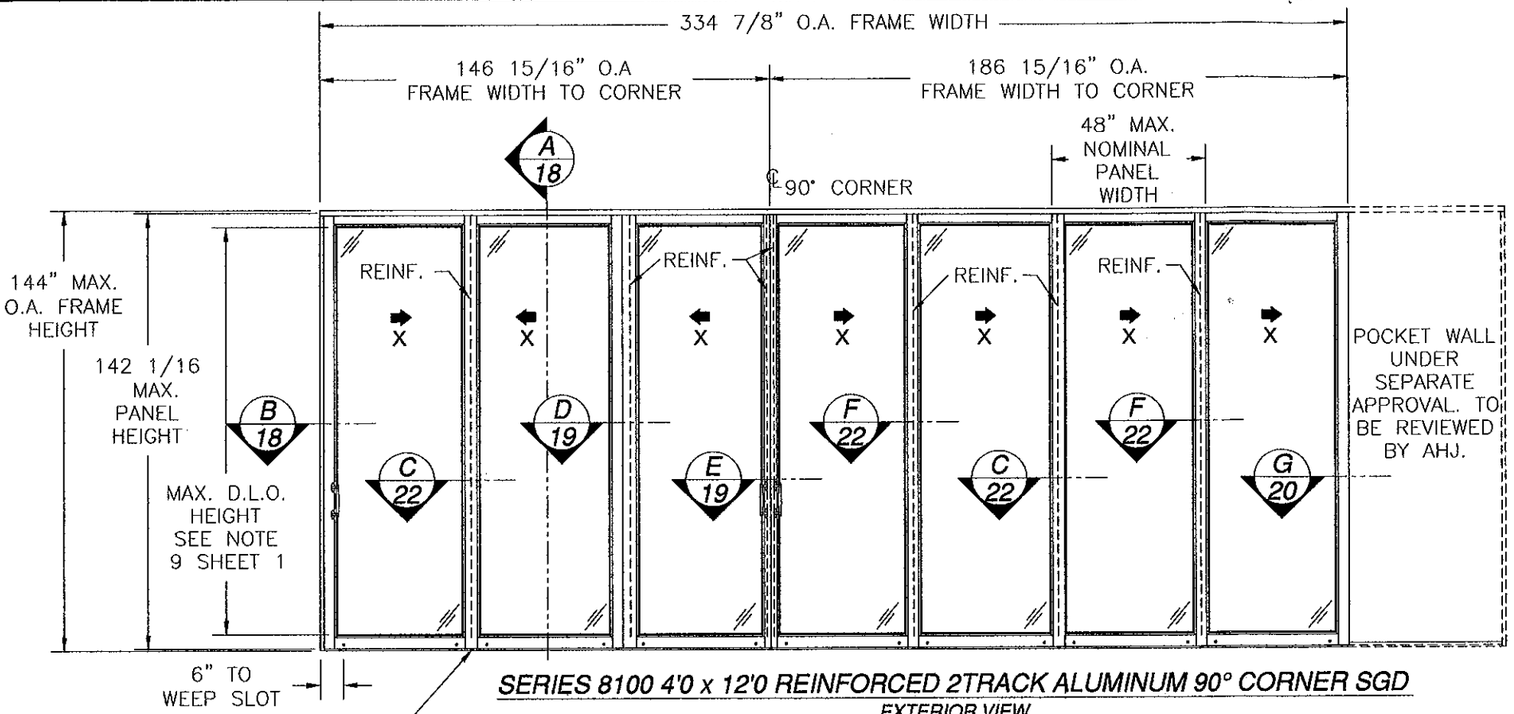

SERIES 8100 4'0 x 12'0 REINFORCED 2TRACK ALUMINUM 90° CORNER SGD

EXTERIOR VIEW

SEVEN PANELS ON 2TRACK FRAME SHOWN, UNLIMITED NUMBER OF PANELS IN UNLIMITED CONFIGURATIONS, BYPASS OR 90° CORNER, ON 2, 3 OR 4TRACK FRAME, WITH OR WITHOUT POCKETS, ARE APPROVED AS LONG AS INDIVIDUAL PANEL SIZE DOES NOT EXCEED MAXIMUM PANEL SIZE AND USES VERTICAL CONDITIONS AS SHOWN.

REVISIONS			
REV	DESCRIPTION	DATE	APPROVED
A	PER DADE LETTER DATED MARCH 21, 2011	03/24/11	R.L.

NOTES:

1) THE PRODUCT SHOWN HEREIN IS DESIGNED AND MANUFACTURED TO COMPLY WITH REQUIREMENTS OF THE FLORIDA BUILDING CODE INCLUDING THE HVHZ.
2) WOOD FRAMING/ 1X OR 2X BUCK, 20GA. 2X WOOD BACKED STEEL STUD OR MASONRY/CONCRETE OPENING TO BE DESIGNED AND ANCHORED TO PROPERLY TRANSFER ALL LOADS TO STRUCTURE. WOOD FRAMING/ 1X OR 2X BUCK, 20GA. 2X WOOD BACKED STEEL STUD OR MASONRY/CONCRETE OPENING IS THE RESPONSIBILITY OF THE ARCHITECT OR ENGINEER OF RECORD.
3) 1X BUCK OVER MASONRY/CONCRETE IS OPTIONAL. WHERE 1X BUCK IS NOT USED DISSIMILAR MATERIALS MUST BE SEPARATED WITH APPROVED COATING OR MEMBRANE. SELECTION OF COATING OR MEMBRANE IS THE RESPONSIBILITY OF THE ARCHITECT OR ENGINEER OF RECORD.
4) ALLOWABLE STRESS INCREASE OF 1/3 WAS NOT USED IN THE DESIGN OF THE PRODUCT SHOWN HEREIN. WIND LOAD DURATION FACTOR Cd=1.6 WAS USED FOR WOOD ANCHOR CALCULATIONS.
5) FRAME MATERIAL: EXTRUDED ALUMINUM 6063-T6
   PANEL MATERIAL: EXTRUDED ALUMINUM 6063-T6
6) UNITS MUST BE GLAZED PER ASTM E1300 WITH LARGE MISSILE IMPACT GLASS. SEE SHEET 17 FOR GLAZING OPTIONS.
7) APPROVED IMPACT PROTECTIVE SYSTEM IS NOT REQUIRED FOR THIS PRODUCT IN WIND BORNE DEBRIS REGIONS.
8) MAXIMUM 4'0 x 12'0 PANEL SIZE: 51 3/4" x 142 1/16"
   MAXIMUM 5'0 x 10'0 PANEL SIZE: 63 3/4" x 118 1/16"
9) MAXIMUM D.L.O. SIZE 4'0 x 12'0 PANEL: 40 1/4" x 132 5/8" (STD. BOTTOM RAIL) OR 129 3/32" (TALL BOTTOM RAIL).
10) MAXIMUM D.L.O. SIZE 5'0 x 10'0 PANEL: 52 1/4" x 109 3/16" (STD. BOTTOM RAIL) OR 105 3/32" (TALL BOTTOM RAIL).

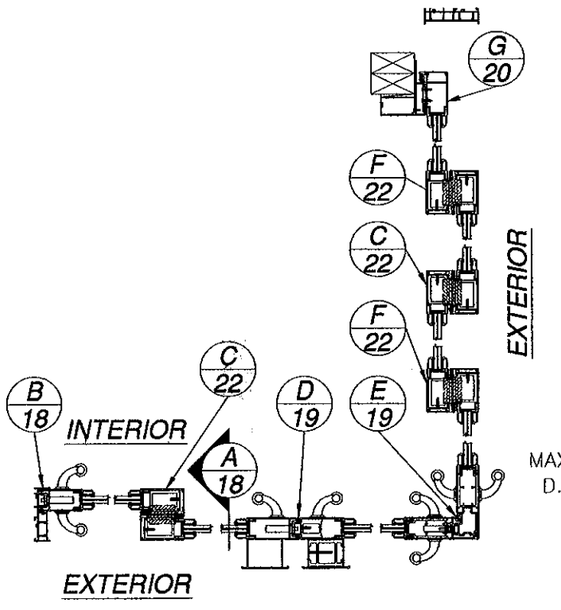

SERIES 8100 4'0 x 12'0 ALUMINUM 90° CORNER SGD

REINFORCED 2TRACK LAYOUT

REINFORCED UNIT WITH SILL RISER #34

DESIGN PRESSURE RATING	*IMPACT RATING*
±70PSF	*LARGE MISSILE IMPACT*

FOR ADDITIONAL SIZES SEE SHEET 13A

PANEL HEIGHT AND D.L.O. FORMULA
PANEL HEIGHT = UNIT HEIGHT - 1 9/16"
MAXIMUM D.L.O. HEIGHT = PANEL HEIGHT - 9 1/2"
D.L.O. WIDTH = NOMINAL PANEL WIDTH - 9 1/2"

TABLE OF CONTENTS

SHEET NO.	DESCRIPTION
1 - 12	ELEVATION, LAYOUT, NOTES AND DESIGN PRESSURES
13	DESIGN PRESSURE RATING CHARTS
14 - 15	ANCHORING LAYOUT AND NOTES
16	CLUSTER AND ANCHOR LOCATION DETAILS
17 - 18	BILL OF MATERIALS, GLAZING OPTIONS AND CROSS SECTIONS
19 - 22	CROSS SECTIONS
23 - 26	INSTALLATION DETAILS
27	LOCKING HARDWARE LAYOUT
28 - 30	COMPONENTS

Approved as complying with the Florida Building Code
Date NOVEMBER 03, 2011
NOA# 11-0203.01
Miami-Dade Product Control
By Ishaq I. Chanda

WinDoor INCORPORATED
7500 AMSTERDAM DRIVE
ORLANDO, FL 32832
Phone: 407.481.8400
Fax: 407.481.0505
www.windoorinc.com

8100 SERIES ALUMINUM 90° & 135° CORNER SGD
4'0 x 12'0 AND 5'0 x 10'0 PANELS - LMI
4'0 x 12'0 90° 2TRACK ELEVATION AND LAYOUT

DRAWN:	DWG NO.	REV
TJH	08-01172	A
SCALE NTS	DATE 01/20/11	SHEET 1 OF 30

06/03/11
Luis R. Lomas P.E.
Florida No. 62514

REVISIONS			
REV	DESCRIPTION	DATE	APPROVED
A	PER DADE LETTER DATED MAY 06, 2010	05/12/10	R.L.

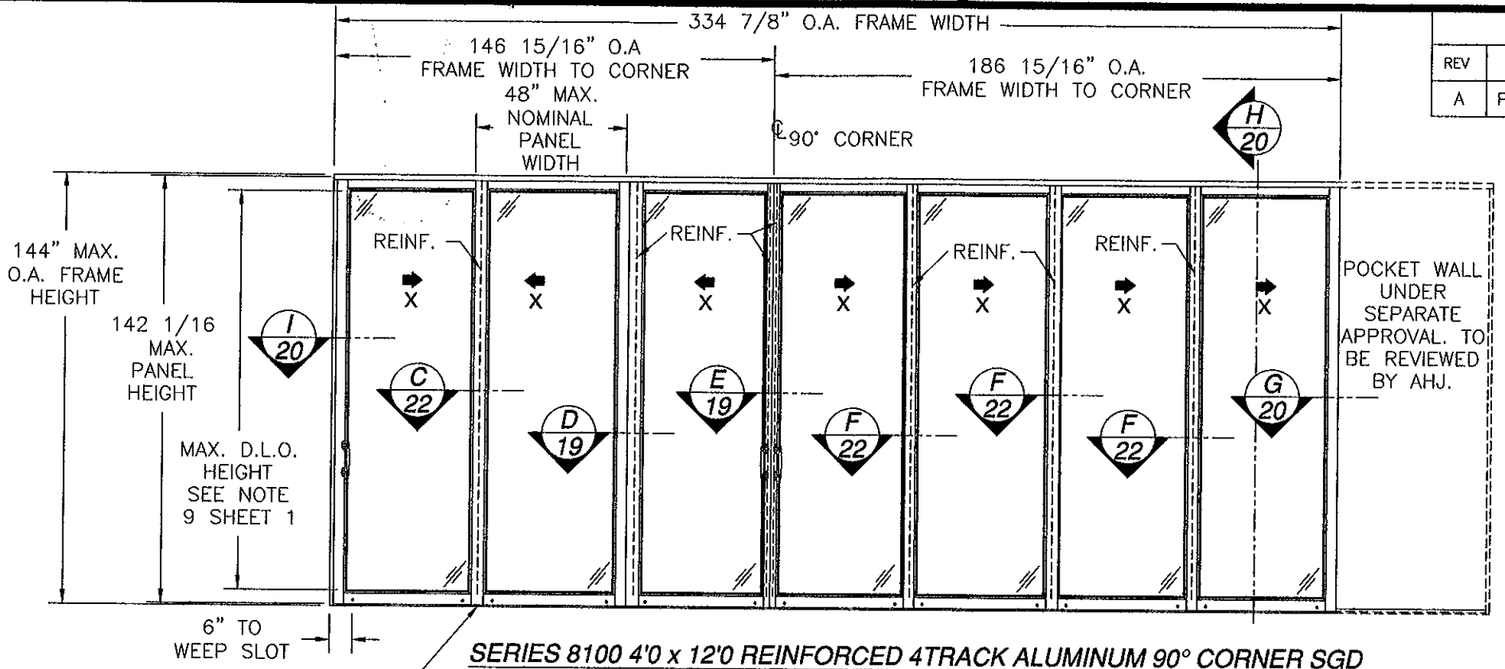

SERIES 8100 4'0 x 12'0 REINFORCED 4TRACK ALUMINUM 90° CORNER SGD

EXTERIOR VIEW

SEVEN PANELS ON 4TRACK FRAME SHOWN, UNLIMITED NUMBER OF PANELS IN UNLIMITED CONFIGURATIONS, BYPASS OR 90° CORNER, ON 2, 3 OR 4TRACK FRAME, WITH OR WITHOUT POCKETS, ARE APPROVED AS LONG AS INDIVIDUAL PANEL SIZE DOES NOT EXCEED MAXIMUM PANEL SIZE AND USES VERTICAL CONDITIONS AS SHOWN.

REINFORCED UNIT W/ SILL RISER #34

DESIGN PRESSURE RATING	*IMPACT RATING*
±70PSF	*LARGE MISSILE IMPACT*

FOR ADDITIONAL SIZES SEE SHEET 13A

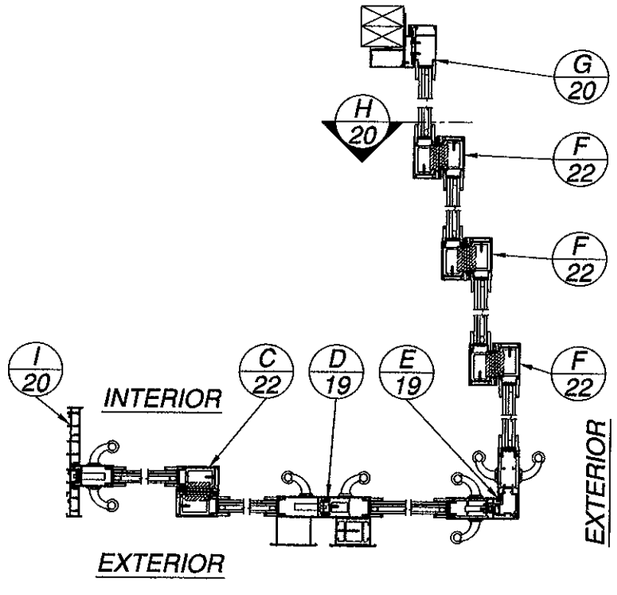

SERIES 8100 4'0 x 12'0 ALUMINUM 90° CORNER SGD

REINFORCED 4TRACK LAYOUT

PANEL HEIGHT AND D.L.O. FORMULA
PANEL HEIGHT = UNIT HEIGHT – 1 9/16"
MAXIMUM D.L.O. HEIGHT = PANEL HEIGHT – 9 1/2"
D.L.O. WIDTH = NOMINAL PANEL WIDTH – 9 1/2"

Approved as complying with the Florida Building Code
Date NOV 03, 2011
NOA# 11-0209.01
Miami-Dade Product Control
By Ishaq I. Chanda

WinDoor INCORPORATED
7500 AMSTERDAM DRIVE
ORLANDO, FL 32832
Phone: 407.481.8400
Fax: 407.481.0505
www.windoorinc.com

8100 SERIES ALUMINUM 90° & 135° CORNER SGD
4'0 x 12'0 AND 5'0 x 10'0 PANELS – LMI
4'0 x 12'0 90° 4TRACK ELEVATION AND LAYOUT

DRAWN:	DWG NO.	REV
TJH	08-01172	A
SCALE NTS	DATE 01/20/11	SHEET 2 OF 30

06/03/11
Luis R. Lomas P.E.
Florida No. 62514

REVISIONS			
REV	DESCRIPTION	DATE	APPROVED
A	PER DADE LETTER DATED MAY 06, 2010	05/12/10	R.L.

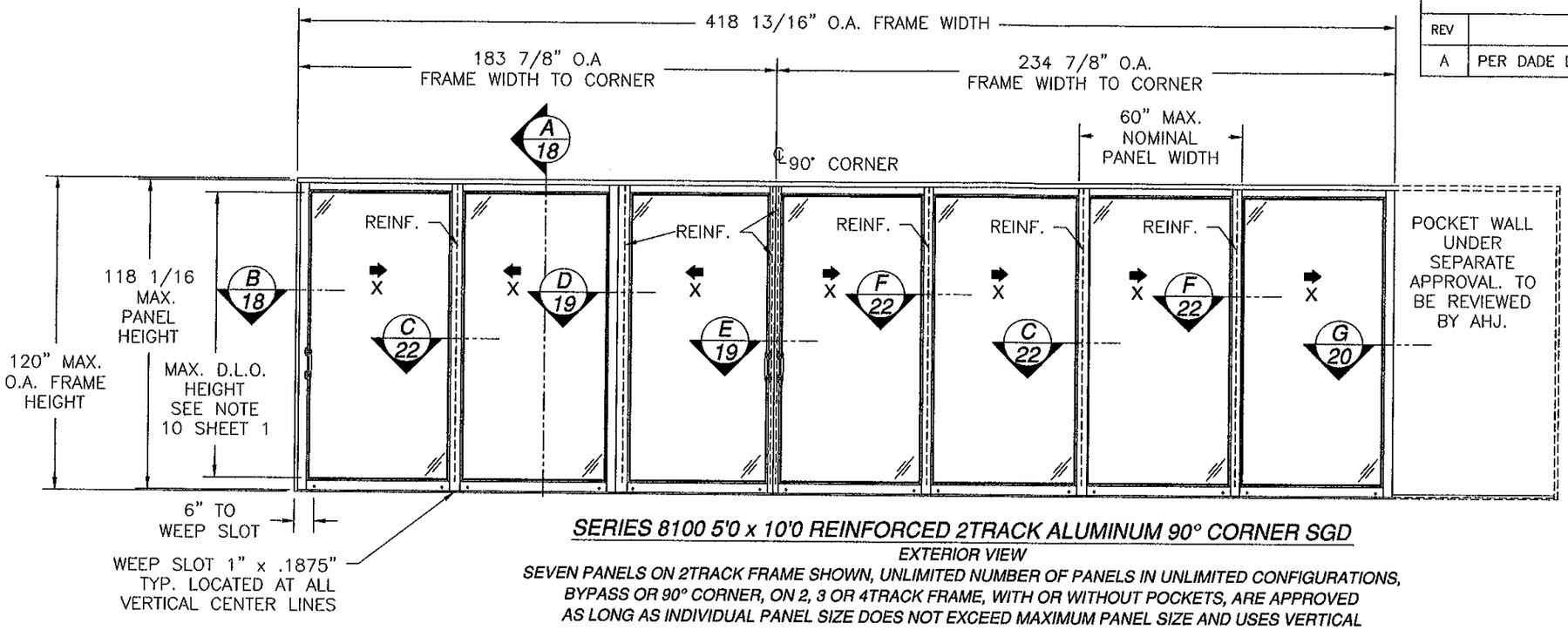

SERIES 8100 5'0 x 10'0 REINFORCED 2TRACK ALUMINUM 90° CORNER SGD

EXTERIOR VIEW

SEVEN PANELS ON 2TRACK FRAME SHOWN, UNLIMITED NUMBER OF PANELS IN UNLIMITED CONFIGURATIONS, BYPASS OR 90° CORNER, ON 2, 3 OR 4TRACK FRAME, WITH OR WITHOUT POCKETS, ARE APPROVED AS LONG AS INDIVIDUAL PANEL SIZE DOES NOT EXCEED MAXIMUM PANEL SIZE AND USES VERTICAL CONDITIONS AS SHOWN.

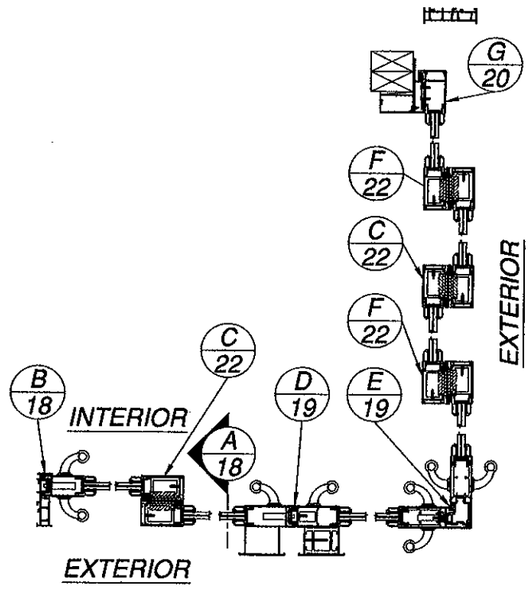

SERIES 8100 5'0 x 10'0 ALUMINUM 90° CORNER SGD

REINFORCED 2TRACK LAYOUT

REINFORCED UNIT W/ SILL RISER #34

DESIGN PRESSURE RATING	*IMPACT RATING*
±80PSF	*LARGE MISSILE IMPACT*

FOR ADDITIONAL SIZES SEE SHEET 13A

PANEL HEIGHT AND D.L.O. FORMULA
PANEL HEIGHT = UNIT HEIGHT – 1 9/16"
MAXIMUM D.L.O. HEIGHT = PANEL HEIGHT – 9 1/2"
D.L.O. WIDTH = NOMINAL PANEL WIDTH – 9 1/2"

Approved as complying with the Florida Building Code
Date NOV 03, 2011
NOA# 11-0209.01
Miami Dade Product Control
By Chang I. Chan II

WinDoor INCORPORATED
7500 AMSTERDAM DRIVE
ORLANDO, FL 32832
Phone: 407.481.8400
Fax: 407.481.0505
www.windoorinc.com

8100 SERIES ALUMINUM 90° & 135° CORNER SGD
4'0 x 12'0 AND 5'0 x 10'0 PANELS – LMI
5'0 x 10'0 90° 2TRACK ELEVATION AND LAYOUT

DRAWN:	DWG NO.	REV
TJH	08-01172	A
SCALE NTS	DATE 01/20/11	SHEET 3 OF 30

06/03/11
Luis R. Lomas P.E.
Florida No. 62514

REVISIONS			
REV	DESCRIPTION	DATE	APPROVED
A	PER DADE LETTER DATED MAY 06, 2010	05/12/10	R.L.

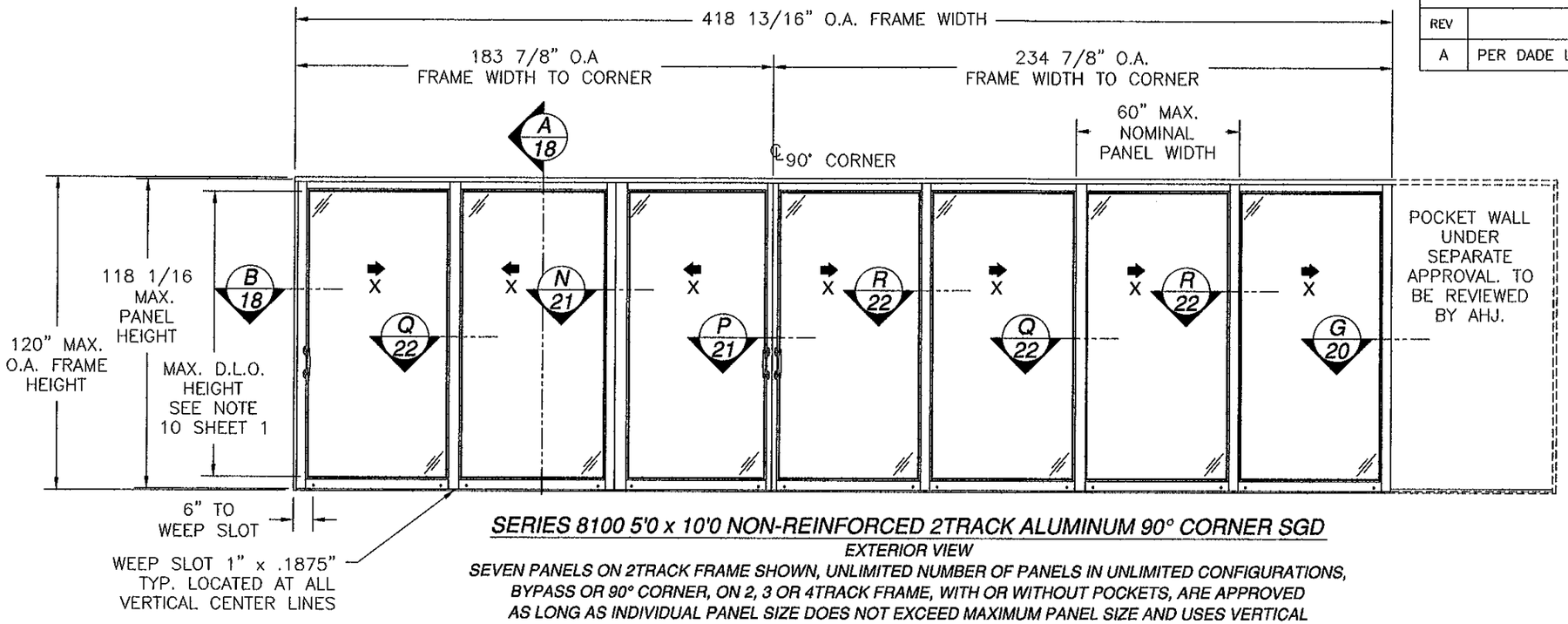

SERIES 8100 5'0 x 10'0 NON-REINFORCED 2TRACK ALUMINUM 90° CORNER SGD

EXTERIOR VIEW

SEVEN PANELS ON 2TRACK FRAME SHOWN, UNLIMITED NUMBER OF PANELS IN UNLIMITED CONFIGURATIONS, BYPASS OR 90° CORNER, ON 2, 3 OR 4TRACK FRAME, WITH OR WITHOUT POCKETS, ARE APPROVED AS LONG AS INDIVIDUAL PANEL SIZE DOES NOT EXCEED MAXIMUM PANEL SIZE AND USES VERTICAL CONDITIONS AS SHOWN.

NON-REINFORCED UNIT W/ SILL RISER #33

DESIGN PRESSURE RATING	IMPACT RATING
±50PSF	LARGE MISSILE IMPACT

FOR ADDITIONAL SIZES SEE SHEET 13B

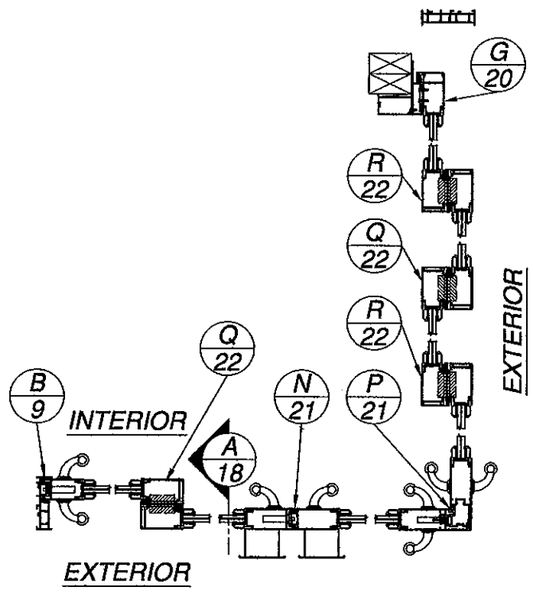

SERIES 8100 5'0 x 10'0 ALUMINUM 90° CORNER SGD

NON-REINFORCED 2TRACK LAYOUT

PANEL HEIGHT AND D.L.O. FORMULA
PANEL HEIGHT = UNIT HEIGHT – 1 9/16"
MAXIMUM D.L.O. HEIGHT = PANEL HEIGHT – 9 1/2"
D.L.O. WIDTH = NOMINAL PANEL WIDTH – 9 1/2"

Approved as complying with the Florida Building Code
Date NOV 03 2011
NOA# 11-0209.02
Miami Dade Product Control
By Ishaq I. Chanda

WinDoor INCORPORATED
7500 AMSTERDAM DRIVE
ORLANDO, FL 32832
Phone: 407.481.8400
Fax: 407.481.0505
www.windoorinc.com

8100 SERIES ALUMINUM 90° & 135° CORNER SGD
4'0 x 12'0 AND 5'0 x 10'0 PANELS – LMI
5'0 x 10'0 90° 2TRACK ELEVATION AND LAYOUT

DRAWN:	DWG NO.	REV
TJH	08-01172	A
SCALE NTS	DATE 01/20/11	SHEET 4 OF 30

06/03/11
Luis R. Lomas P.E.
Florida No. 62514

REVISIONS			
REV	DESCRIPTION	DATE	APPROVED
A	PER DADE LETTER DATED MAY 06, 2010	05/12/10	R.L.

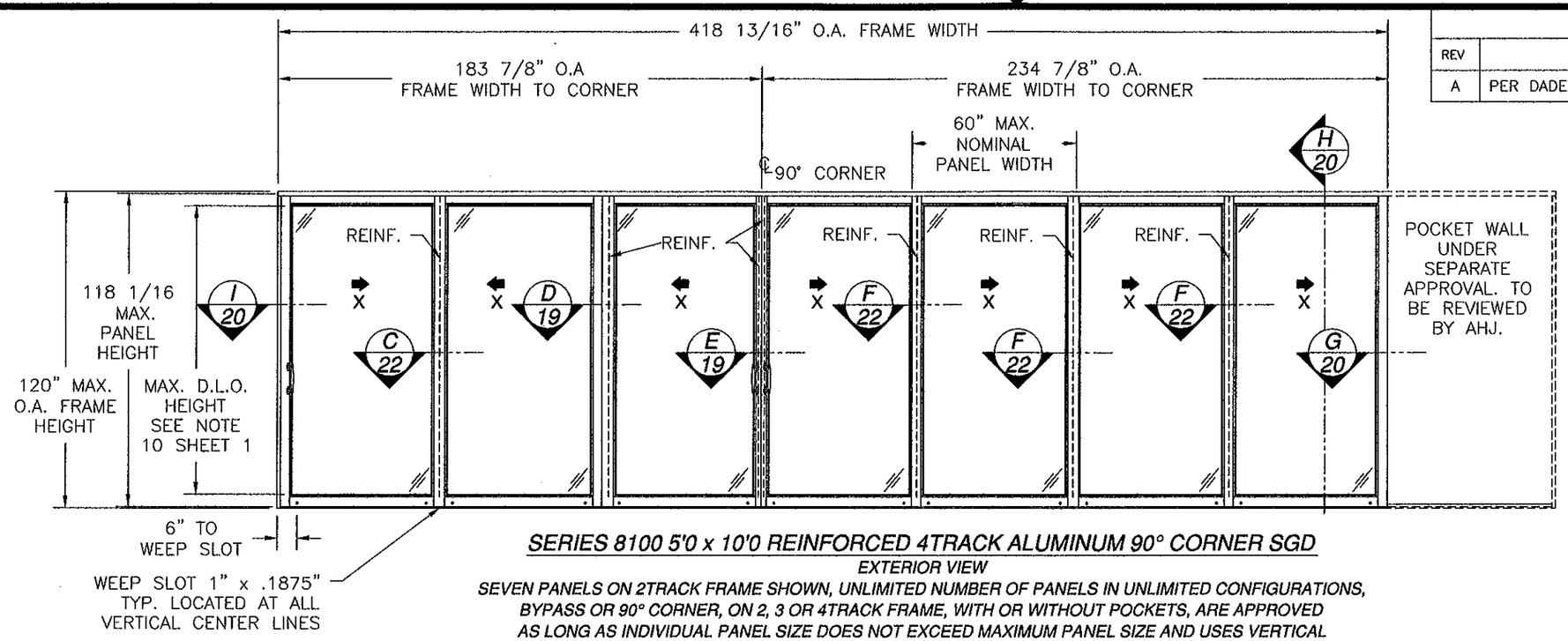

SERIES 8100 5'0 x 10'0 REINFORCED 4TRACK ALUMINUM 90° CORNER SGD

EXTERIOR VIEW

SEVEN PANELS ON 2TRACK FRAME SHOWN, UNLIMITED NUMBER OF PANELS IN UNLIMITED CONFIGURATIONS, BYPASS OR 90° CORNER, ON 2, 3 OR 4TRACK FRAME, WITH OR WITHOUT POCKETS, ARE APPROVED AS LONG AS INDIVIDUAL PANEL SIZE DOES NOT EXCEED MAXIMUM PANEL SIZE AND USES VERTICAL CONDITIONS AS SHOWN.

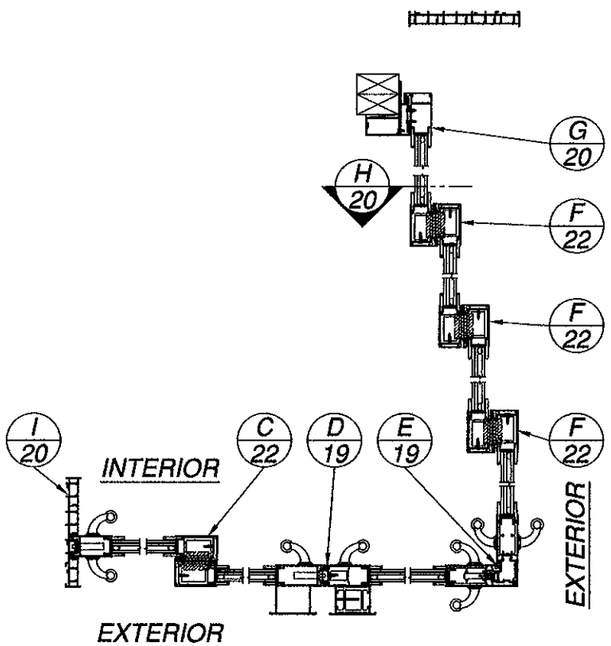

SERIES 8100 5'0 x 10'0 ALUMINUM 90° CORNER SGD

REINFORCED 4TRACK LAYOUT

REINFORCED UNIT W/ SILL RISER #34

DESIGN PRESSURE RATING	*IMPACT RATING*
±80PSF	*LARGE MISSILE IMPACT*

FOR ADDITIONAL SIZES SEE SHEET 13A

PANEL HEIGHT AND D.L.O. FORMULA
PANEL HEIGHT = UNIT HEIGHT – 1 9/16"
MAXIMUM D.L.O. HEIGHT = PANEL HEIGHT – 9 1/2"
D.L.O. WIDTH = NOMINAL PANEL WIDTH – 9 1/2"

Approved as complying with the Florida Building Code
Date: Nov 03, 2011
NOA# 11-0209.01
Miami Dade Product Control
By: Ishaq I. Chanda

WinDoor INCORPORATED
7500 AMSTERDAM DRIVE
ORLANDO, FL 32832
Phone: 407.481.8400
Fax: 407.481.0505
www.windoorinc.com

8100 SERIES ALUMINUM 90° & 135° CORNER SGD
4'0 x 12'0 AND 5'0 x 10'0 PANELS – LMI
5'0 x 10'0 90° 4TRACK ELEVATION AND LAYOUT

DRAWN:	DWG NO.	REV
TJH	08-01172	A
SCALE NTS	DATE 01/20/11	SHEET 5 OF 30

06/03/11
Luis R. Lomas P.E.
Florida No. 62514

REVISIONS			
REV	DESCRIPTION	DATE	APPROVED
A	PER DADE LETTER DATED MAY 06, 2010	05/12/10	R.L.

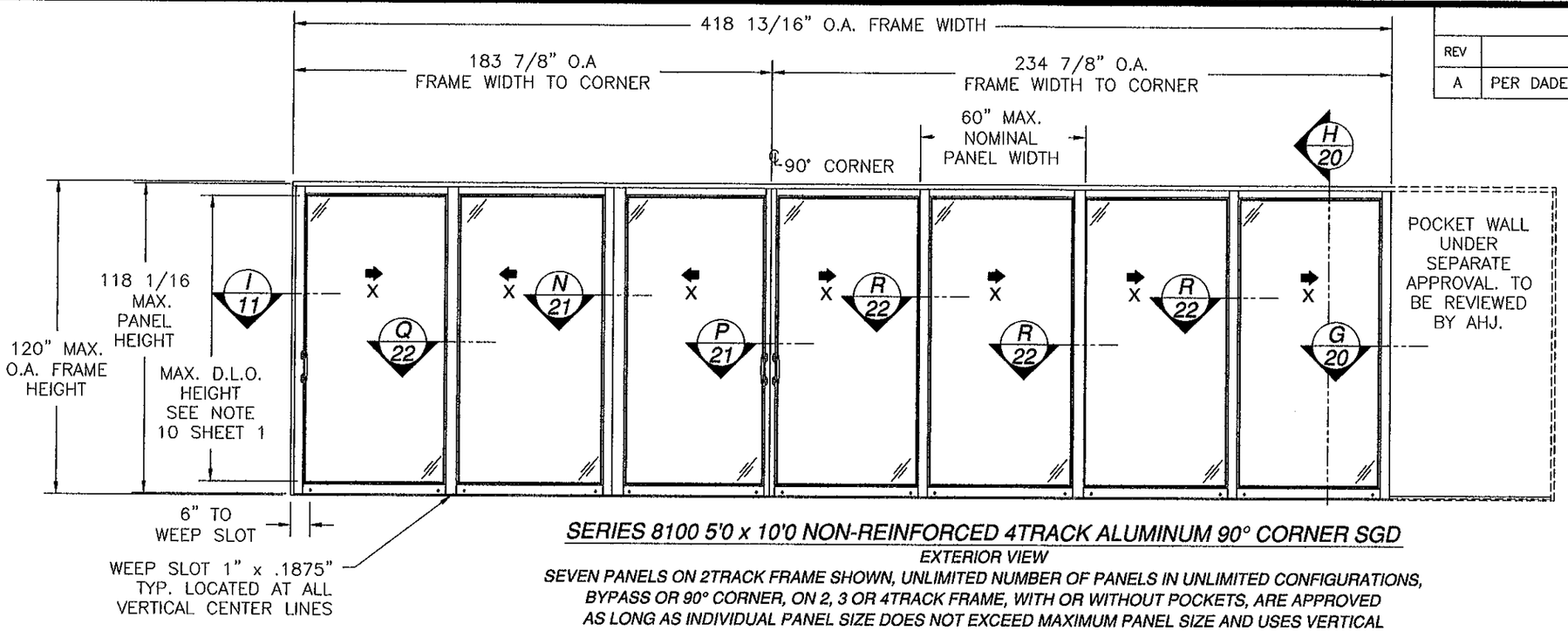

SERIES 8100 5'0 x 10'0 NON-REINFORCED 4TRACK ALUMINUM 90° CORNER SGD

EXTERIOR VIEW

SEVEN PANELS ON 2TRACK FRAME SHOWN, UNLIMITED NUMBER OF PANELS IN UNLIMITED CONFIGURATIONS, BYPASS OR 90° CORNER, ON 2, 3 OR 4TRACK FRAME, WITH OR WITHOUT POCKETS, ARE APPROVED AS LONG AS INDIVIDUAL PANEL SIZE DOES NOT EXCEED MAXIMUM PANEL SIZE AND USES VERTICAL CONDITIONS AS SHOWN.

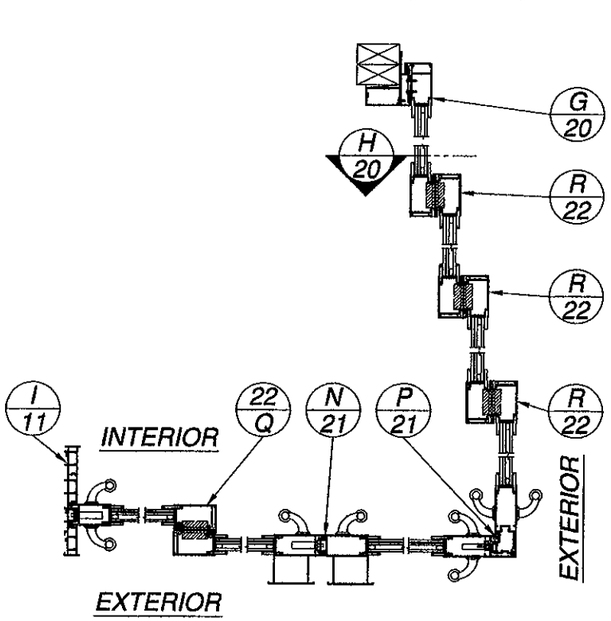

SERIES 8100 5'0 x 10'0 ALUMINUM 90° CORNER SGD

NON-REINFORCED 4TRACK LAYOUT

REINFORCED UNIT W/ SILL RISER #34

DESIGN PRESSURE RATING	*IMPACT RATING*
±50PSF	*LARGE MISSILE IMPACT*

FOR ADDITIONAL SIZES SEE SHEET 13A

PANEL HEIGHT AND D.L.O. FORMULA

PANEL HEIGHT = UNIT HEIGHT – 1 9/16"

MAXIMUM D.L.O. HEIGHT = PANEL HEIGHT – 9 1/2"

D.L.O. WIDTH = NOMINAL PANEL WIDTH – 9 1/2"

Approved as complying with the Florida Building Code
Date Aug 31, 2011
NOA# 11-0705.04
Miami-Dade Product Control
By Ishaq I. Chanda

WinDoor INCORPORATED
7500 AMSTERDAM DRIVE
ORLANDO, FL 32832
Phone: 407.481.8400
Fax: 407.481.0505
www.windoorinc.com

8100 SERIES ALUMINUM 90° & 135° CORNER SGD
4'0 x 12'0 AND 5'0 x 10'0 PANELS – LMI
5'0 x 10'0 90° 4TRACK ELEVATION AND LAYOUT

DRAWN:	DWG NO.	REV
TJH	08-01172	A
SCALE NTS	DATE 01/20/11	SHEET 6 OF 30

06/03/11
Luis R. Lomas P.E.
Florida No. 62514

REVISIONS			
REV	DESCRIPTION	DATE	APPROVED
A	PER DADE LETTER DATED MAY 06, 2010	05/12/10	R.L.

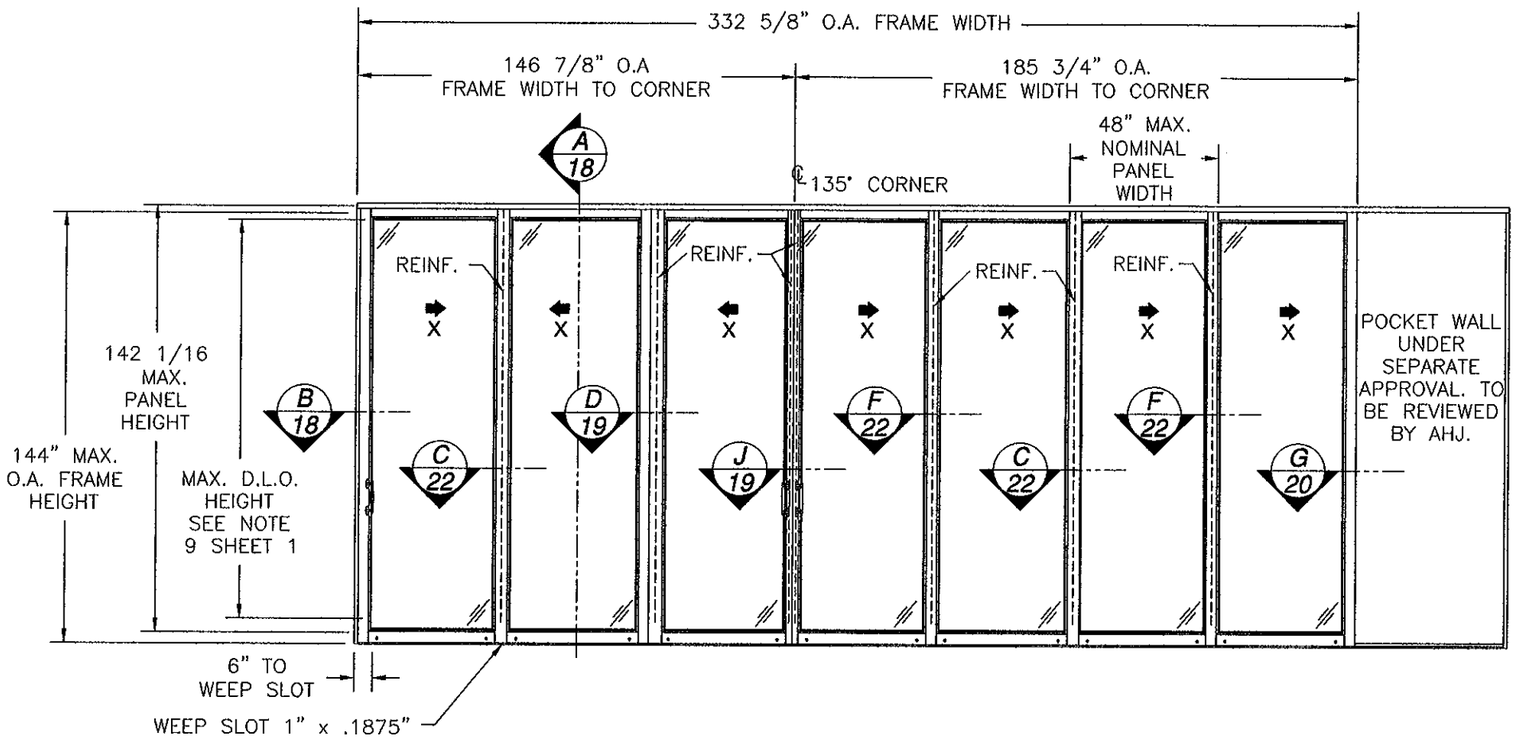

SERIES 8100 4'0 x 12'0 REINFORCED 2TRACK ALUMINUM 135° CORNER SGD

EXTERIOR VIEW

SEVEN PANELS ON 2TRACK FRAME SHOWN, UNLIMITED NUMBER OF PANELS IN UNLIMITED CONFIGURATIONS, BYPASS OR 135° CORNER, ON 2, 3 OR 4TRACK FRAME, WITH OR WITHOUT POCKETS, ARE APPROVED AS LONG AS INDIVIDUAL PANEL SIZE DOES NOT EXCEED MAXIMUM PANEL SIZE AND USES VERTICAL CONDITIONS AS SHOWN.

REINFORCED UNIT W/ SILL RISER #34

DESIGN PRESSURE RATING	*IMPACT RATING*
±70PSF	*LARGE MISSILE IMPACT*

FOR ADDITIONAL SIZES SEE SHEET 13B

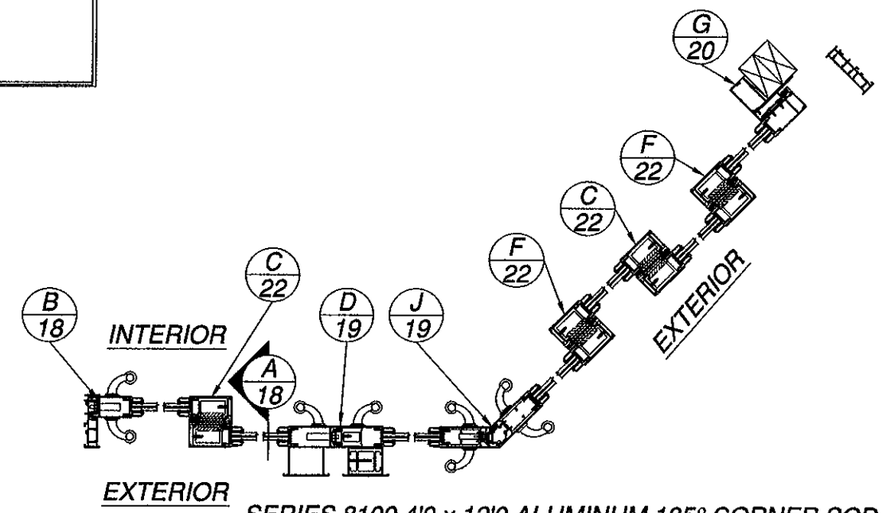

SERIES 8100 4'0 x 12'0 ALUMINUM 135° CORNER SGD

REINFORCED 2TRACK LAYOUT

PANEL HEIGHT AND D.L.O. FORMULA
PANEL HEIGHT = UNIT HEIGHT – 1 9/16"
MAXIMUM D.L.O. HEIGHT = PANEL HEIGHT – 9 1/2"
D.L.O. WIDTH = NOMINAL PANEL WIDTH – 9 1/2"

Approved as complying with the Florida Building Code
Date Nov 03, 2011
NOA# 11-0209.01
Miami Dade Product Control
By Iqbal I. Chanda

WinDoor INCORPORATED
7500 AMSTERDAM DRIVE
ORLANDO, FL 32832
Phone: 407.481.8400
Fax: 407.481.0505
www.windoorinc.com

8100 SERIES ALUMINUM 90° & 135° CORNER SGD
4'0 x 12'0 AND 5'0 x 10'0 PANELS – LMI
4'0 x 12'0 135° 2TRACK ELEVATION AND LAYOUT

DRAWN:	DWG NO.	REV
TJH	08-01172	A
SCALE NTS	DATE 01/20/11	SHEET 7 OF 30

06/03/11
Luis R. Lomas P.E.
Florida No. 62514

REVISIONS			
REV	DESCRIPTION	DATE	APPROVED
A	PER DADE LETTER DATED MAY 06, 2010	05/12/10	R.L.

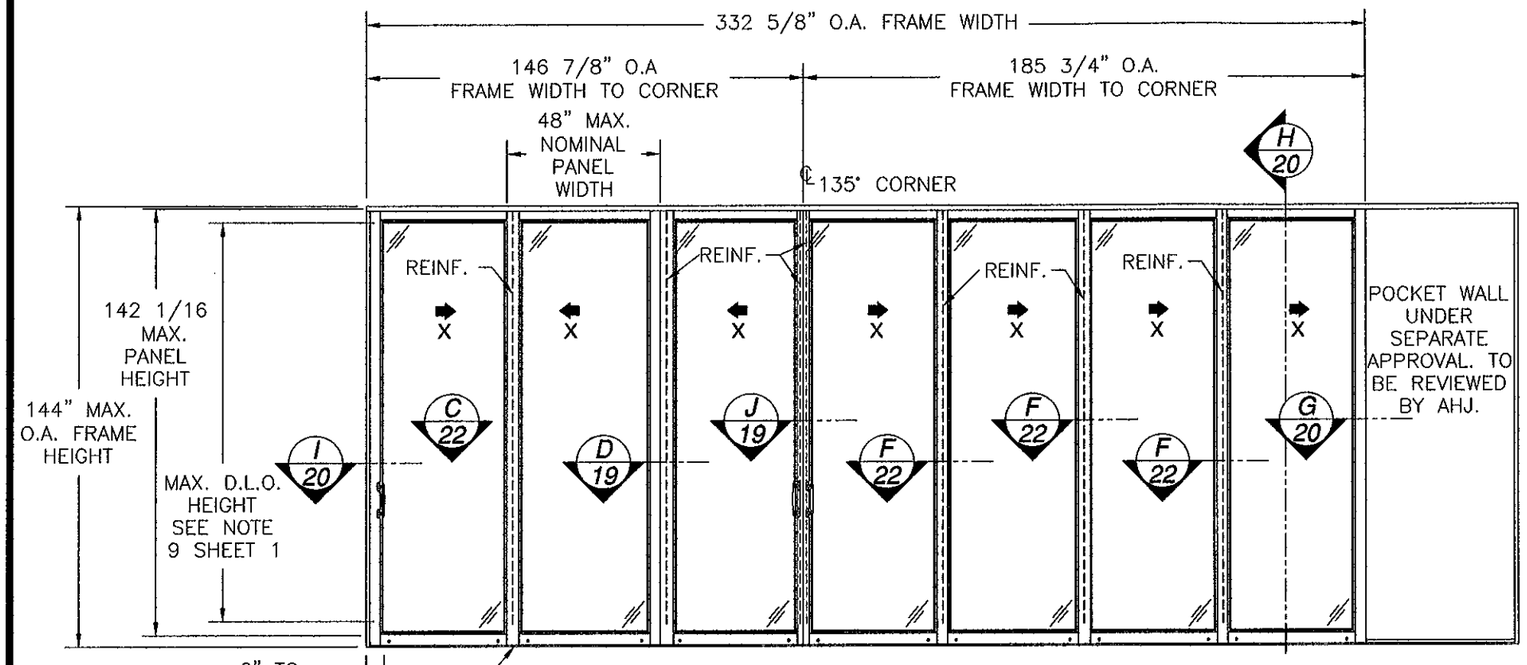

SERIES 8100 4'0 x12'0 REINFORCED 4TRACK ALUMINUM 135° CORNER SGD

EXTERIOR VIEW

SEVEN PANELS ON 4TRACK FRAME SHOWN, UNLIMITED NUMBER OF PANELS IN UNLIMITED CONFIGURATIONS, BYPASS OR 135° CORNER, ON 2, 3 OR 4TRACK FRAME, WITH OR WITHOUT POCKETS, ARE APPROVED AS LONG AS INDIVIDUAL PANEL SIZE DOES NOT EXCEED MAXIMUM PANEL SIZE AND USES VERTICAL CONDITIONS AS SHOWN.

REINFORCED UNIT W/ SILL RISER #34

DESIGN PRESSURE RATING	*IMPACT RATING*
±70PSF	*LARGE MISSILE IMPACT*

FOR ADDITIONAL SIZES SEE SHEET 13B

PANEL HEIGHT AND D.L.O. FORMULA
PANEL HEIGHT = UNIT HEIGHT – 1 9/16"
MAXIMUM D.L.O. HEIGHT = PANEL HEIGHT – 9 1/2"
D.L.O. WIDTH = NOMINAL PANEL WIDTH – 9 1/2"

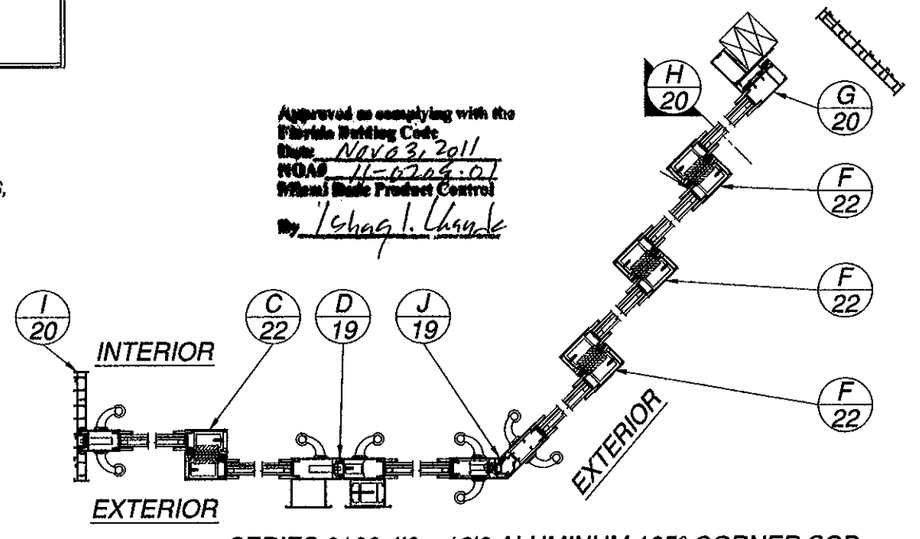

Approved as complying with the Florida Building Code
Date: Nov 03, 2011
NOA# 11-0209.01
Miami-Dade Product Control
By: Ishaq I. Chanda

SERIES 8100 4'0 x 12'0 ALUMINUM 135° CORNER SGD

REINFORCED 4TRACK LAYOUT

WinDoor INCORPORATED
7500 AMSTERDAM DRIVE
ORLANDO, FL 32832
Phone: 407.481.8400
Fax: 407.481.0505
www.windoorinc.com

8100 SERIES ALUMINUM 90° & 135° CORNER SGD
4'0 x 12'0 AND 5'0 x 10'0 PANELS – LMI
4'0 x 12'0 135° 4TRACK ELEVATION AND LAYOUT

DRAWN:	DWG NO.	REV
TJH	08-01172	A
SCALE NTS	DATE 01/20/11	SHEET 8 OF 30

Luis R. Lomas
06/03/11
Luis R. Lomas, P.E.
Florida No. 62514

REVISIONS			
REV	DESCRIPTION	DATE	APPROVED
A	PER DADE LETTER DATED MAY 06, 2010	05/12/10	R.L.

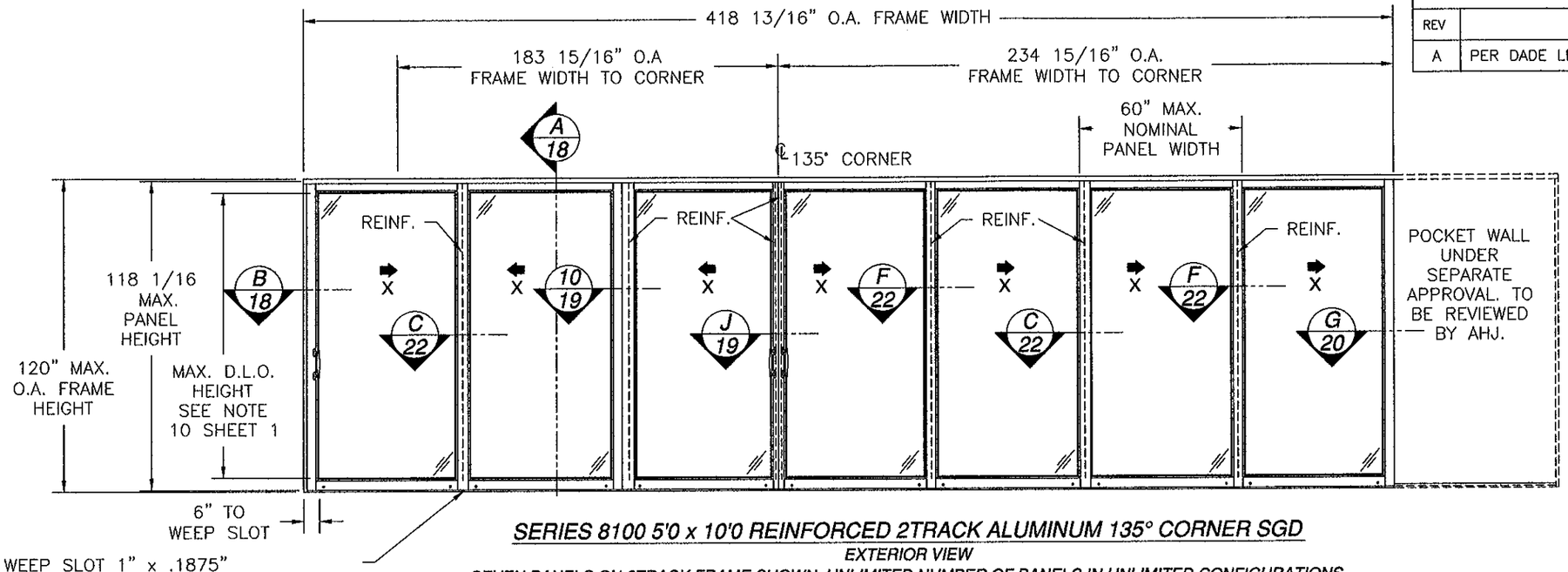

SERIES 8100 5'0 x 10'0 REINFORCED 2TRACK ALUMINUM 135° CORNER SGD

EXTERIOR VIEW

SEVEN PANELS ON 2TRACK FRAME SHOWN, UNLIMITED NUMBER OF PANELS IN UNLIMITED CONFIGURATIONS, BYPASS OR 135° CORNER, ON 2, 3 OR 4TRACK FRAME, WITH OR WITHOUT POCKETS, ARE APPROVED AS LONG AS INDIVIDUAL PANEL SIZE DOES NOT EXCEED MAXIMUM PANEL SIZE AND USES VERTICAL CONDITIONS AS SHOWN.

REINFORCED UNIT W/ SILL RISER #34

DESIGN PRESSURE RATING	IMPACT RATING
±70PSF	LARGE MISSILE IMPACT

FOR ADDITIONAL SIZES SEE SHEET 13B

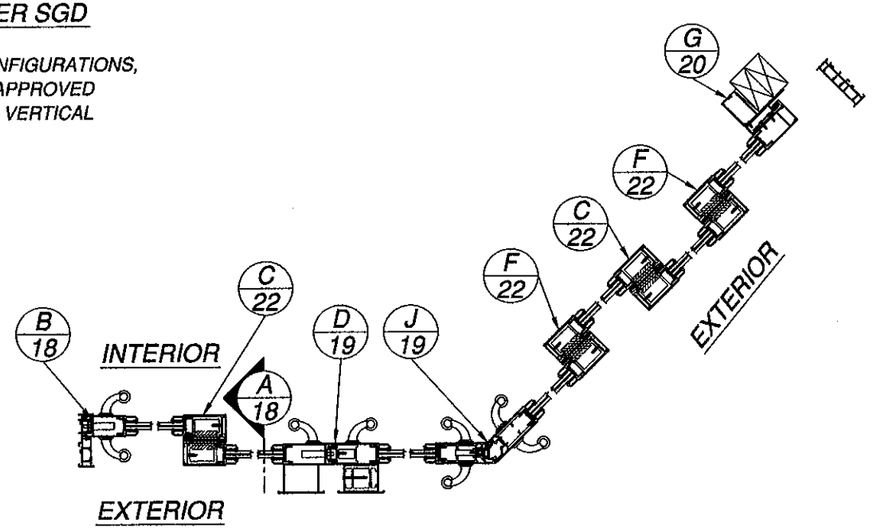

SERIES 8100 5'0 x 10'0 ALUMINUM 135° CORNER SGD

REINFORCED 2TRACK LAYOUT

PANEL HEIGHT AND D.L.O. FORMULA

PANEL HEIGHT = UNIT HEIGHT − 1 9/16"

MAXIMUM D.L.O. HEIGHT = PANEL HEIGHT − 9 1/2"

D.L.O. WIDTH = NOMINAL PANEL WIDTH − 9 1/2"

Approved as complying with the Florida Building Code
Date Nov 03, 2011
NOA# 11-0209.01
Miami Dade Product Control
By Ishay I. Chauk

WinDoor INCORPORATED
7500 AMSTERDAM DRIVE
ORLANDO, FL 32832
Phone: 407.481.8400
Fax: 407.481.0505
www.windoorinc.com

8100 SERIES ALUMINUM 90° & 135° CORNER SGD
4'0 x 12'0 AND 5'0 x 10'0 PANELS − LMI
5'0 x 10'0 135° 2TRACK ELEVATION AND LAYOUT

DRAWN:	DWG NO.	REV
TJH	08-01172	A

SCALE	DATE	SHEET
NTS	01/20/11	9 OF 30

Luis R. Lomas
06/03/11

Luis R. Lomas P.E.
Florida No. 62514

REVISIONS			
REV	DESCRIPTION	DATE	APPROVED
A	PER DADE LETTER DATED MAY 06, 2010	05/12/10	R.L.

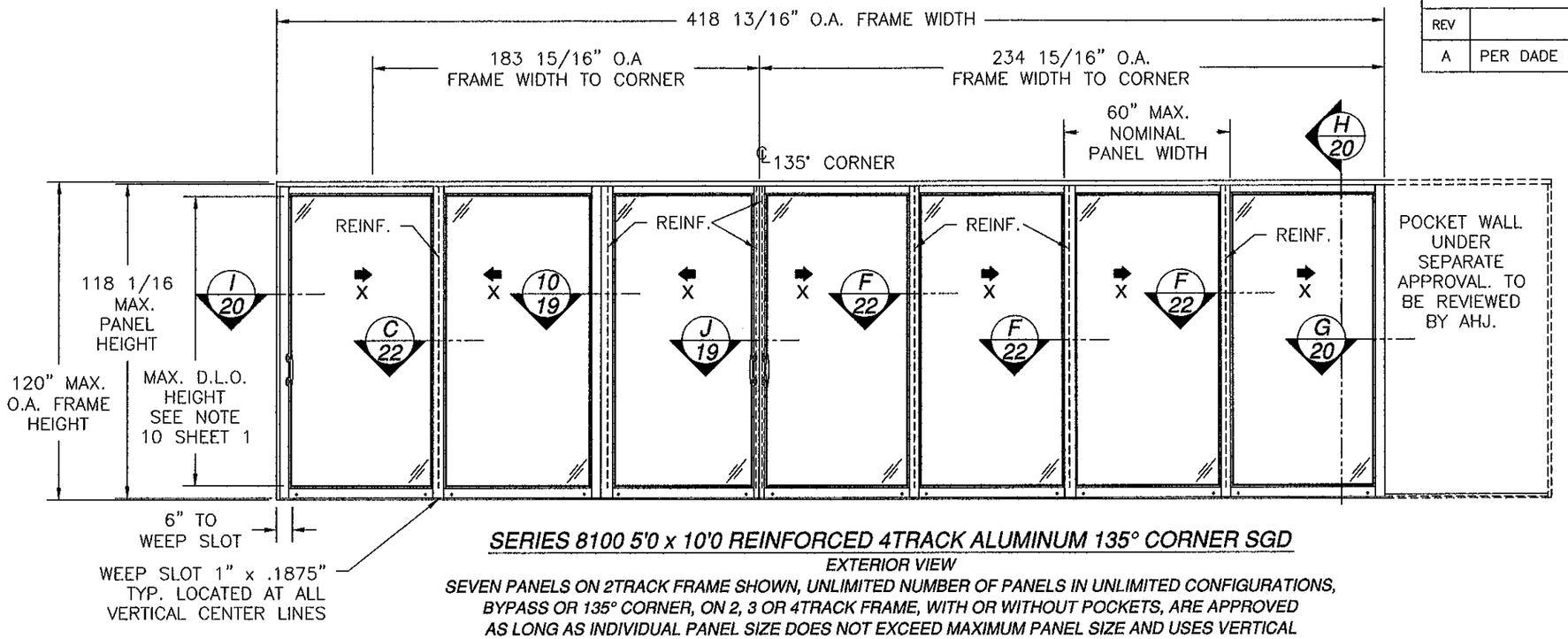

SERIES 8100 5'0 x 10'0 REINFORCED 4TRACK ALUMINUM 135° CORNER SGD

EXTERIOR VIEW

SEVEN PANELS ON 2TRACK FRAME SHOWN, UNLIMITED NUMBER OF PANELS IN UNLIMITED CONFIGURATIONS, BYPASS OR 135° CORNER, ON 2, 3 OR 4TRACK FRAME, WITH OR WITHOUT POCKETS, ARE APPROVED AS LONG AS INDIVIDUAL PANEL SIZE DOES NOT EXCEED MAXIMUM PANEL SIZE AND USES VERTICAL CONDITIONS AS SHOWN.

REINFORCED UNIT W/ SILL RISER #34

DESIGN PRESSURE RATING	*IMPACT RATING*
±70PSF	*LARGE MISSILE IMPACT*

FOR ADDITIONAL SIZES SEE SHEET 13B

PANEL HEIGHT AND D.L.O. FORMULA
PANEL HEIGHT = UNIT HEIGHT – 1 9/16"
MAXIMUM D.L.O. HEIGHT = PANEL HEIGHT – 9 1/2"
D.L.O. WIDTH = NOMINAL PANEL WIDTH – 9 1/2"

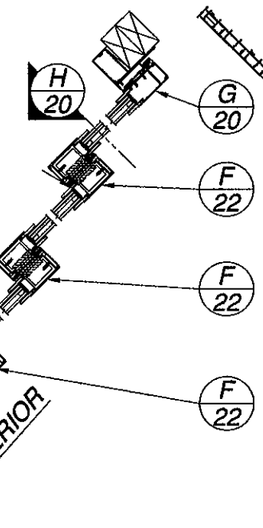

SERIES 8100 5'0 x 10'0 ALUMINUM 135° CORNER SGD

REINFORCED 4TRACK LAYOUT

Approved as complying with the Florida Building Code
Date: Nov 03, 2011
NOA# 11-0209.01
Miami Dade Product Control
By: Ishaq I. Chaudhry

WinDoor INCORPORATED
7500 AMSTERDAM DRIVE
ORLANDO, FL 32832
Phone: 407.481.8400
Fax: 407.481.0505
www.windoorinc.com

8100 SERIES ALUMINUM 90° & 135° CORNER SGD
4'0 x 12'0 AND 5'0 x 10'0 PANELS – LMI
5'0 x 10'0 135° 4TRACK ELEVATION AND LAYOUT

DRAWN:	DWG NO.	REV
TJH	08-01172	A
SCALE NTS	DATE 01/20/11	SHEET 10 OF 30

06/03/11
Luis R. Lomas P.E.
Florida No. 62514

REVISIONS			
REV	DESCRIPTION	DATE	APPROVED
A	PER DADE LETTER DATED MAY 06, 2010	05/12/10	R.L.

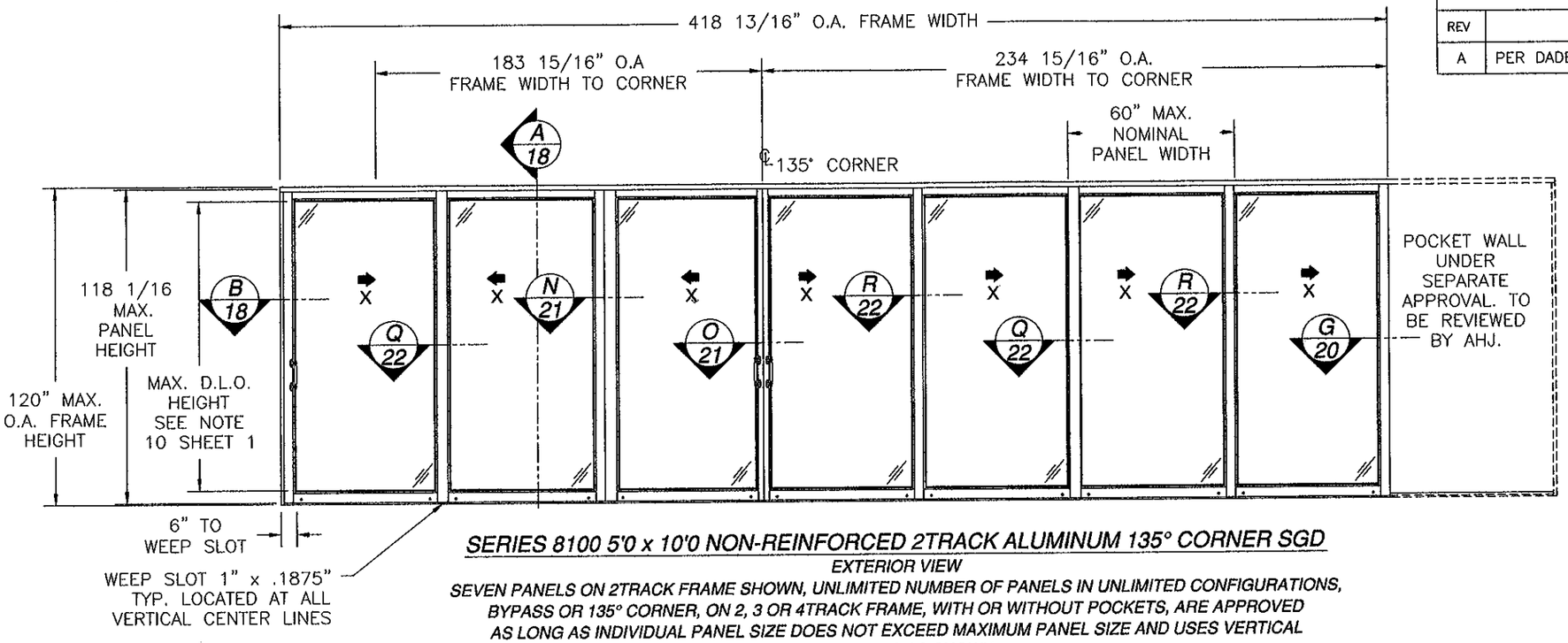

SERIES 8100 5'0 x 10'0 NON-REINFORCED 2TRACK ALUMINUM 135° CORNER SGD

EXTERIOR VIEW

SEVEN PANELS ON 2TRACK FRAME SHOWN, UNLIMITED NUMBER OF PANELS IN UNLIMITED CONFIGURATIONS, BYPASS OR 135° CORNER, ON 2, 3 OR 4TRACK FRAME, WITH OR WITHOUT POCKETS, ARE APPROVED AS LONG AS INDIVIDUAL PANEL SIZE DOES NOT EXCEED MAXIMUM PANEL SIZE AND USES VERTICAL CONDITIONS AS SHOWN.

NON-REINFORCED UNIT W/ SILL RISER #33

DESIGN PRESSURE RATING	IMPACT RATING
±50PSF	LARGE MISSILE IMPACT

FOR ADDITIONAL SIZES SEE SHEET 13B

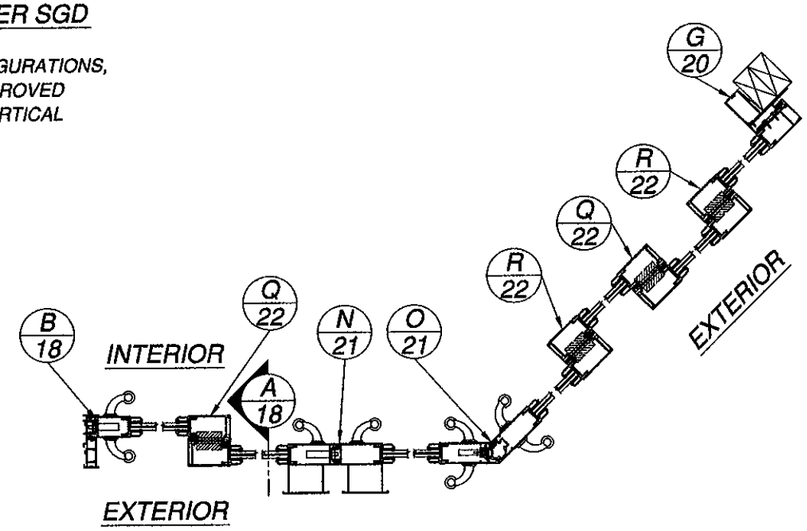

SERIES 8100 5'0 x 10'0 ALUMINUM 135° CORNER SGD

NON-REINFORCED 2TRACK LAYOUT

PANEL HEIGHT AND D.L.O. FORMULA
PANEL HEIGHT = UNIT HEIGHT – 1 9/16"
MAXIMUM D.L.O. HEIGHT = PANEL HEIGHT – 9 1/2"
D.L.O. WIDTH = NOMINAL PANEL WIDTH – 9 1/2"

Approved as complying with the Florida Building Code
Date: NOV 03, 2011
NOA# 11-0208.01
Miami-Dade Product Control
By: Ishaq I. Chanda

WinDoor INCORPORATED
7500 AMSTERDAM DRIVE
ORLANDO, FL 32832
Phone: 407.481.8400
Fax: 407.481.0505
www.windoorinc.com

8100 SERIES ALUMINUM 90° & 135° CORNER SGD
4'0 x 12'0 AND 5'0 x 10'0 PANELS – LMI
5'0 x 10'0 135° 2TRACK ELEVATION AND LAYOUT

DRAWN:	DWG NO.	REV
TJH	08-01172	A
SCALE NTS	DATE 01/20/11	SHEET 11 OF 30

06/03/11
Luis R. Lemos P.E.
Florida No. 62514

REVISIONS			
REV	DESCRIPTION	DATE	APPROVED
A	PER DADE LETTER DATED MAY 06, 2010	05/12/10	R.L.

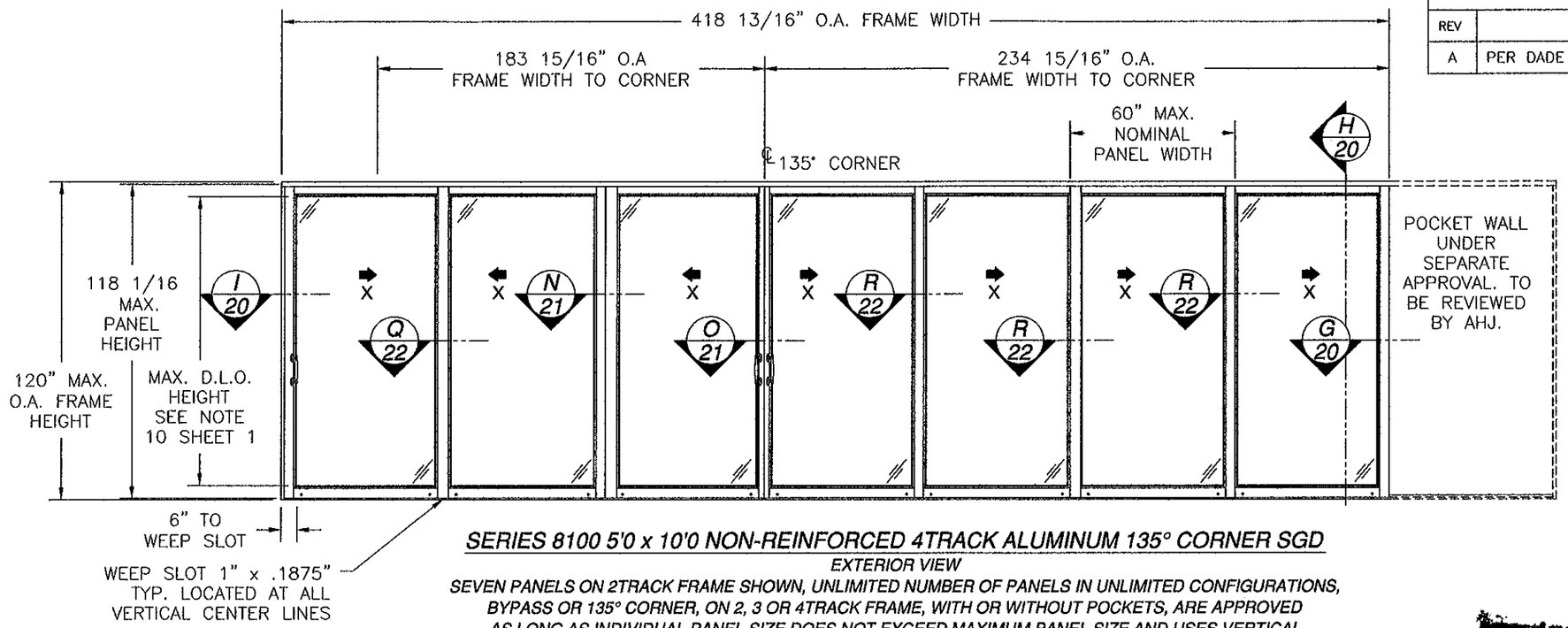

SERIES 8100 5'0 x 10'0 NON-REINFORCED 4TRACK ALUMINUM 135° CORNER SGD

EXTERIOR VIEW

SEVEN PANELS ON 2TRACK FRAME SHOWN, UNLIMITED NUMBER OF PANELS IN UNLIMITED CONFIGURATIONS, BYPASS OR 135° CORNER, ON 2, 3 OR 4TRACK FRAME, WITH OR WITHOUT POCKETS, ARE APPROVED AS LONG AS INDIVIDUAL PANEL SIZE DOES NOT EXCEED MAXIMUM PANEL SIZE AND USES VERTICAL CONDITIONS AS SHOWN.

NON-REINFORCED UNIT W/ SILL RISER #33

DESIGN PRESSURE RATING	IMPACT RATING
±50PSF	LARGE MISSILE IMPACT

FOR ADDITIONAL SIZES SEE SHEET 13B

Approved as complying with the Florida Building Code
Date Nov 03, 2011
NOA# 11-0708.01
Miami Dade Product Control
By Shaq I. Yacob

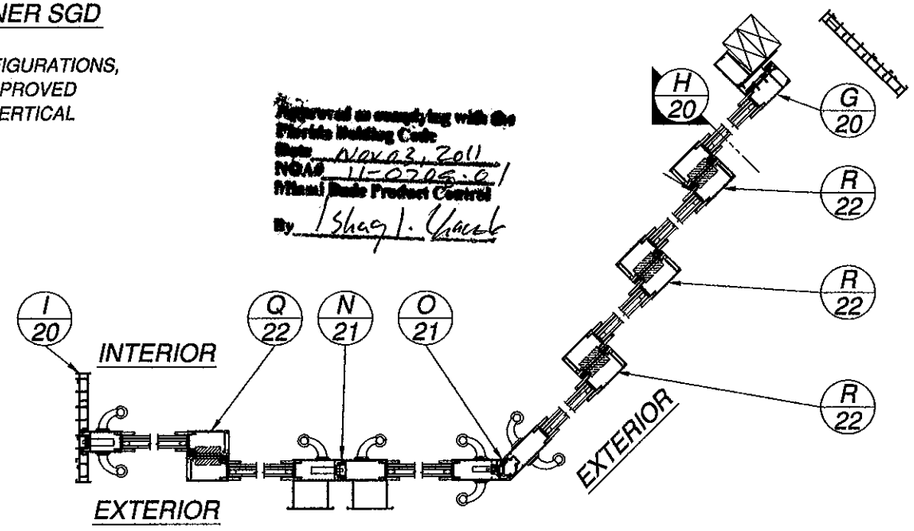

SERIES 8100 5'0 x 10'0 ALUMINUM 135° CORNER SGD

NON-REINFORCED 4TRACK LAYOUT

PANEL HEIGHT AND D.L.O. FORMULA

PANEL HEIGHT = UNIT HEIGHT – 1 9/16"

MAXIMUM D.L.O. HEIGHT = PANEL HEIGHT – 9 1/2"

D.L.O. WIDTH = NOMINAL PANEL WIDTH – 9 1/2"

WinDoor INCORPORATED
7500 AMSTERDAM DRIVE
ORLANDO, FL 32832
Phone: 407.481.8400
Fax: 407.481.0505
www.windoorinc.com

8100 SERIES ALUMINUM 90° & 135° CORNER SGD
4'0 x 12'0 AND 5'0 x 10'0 PANELS – LMI
5'0 x 10'0 135° 4TRACK ELEVATION AND LAYOUT

DRAWN:	DWG NO.	REV
TJH	08-01172	A

SCALE	DATE	SHEET
NTS	01/20/11	12 OF 30

Luis R. Lomas
06/03/11
Luis R. Lomas P.E.
Florida No. 62514

REINFORCED UNITS DESIGN PRESSURE CHARTS WITH GLAZING OPTIONS A, B, C AND D

Maximum design pressure capacity chart (PSF)

Series 8100 Alum. 90deg. Reinforced Corner SGD - LMI w/ 1 3/4" Riser #32

Height	Nominal Single Panel Width (in)													
	24.0		30.0		36.0		42.0		48.0		54.0		60.0	
(in)	Pos	Neg	Pos	Neg	Pos	Neg	Pos	Neg	Pos	Neg	Pos	Neg	Pos	Neg
80.0	45.0	105.0	45.0	105.0	45.0	105.0	45.0	105.0	45.0	105.0	45.0	120.0	45.0	120.0
84.0	45.0	105.0	45.0	105.0	45.0	105.0	45.0	105.0	45.0	105.0	45.0	120.0	45.0	120.0
96.0	45.0	105.0	45.0	105.0	45.0	105.0	45.0	105.0	45.0	105.0	45.0	115.9	45.0	109.1
98.0	45.0	105.0	45.0	105.0	45.0	105.0	45.0	105.0	45.0	105.0	45.0	112.7	45.0	105.9
108.0	45.0	105.0	45.0	105.0	45.0	105.0	45.0	105.0	45.0	100.0	45.0	98.8	45.0	92.3
114.0	45.0	105.0	45.0	105.0	45.0	105.0	45.0	103.2	45.0	93.3	45.0	92.0	45.0	85.7
120.0	45.0	105.0	45.0	105.0	45.0	105.0	45.0	97.0	45.0	87.5	45.0	86.0	45.0	80.0
126.0	45.0	105.0	45.0	105.0	45.0	103.7	45.0	91.4	45.0	82.4	-	-	-	-
132.0	45.0	105.0	45.0	105.0	45.0	98.2	45.0	86.5	45.0	77.8	-	-	-	-
138.0	45.0	105.0	45.0	105.0	45.0	93.3	45.0	82.1	45.0	73.7	-	-	-	-
144.0	45.0	105.0	45.0	104.2	45.0	88.9	45.0	78.0	45.0	70.0	-	-	-	-

Maximum design pressure capacity chart (PSF)

Series 8100 Alum. 90deg. Reinforced Corner SGD - LMI w/ 2 1/4" Riser #33

Height	Nominal Single Panel Width (in)													
	24.0		30.0		36.0		42.0		48.0		54.0		60.0	
(in)	Pos	Neg	Pos	Neg	Pos	Neg	Pos	Neg	Pos	Neg	Pos	Neg	Pos	Neg
80.0	60.0	105.0	60.0	105.0	60.0	105.0	60.0	105.0	60.0	105.0	60.0	120.0	60.0	120.0
84.0	60.0	105.0	60.0	105.0	60.0	105.0	60.0	105.0	60.0	105.0	60.0	120.0	60.0	120.0
96.0	60.0	105.0	60.0	105.0	60.0	105.0	60.0	105.0	60.0	105.0	60.0	115.9	60.0	109.1
98.0	60.0	105.0	60.0	105.0	60.0	105.0	60.0	105.0	60.0	105.0	60.0	112.7	60.0	105.9
108.0	60.0	105.0	60.0	105.0	60.0	105.0	60.0	105.0	60.0	100.0	60.0	98.8	60.0	92.3
114.0	60.0	105.0	60.0	105.0	60.0	105.0	60.0	103.2	60.0	93.3	60.0	92.0	60.0	85.7
120.0	60.0	105.0	60.0	105.0	60.0	105.0	60.0	97.0	60.0	87.5	60.0	86.0	60.0	80.0
126.0	60.0	105.0	60.0	105.0	60.0	103.7	60.0	91.4	60.0	82.4	-	-	-	-
132.0	60.0	105.0	60.0	105.0	60.0	98.2	60.0	86.5	60.0	77.8	-	-	-	-
138.0	60.0	105.0	60.0	105.0	60.0	93.3	60.0	82.1	60.0	73.7	-	-	-	-
144.0	60.0	105.0	60.0	104.2	60.0	88.9	60.0	78.0	60.0	70.0	-	-	-	-

Maximum design pressure capacity chart (PSF)

Series 8100 Alum. 90deg. Reinforced Corner SGD - LMI w/ 3" Riser #34

Height	Nominal Single Panel Width (in)													
	24.0		30.0		36.0		42.0		48.0		54.0		60.0	
(in)	Pos	Neg	Pos	Neg	Pos	Neg	Pos	Neg	Pos	Neg	Pos	Neg	Pos	Neg
80.0	80.0	105.0	80.0	105.0	80.0	105.0	80.0	105.0	80.0	105.0	80.0	120.0	80.0	120.0
84.0	80.0	105.0	80.0	105.0	80.0	105.0	80.0	105.0	80.0	105.0	80.0	120.0	80.0	120.0
96.0	80.0	105.0	80.0	105.0	80.0	105.0	80.0	105.0	80.0	105.0	80.0	115.9	80.0	109.1
98.0	80.0	105.0	80.0	105.0	80.0	105.0	80.0	105.0	80.0	105.0	80.0	112.7	80.0	105.9
108.0	80.0	105.0	80.0	105.0	80.0	105.0	80.0	105.0	80.0	100.0	80.0	98.8	80.0	92.3
114.0	80.0	105.0	80.0	105.0	80.0	105.0	80.0	103.2	80.0	93.3	80.0	92.0	80.0	85.7
120.0	80.0	105.0	80.0	105.0	80.0	105.0	80.0	97.0	80.0	87.5	80.0	86.0	80.0	80.0
126.0	80.0	105.0	80.0	105.0	80.0	103.7	80.0	91.4	80.0	82.4	-	-	-	-
132.0	80.0	105.0	80.0	105.0	80.0	98.2	80.0	86.5	77.8	77.8	-	-	-	-
138.0	80.0	105.0	80.0	105.0	80.0	93.3	80.0	82.1	73.7	73.7	-	-	-	-
144.0	80.0	105.0	80.0	104.2	80.0	88.9	78.0	78.0	70.0	70.0	-	-	-	-

Maximum design pressure capacity chart (PSF)

Series 8100 Alum. 90deg. Reinforced Corner SGD - LMI w/ 3 1/2" Riser #35

Height	Nominal Single Panel Width (in)													
	24.0		30.0		36.0		42.0		48.0		54.0		60.0	
(in)	Pos	Neg	Pos	Neg	Pos	Neg	Pos	Neg	Pos	Neg	Pos	Neg	Pos	Neg
80.0	100.0	105.0	100.0	105.0	100.0	105.0	100.0	105.0	100.0	105.0	100.0	120.0	100.0	120.0
84.0	100.0	105.0	100.0	105.0	100.0	105.0	100.0	105.0	100.0	105.0	100.0	120.0	100.0	120.0
96.0	100.0	105.0	100.0	105.0	100.0	105.0	100.0	105.0	100.0	105.0	100.0	115.9	100.0	109.1
98.0	100.0	105.0	100.0	105.0	100.0	105.0	100.0	105.0	100.0	105.0	100.0	112.7	100.0	105.9
108.0	100.0	105.0	100.0	105.0	100.0	105.0	100.0	105.0	100.0	100.0	98.8	98.8	92.3	92.3
114.0	100.0	105.0	100.0	105.0	100.0	105.0	100.0	103.2	93.3	93.3	92.0	92.0	85.7	85.7
120.0	100.0	105.0	100.0	105.0	100.0	105.0	97.0	97.0	87.5	87.5	86.0	86.0	80.0	80.0
126.0	100.0	105.0	100.0	105.0	100.0	103.7	91.4	91.4	82.4	82.4	-	-	-	-
132.0	100.0	105.0	100.0	105.0	98.2	98.2	86.5	86.5	77.8	77.8	-	-	-	-
138.0	100.0	105.0	100.0	105.0	93.3	93.3	82.1	82.1	73.7	73.7	-	-	-	-
144.0	100.0	105.0	100.0	104.2	88.9	88.9	78.0	78.0	70.0	70.0	-	-	-	-

REVISIONS			
REV	DESCRIPTION	DATE	APPROVED
A	PER DADE LETTER DATED MAY 06, 2010	05/12/10	R.L.

PANEL HEIGHT AND D.L.O. FORMULA

PANEL HEIGHT = UNIT HEIGHT – 1 9/16"

MAXIMUM D.L.O. HEIGHT = PANEL HEIGHT – 9 1/2"

D.L.O. WIDTH = NOMINAL PANEL WIDTH – 9 1/2"

NON– REINFORCED UNITS DESIGN PRESSURE CHARTS WITH GLAZING OPTIONS A, B, C, D, E AND F

Maximum design pressure capacity chart (PSF)

Series 8100 Alum. 90deg. Non-Reinforced Corner SGD - LMI w/ 1 3/4" Riser #32

Height	Nominal Single Panel Width (in)													
	24.0		30.0		36.0		42.0		48.0		54.0		60.0	
(in)	Pos	Neg	Pos	Neg	Pos	Neg	Pos	Neg	Pos	Neg	Pos	Neg	Pos	Neg
80.0	45.0	75.0	45.0	75.0	45.0	75.0	45.0	75.0	45.0	75.0	45.0	75.0	45.0	75.0
84.0	45.0	75.0	45.0	75.0	45.0	75.0	45.0	75.0	45.0	75.0	45.0	75.0	45.0	75.0
96.0	45.0	75.0	45.0	75.0	45.0	75.0	45.0	75.0	45.0	75.0	45.0	72.5	45.0	68.2
102.0	45.0	75.0	45.0	75.0	45.0	75.0	45.0	75.0	45.0	72.1	45.0	66.7	45.0	62.5
108.0	45.0	75.0	45.0	75.0	45.0	75.0	45.0	73.9	45.0	67.0	45.0	61.7	45.0	57.7
114.0	45.0	75.0	45.0	75.0	45.0	75.0	45.0	69.1	45.0	62.5	45.0	57.5	45.0	53.6
120.0	45.0	75.0	45.0	75.0	45.0	73.5	45.0	64.9	45.0	58.6	45.0	53.8	45.0	50.0

Maximum design pressure capacity chart (PSF)

Series 8100 Alum. 90deg. Non-Reinforced Corner SGD - LMI w/ 2 1/4" Riser #33

Height	Nominal Single Panel Width (in)													
	24.0		30.0		36.0		42.0		48.0		54.0		60.0	
(in)	Pos	Neg	Pos	Neg	Pos	Neg	Pos	Neg	Pos	Neg	Pos	Neg	Pos	Neg
80.0	60.0	75.0	60.0	75.0	60.0	75.0	60.0	75.0	60.0	75.0	60.0	75.0	60.0	75.0
84.0	60.0	75.0	60.0	75.0	60.0	75.0	60.0	75.0	60.0	75.0	60.0	75.0	60.0	75.0
96.0	60.0	75.0	60.0	75.0	60.0	75.0	60.0	75.0	60.0	75.0	60.0	72.5	60.0	68.2
102.0	60.0	75.0	60.0	75.0	60.0	75.0	60.0	75.0	60.0	72.1	60.0	66.7	60.0	62.5
108.0	60.0	75.0	60.0	75.0	60.0	75.0	60.0	73.9	60.0	67.0	60.0	61.7	57.7	57.7
114.0	60.0	75.0	60.0	75.0	60.0	75.0	60.0	69.1	60.0	62.5	57.5	57.5	53.6	53.6
120.0	60.0	75.0	60.0	75.0	60.0	73.5	60.0	64.9	58.6	58.6	53.8	53.8	50.0	50.0

Maximum design pressure capacity chart (PSF)

Series 8100 Alum. 90deg. Non-Reinforced Corner SGD - LMI w/ 3" Riser #34

Height	Nominal Single Panel Width (in)													
	24.0		30.0		36.0		42.0		48.0		54.0		60.0	
(in)	Pos	Neg	Pos	Neg	Pos	Neg	Pos	Neg	Pos	Neg	Pos	Neg	Pos	Neg
80.0	75.0	75.0	75.0	75.0	75.0	75.0	75.0	75.0	75.0	75.0	75.0	75.0	75.0	75.0
84.0	75.0	75.0	75.0	75.0	75.0	75.0	75.0	75.0	75.0	75.0	75.0	75.0	75.0	75.0
96.0	75.0	75.0	75.0	75.0	75.0	75.0	75.0	75.0	75.0	75.0	72.5	72.5	68.2	68.2
102.0	75.0	75.0	75.0	75.0	75.0	75.0	75.0	75.0	72.1	72.1	66.7	66.7	62.5	62.5
108.0	75.0	75.0	75.0	75.0	75.0	75.0	73.9	73.9	67.0	67.0	61.7	61.7	57.7	57.7
114.0	75.0	75.0	75.0	75.0	75.0	75.0	69.1	69.1	62.5	62.5	57.5	57.5	53.6	53.6
120.0	75.0	75.0	75.0	75.0	73.5	73.5	64.9	64.9	58.6	58.6	53.8	53.8	50.0	50.0

Approved as complying with the Florida Building Code
Date Nov 03, 2011
NOA# 11-0208.01
Miami Dade Product Control
By Ishaq I. Chanda

WinDoor INCORPORATED
7500 AMSTERDAM DRIVE
ORLANDO, FL 32832
Phone: 407.481.8400
Fax: 407.481.0505
www.windoorinc.com

8100 SERIES ALUMINUM 90° & 135° CORNER SGD
4'0 x 12'0 AND 5'0 x 10'0 PANELS – LMI
90° UNIT DESIGN PRESSURE RATING CHARTS

DRAWN:	DWG NO.	REV
TJH	08-01172	A
SCALE NTS	DATE 01/20/11	SHEET 13A OF 30

Luis R. Lomas P.E.
Florida No. 62514
06/03/11

REINFORCED UNITS DESIGN PRESSURE CHARTS WITH GLAZING OPTIONS A, B, C AND D

REVISIONS			
REV	DESCRIPTION	DATE	APPROVED
A	PER DADE LETTER DATED MAY 06, 2010	05/12/10	R.L.

Maximum design pressure capacity chart (PSF)

Series 8100 Alum. 135deg. Reinforced Corner SGD - LMI w/ 1 3/4" Riser #32

Height	Nominal Single Panel Width (in)													
	24.0		30.0		36.0		42.0		48.0		54.0		60.0	
(in)	Pos	Neg	Pos	Neg	Pos	Neg	Pos	Neg	Pos	Neg	Pos	Neg	Pos	Neg
80.0	45.0	105.0	45.0	105.0	45.0	105.0	45.0	105.0	45.0	105.0	45.0	105.0	45.0	105.0
84.0	45.0	105.0	45.0	105.0	45.0	105.0	45.0	105.0	45.0	105.0	45.0	105.0	45.0	105.0
96.0	45.0	105.0	45.0	105.0	45.0	105.0	45.0	105.0	45.0	105.0	45.0	101.4	45.0	95.5
98.0	45.0	105.0	45.0	105.0	45.0	105.0	45.0	105.0	45.0	105.0	45.0	98.6	45.0	92.6
108.0	45.0	105.0	45.0	105.0	45.0	105.0	45.0	105.0	45.0	100.0	45.0	86.4	45.0	80.8
114.0	45.0	105.0	45.0	105.0	45.0	105.0	45.0	103.2	45.0	93.3	45.0	80.5	45.0	75.0
120.0	45.0	105.0	45.0	105.0	45.0	105.0	45.0	97.0	45.0	87.5	45.0	75.3	45.0	70.0
126.0	45.0	105.0	45.0	105.0	45.0	103.7	45.0	91.4	45.0	82.4	-	-	-	-
132.0	45.0	105.0	45.0	105.0	45.0	98.2	45.0	86.5	45.0	77.8	-	-	-	-
138.0	45.0	105.0	45.0	105.0	45.0	93.3	45.0	82.1	45.0	73.7	-	-	-	-
144.0	45.0	105.0	45.0	104.2	45.0	88.9	45.0	78.0	45.0	70.0	-	-	-	-

Maximum design pressure capacity chart (PSF)

Series 8100 Alum. 135deg. Reinforced Corner SGD - LMI w/ 2 1/4" Riser #33

Height	Nominal Single Panel Width (in)													
	24.0		30.0		36.0		42.0		48.0		54.0		60.0	
(in)	Pos	Neg	Pos	Neg	Pos	Neg	Pos	Neg	Pos	Neg	Pos	Neg	Pos	Neg
80.0	60.0	105.0	60.0	105.0	60.0	105.0	60.0	105.0	60.0	105.0	60.0	105.0	60.0	105.0
84.0	60.0	105.0	60.0	105.0	60.0	105.0	60.0	105.0	60.0	105.0	60.0	105.0	60.0	105.0
96.0	60.0	105.0	60.0	105.0	60.0	105.0	60.0	105.0	60.0	105.0	60.0	101.4	60.0	95.5
98.0	60.0	105.0	60.0	105.0	60.0	105.0	60.0	105.0	60.0	105.0	60.0	98.6	60.0	92.6
108.0	60.0	105.0	60.0	105.0	60.0	105.0	60.0	105.0	60.0	100.0	60.0	86.4	60.0	80.8
114.0	60.0	105.0	60.0	105.0	60.0	105.0	60.0	103.2	60.0	93.3	60.0	80.5	60.0	75.0
120.0	60.0	105.0	60.0	105.0	60.0	105.0	60.0	97.0	60.0	87.5	60.0	75.3	60.0	70.0
126.0	60.0	105.0	60.0	105.0	60.0	103.7	60.0	91.4	60.0	82.4	-	-	-	-
132.0	60.0	105.0	60.0	105.0	60.0	98.2	60.0	86.5	60.0	77.8	-	-	-	-
138.0	60.0	105.0	60.0	105.0	60.0	93.3	60.0	82.1	60.0	73.7	-	-	-	-
144.0	60.0	105.0	60.0	104.2	60.0	88.9	60.0	78.0	60.0	70.0	-	-	-	-

Maximum design pressure capacity chart (PSF)

Series 8100 Alum. 135deg. Reinforced Corner SGD - LMI w/ 3" Riser #34

Height	Nominal Single Panel Width (in)													
	24.0		30.0		36.0		42.0		48.0		54.0		60.0	
(in)	Pos	Neg	Pos	Neg	Pos	Neg	Pos	Neg	Pos	Neg	Pos	Neg	Pos	Neg
80.0	80.0	105.0	80.0	105.0	80.0	105.0	80.0	105.0	80.0	105.0	80.0	105.0	80.0	105.0
84.0	80.0	105.0	80.0	105.0	80.0	105.0	80.0	105.0	80.0	105.0	80.0	105.0	80.0	105.0
96.0	80.0	105.0	80.0	105.0	80.0	105.0	80.0	105.0	80.0	105.0	80.0	101.4	80.0	95.5
98.0	80.0	105.0	80.0	105.0	80.0	105.0	80.0	105.0	80.0	105.0	80.0	98.6	80.0	92.6
108.0	80.0	105.0	80.0	105.0	80.0	105.0	80.0	105.0	80.0	100.0	80.0	86.4	80.0	80.8
114.0	80.0	105.0	80.0	105.0	80.0	105.0	80.0	103.2	80.0	93.3	80.0	80.5	75.0	75.0
120.0	80.0	105.0	80.0	105.0	80.0	105.0	80.0	97.0	80.0	87.5	75.3	75.3	70.0	70.0
126.0	80.0	105.0	80.0	105.0	80.0	103.7	80.0	91.4	80.0	82.4	-	-	-	-
132.0	80.0	105.0	80.0	105.0	80.0	98.2	80.0	86.5	77.8	77.8	-	-	-	-
138.0	80.0	105.0	80.0	105.0	80.0	93.3	80.0	82.1	73.7	73.7	-	-	-	-
144.0	80.0	105.0	80.0	104.2	80.0	88.9	78.0	78.0	70.0	70.0	-	-	-	-

Maximum design pressure capacity chart (PSF)

Series 8100 Alum. 135deg. Reinforced Corner SGD - LMI w/ 3 1/2" Riser #35

Height	Nominal Single Panel Width (in)													
	24.0		30.0		36.0		42.0		48.0		54.0		60.0	
(in)	Pos	Neg	Pos	Neg	Pos	Neg	Pos	Neg	Pos	Neg	Pos	Neg	Pos	Neg
80.0	100.0	105.0	100.0	105.0	100.0	105.0	100.0	105.0	100.0	105.0	100.0	105.0	100.0	105.0
84.0	100.0	105.0	100.0	105.0	100.0	105.0	100.0	105.0	100.0	105.0	100.0	105.0	100.0	105.0
96.0	100.0	105.0	100.0	105.0	100.0	105.0	100.0	105.0	100.0	105.0	100.0	101.4	95.5	95.5
98.0	100.0	105.0	100.0	105.0	100.0	105.0	100.0	105.0	100.0	105.0	98.6	98.6	92.6	92.6
108.0	100.0	105.0	100.0	105.0	100.0	105.0	100.0	105.0	100.0	100.0	86.4	86.4	80.8	80.8
114.0	100.0	105.0	100.0	105.0	100.0	105.0	100.0	103.2	93.3	93.3	80.5	80.5	75.0	75.0
120.0	100.0	105.0	100.0	105.0	100.0	105.0	97.0	97.0	87.5	87.5	75.3	75.3	70.0	70.0
126.0	100.0	105.0	100.0	105.0	100.0	103.7	91.4	91.4	82.4	82.4	-	-	-	-
132.0	100.0	105.0	100.0	105.0	98.2	98.2	86.5	86.5	77.8	77.8	-	-	-	-
138.0	100.0	105.0	100.0	105.0	93.3	93.3	82.1	82.1	73.7	73.7	-	-	-	-
144.0	100.0	105.0	100.0	104.2	88.9	88.9	78.0	78.0	70.0	70.0	-	-	-	-

PANEL HEIGHT AND D.L.O. FORMULA

PANEL HEIGHT = UNIT HEIGHT – 1 9/16"

MAXIMUM D.L.O. HEIGHT = PANEL HEIGHT – 9 1/2"

D.L.O. WIDTH = NOMINAL PANEL WIDTH – 9 1/2"

NON– REINFORCED UNITS DESIGN PRESSURE CHARTS WITH GLAZING OPTIONS A, B, C, D, E AND F

Maximum design pressure capacity chart (PSF)

Series 8100 Alum. 135deg. Non-Reinforced Corner SGD - LMI w/ 1 3/4" Riser #32

Height	Nominal Single Panel Width (in)													
	24.0		30.0		36.0		42.0		48.0		54.0		60.0	
(in)	Pos	Neg	Pos	Neg	Pos	Neg	Pos	Neg	Pos	Neg	Pos	Neg	Pos	Neg
80.0	45.0	75.0	45.0	75.0	45.0	75.0	45.0	75.0	45.0	75.0	45.0	75.0	45.0	75.0
84.0	45.0	75.0	45.0	75.0	45.0	75.0	45.0	75.0	45.0	75.0	45.0	75.0	45.0	75.0
96.0	45.0	75.0	45.0	75.0	45.0	75.0	45.0	75.0	45.0	75.0	45.0	72.5	45.0	68.2
102.0	45.0	75.0	45.0	75.0	45.0	75.0	45.0	75.0	45.0	72.1	45.0	66.7	45.0	62.5
108.0	45.0	75.0	45.0	75.0	45.0	75.0	45.0	73.9	45.0	67.0	45.0	61.7	45.0	57.7
114.0	45.0	75.0	45.0	75.0	45.0	75.0	45.0	69.1	45.0	62.5	45.0	57.5	45.0	53.6
120.0	45.0	75.0	45.0	75.0	45.0	73.5	45.0	64.9	45.0	58.6	45.0	53.8	45.0	50.0

Maximum design pressure capacity chart (PSF)

Series 8100 Alum. 135deg. Non-Reinforced Corner SGD - LMI w/ 2 1/4" Riser #33

Height	Nominal Single Panel Width (in)													
	24.0		30.0		36.0		42.0		48.0		54.0		60.0	
(in)	Pos	Neg	Pos	Neg	Pos	Neg	Pos	Neg	Pos	Neg	Pos	Neg	Pos	Neg
80.0	60.0	75.0	60.0	75.0	60.0	75.0	60.0	75.0	60.0	75.0	60.0	75.0	60.0	75.0
84.0	60.0	75.0	60.0	75.0	60.0	75.0	60.0	75.0	60.0	75.0	60.0	75.0	60.0	75.0
96.0	60.0	75.0	60.0	75.0	60.0	75.0	60.0	75.0	60.0	75.0	60.0	72.5	60.0	68.2
102.0	60.0	75.0	60.0	75.0	60.0	75.0	60.0	75.0	60.0	72.1	60.0	66.7	60.0	62.5
108.0	60.0	75.0	60.0	75.0	60.0	75.0	60.0	73.9	60.0	67.0	60.0	61.7	57.7	57.7
114.0	60.0	75.0	60.0	75.0	60.0	75.0	60.0	69.1	60.0	62.5	57.5	57.5	53.6	53.6
120.0	60.0	75.0	60.0	75.0	60.0	73.5	60.0	64.9	58.6	58.6	53.8	53.8	50.0	50.0

Maximum design pressure capacity chart (PSF)

Series 8100 Alum. 135deg. Non-Reinforced Corner SGD - LMI w/ 3" Riser #34

Height	Nominal Single Panel Width (in)													
	24.0		30.0		36.0		42.0		48.0		54.0		60.0	
(in)	Pos	Neg	Pos	Neg	Pos	Neg	Pos	Neg	Pos	Neg	Pos	Neg	Pos	Neg
80.0	75.0	75.0	75.0	75.0	75.0	75.0	75.0	75.0	75.0	75.0	75.0	75.0	75.0	75.0
84.0	75.0	75.0	75.0	75.0	75.0	75.0	75.0	75.0	75.0	75.0	75.0	75.0	75.0	75.0
96.0	75.0	75.0	75.0	75.0	75.0	75.0	75.0	75.0	75.0	75.0	72.5	72.5	68.2	68.2
102.0	75.0	75.0	75.0	75.0	75.0	75.0	75.0	75.0	72.1	72.1	66.7	66.7	62.5	62.5
108.0	75.0	75.0	75.0	75.0	75.0	75.0	73.9	73.9	67.0	67.0	61.7	61.7	57.7	57.7
114.0	75.0	75.0	75.0	75.0	75.0	75.0	69.1	69.1	62.5	62.5	57.5	57.5	53.6	53.6
120.0	75.0	75.0	75.0	75.0	73.5	73.5	64.9	64.9	58.6	58.6	53.8	53.8	50.0	50.0

Approved as complying with the Florida Building Code
Date NOV 03, 2011
NOA# 11-0209.01
Miami Dade Product Control
By Shagl Chanla

WinDoor INCORPORATED
7500 AMSTERDAM DRIVE
ORLANDO, FL 32832
Phone: 407.481.8400
Fax: 407.481.0505
www.windoorinc.com

8100 SERIES ALUMINUM 90° & 135° CORNER SGD
4'0 x 12'0 AND 5'0 x 10'0 PANELS – LMI
135° UNIT DESIGN PRESSURE RATING CHARTS

DRAWN:	DWG NO.	REV
TJH	08-01172	A
SCALE NTS	DATE 01/20/11	SHEET 13B OF 30

Luis R. Lomas P.E.
Florida No. 62514
06/03/11

REVISIONS			
REV	DESCRIPTION	DATE	APPROVED
A	PER DADE LETTER DATED MAY 06, 2010	05/12/10	R.L.

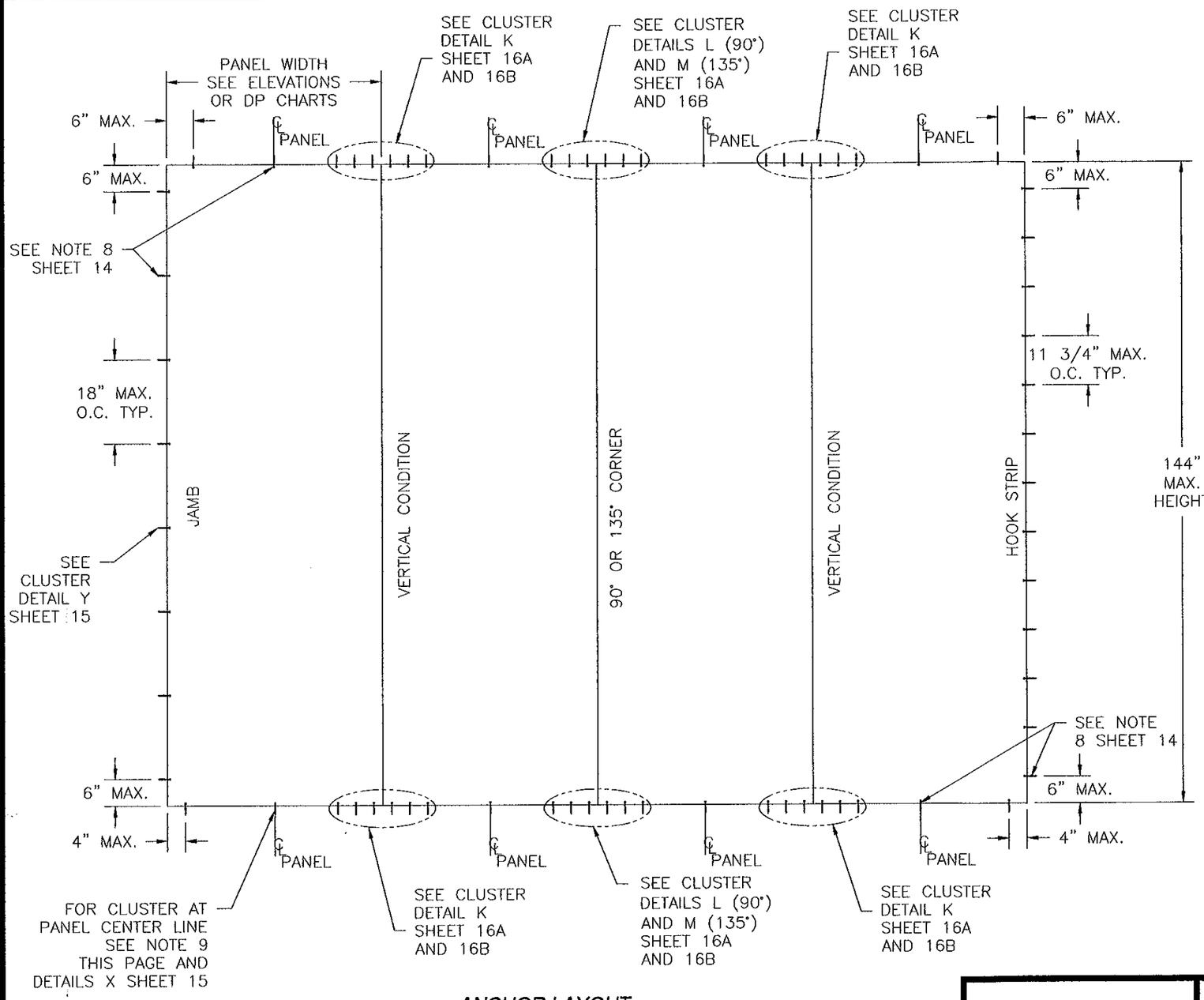

ANCHOR LAYOUT

4PANEL UNIT SHOWN, APPLICABLE TO ALL CONFIGURATIONS. SEE CHARTS SHEET 15 FOR NUMBER OF ANCHORS REQUIRED.

ANCHORING NOTES:

1) ALL FRAME SYSTEMS, 2 TRACK, 3 TRACK AND 4 TRACK, HAVE TWO ANCHORS AT EACH LOCATION SHOWN IN HEAD, SILL AND JAMBS.
2) ALL FRAME SYSTEMS, 2 TRACK, 3 TRACK AND 4 TRACK, HAVE ONE ANCHOR AT EACH LOCATION IN HOOK STRIP.
3) FOR ANCHORING INTO MASONRY/CONCRETE THROUGH A PROPERLY SECURED 1X NON--STRUCTURAL WOOD BUCK USE 1/4" ITW OR ELCO ULTRACON TAPCON WITH SUFFICIENT LENGTH TO ACHIEVE A 1 1/4" MINIMUM EMBEDMENT INTO SUBSTRATE WITH 2 1/2" MINIMUM EDGE DISTANCE AND 2 3/8" MINIMUM SEPARATION. LOCATE ANCHORS AS SHOWN IN ELEVATIONS AND INSTALLATION DETAILS.
4) FOR ANCHORING INTO WOOD FRAMING, 2X BUCK OR 2X WOOD BACKED 20 GA. MINIMUM STEEL STUD USE #14 WOOD SCREW WITH SUFFICIENT LENGTH TO ACHIEVE A 1 3/4" MINIMUM EMBEDMENT INTO SUBSTRATE WITH 1" MINIMUM EDGE DISTANCE. LOCATE ANCHORS AS SHOWN IN ELEVATIONS AND INSTALLATION DETAILS.
5) SHIM AS REQUIRED AT EACH INSTALLATION ANCHOR WITH LOAD BEARING SHIM. SHIM WHERE SPACE OF 1/16" OR GREATER OCCURS. MAXIMUM ALLOWABLE LOAD BEARING SHIM TO BE 1/4".
6) ALL FASTENERS TO BE CORROSION RESISTANT.
7) INSTALLATION ANCHORS SHALL BE INSTALLED IN ACCORDANCE WITH ANCHOR MANUFACTURER'S INSTALLATION INSTRUCTIONS, AND ANCHORS SHALL NOT BE USED IN SUBSTRATES WITH STRENGTHS LESS THAN THE MINIMUM STRENGTH SPECIFIED BELOW:
   A. WOOD – MINIMUM SPECIFIC GRAVITY OF G=0.42
   B. CONCRETE – MINIMUM COMPRESSIVE STRENGTH OF 2,700 PSI.
   C. MASONRY – STRENGTH CONFORMANCE TO ASTM C-90, GRADE N, TYPE 1 (OR GREATER) MIN fc'=1.900PSI.
   D. METAL FRAMING – 20 GA (.039) MINIMUM THICKNESS WITH 2X WOOD BACKING.
8) THERE ARE TWO (2) INSTALLATION ANCHORS AT EACH ANCHOR LOCATION IN HEAD, SILL AND JAMBS. THERE IS ONLY ONE (1) INSTALLATION ANCHOR AT EACH ANCHOR LOCATION IN HOOK STRIP.
9) FOR PANELS UP TO 48" WIDE INSTALL ONE CLUSTER OF ANCHORS AT PANEL CENTER LINE SEE DETAIL
   FOR PANELS GREATER THAN 48" UP TO 60" WIDE INSTALL TWO CLUSTERS OF ANCHORS AT PANEL CENTER LINE SEE DETAIL

Approved as complying with the Florida Building Code
Date NOV 03, 2011
NOA# 11-0206.01
Miami Dade Product Control
By

WinDoor INCORPORATED
7500 AMSTERDAM DRIVE
ORLANDO, FL 32832
Phone: 407.481.8400
Fax: 407.481.0505
www.windoorinc.com

8100 SERIES ALUMINUM 90° & 135° CORNER SGD
4'0 x 12'0 AND 5'0 x 10'0 PANELS – LMI
4'0 x 12'0 ANCHORING LAYOUT AND NOTES

DRAWN:	DWG NO.	REV
TJH	08-01172	A
SCALE NTS	DATE 01/20/11	SHEET 14 OF 30

06/03/11
Luis R. Lomas P.E.
Florida No. 62514

REVISIONS			
REV	DESCRIPTION	DATE	APPROVED
A	PER DADE LETTER DATED MAY 06, 2010	05/12/10	R.L.

Number of anchor locations required at hookstrip (1 anchor per location)

Height (in)	Single Panel Width (in)						
	24.0	30.0	36.0	42.0	48.0	54.0	60.0
80.0	7	7	7	7	7	7	7
84.0	8	8	8	8	8	8	8
96.0	9	9	9	9	9	9	9
98.0	9	9	9	9	9	9	9
108.0	10	10	10	10	10	10	10
114.0	10	10	10	10	10	10	10
120.0	11	11	11	11	11	11	11
126.0	11	11	11	11	11	-	-
132.0	12	12	12	12	12	-	-
138.0	12	12	12	12	12	-	-
144.0	13	13	13	13	13	-	-

Total Number of anchors required at details K, L (90°), and M (135°) Head and Sill

Height (in)	Single Panel Width (in)						
	24.0	30.0	36.0	42.0	48.0	54.0	60.0
80.0	4.0	8.0	8.0	8.0	8.0	8.0	12.0
84.0	8.0	8.0	8.0	8.0	8.0	12.0	12.0
96.0	8.0	8.0	8.0	8.0	12.0	12.0	12.0
98.0	8.0	8.0	8.0	8.0	12.0	12.0	12.0
108.0	8.0	8.0	8.0	12.0	12.0	12.0	12.0
114.0	8.0	8.0	12.0	12.0	12.0	12.0	12.0
120.0	8.0	8.0	12.0	12.0	12.0	12.0	12.0
126.0	8.0	8.0	12.0	12.0	12.0	-	-
132.0	8.0	12.0	12.0	12.0	12.0	-	-
138.0	8.0	12.0	12.0	12.0	12.0	-	-
144.0	8.0	12.0	12.0	12.0	12.0	-	-

Number of anchor locations required at jamb (2 anchors per location)

Height (in)	Single Panel Width (in)						
	24.0	30.0	36.0	42.0	48.0	54.0	60.0
80.0	5	5	5	5	5	5	5
84.0	5	5	5	5	5	5	5
96.0	6	6	6	6	6	6	6
98.0	6	6	6	6	6	6	6
108.0	7	7	7	7	7	7	7
114.0	7	7	7	7	7	7	7
120.0	7	7	7	7	7	7	7
126.0	8	8	8	8	8	-	-
132.0	8	8	8	8	8	-	-
138.0	8	8	8	8	8	-	-
144.0	9	9	9	9	9	-	-

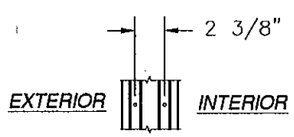

DETAIL Y
2TRACK UNIT

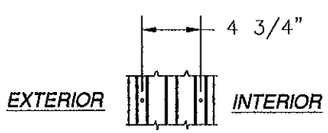

DETAIL Y
3TRACK UNIT

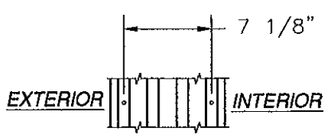

DETAIL Y
4TRACK UNIT

DETAILS FOR CLUSTER AT JAMBS

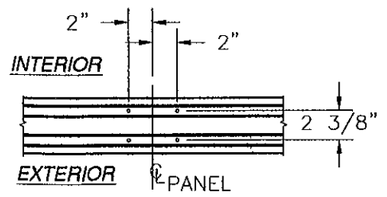

DETAIL X
2TRACK UNIT

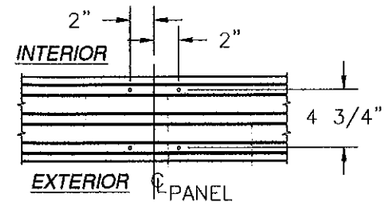

DETAIL X
3TRACK UNIT

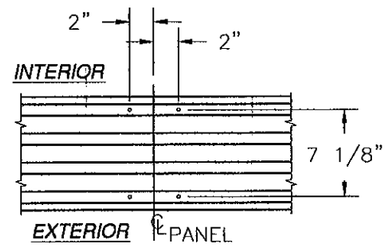

DETAIL X
4TRACK UNIT

2 CLUSTERS = 4 ANCHORS TOTAL
FOR PANELS GREATER THAN 48" UP TO 60" WIDTH

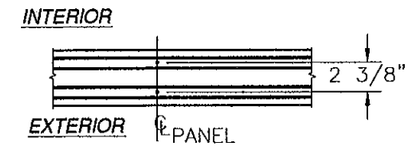

DETAIL X
2TRACK UNIT

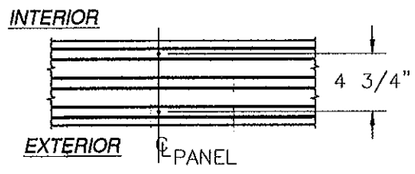

DETAIL X
3TRACK UNIT

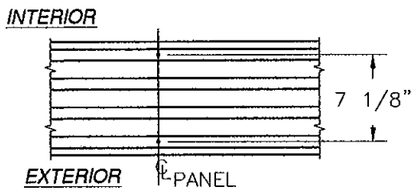

DETAIL X
4TRACK UNIT

1 CLUSTER = 2 ANCHORS TOTAL
FOR PANELS GREATER UP TO 48" WIDTH

DETAILS FOR ANCHORS AT CENTER OF PANELS

Approved as complying with the Florida Building Code
Date Nov 03, 2011
NOA# 11-0209.01
Miami Dade Product Control
By Ishaq I. Chanda

WinDoor INCORPORATED
7500 AMSTERDAM DRIVE
ORLANDO, FL 32832
Phone: 407.481.8400
Fax: 407.481.0505
www.windoorinc.com

8100 SERIES ALUMINUM 90° & 135° CORNER SGD
4'0 x 12'0 AND 5'0 x 10'0 PANELS – LMI
5'0 x 10'0 ANCHORING LAYOUT AND NOTES

DRAWN:	DWG NO.	REV
TJH	08-01172	A
SCALE NTS	DATE 01/20/11	SHEET 15 OF 30

06/03/11
Luis R. Lomas P.E.
Florida No. 62514

REVISIONS			
REV	DESCRIPTION	DATE	APPROVED
A	PER DADE LETTER DATED MAY 06, 2010	05/12/10	R.L.

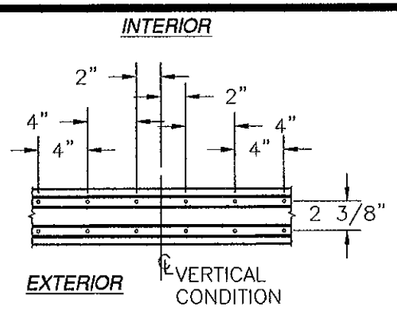

DETAIL K
2TRACK UNIT

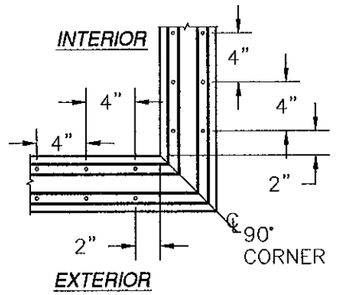

DETAIL L
2TRACK UNIT

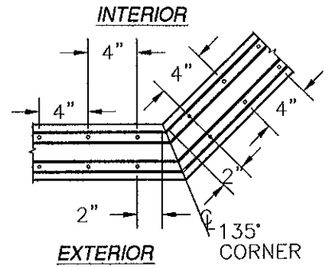

DETAIL M
2TRACK UNIT

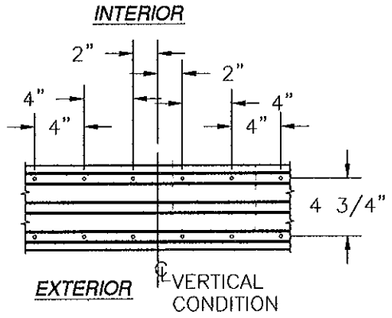

DETAIL K
3TRACK UNIT

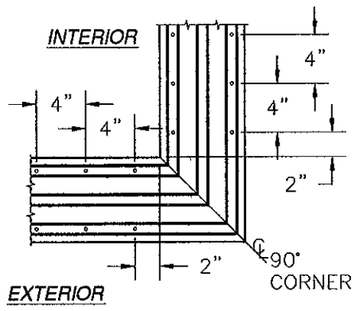

DETAIL L
3TRACK UNIT

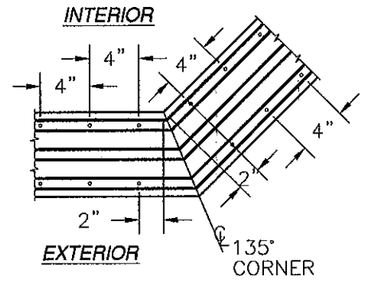

DETAIL M
3TRACK UNIT

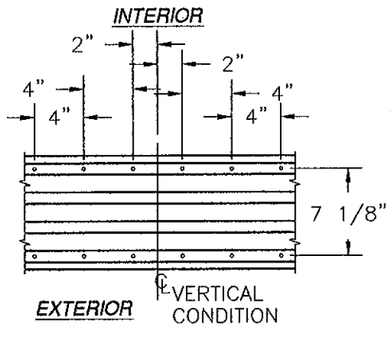

DETAIL K
4TRACK UNIT

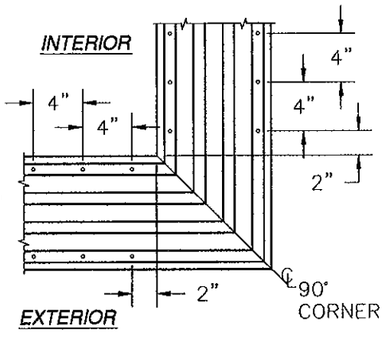

DETAIL L
4TRACK UNIT

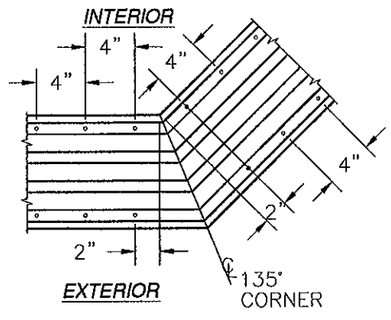

DETAIL M
4TRACK UNIT

DETAILS FOR 6 CLUSTERS = 12 ANCHORS TOTAL

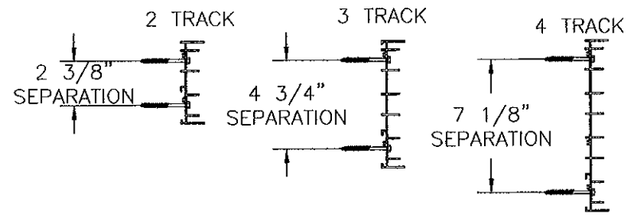

JAMB ANCHOR LOCATIONS

HOOKSTRIP ANCHOR LOCATION

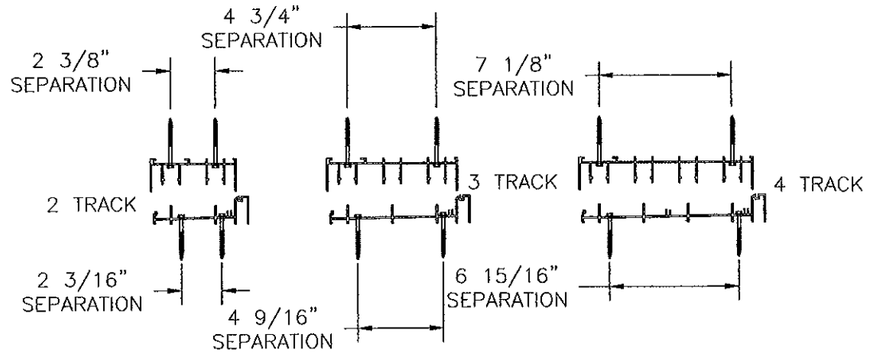

HEAD & SILL ANCHOR LOCATIONS

PANEL CONSTRUCTION:
ALL PANELS ARE CONSTRUCTED FROM EXTRUDED 6063-T6 ALUMINUM. VERTICAL STILES ARE NOTCHED TO RECEIVE HORIZONTAL RAILS. EACH RAIL IS SECURED TO STILES WITH (3) #10 x 1 1/4" SQ. DRIVE SCREW AT EACH END, ITEM #63. ALL PANELS HAVE AN INTERIOR AND EXTERIOR APPLIED GLAZING STOP.

FRAME CONSTRUCTION:
EACH FRAME CORNER IS NOTCHED AND BUTTED. HEAD AND SILL ARE SECURED TO JAMBS WITH #7 TYPE A SS SCREW, ITEM #64, (2) AT EACH CORNER ON 2 TRACK, (2) AT 3 TRACK FRAME AND (3) AT EACH CORNER ON 4 TRACK FRAME.

Approved as complying with the Florida Building Code
Date Nov 03, 2011
NOA# 11-0209.01
Miami Dade Product Control
By Ishaq I. Chanda

WinDoor INCORPORATED
7500 AMSTERDAM DRIVE
ORLANDO, FL 32832
Phone: 407.481.8400
Fax: 407.481.0505
www.windoorinc.com

8100 SERIES ALUMINUM 90° & 135° CORNER SGD
4'0 x 12'0 AND 5'0 x 10'0 PANELS - LMI
CLUSTER AND ANCHOR LOCATION DETAILS

DRAWN:	DWG NO.	REV
TJH	08-01172	A
SCALE NTS	DATE 01/20/11	SHEET 16A OF 30

Luis R. Lomas
06/03/11
Luis R. Lomas P.E.
Florida No. 62514

REVISIONS			
REV	DESCRIPTION	DATE	APPROVED
A	PER DADE LETTER DATED MAY 06, 2010	05/12/10	R.L.

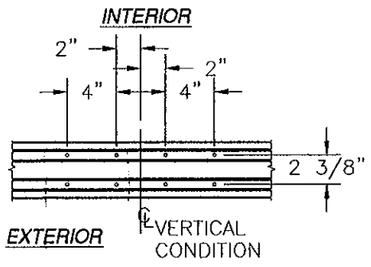

DETAIL K
2TRACK UNIT

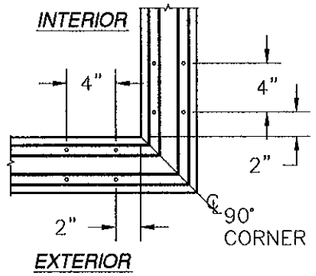

DETAIL L
2TRACK UNIT

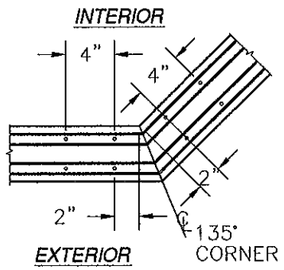

DETAIL M
2TRACK UNIT

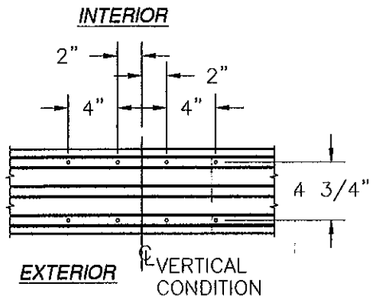

DETAIL K
3TRACK UNIT

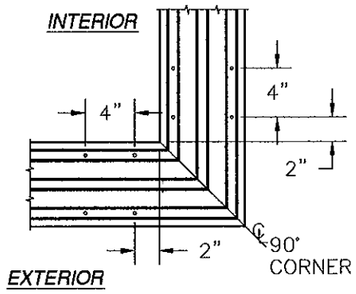

DETAIL L
3TRACK UNIT

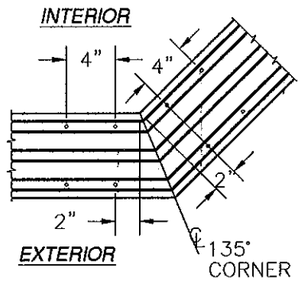

DETAIL M
3TRACK UNIT

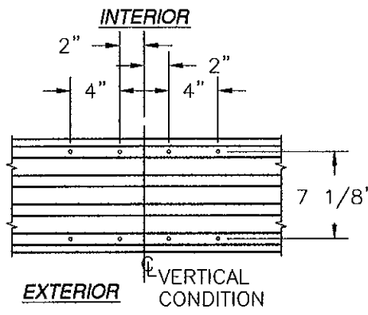

DETAIL K
4TRACK UNIT

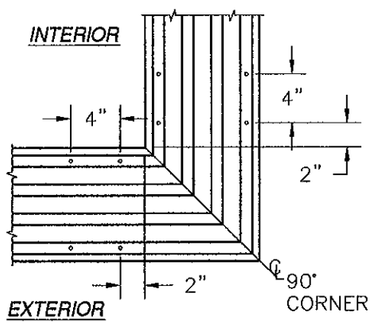

DETAIL L
4TRACK UNIT

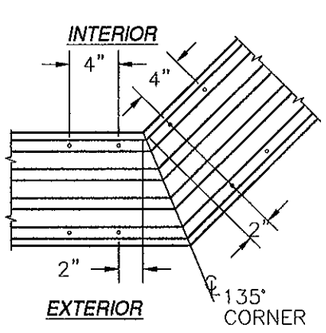

DETAIL M
4TRACK UNIT

DETAILS FOR 4 CLUSTERS = 8 ANCHORS TOTAL

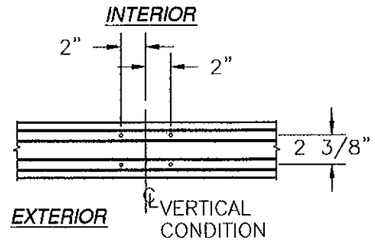

DETAIL K
2TRACK UNIT

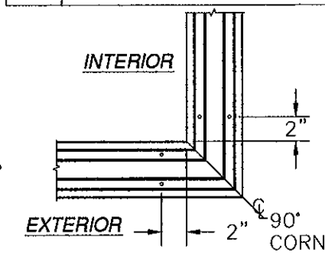

DETAIL L
2TRACK UNIT

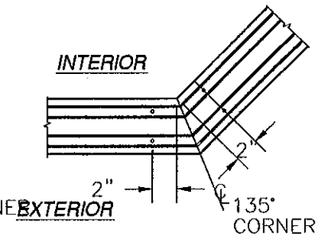

DETAIL M
2TRACK UNIT

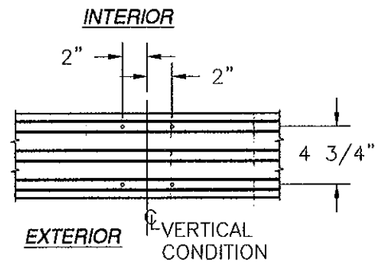

DETAIL K
3TRACK UNIT

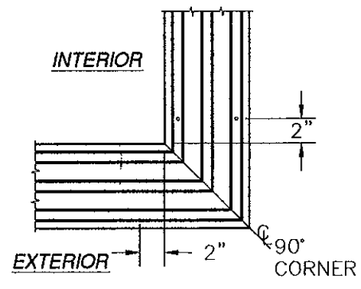

DETAIL L
3TRACK UNIT

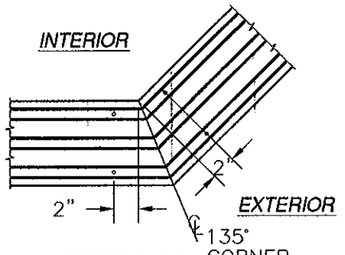

DETAIL M
3TRACK UNIT

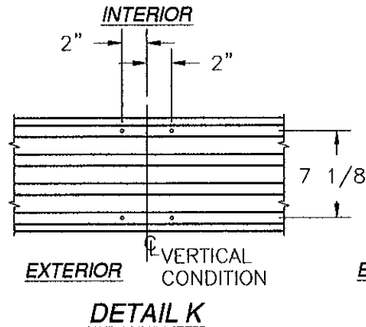

DETAIL K
4TRACK UNIT

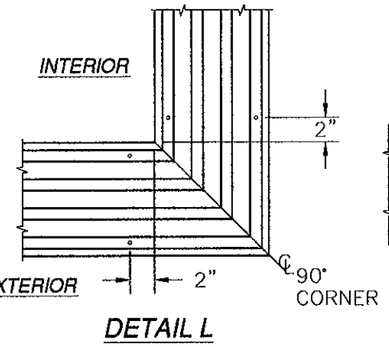

DETAIL L
4TRACK UNIT

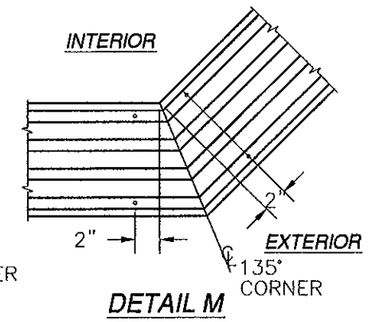

DETAIL M
4TRACK UNIT

DETAILS FOR 2 CLUSTERS = 4 ANCHORS TOTAL

Approved as complying with the Florida Building Code, 2011
Date Nov 03, 2011
NOA# 11-0209.01
Miami Dade Product Control
By Ishaq I. Chaudhry

WinDoor INCORPORATED
7500 AMSTERDAM DRIVE
ORLANDO, FL 32832
Phone: 407.481.8400
Fax: 407.481.0505
www.windoorinc.com

8100 SERIES ALUMINUM 90° & 135° CORNER SGD
4'0 x 12'0 AND 5'0 x 10'0 PANELS – LMI
CLUSTER AND ANCHOR LOCATION DETAILS

DRAWN:	DWG NO.	REV
TJH	08-01172	A
SCALE NTS	DATE 01/20/11	SHEET 16B OF 30

06/03/11
Luis R. Lomas P.E.
Florida No. 62514

PARTS LIST				
NO.	PART NUMBER	DESCRIPTION	MANUFACTURER	MATERIAL
1	FS-02068	2TRACK FRAME HEAD	KEYMARK	ALUMINUM 6063-T6
2	FS-02067	2TRACK FRAME JAMB	KEYMARK	ALUMINUM 6063-T6
3	S-44116	2TRACK SILL PAN	KEYMARK	ALUMINUM 6063-T6
4	S-44122	2TRACK SILL INSERT	KEYMARK	ALUMINUM 6063-T6
5	FS-02071	4TRACK FRAME HEAD	KEYMARK	ALUMINUM 6063-T6
6	FS-02070	4TRACK FRAME JAMB	KEYMARK	ALUMINUM 6063-T6
7	S-44118	4TRACK SILL PAN	KEYMARK	ALUMINUM 6063-T6
8	S-44124	4TRACK SILL INSERT	KEYMARK	ALUMINUM 6063-T6
9	FS-02180	3TRACK FRAME HEAD	KEYMARK	ALUMINUM 6063-T6
10	FS-02181	3TRACK FRAME JAMB	KEYMARK	ALUMINUM 6063-T6
11	S-44123	3TRACK SILL PAN	KEYMARK	ALUMINUM 6063-T6
12	S-44117	3T SILL INSERT	KEYMARK	ALUMINUM 6063-T6
13	FS-01882	HEAD INSERT	KEYMARK	ALUMINUM 6063-T6
14	FS-01883	FRAME JAMB INSERT	KEYMARK	ALUMINUM 6063-T6
15	FH-01869	TOP RAIL	KEYMARK	ALUMINUM 6063-T6
16	FH04723	BOTTOM RAIL	KEYMARK	ALUMINUM 6063-T6
17	FH-01871	LOCK STILE	KEYMARK	ALUMINUM 6063-T6
18	FH-05889	90° CORNER STILE	KEYMARK	ALUMINUM 6063-T6
19	FS-05890	90° CORNER CLIP	KEYMARK	ALUMINUM 6063-T6
20	FH-04767	FEMALE BUTT STILE EXT. OFFSET	KEYMARK	ALUMINUM 6063-T6
21	FH-04750	MALE BUTT STILE EXT. OFFSET	KEYMARK	ALUMINUM 6063-T6
22	FH-03916	BUTT STILE REINFORCEMENT	KEYMARK	ALUMINUM 6005-T5
23	FS-04754	PLAIN STILE INTERLOCK	KEYMARK	ALUMINUM 6063-T6
24	FS-04755	PLAIN STILE INTERLOCK COVER	KEYMARK	ALUMINUM 6063-T6
25	FS-04751	INTERLOCK COVER	KEYMARK	ALUMINUM 6063-T6
26	FS-02726	STILE JAMB INSERT	KEYMARK	ALUMINUM 6063-T6
27	FS-02726	PANEL STILE JAMB INSERT	KEYMARK	ALUMINUM 6063-T6
28	FH-01877	9/16" HORIZONTAL GLASS STOP	KEYMARK	ALUMINUM 6063-T6
29	FH-01878	9/16" VERTICAL GLASS STOP	KEYMARK	ALUMINUM 6063-T6
30	FS-01879	1" HORIZONTAL GLASS STOP	KEYMARK	ALUMINUM 6063-T6
31	FS-01880	1" VERTICAL GLASS STOP	KEYMARK	ALUMINUM 6063-T6
32	FH-03693	1 3/4" SILL RISER	KEYMARK	ALUMINUM 6063-T6
33	FH-03652	2 1/4" SILL RISER	KEYMARK	ALUMINUM 6063-T6
34	FH-03653	3" SILL RISER	KEYMARK	ALUMINUM 6063-T6
35	FH-03654	3 1/2" SILL RISER	KEYMARK	ALUMINUM 6063-T6
36		LMI GLAZING SEE SHEET 17		
37	FS-03684	POCKET DOOR HOOK STRIP	KEYMARK	ALUMINUM 6063-T6
38	FS-04477	POCKET DOOR HOOK STRIP MOUNT	KEYMARK	ALUMINUM 6063-T6
39	FS-04476	POCKET DOOR HOOK STRIP COVER	KEYMARK	ALUMINUM 6063-T6
40	FH-05045	INTERLOCK REINFORCING BAR	KEYMARK	ALUMINUM 6005-T5

PARTS LIST CONTINUED ON SHEET 18

REVISIONS			
REV	DESCRIPTION	DATE	APPROVED
A	PER DADE LETTER DATED MAY 06, 2010	05/12/10	R.L.

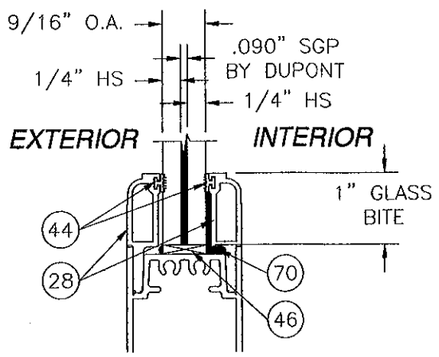

GLAZING OPTION A
LARGE MISSILE IMPACT REINFORCED & NON-REINFORCED UNITS

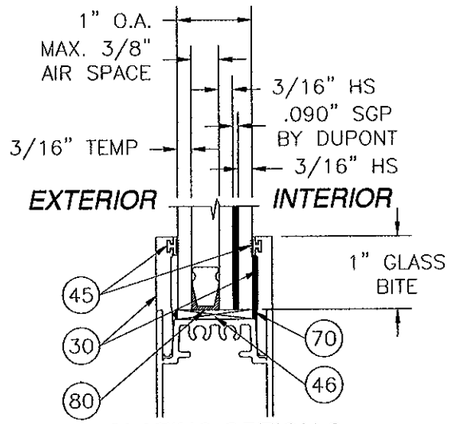

GLAZING OPTION C
LARGE MISSILE IMPACT REINFORCED & NON-REINFORCED UNITS

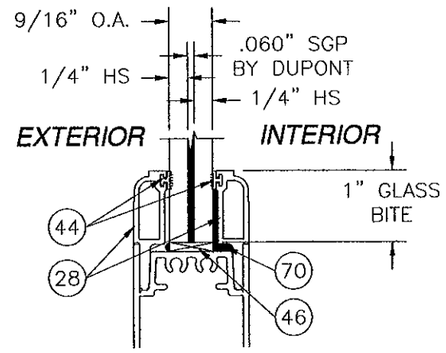

GLAZING OPTION E
LARGE MISSILE IMPACT NON-REINFORCED UNITS ONLY

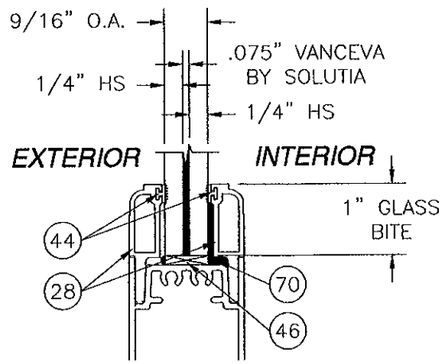

GLAZING OPTION B
LARGE MISSILE IMPACT REINFORCED & NON-REINFORCED UNITS

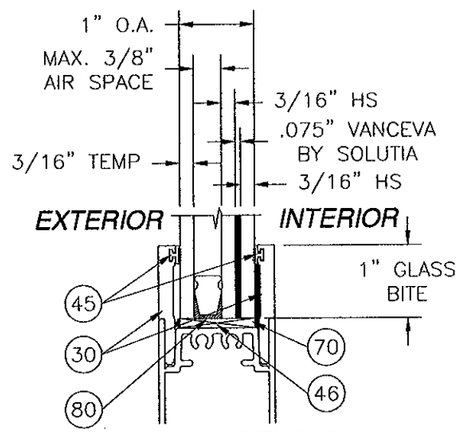

GLAZING OPTION D
LARGE MISSILE IMPACT REINFORCED & NON-REINFORCED UNITS

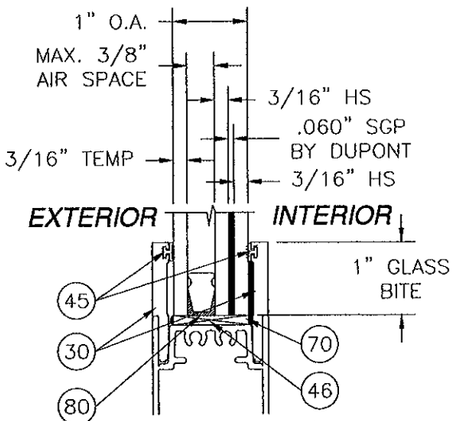

GLAZING OPTION F
LARGE MISSILE IMPACT NON-REINFORCED UNITS ONLY

Approved as noted
Florida Building Code
Date NOV 03, 2011
NOA# 11-0209.01
Miami Dade Product Control

WinDoor INCORPORATED
7500 AMSTERDAM DRIVE
ORLANDO, FL 32832
Phone: 407.481.8400
Fax: 407.481.0505
www.windoorinc.com

8100 SERIES ALUMINUM 90° & 135° CORNER SGD
4'0 x 12'0 AND 5'0 x 10'0 PANELS – LMI
BILL OF MATERIALS AND GLAZING OPTIONS

DRAWN:	DWG NO.	REV
TJH	08-01172	A
SCALE NTS	DATE 01/20/11	SHEET 17 OF 30

Luis R. Lomas P.E.
Florida No. 62514
06/03/11

PARTS LIST

NO.	PART NUMBER	DESCRIPTION	MANUFACTURER	MATERIAL
41	FH-02642	6000 BUTT STILE REINFORCING BAR	KEYMARK	ALUMINUM 6005-T5
42	FH-05479	90° & 135° CORNER STILE REINFOR.	KEYMARK	ALUMINUM 6063-T5
43	FS-04747	BUMPER JAMB INSERT	KEYMARK	ALUMINUM 6063-T6
44	TP983	9/16" GLAZING VINYL		VINYL
45	TP1051	1" GLAZING VINYL		VINYL
46	TP990	SETTING BLOCK		NEOPRENE 80DURO
47	#1988-9000	TANDEM ROLLER		
48	7500 A04	SIGNATURE HANDLE SET		
49		SIGNATURE DUMMY HANDLE SET		
50	2468	DUAL POINT MORTISE LOCK & KEEPER		
51	TP876	INTERLOCK BUMPER		RUBBER
52	NPG	PANEL GUIDE		NYLON
53	NRAHP	PANEL ADJUST. HOLE PLUG		NYLON
54	W332417K0000	FINSEAL .187 x .350		
55	W231417K0000	FINSEAL .187 x .140		
56	W332217K0000	FINSEAL .187 x .220		
57	W131317K0000	FINSEAL .187 x .130		
58	W333517K0000	FINSEAL .187 x .680		
59	P7569AM	DUST PAD 1.244" x .5" x 2.34"		
60	131018	#8 x 3/8" PH TYPE B		18-8 STAINLESS
61	131002	#8 x 1" PFH THREAD CUTTING		18-8 STAINLESS
62	131009	#10 x 3/4" FH TEK SCREW		18-8 STAINLESS
63	131004	#10 x 1 1/4" SQ. DRIVE TYPE F		410 STAINLESS
64	131020	#7 x 5/8 PH TYPE A		410 STAINLESS
65	131018	#10 x 2 1/2" TYPE F		18-8 STAINLESS
66	131010	#10 x 1/2" SCREW		18-8 STAINLESS
67	131011	#8 x 2" FH TEK SCREW		410 STAINLESS
68	131022	#8 x 3/4" PH TEK SCREW		410 STAINLESS
69	LCS068-N5	SILL GATE SNAP IN		NYLON
70	SIKAFAST 552	GLAZING COMPOUND	SIKA	SILANE POLYMER
71	715449	LOCK OPERATING GEAR (CORNER)	SIEGENIA	
72	896624	LOCK LINKAGE (CORNER)	SIEGENIA	
73	81H-01	KEEPERS (CORNER)	SELJAN	
74	FG0015011	SEALANT		SILICONE
75	FS-04766	TALL BOTTOM RAIL	KEYMARK	ALUMINUM 6063-T6
76	131055	#8 x 1/2" PFH TEK SCREW		STAILESS STEEL
77	FH-05811	135° CORNER STILE	KEYMARK	ALUMINUM 6063-T6
78	FS-05821	135° CORNER CLIP	KEYMARK	ALUMINUM 6063-T6
79		#10 x 3/4" PH TEK SCREW		18-8 STAINLESS
80	1056	IGU SPACER	HELIMA	ALUMINUM AW3000

PARTS LIST CONTINUED FROM SHEET 17

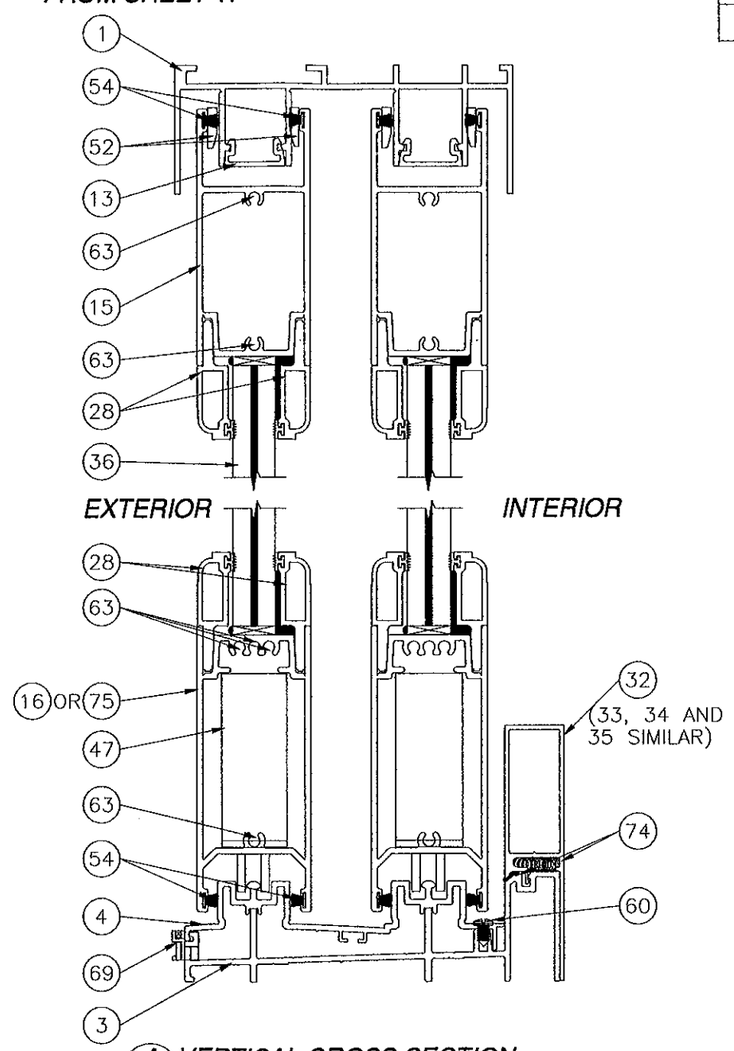

A 18 *VERTICAL CROSS SECTION*
2 TRACK FRAME SYSTEM WITH 3 1/2" SILL RISER SHOWN, ALL SILL RISERS MAY BE USED (SEE DESIGN PRESSURE CHARTS SHEET 13)

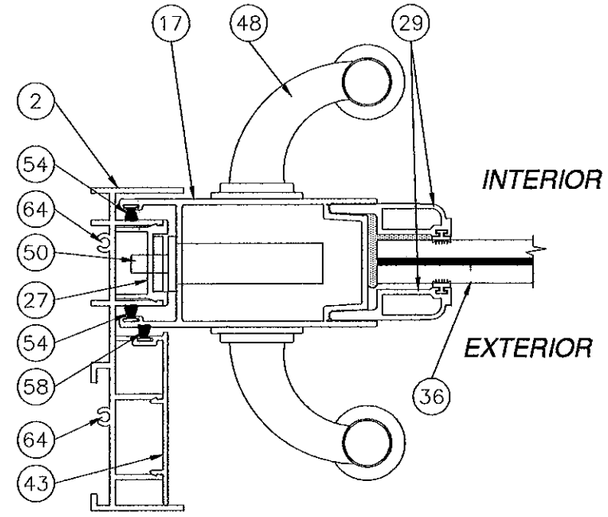

B 18 *HORIZONTAL CROSS SECTION*
LOCK STILE TO 2 TRACK FRAME JAMB

REVISIONS			
REV	DESCRIPTION	DATE	APPROVED
A	PER DADE LETTER DATED MAY 06, 2010	05/12/10	R.L.

Approved as complying with the Florida Building Code
Date Nov 03, 2011
NOA# 11-0208.01
Miami Dade Product Control
By Ishaq I. Chanda

WinDoor INCORPORATED
7500 AMSTERDAM DRIVE
ORLANDO, FL 32832
Phone: 407.481.8400
Fax: 407.481.0505
www.windoorinc.com

8100 SERIES ALUMINUM 90° & 135° CORNER SGD
4'0 x 12'0 AND 5'0 x 10'0 PANELS - LMI
BILL OF MATERIALS AND CROSS SECTIONS

DRAWN:	DWG NO.	REV
TJH	08-01172	A
SCALE NTS	DATE 01/20/11	SHEET 18 OF 30

Luis R. Lomas
06/03/11
Luis R. Lomas P.E.
Florida No. 62514

REVISIONS			
REV	DESCRIPTION	DATE	APPROVED
A	PER DADE LETTER DATED MARCH 21, 2011	03/24/11	R.L.

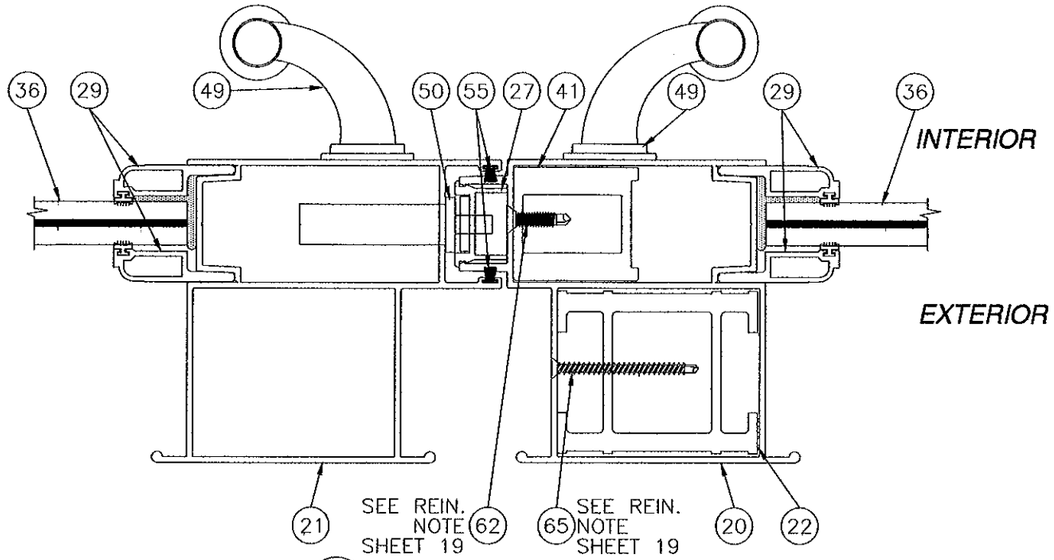

D/19 HORIZONTAL CROSS SECTION
MALE BUTT STILE TO REINFORCED FEMALE BUTT STILE

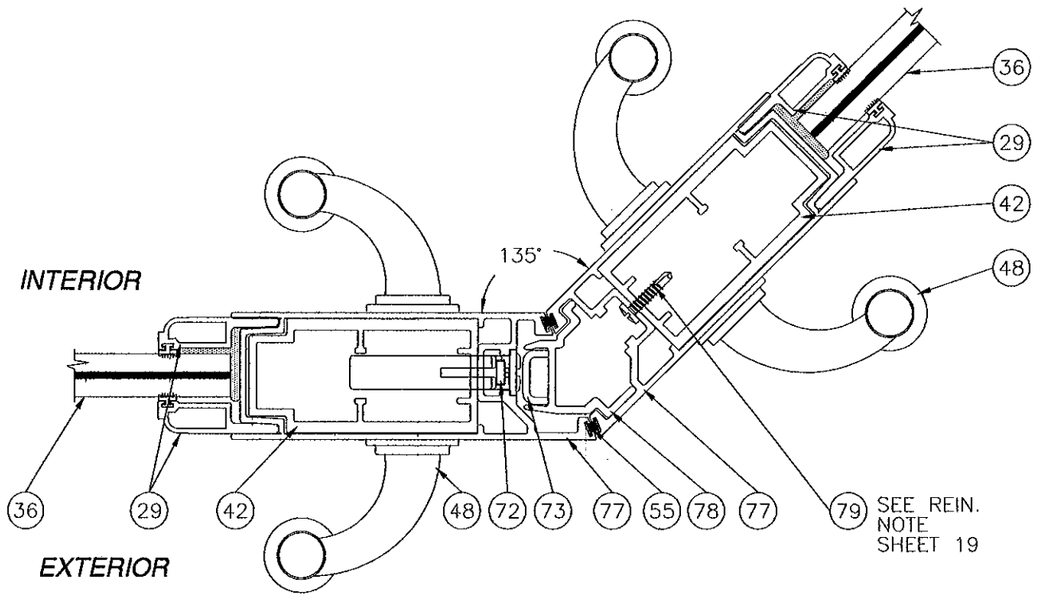

J/19 HORIZONTAL CROSS SECTION
REINFORCED 135° CORNER STILE

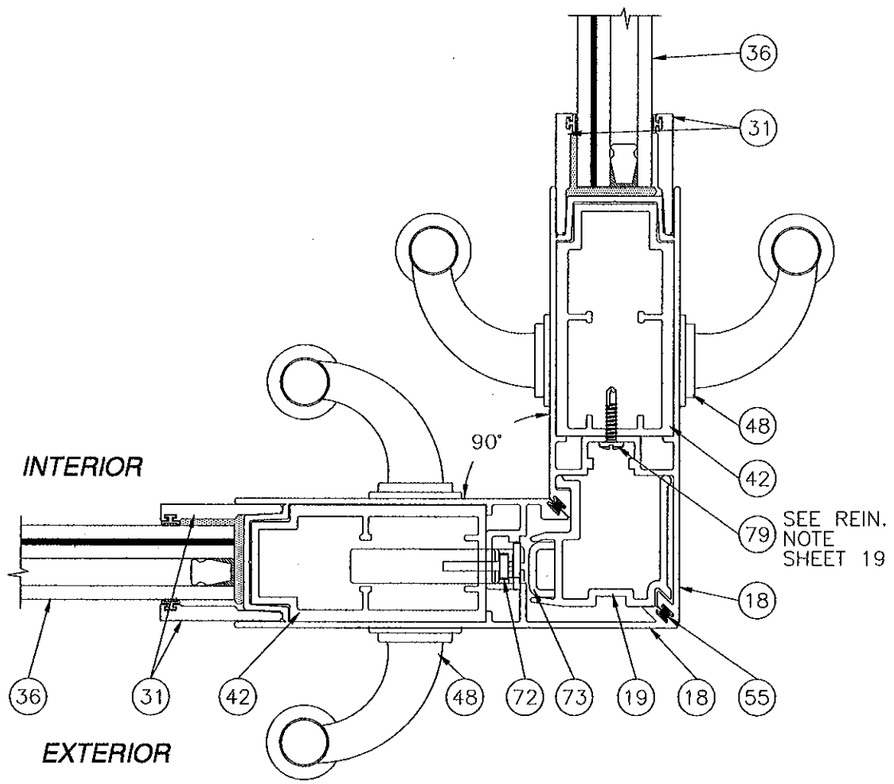

E/19 HORIZONTAL CROSS SECTION
REINFORCED 90° CORNER STILE

Approved as complying with the Florida Building Code
Date NOV 03 2011
NOA# 11-0208.01
Miami-Dade Product Control
By [signature]

REINFORCING BAR NOTE:
ITEM #40, (INTERLOCK REINFORCING BAR) IS SECURED TO INTERLOCK WITH ITEM #62 SEE DETAILS C/22 AND F/22.
ITEM #22, (FEMALE BUTT STILE REINFORCING BAR) IS SECURED TO FEMALE BUTT STILE OFFSET WITH ITEM #65 SEE DETAIL D/19.
ITEM #41, (6000 BUTT STILE REINFORCING BAR) IS SECURED TO FEMALE BUTT STILE OFFSET WITH ITEM #62 SEE DETAIL D/19.
ITEM #42 (CORNER STILE REINFORCING BAR) IS SECURED TO CORNER STILE WITH ITEM #79 SEE DETAIL E/19.
ALL SCREWS ARE SPACED 6" FROM TOP AND BOTTOM OF STILES AND ONE AT MIDSPAN.

WinDoor INCORPORATED
7500 AMSTERDAM DRIVE
ORLANDO, FL 32832
Phone: 407.481.8400
Fax: 407.481.0505
www.windoorinc.com

8100 SERIES ALUMINUM 90° & 135° CORNER SGD
4'0 x 12'0 AND 5'0 x 10'0 PANELS – LMI
CROSS SECTIONS

DRAWN:	DWG NO.	REV
TJH	08-01172	A
SCALE NTS	DATE 01/20/11	SHEET 19 OF 30

06/03/11
Luis R. Lomas P.E.
Florida No. 62514

REVISIONS			
REV	DESCRIPTION	DATE	APPROVED
A	PER DADE LETTER DATED MARCH 21, 2011	03/24/11	R.L.

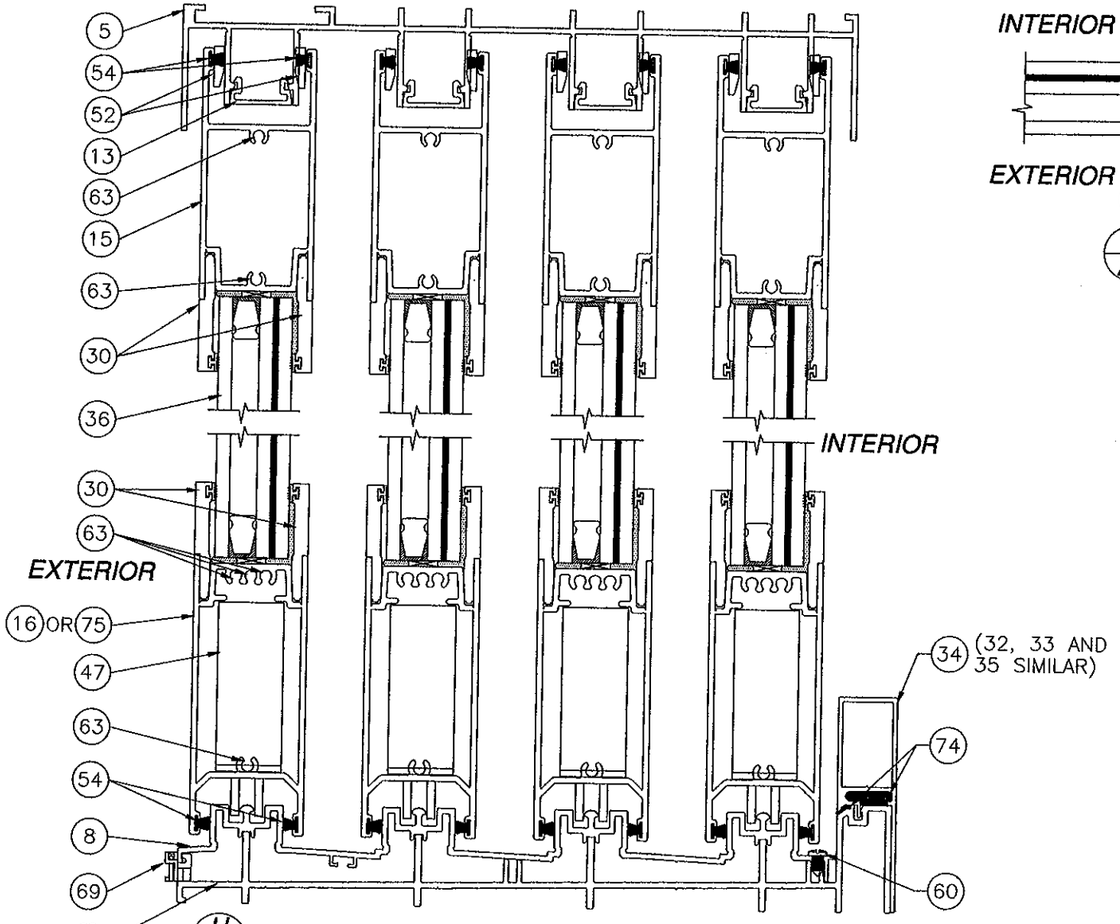

H/20 VERTICAL CROSS SECTION
4 TRACK FRAME SYSTEM WITH 3" SILL RISER SHOWN, ALL SILL RISERS MAYBE USED (SEE DESIGN PRESSURE CHARTS SHEET 13)

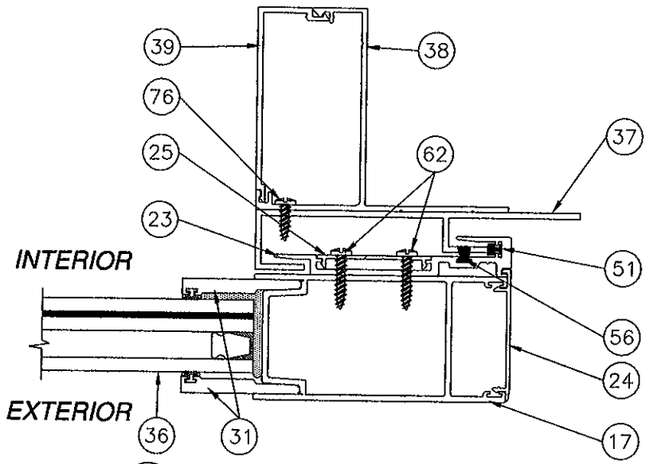

G/20 HORIZONTAL CROSS SECTION
INTERLOCK TO HOOK STRIP

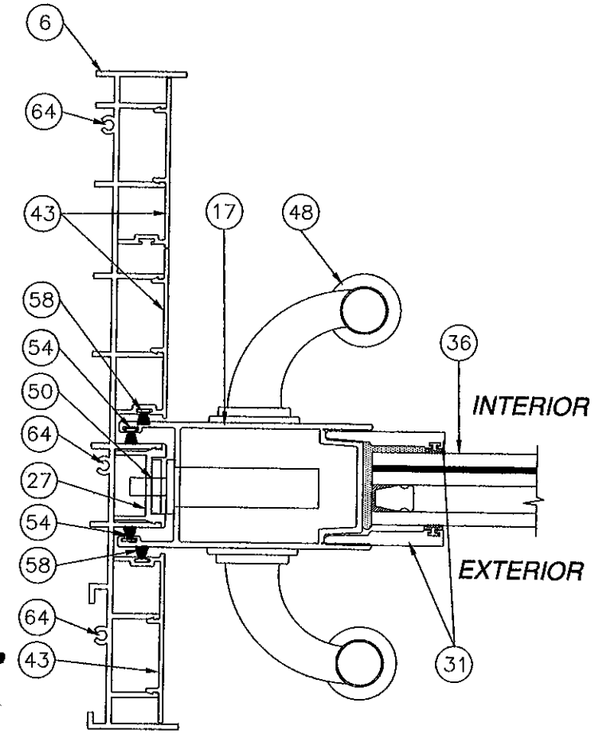

I/20 HORIZONTAL CROSS SECTION
LOCK STILE TO 4 TRACK FRAME JAMB

Approved as complying with the Florida Building Code
Date Nov 03, 2011
NOA# 11-0208.01
Miami-Dade Product Control
By Ishaq I. Chanda

WinDoor INCORPORATED
7500 AMSTERDAM DRIVE
ORLANDO, FL 32832
Phone: 407.481.8400
Fax: 407.481.0505
www.windoorinc.com

8100 SERIES ALUMINUM 90° & 135° CORNER SGD
4'0 x 12'0 AND 5'0 x 10'0 PANELS – LMI
CROSS SECTIONS

DRAWN:	DWG NO.	REV
TJH	08-01172	A
SCALE: NTS	DATE: 01/20/11	SHEET: 20 OF 30

06/03/11
Luis R. Lomas P.E.
Florida No. 62514

REVISIONS			
REV	DESCRIPTION	DATE	APPROVED
A	PER DADE LETTER DATED MARCH 21, 2011	03/24/11	R.L.

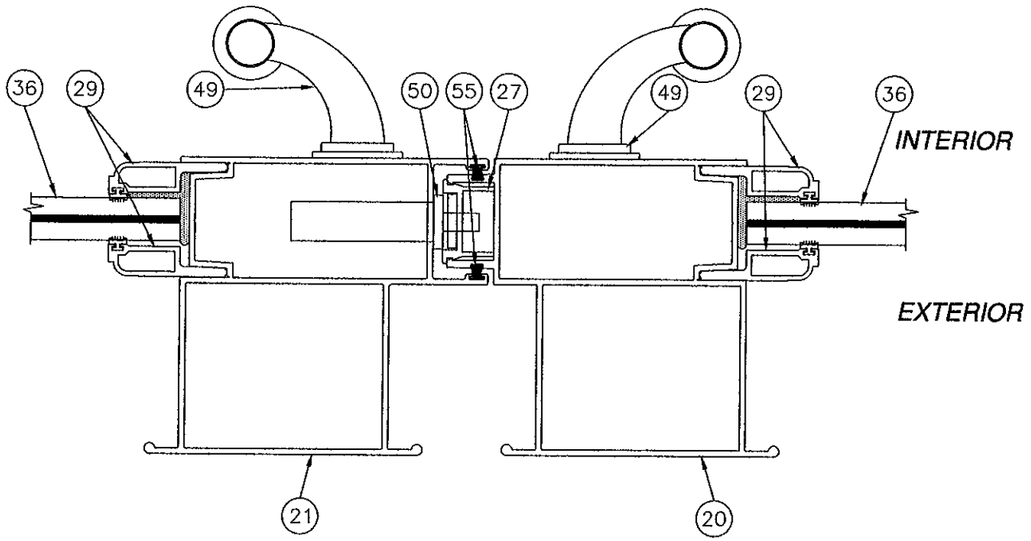

N/21 HORIZONTAL CROSS SECTION
MALE BUTT STILE TO NON-REINFORCED FEMALE BUTT STILE

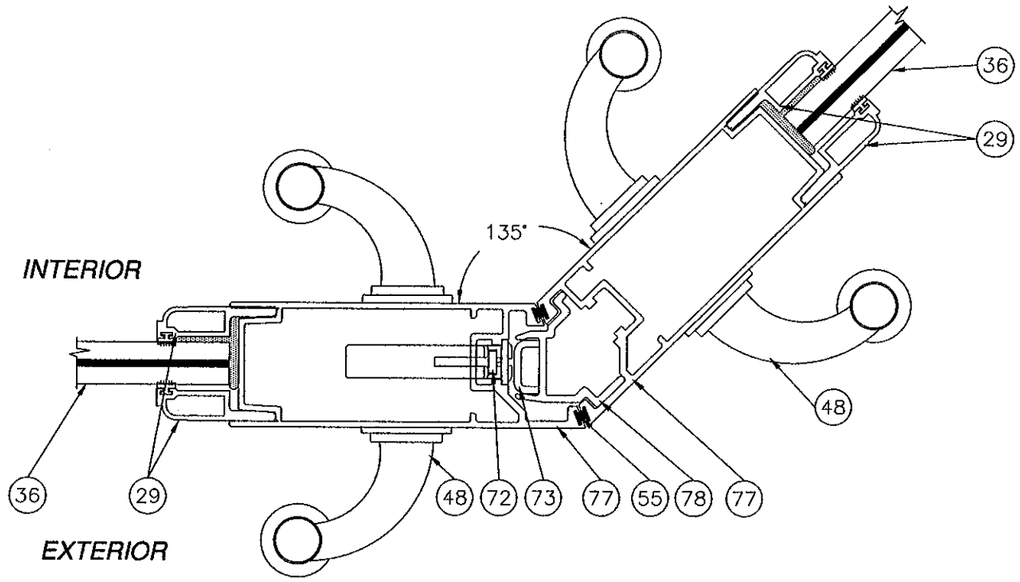

O/21 HORIZONTAL CROSS SECTION
NON-REINFORCED 135° CORNER STILE

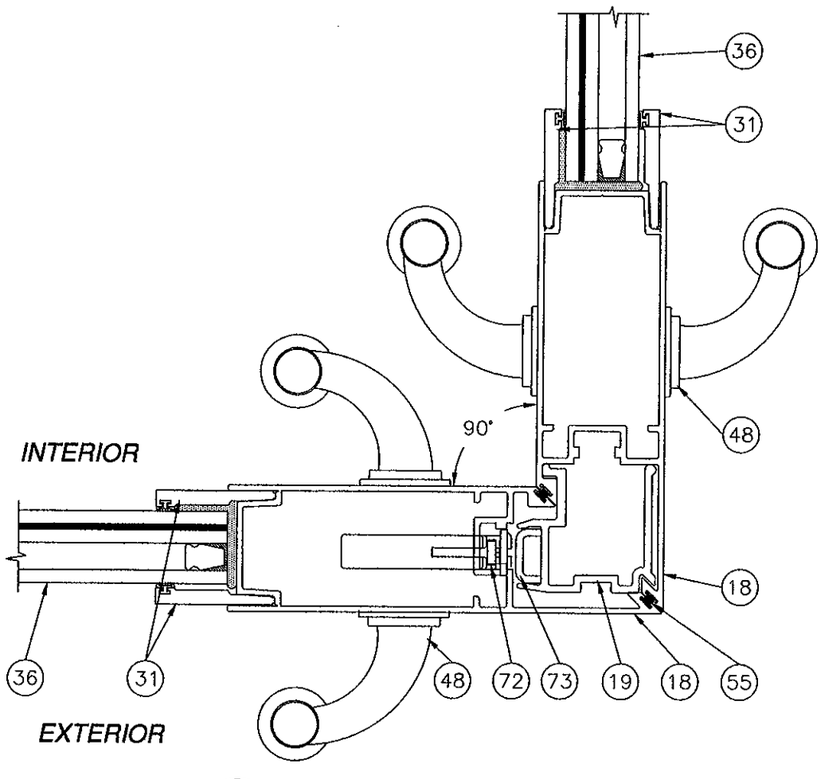

P/21 HORIZONTAL CROSS SECTION
NON-REINFORCED 90° CORNER STILE

Approved as complying with the Florida Building Code
Date Nov 03, 2011
NOA# 11-0208.01
Miami-Dade Product Control
By Ishaq I. Chanda

WinDoor INCORPORATED
7500 AMSTERDAM DRIVE
ORLANDO, FL 32832
Phone: 407.481.8400
Fax: 407.481.0505
www.windoorinc.com

8100 SERIES ALUMINUM 90° & 135° CORNER SGD
4'0 x 12'0 AND 5'0 x 10'0 PANELS – LMI
CROSS SECTIONS

DRAWN:	DWG NO.	REV
TJH	08-01172	A
SCALE NTS	DATE 01/20/11	SHEET 21 OF 30

06/03/11
Luis R. Lomas P.E.
Florida No. 62514

REVISIONS			
REV	DESCRIPTION	DATE	APPROVED
A	PER DADE LETTER DATED MARCH 21, 2011	03/24/11	R.L.

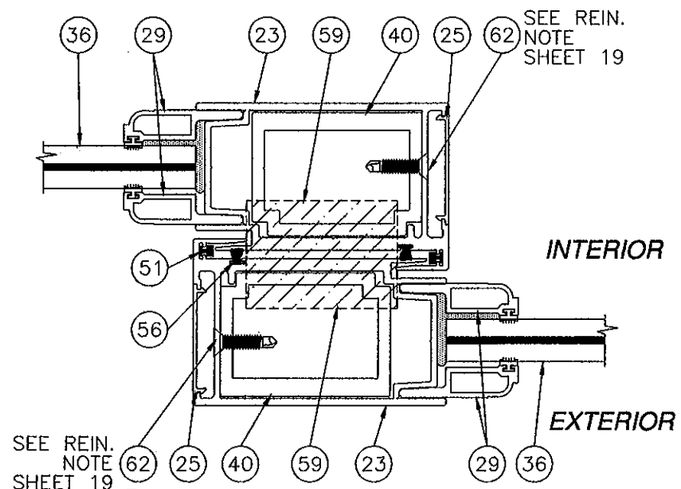

C/22 HORIZONTAL CROSS SECTION
REINFORCED INTERLOCK TO REINFORCED INTERLOCK

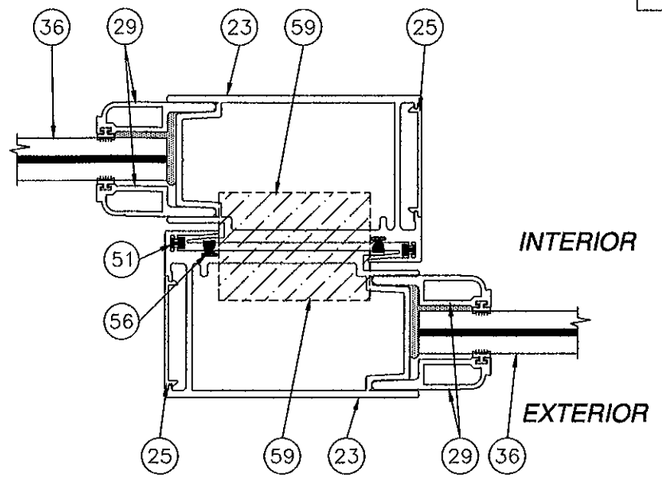

Q/22 HORIZONTAL CROSS SECTION
NON-REINFORCED INTERLOCK TO NON-REINFORCED INTERLOCK

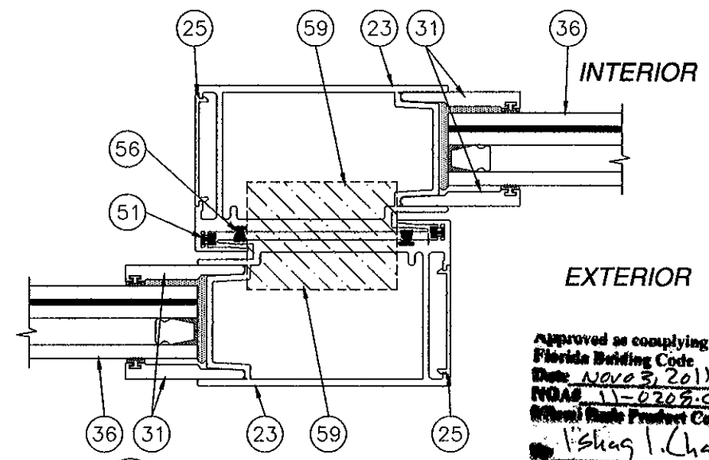

R/22 HORIZONTAL CROSS SECTION
NON-REINFORCED INTERLOCK TO NON-REINFORCED INTERLOCK

Approved as complying with the Florida Building Code
Date: Nov 03, 2011
NOAS 11-0208.01
Miami Dade Product Control
By: Ishag I. Chaude

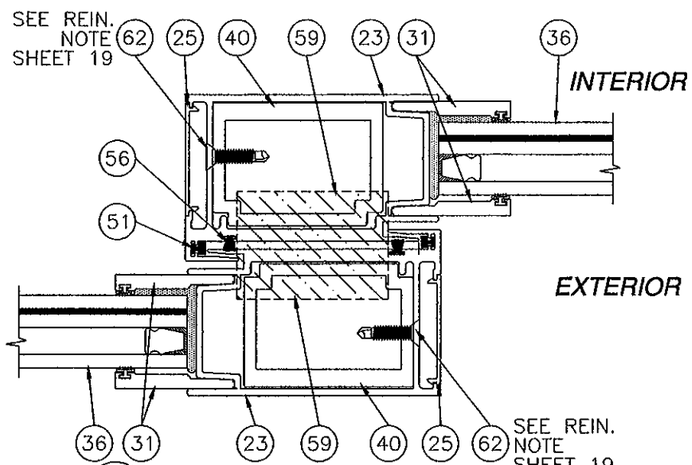

F/22 HORIZONTAL CROSS SECTION
REINFORCED INTERLOCK TO REINFORCED INTERLOCK

WinDoor INCORPORATED
7500 AMSTERDAM DRIVE
ORLANDO, FL 32832
Phone: 407.481.8400
Fax: 407.481.0505
www.windoorinc.com

8100 SERIES ALUMINUM 90° & 135° CORNER SGD
4'0 x 12'0 AND 5'0 x 10'0 PANELS – LMI
CROSS SECTIONS

DRAWN:	DWG NO.	REV
TJH	08-01172	A
SCALE NTS	DATE 01/20/11	SHEET 22 OF 30

Luis R. Lomas
06/03/11
Luis R. Lomas P.E.
Florida No. 62514

REVISIONS			
REV	DESCRIPTION	DATE	APPROVED
A	PER DADE LETTER DATED MARCH 21, 2011	03/24/11	R.L.

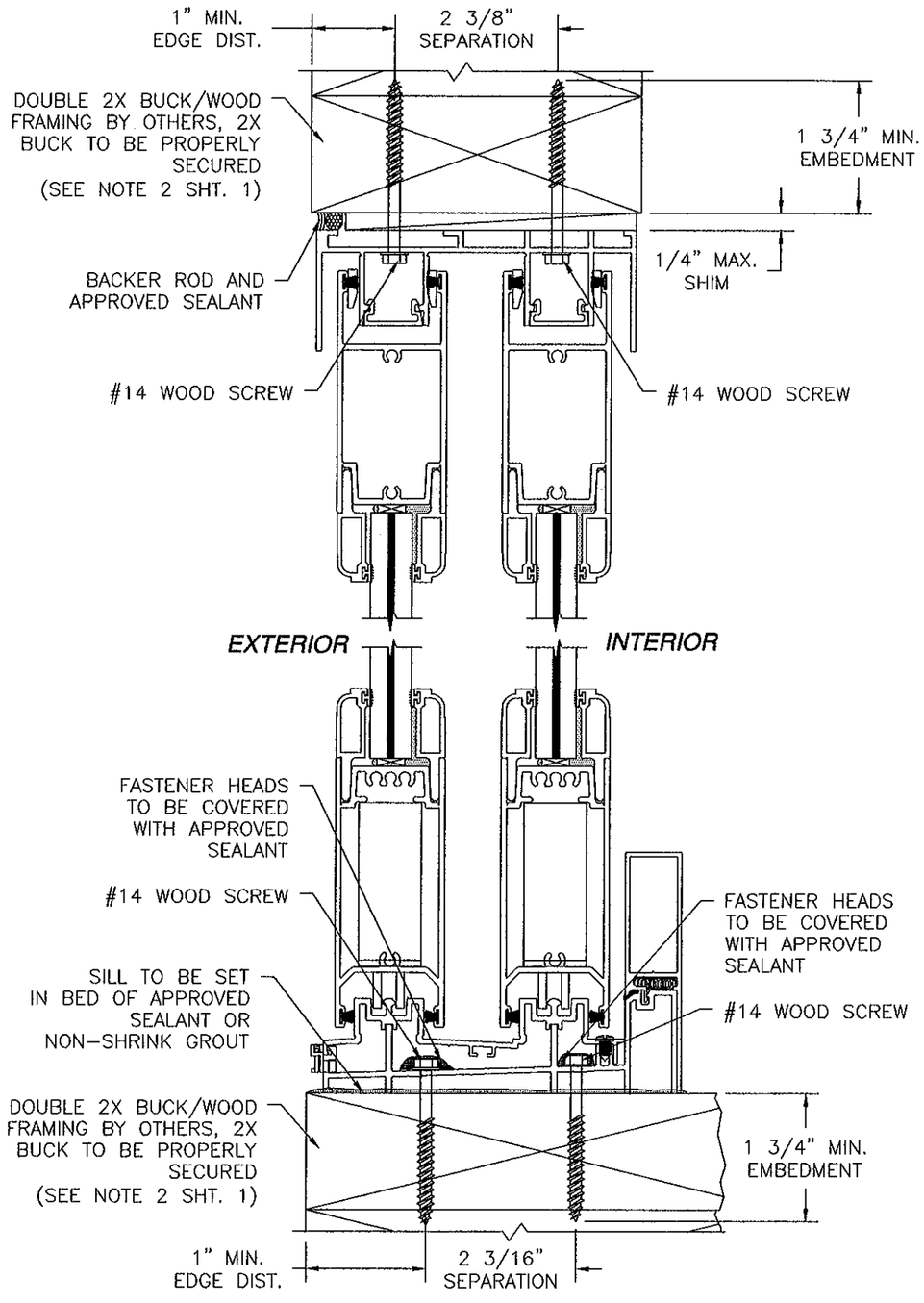

VERTICAL CROSS SECTION
2X BUCK/WOOD FRAMING INSTALLATION
2 TRACK FRAME SHOWN, 3 TRACK
AND 4 TRACK SIMILAR

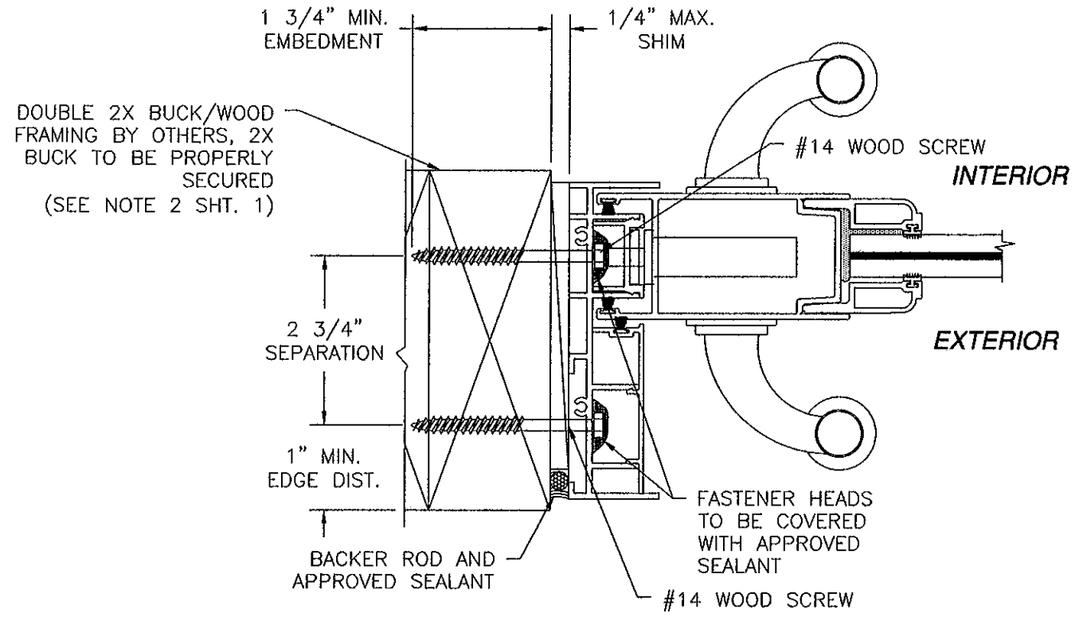

HORIZONTAL CROSS SECTION
2X BUCK/WOOD FRAMING INSTALLATION
2 TRACK FRAME SHOWN, 3 TRACK
AND 4 TRACK SIMILAR

NOTE:
2X BUCK/WOOD FRAME SUBSTRATE INSTALLATION FOR 2 TRACK SHOWN. ANCHORAGE SIMILAR FOR 3 TRACK AND 4 TRACK SYSTEMS. SEE SHEET 16 FOR O.C. ANCHOR SEPARATION.

2 TRACK WITH 3 1/2" SILL RISER SHOWN 3 TRACK & 4 TRACK ARE SIMILAR. ALL APPLICABLE SILL RISERS MAYBE USED. SEE D.P. TABLES SHEETS 13A AND 13B.

Approved as complying with the Florida Building Code
Date Nov 03, 2011
NOA# 11-0209.01
Miami-Dade Product Control
By Ishaq I. Lhunde

WinDoor INCORPORATED
7500 AMSTERDAM DRIVE
ORLANDO, FL 32832
Phone: 407.481.8400
Fax: 407.481.0505
www.windoorinc.com

8100 SERIES ALUMINUM 90° & 135° CORNER SGD
4'0 x 12'0 AND 5'0 x 10'0 PANELS – LMI
INSTALLATION DETAILS

DRAWN:	DWG NO.	REV
TJH	08-01172	A
SCALE NTS	DATE 01/20/11	SHEET 23 OF 30

06/08/11
Luis R. Lomas P.E.
Florida No. 62514

REVISIONS			
REV	DESCRIPTION	DATE	APPROVED
A	PER DADE LETTER DATED MARCH 21, 2011	03/24/11	R.L.

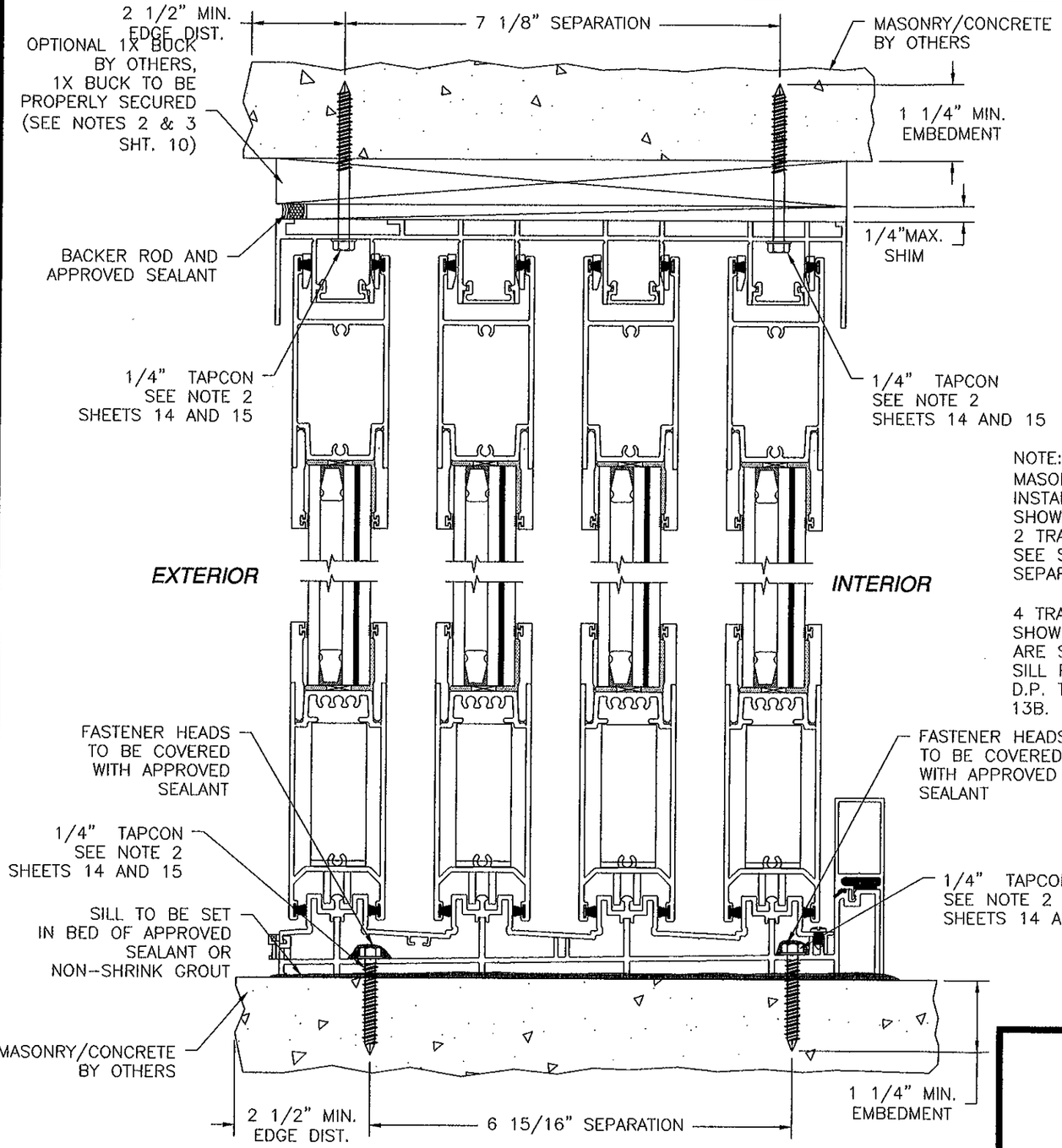

VERTICAL CROSS SECTION
MASONRY/CONCRETE INSTALLATION
4 TRACK FRAME SHOWN, 2 TRACK AND 3 TRACK SIMILAR

NOTE:
MASONRY/CONCRETE SUBSTRATE INSTALLATION FOR 4 TRACK SHOWN. ANCHORAGE SIMILAR FOR 2 TRACK AND 3 TRACK SYSTEMS. SEE SHEET 16 FOR O.C. ANCHOR SEPARATION.

4 TRACK WITH 3" SILL RISER SHOWN 2 TRACK & 3 TRACK ARE SIMILAR. ALL APPLICABLE SILL RISERS MAYBE USED. SEE D.P. TABLES SHEETS 13A AND 13B.

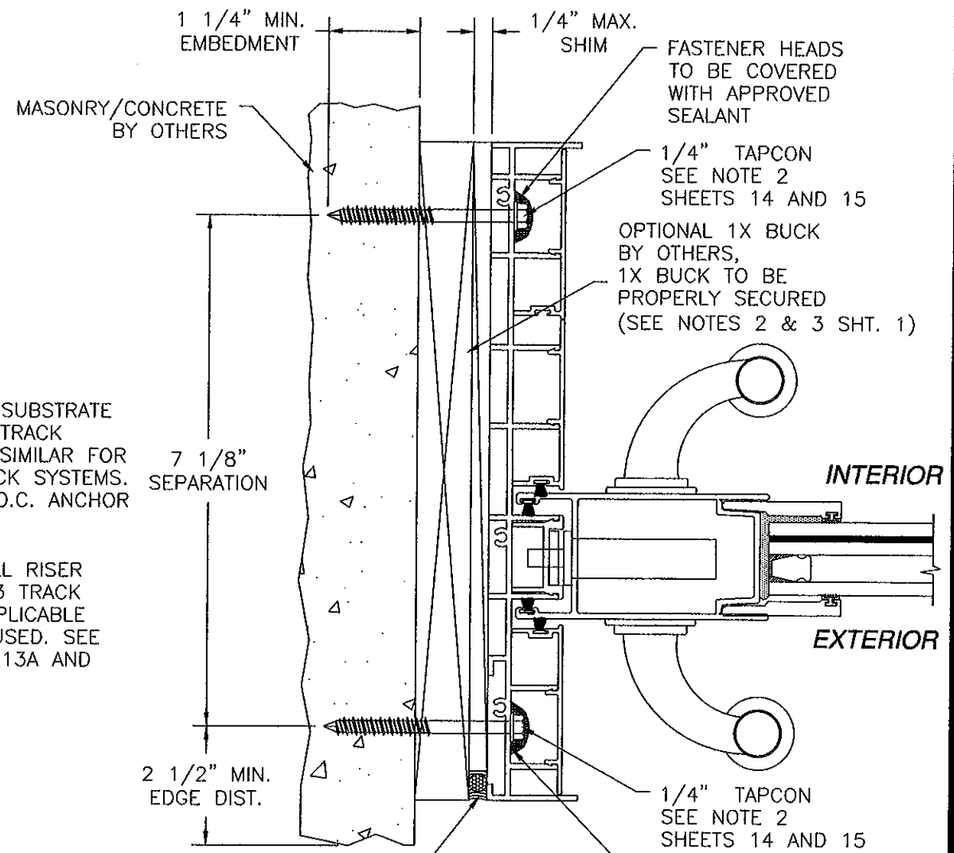

HORIZONTAL CROSS SECTION
4 TRACK FRAME SHOWN, 2 TRACK AND 3 TRACK SIMILAR

Approved as complying with the Florida Building Code
Date NOV 03, 2011
NOA# 11-0708.01
Miami-Dade Product Control
By Ishaq I. Chand

WinDoor INCORPORATED
7500 AMSTERDAM DRIVE
ORLANDO, FL 32832
Phone: 407.481.8400
Fax: 407.481.0505
www.windoorinc.com

8100 SERIES ALUMINUM 90° & 135° CORNER SGD
4'0 x 12'0 AND 5'0 x 10'0 PANELS – LMI
INSTALLATION DETAILS

DRAWN:	DWG NO.	REV
TJH	08-01172	A
SCALE NTS	DATE 01/20/11	SHEET 24 OF 30

06/03/11
Luis R. Lomas P.E.
Florida No. 62514

REVISIONS			
REV	DESCRIPTION	DATE	APPROVED
A	PER DADE LETTER DATED MARCH 21, 2011	03/24/11	R.L.

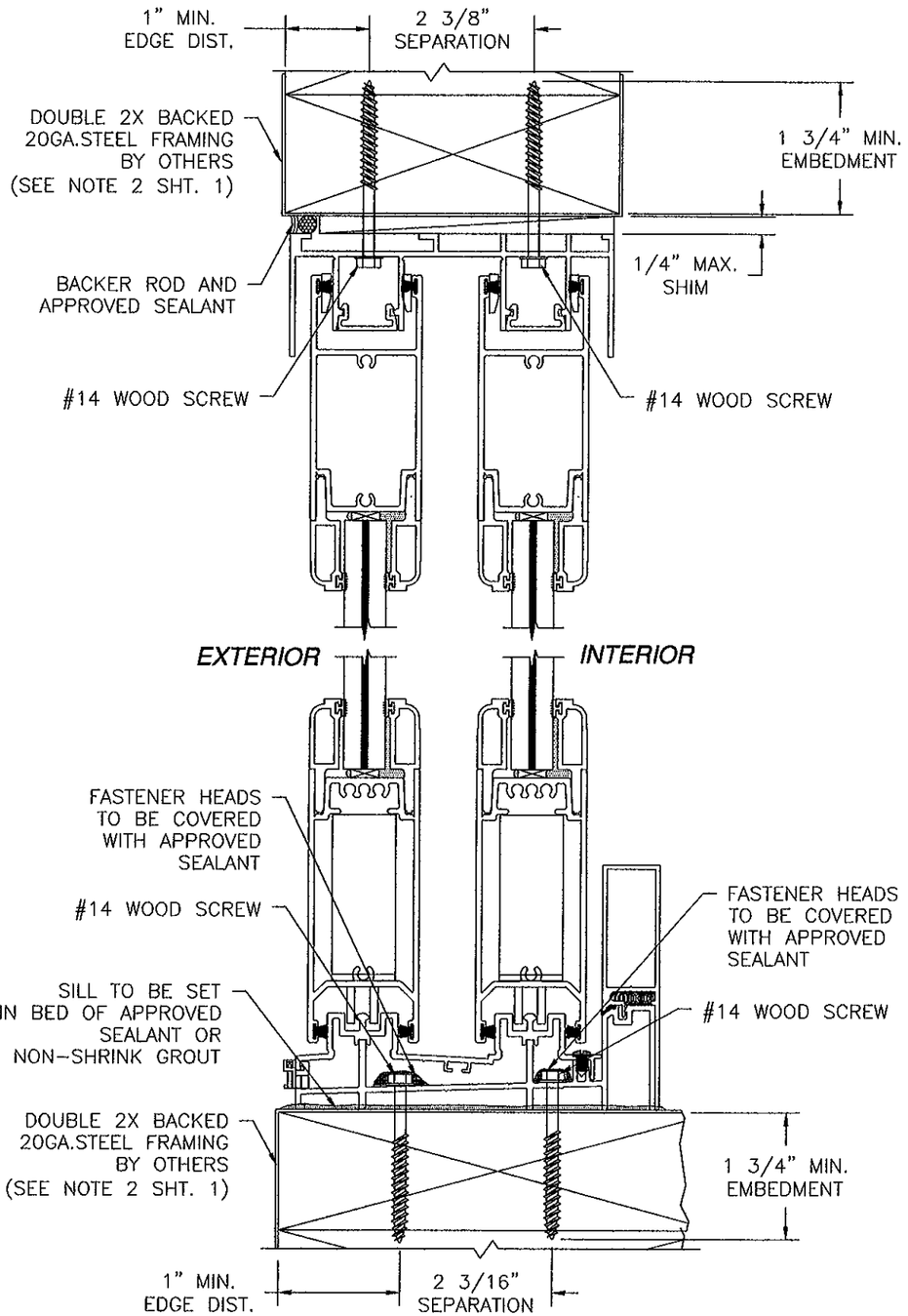

VERTICAL CROSS SECTION
2X BACKED STEEL FRAMING INSTALLATION
2 TRACK FRAME SHOWN, 3 TRACK
AND 4 TRACK SIMILAR

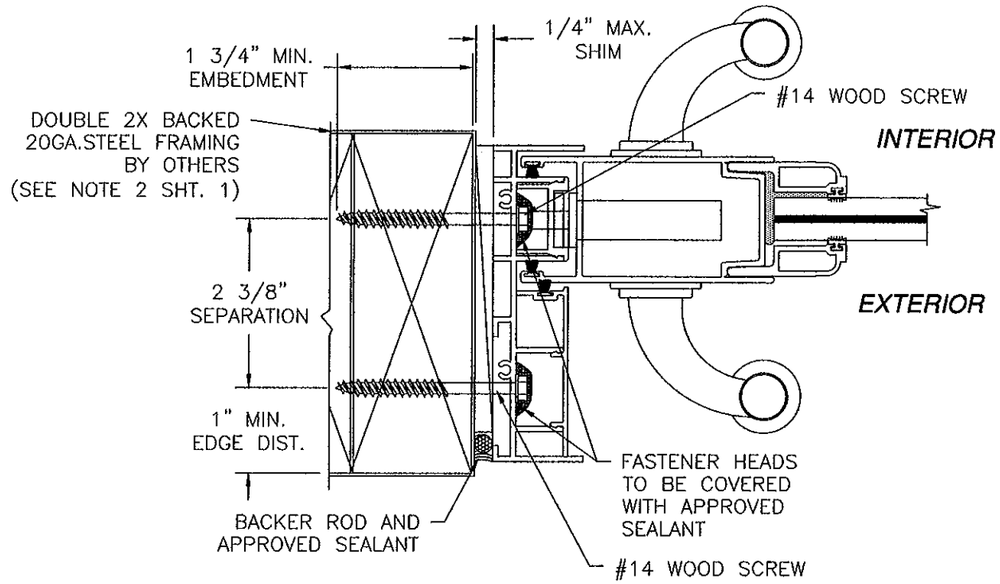

HORIZONTAL CROSS SECTION
2X BACKED STEEL FRAMING INSTALLATION
2 TRACK FRAME SHOWN, 3 TRACK
AND 4 TRACK SIMILAR

Approved as complying with the Florida Building Code
Date NOV 03, 2011
NOA# 11-0208.01
Miami-Dade Product Control
By Ishaq I. Chanda

NOTE:
WOOD BACKED 20GA. STEEL STUD SUBSTRATE INSTALLATION FOR 2 TRACK SHOWN. ANCHORAGE SIMILAR FOR 3 TRACK AND 4 TRACK SYSTEMS. SEE SHEET 16 FOR O.C. ANCHOR SEPARATION.

2 TRACK WITH 3 1/2" SILL RISER SHOWN 3 TRACK & 4 TRACK ARE SIMILAR. ALL APPLICABLE SILL RISERS MAYBE USED. SEE D.P. TABLES SHEETS 13A AND 13B.

WinDoor INCORPORATED
7500 AMSTERDAM DRIVE
ORLANDO, FL 32832
Phone: 407.481.8400
Fax: 407.481.0505
www.windoorinc.com

8100 SERIES ALUMINUM 90° & 135° CORNER SGD
4'0 x 12'0 AND 5'0 x 10'0 PANELS – LMI
INSTALLATION DETAILS

DRAWN:	DWG NO.	REV
TJH	08-01172	A
SCALE NTS	DATE 01/20/11	SHEET 25 OF 30

06/03/11
Luis R. Lomas P.E.
Florida No. 62514

REVISIONS			
REV	DESCRIPTION	DATE	APPROVED
A	PER DADE LETTER DATED MARCH 21, 2011	03/24/11	R.L.

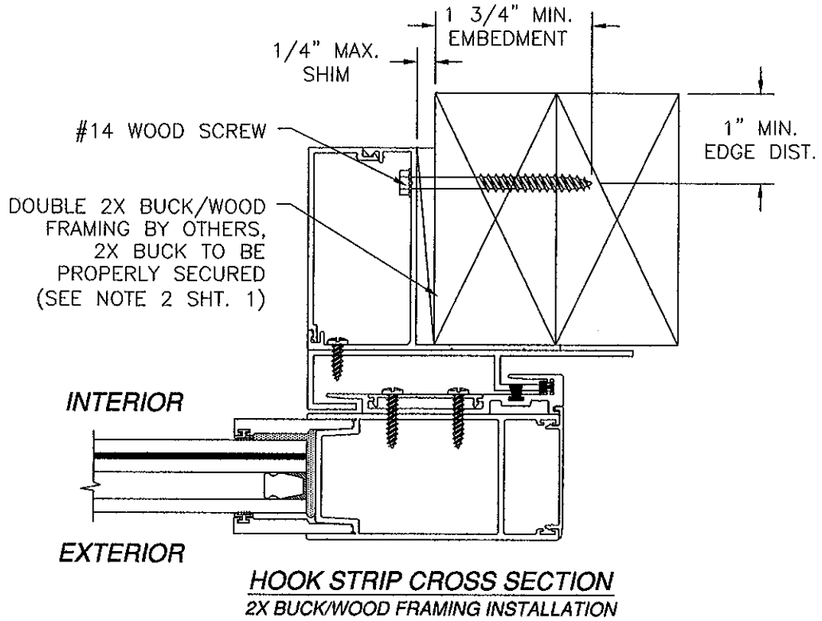

HOOK STRIP CROSS SECTION
2X BUCK/WOOD FRAMING INSTALLATION

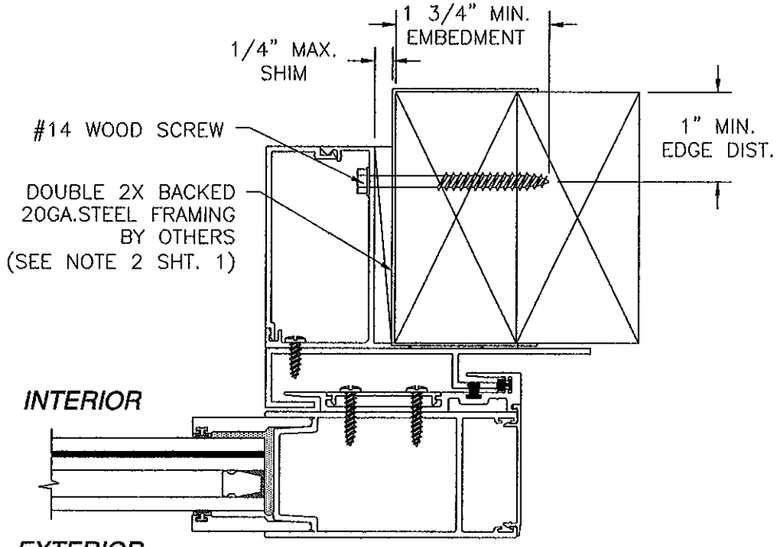

HOOK STRIP CROSS SECTION
2X BACKED STEEL FRAMING INSTALLATION

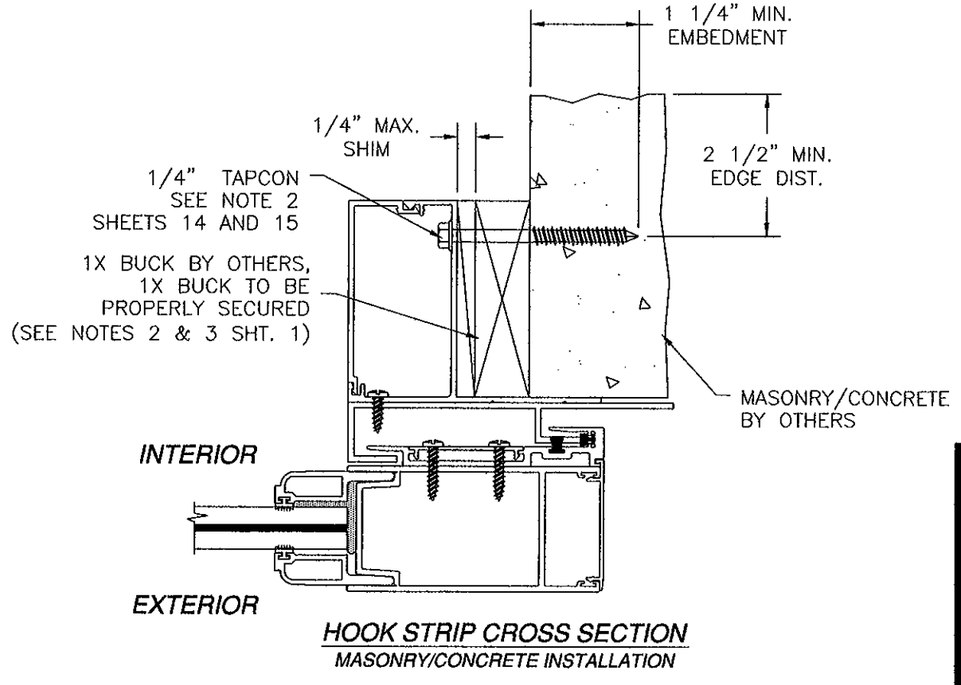

HOOK STRIP CROSS SECTION
MASONRY/CONCRETE INSTALLATION

Approved as complying with the Florida Building Code
Date: Nov 03, 2011
NOA# 11-0208.01
Miami-Dade Product Control
By: Ishaq I. Chanda

WinDoor INCORPORATED
7500 AMSTERDAM DRIVE
ORLANDO, FL 32832
Phone: 407.481.8400
Fax: 407.481.0505
www.windoorinc.com

8100 SERIES ALUMINUM 90° & 135° CORNER SGD
4'0 x 12'0 AND 5'0 x 10'0 PANELS – LMI
INSTALLATION DETAILS

DRAWN:	DWG NO.	REV
TJH	08-01172	A
SCALE NTS	DATE 01/20/11	SHEET 26 OF 30

Luis R. Lomas P.E.
Florida No. 62514
06/03/11

REVISIONS			
REV	DESCRIPTION	DATE	APPROVED
A	PER DADE LETTER DATED MARCH 21, 2011	03/24/11	R.L.

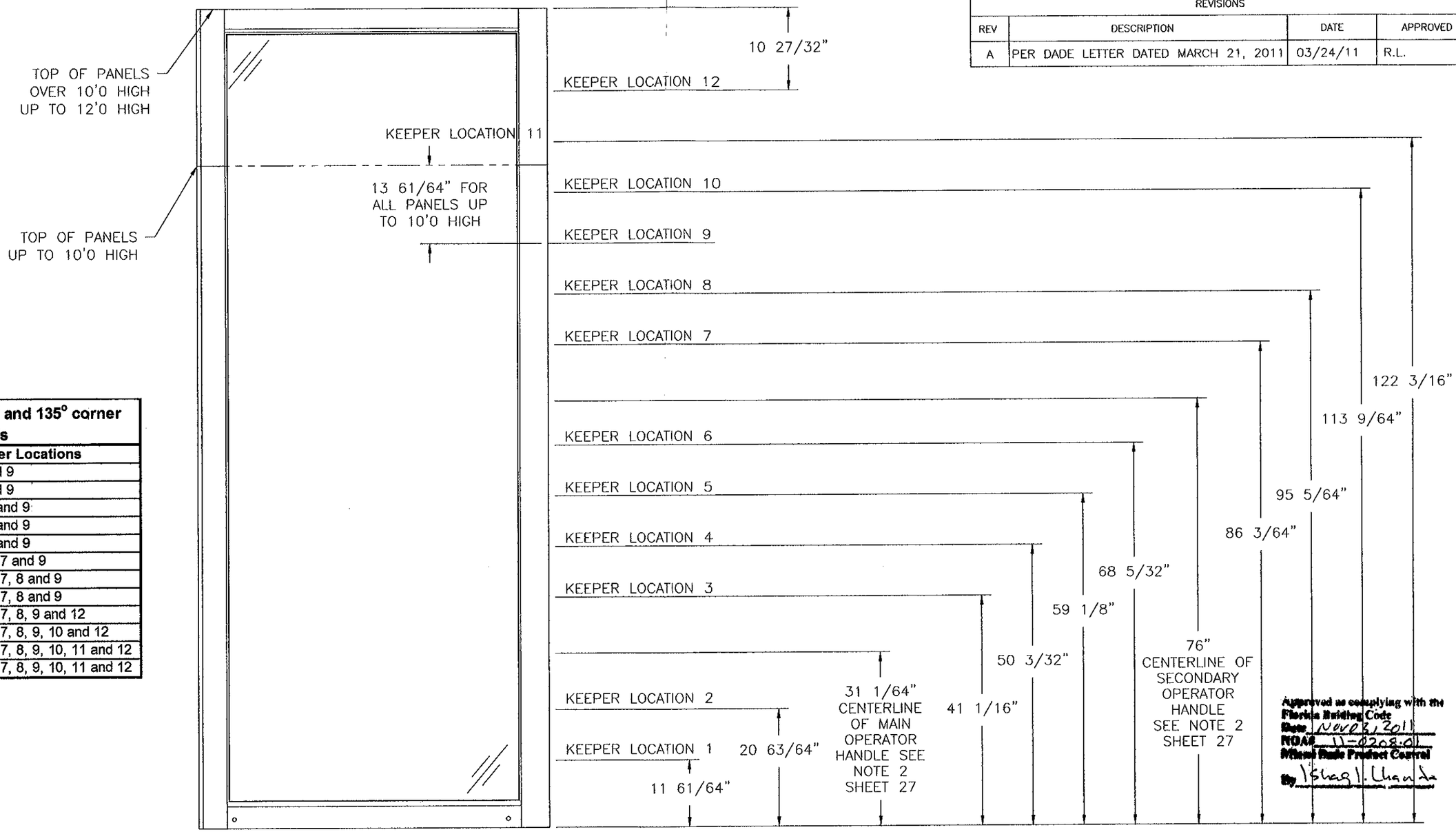

Keeper locations 90° and 135° corner panels

Height (in)	Keeper Locations
80	1, 2, 3, 4, 5 and 9
84	1, 2, 3, 4, 5 and 9
90	1, 2, 3, 4, 5, 6 and 9
96	1, 2, 3, 4, 5, 6 and 9
102	1, 2, 3, 4, 5, 6 and 9
108	1, 2, 3, 4, 5, 6, 7 and 9
114	1, 2, 3, 4, 5, 6, 7, 8 and 9
120	1, 2, 3, 4, 5, 6, 7, 8 and 9
126	1, 2, 3, 4, 5, 6, 7, 8, 9 and 12
132	1, 2, 3, 4, 5, 6, 7, 8, 9, 10 and 12
138	1, 2, 3, 4, 5, 6, 7, 8, 9, 10, 11 and 12
144	1, 2, 3, 4, 5, 6, 7, 8, 9, 10, 11 and 12

PANEL LOCKING HARDWARE LOCATIONS AT 90° AND 135° CORNERS

Approved as complying with the Florida Building Code
Date Nov 03, 2011
NOA# 11-0208.01
Miami-Dade Product Control
By Shaq I. Chanda

LOCKING HARDWARE NOTES:
1) LAYOUT IS FOR ALL PANELS UP TO 12'0 HIGH.
2) MAIN OPERATOR HANDLE OPERATES KEEPER LOCATIONS 1 – 6. SECONDARY OPERATOR HANDLE OPERATES KEEPER LOCATIONS 7 –12.

WinDoor INCORPORATED
7500 AMSTERDAM DRIVE
ORLANDO, FL 32832
Phone: 407.481.8400
Fax: 407.481.0505
www.windoorinc.com

8100 SERIES ALUMINUM 90° & 135° CORNER SGD
4'0 x 12'0 AND 5'0 x 10'0 PANELS – LMI
LOCKING HARDWARE LOCATIONS

DRAWN:	DWG NO.	REV
TJH	08-01172	A
SCALE NTS	DATE 01/20/11	SHEET 27 OF 30

Luis R. Lomas P.E.
Florida No. 62514
06/03/11

REVISIONS			
REV	DESCRIPTION	DATE	APPROVED
A	PER DADE LETTER DATED MARCH 21, 2011	03/24/11	R.L.

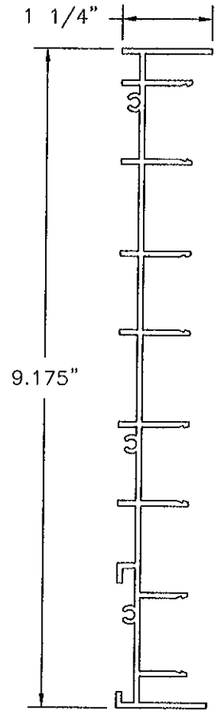

6 **4 TRACK FRAME JAMB**
ALUMINUM 6063-T6 .075" THICK

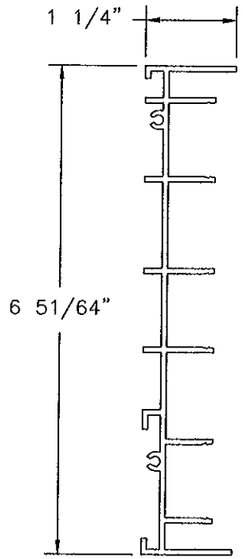

10 **3 TRACK FRAME JAMB**
ALUMINUM 6063-T6 .075" THICK

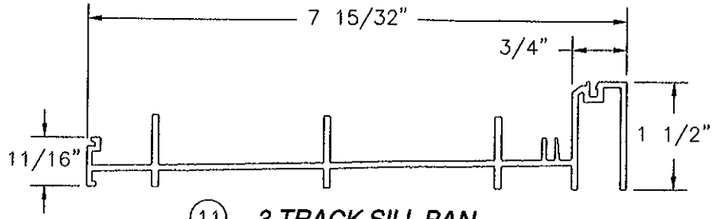

11 **3 TRACK SILL PAN**
ALUMINUM 6063-T6 .085" THICK

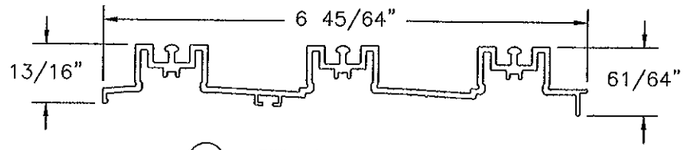

12 **3 TRACK SILL INSERT**
ALUMINUM 6063-T6 .075" THICK

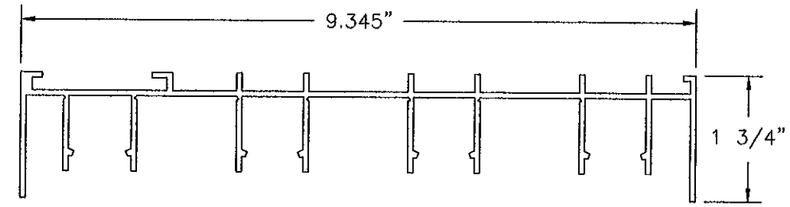

5 **4 TRACK FRAME HEAD**
ALUMINUM 6063-T6 .075" THICK

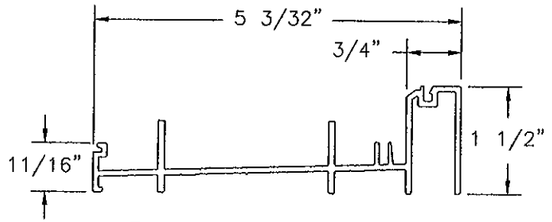

3 **2 TRACK SILL PAN**
ALUMINUM 6063-T6 .075" THICK

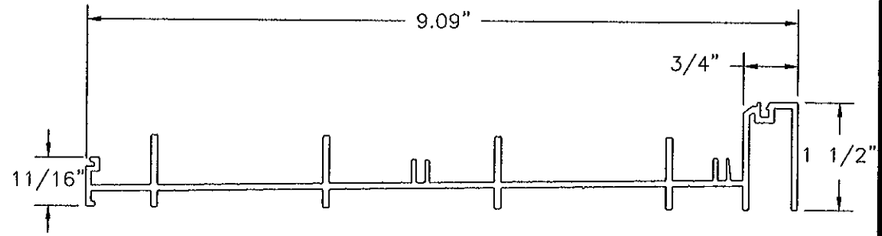

7 **4 TRACK SILL PAN**
ALUMINUM 6063-T6 .085" THICK

Approved as complying with the Florida Building Code
Date NOV 03, 2011
NOA# 11-0208.01
Miami-Dade Product Control
By Ishas I. Chanda

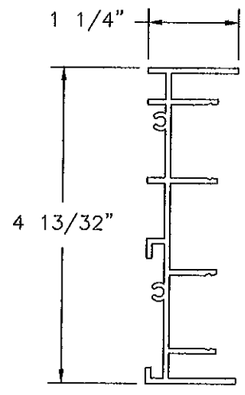

2 **2 TRACK FRAME JAMB**
ALUMINUM 6063-T6 .075" THICK

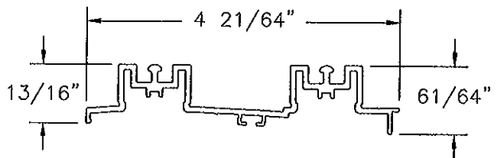

4 **2 TRACK SILL INSERT**
ALUMINUM 6063-T6 .075" THICK

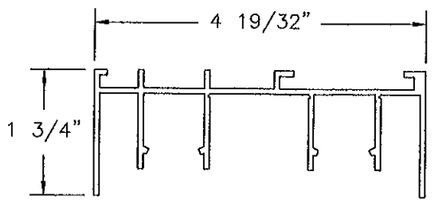

1 **2 TRACK FRAME HEAD**
ALUMINUM 6063-T6 .075" THICK

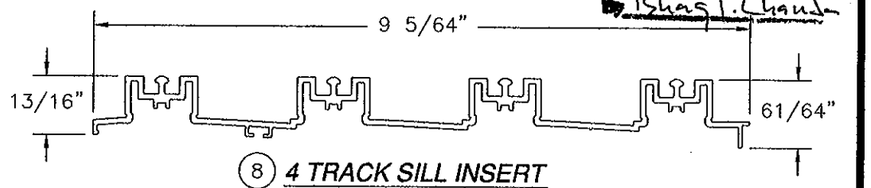

8 **4 TRACK SILL INSERT**
ALUMINUM 6063-T6 .075" THICK

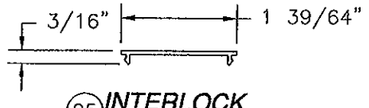

25 **INTERLOCK COVER**
ALUMINUM 6063-T6 .051" THICK

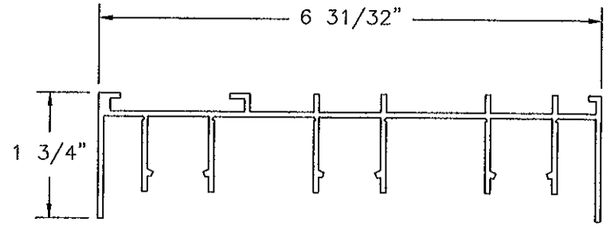

9 **3 TRACK FRAME HEAD**
ALUMINUM 6063-T6 .075" THICK

WinDoor INCORPORATED
7500 AMSTERDAM DRIVE
ORLANDO, FL 32832
Phone: 407.481.8400
Fax: 407.481.0505
www.windoorinc.com

8100 SERIES ALUMINUM 90° & 135° CORNER SGD
4'0 x 12'0 AND 5'0 x 10'0 PANELS – LMI
COMPONENTS

DRAWN:	DWG NO.	REV
TJH	08-01172	A
SCALE NTS	DATE 01/20/11	SHEET 28 OF 30

Luis R. Lomas P.E.
Florida No. 62514
06/02/11

REVISIONS			
REV	DESCRIPTION	DATE	APPROVED
A	PER DADE LETTER DATED MARCH 21, 2011	03/24/11	R.L.

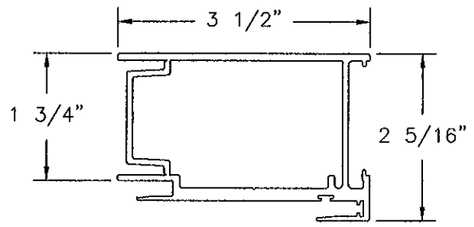

(23) PLAIN STILE INTERLOCK
ALUMINUM 6063-T6 .080" THICK

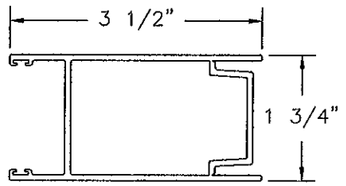

(17) LOCK STILE
ALUMINUM 6063-T6 .080" THICK

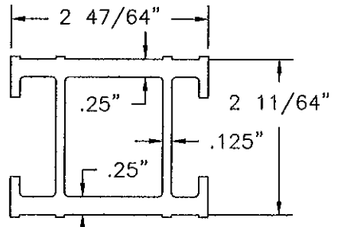

(22) BUTT STILE REINFOREMENT
ALUMINUM 6005-T5 .125" THICK

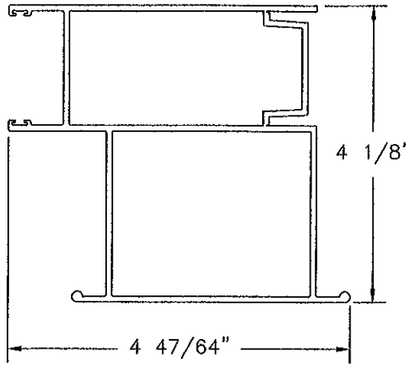

(21) MALE BUTT STILE EXT. OFFSET
ALUMINUM 6063-T6 .080" THICK

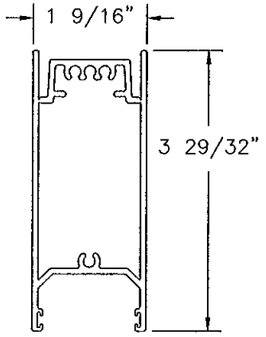

(16) BOTTOM RAIL
ALUMINUM 6063-T6 .080" THICK

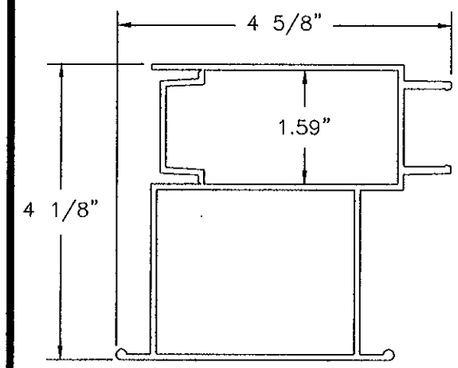

(20) FEMALE BUTT STILE EXT. OFFSET
ALUMINUM 6063-T6 .080" THICK

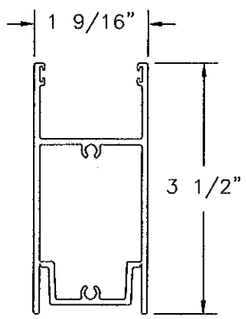

(15) TOP RAIL
ALUMINUM 6063-T6 .080" THICK

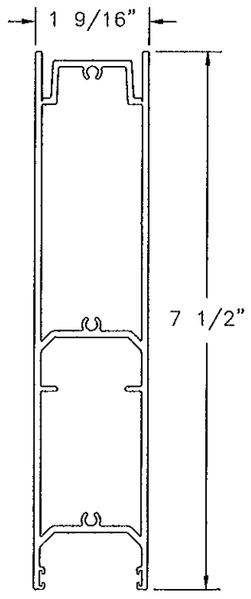

(75) TALL BOTTOM RAIL
ALUMINUM 6063-T6 .080" THICK

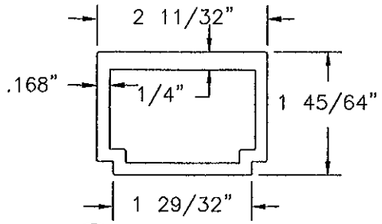

(40) INTERLOCK REINFORCING BAR
ALUMINUM 6005-T5 .168" THICK

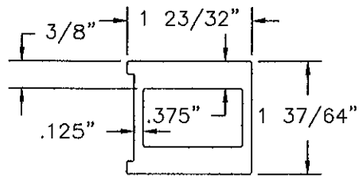

(41) 6000 BUTT STILE REINFORCING BAR
ALUMINUM 6061-T6 .375" THICK

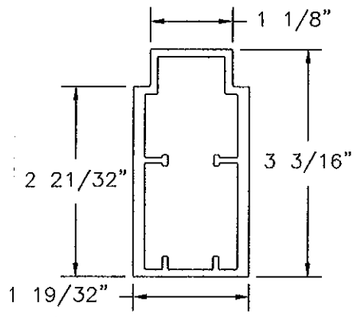

(42) 90° & 135° CORNER STILE REINFORCEMENT
ALUMINUM 6063-T5 .159" THICK

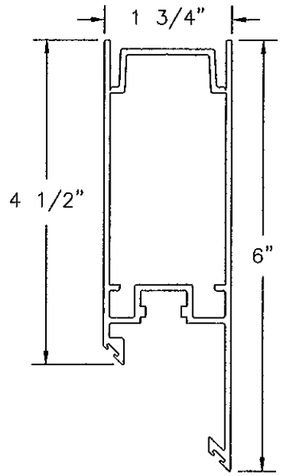

(18) 90° CORNER STILE
ALUMINUM 6063-T6 .081" THICK

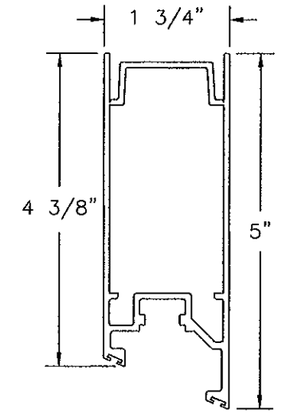

(77) 135° CORNER STILE
ALUMINUM 6063-T6 .081" THICK

Approved as complying with the Florida Building Code
Date Nov 03, 2011
NOA# 11-0208.01
Miami State Product Control
By Ishag I. Lhaut

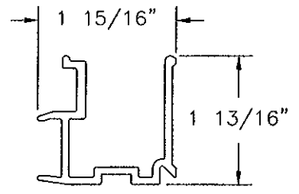

(42) 90° CORNER CLIP
ALUMINUM 6063-T6 .101" THICK

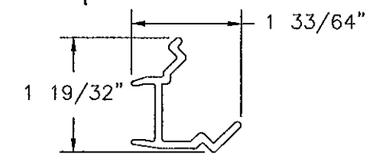

(78) 135° CORNER CLIP
ALUMINUM 6063-T6 .101" THICK

WinDoor INCORPORATED
7500 AMSTERDAM DRIVE
ORLANDO, FL 32832
Phone: 407.481.8400
Fax: 407.481.0505
www.windoorinc.com

8100 SERIES ALUMINUM 90° & 135° CORNER SGD
4'0 x 12'0 AND 5'0 x 10'0 PANELS – LMI
COMPONENTS

DRAWN:	DWG NO.	REV
TJH	08-01172	A
SCALE NTS	DATE 01/20/11	SHEET 29 OF 30

Luis R. Lomas
06/03/11
Luis R. Lomas P.E.
Florida No. 62514

REVISIONS			
REV	DESCRIPTION	DATE	APPROVED
A	PER DADE LETTER DATED MARCH 21, 2011	03/24/11	R.L.

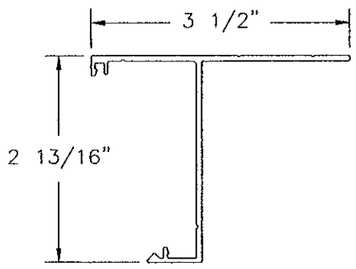

(38) POCKET DOOR HOOK STRIP MOUNT
ALUMINUM 6063-T6 .075" THICK

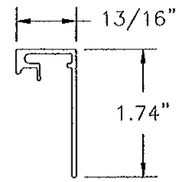

(32) 1 3/4" SILL RISER
ALUMINUM 6063-T6 .060" THICK

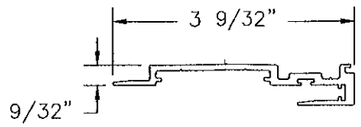

(23) PLAIN STILE INTERLOCK
ALUMINUM 6063-T6 .080" THICK

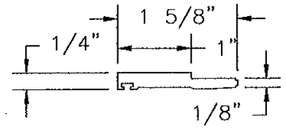

(30) 1" HORIZONTAL GLASS STOP
ALUMINUM 6063-T6 .20" THICK

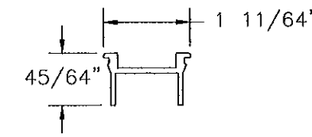

(27) PANEL STILE JAMB INSERT
ALUMINUM 6063-T6 .075" THICK

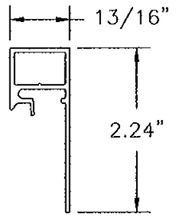

(33) 2 1/4" SILL RISER
ALUMINUM 6063-T6 .060" THICK

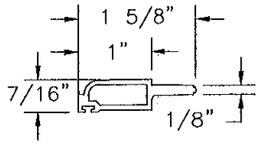

(28) 9/16" HORIZONTAL GLASS STOP
ALUMINUM 6063-T6 .070" THICK

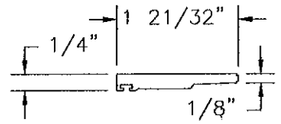

(31) 1" VERTICAL GLASS STOP
ALUMINUM 6063-T6 .20" THICK

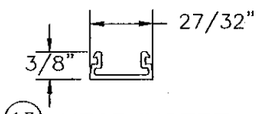

(13) HEAD INSERT
ALUMINUM 6063-T6 .060" THICK

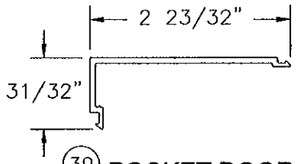

(39) POCKET DOOR HOOK STRIP COVER
ALUMINUM 6063-T6 .075" THICK

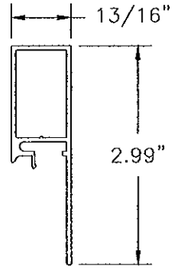

(34) 3" SILL RISER
ALUMINUM 6063-T6 .060" THICK

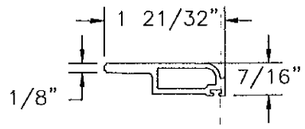

(29) 9/16" VERTICAL GLASS STOP
ALUMINUM 6063-T6 .070" THICK

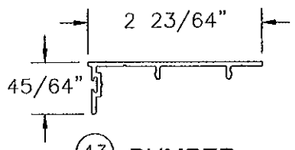

(43) BUMPER JAMB INSERT
ALUMINUM 6063-T6 .060" THICK

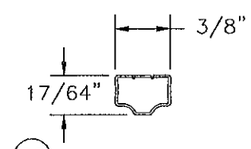

(80) SPACER
ALUMINUM AW3000 .015" THICK

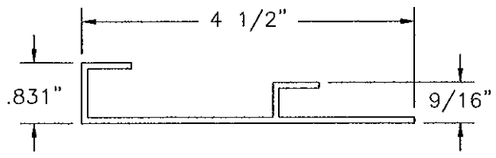

(38) POCKET DOOR HOOK STRIP
ALUMINUM 6063-T6 .080" THICK

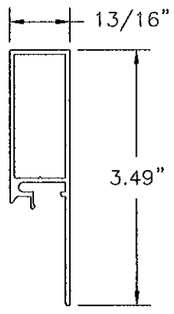

(35) 3 1/2" SILL RISER
ALUMINUM 6063-T6 .060" THICK

Approved as complying with the Florida Building Code
Date NOVEMBER 03, 2011
NOA# 11-0208.01
Miami Dade Product Control
By Ishag I. Chanda

WinDoor INCORPORATED
7500 AMSTERDAM DRIVE
ORLANDO, FL 32832
Phone: 407.481.8400
Fax: 407.481.0505
www.windoorinc.com

8100 SERIES ALUMINUM 90° & 135° CORNER SGD
4'0 x 12'0 AND 5'0 x 10'0 PANELS – LMI
COMPONENTS

DRAWN:	DWG NO.	REV
TJH	08-01172	A
SCALE NTS	DATE 01/20/11	SHEET 30 OF 30

Luis R. Lomas
06/03/11
Luis R. Lomas P.E.
Florida No. 62514