MIAMI-DADE COUNTY
BUILDING AND NEIGHBORHOOD COMPLIANCE DEPARTMENT (BNC)
BOARD AND CODE ADMINISTRATION DIVISION

MIAMI-DADE COUNTY
PRODUCT CONTROL SECTION
11805 SW 26 Street, Room 208
Miami, Florida 33175-2474
T (786) 315-2590 F (786) 315-2599
www.miamidade.gov/building

NOTICE OF ACCEPTANCE (NOA)

Clopay Building Products Company
8585 Duke Boulevard
Mason, OH 45040

SCOPE: This NOA is being issued under the applicable rules and regulations governing the use of construction materials. The documentation submitted has been reviewed by Miami-Dade County Product Control Section and accepted by the Board of Rules and Appeals (BORA) to be used in Miami Dade County and other areas where allowed by the Authority Having Jurisdiction (AHJ).

This NOA shall not be valid after the expiration date stated below. The Miami-Dade County Product Control Section (In Miami Dade County) and/or the AHJ (in areas other than Miami Dade County) reserve the right to have this product or material tested for quality assurance purposes. If this product or material fails to perform in the accepted manner, the manufacturer will incur the expense of such testing and the AHJ may immediately revoke, modify, or suspend the use of such product or material within their jurisdiction. BORA reserves the right to revoke this acceptance, if it is determined by Miami-Dade County Product Control Section that this product or material fails to meet the requirements of the applicable building code.

This product is approved as described herein, and has been designed to comply with the Florida Building Code, including the High Velocity Hurricane Zone.

DESCRIPTION: Steel Garage Door up to 16'2" wide w/ Optional Impact Resistant Lites

APPROVAL DOCUMENT: Drawing No. **101300**, titled "Double Car W8 Hurricane Pan Door", sheet 1 through 3 of 3, dated 02/15/95, with last revision 14, dated 06/16/08, prepared by Clopay Building Products Company, signed and sealed by Scott Hamilton, P.E., bearing the Miami-Dade County Product Control renewal stamp with the Notice of Acceptance number and expiration date by the Miami-Dade County Product Control Section.

MISSILE IMPACT RATING: Large and Small Missile Impact Resistant

LABELING: A permanent label with the manufacturer's name or logo, manufacturing address, model number, the positive and negative design pressure rating, indicate impact rated if applicable, installation instruction drawing reference number, approval number (NOA), the applicable test standards, and the statement reading 'Miami-Dade County Product Control Approved' is to be located on the door's side track, bottom angle, or inner surface of a panel.

RENEWAL of this NOA shall be considered after a renewal application has been filed and there has been no change in the applicable building code negatively affecting the performance of this product.

TERMINATION of this NOA will occur after the expiration date or if there has been a revision or change in the materials, use, and/or manufacture of the product or process. Misuse of this NOA as an endorsement of any product, for sales, advertising or any other purposes shall automatically terminate this NOA. Failure to comply with any section of this NOA shall be cause for termination and removal of NOA.

ADVERTISEMENT: The NOA number preceded by the words Miami-Dade County, Florida, and followed by the expiration date may be displayed in advertising literature. If any portion of the NOA is displayed, then it shall be done in its entirety.

INSPECTION: A copy of this entire NOA shall be provided to the user by the manufacturer or its distributors and shall be available for inspection at the job site at the request of the Building Official.

This NOA **renews NOA # 08-0624.03** and consists of this page 1 and evidence pages E-1 and E-2, as well as approval document mentioned above.

The submitted documentation was reviewed by **Carlos M. Utrera, P.E.**

MIAMI-DADE COUNTY APPROVED

03/18/11

NOTICE OF ACCEPTANCE: EVIDENCE SUBMITTED

A. DRAWINGS

1. Drawing No. **101300**, titled "Double Car W8 Hurricane Pan Door", sheet 1 through 3 of 3, dated 02/15/95, with last revision 14, dated 06/16/08, prepared by Clopay Building Products Company, signed and sealed by Scott Hamilton, P.E.

B. TESTS *"Submitted under NOA # 08-0624.03"*

1. Test reports on 1) Uniform Static Air Pressure Test, Loading per FBC TAS 202-94
   2) Large Missile Impact Test per FBC, TAS 201-94
   3) Cyclic Wind Pressure Loading per FBC, TAS 203-94
   4) Forced Entry Test, per FBC 2411 3.2.1, TAS 202-94
   5) Tensile Test per ASTM E8

   Along with marked-up drawings and installation diagram of Clopay 16'-2"x 8', 24 ga. steel garage door Model 94W8 with windows, prepared by American Test Lab, Inc., Test Report No. **ATLNC 0327.01-08**, dated 05/13/08, signed and sealed by David W. Johnson, P.E.

"Submitted under NOA # 06-0227.04"

2. Test reports on 1) Uniform Static Air Pressure Test, Loading per FBC TAS 202-94
   2) Large Missile Impact Test per FBC, TAS 201-94
   3) Cyclic Wind Pressure Loading per FBC, TAS 203-94

   Along with marked-up drawings and installation diagram of Clopay16'-2"x 8', 24ga. steel garage door Model 94, prepared by American Test Lab, Inc., Test Report No. **ATLNC 1102.01-05**, dated 11/22/05, signed and sealed by David W. Johnson, P.E.
3. Test reports on 1) Uniform Static Air Pressure Test, Loading per FBC TAS 202-94
   2) Large Missile Impact Test per FBC, TAS 201-94
   3) Cyclic Wind Pressure Loading per FBC, TAS 203-94

   Along with marked-up drawings and installation diagram of Clopay16'-2"x 8', 24ga. steel garage door Model 94, prepared by American Test Lab, Inc., Test Report No. **ATLNC 0118.01-06**, dated 03/07/06, signed and sealed by David W. Johnson, P.E.
4. Test report on Salt Spray per ASTM B117 of painted G40 galvanized coated panels, prepared by Stork Materials Technology, Test Report No. **30160-04-63365**, dated 01/26/05, signed by John D. Lee, P.E.
5. Test report on Tensile Test per ASTM E 8, prepared by Q.C. Metallurgical, Inc, Report No. **7KM-1086,** dated 11/22/05, signed and sealed by F. Grate, P.E.

03/18/11

Carlos M. Utrera, P.E.
Product Control Examiner
NOA No 11-0217.01
Expiration Date: March 26, 2016
Approval Date: March 31, 2011

NOTICE OF ACCEPTANCE: EVIDENCE SUBMITTED

C. CALCULATIONS *"Submitted under NOA # 06-0227.04"*

1. Jamb anchor calculations, complying with FBC-2004, prepared by Clopay Building Products Company, dated 05/25/06, signed and sealed by Scott Hamilton, P.E.

D. QUALITY ASSURANCE

1. Miami-Dade Building and Neighborhood Compliance Department (BNC)

E. MATERIAL CERTIFICATIONS *"Submitted under NOA # 08-0624.03"*

1. Test report on Accelerated Weathering Using Xenon Arc Light Apparatus per ASTM G155 of Lexan SLX2432T Clear Polycarbonate, prepared by Hurricane Engineering & Testing, Inc., Test Report No. **HETI-06-A002**, dated 12/04/06, signed by Rafael E. Droz-Seda, P.E.
2. Test report on Self-Ignition Temperature per ASTM D1929, Rate of Burn per ASTM D635, and Smoke Density per ASTM D2843 of the Lexan Plastic, prepared by ETC Laboratories, Test Report No. **ETC-06-1024-17496.0,** dated 05/26/06, signed by Joseph L. Doldan, P.E.

F. STATEMENTS

1. Statement letter of conformance with 2007 FBC, issued by Clopay Building Products Company, dated 02/09/11, signed and sealed by Scott Hamilton, P.E.
2. Statement letter of no financial interest issued by Clopay Building Products Company, dated 02/09/11, signed and sealed by Scott Hamilton, P.E.

03/18/11

Carlos M. Utrera, P.E.
Product Control Examiner
NOA No 11-0217.01
Expiration Date: March 26, 2016
Approval Date: March 31, 2011

CLOPAY MODELS 84A, 94, 98, H94 ⚠
IDEAL MODELS 4F, 4RST, H4ST ⚠
HOLMES MODEL 48 ⚠

REV	DATE	DESCRIPTION
8	11/18/05	CORRECTED BRACKET MOUNT DEPICTION; PUSH-NUT FOR 2" ROLLER WAS LOCKNUT; ADDED ROLLER TIRE OPTION; REVISED JAMB ATTACHMENT TABLE; ADDED IDEAL/HOLMES BRANDS.
9	12/7/2005	MIN YIELD WAS 38KSI. ADDED BRACKET LOCATIONS.
10	12/7/2005	ADDED 1 PIECE DOUBLE END STILE
11	05/19/2006	MIN YIELD WAS 37.2KSI; REVISED LOCK NOTE; DWG WAS (2) SHEETS; DESIGN ENGINEER WAS M. WESTERFIELD.
12	09/11/2006	UPDATED PER M-D COMMENTS
13	12/13/2006	REVISED MIN YIELD PER M-D COMMENTS (WAS 34.6KSI)
14	06/16/2008	ADDED OPTIONAL IMPACT RESISTANT LITES.

DOOR HEIGHT	NUMBER OF SECTIONS*
6'0" TO 7'0"	4
7'6" TO 8'9"	5
9'0" TO 10'6"	6
10'9" TO 12'0"	7

* - SECTIONS ARE EITHER 18" OR 21" HIGH

SECTION B-B

⚠ OPTIONAL IMPACT RESISTANT GLAZING

ONE ROW OF IMPACT-RESISTANT GLAZING IN EITHER TOP SECTION (SHOWN) OR NEXT-TO-THE-TOP SECTION (NOT SHOWN).
MAX. GLAZING SIZE IS 18-1/2" x 11".
GLAZING IS INJECTION MOLDED GE LEXAN SLX2432T, AN APPROVED CC2 PLASTIC IN ACCORDANCE WITH IBC/FBC 2606.
SEE SECTION B-B FOR ASSEMBLY DETAILS.

⚠ DETAIL 'D'

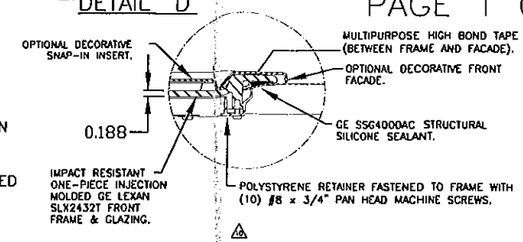

ONE INTERMEDIATE STILE BETWEEN EACH EMBOSS LOCATION. ATTACHED W/ PATENTED TOG-L-LOC SYSTEM (TOP & BOT) AND URETHANE ADHESIVE (ALONG CENTER).

⚠ SPECIAL FASTENER REQIREMENTS FOR DOORS WITH OPTIONAL IMPACT RESISTANT LITES FOR THESE (2) LOCATIONS FOR CENTER STRAP ON EACH SECTION. SEE SIDE VIEW A-A FOR DETAILS.

1-PC END STILE CONFIGURATION: (SEE ILLUSTRATION BELOW)
16 GA. GALVANIZED 1-PC DOUBLE END STILES ATTACHED TO DOOR SKIN WITH PATENTED TOG-L-LOC SYSTEM, (2) AT TOP INSIDE, (2) BOTTOM INSIDE, (4) ALONG OUTSIDE EDGE OF 18" SECTIONS & (6) ALONG OUTSIDE EDGE OF 21" SECTIONS.

⚠ ALTERNATE 2-PC END STILE CONFIGURATION: (SEE ILLUSTRATION BELOW)
16 GA. GALVANIZED END STILES ATTACHED TO DOOR SKIN WITH PATENTED TOG-L-LOC SYSTEM [(2) AT TOP INSIDE, (2) BOTTOM INSIDE, (4) ALONG OUTSIDE EDGE OF 18" SECTIONS & (6) ALONG OUTSIDE EDGE OF 21" SECTIONS] AND SEPARATE 18 GA. GALV. INNER DOUBLE END STILES ATTACHED TO TOP AND BOTTOM RAIL WITH PATENTED TOG-L-LOC SYSTEM.

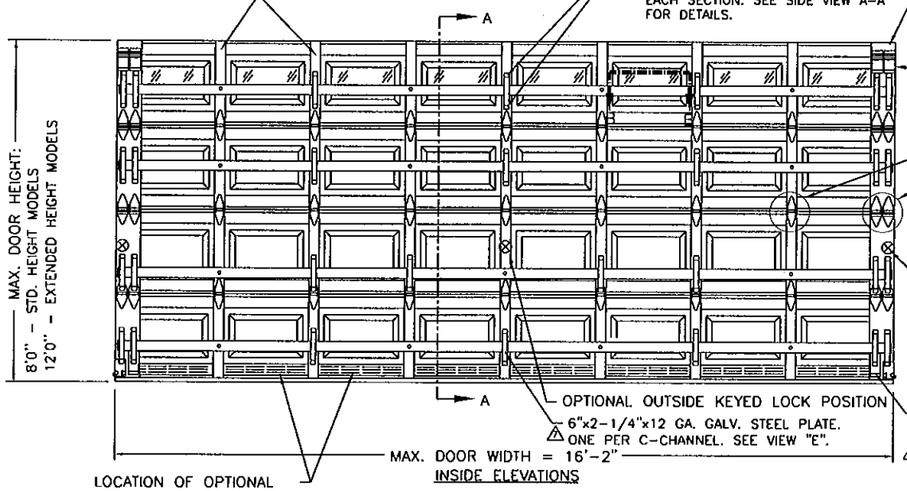

⚠ (2) 12 GA. GALV. STEEL TOP ROLLER BRACKETS (2-1/2" x 5-3/8"). EACH BRACKET ATTACHED W/(4) #14x5/8" SHEET METAL SCREWS. ADJUSTABLE SLIDE ATTACHED TO TOP BRACKET WITH (2) 1/4"x1/2" BOLTS AND NUTS PER BRACKET.

VIEW "C"

VIEW "B"

⚠ LOCK POSITION (BOTH SIDES). TWO POINT LOCKING REQUIRED. LOCKS HAVE 5/8" MIN. ENGAGEMENT. SEE LAYOUT OF EACH LOCK OPTION BELOW.

OPTIONAL OUTSIDE KEYED LOCK POSITION

6"x2-1/4"x12 GA. GALV. STEEL PLATE. ⚠ ONE PER C-CHANNEL. SEE VIEW "E".

LOCATION OF OPTIONAL VENTS. AREA OF VENTS NOT ⚠ TO EXCEED 120 SQ. INCHES.

1-PC END STILE CONFIGURATION (ILLUSTRATED)

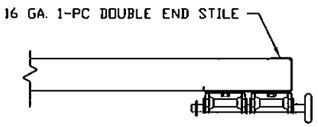

ALTERNATE 2-PC END STILE CONFIGURATION (ILLUSTRATED)

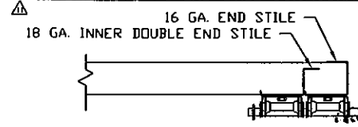

PRODUCT REVIEWED as complying with the Florida Building Code
Acceptance No 11-0217.01
Expiration Date 03/26/2016
By
Miami-Dade Product Control

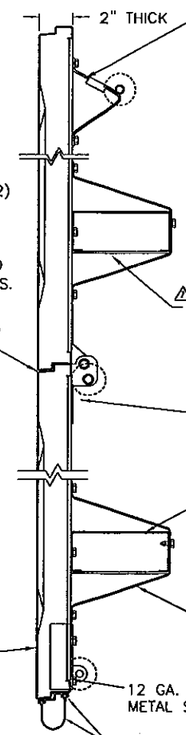

12 GA. GALV. STEEL TOP ROLLER BRACKET. SEE INSIDE ELEVATION FOR FASTENER DETAILS. ⚠

DOORS WITH 2" TRACK USE (2) STACKED LHR BRACKETS (2-1/2"x5"x 12 GA.) AS INNER BOTTOM BRACKET ATTACHED WITH (2) 1/4"x3/4" SELF TAPPING SCREWS.
⚠ DOORS WITH 3" TRACK USE USE (1) 3-IN ROLLER CARRIER (1-1/8"x2-1/4" x 12 GA.) AS INNER BOTTOM BRACKET ATTACHED WITH (2) 1/4"x3/4" SELF TAPPING SCREWS.

AT THE LOCATIONS NOTED ON INSIDE ELEVATION, ATTACH THE 6"x2-1/4"x12 GA. STEEL PLATE TO THE UNDERSIDE OF THE THE C-CHANNEL WITH (4) 1/4"x3/4" SELF TAPPING SCREWS.

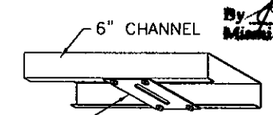

⚠ VIEW "E"

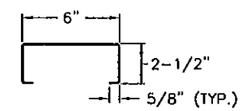

VIEW "D"
6" TALL
C-CHANNEL 16 GA.
GALV. STEEL

⚠ 6"x2-1/4"x12 GA. GALV. STEEL PLATE. ONE PER C-CHANNEL. SEE VIEW "E".

14 GA. GALV. ROLLER HINGE. EACH HINGE FASTENED TO END STILES W/(4) #14x5/8" SHEET METAL AND (4) 1/4"x3/4" SELF TAPPING SCREWS. SEE VIEW "B".

ONE 6" TALL C-CHANNEL PER DOOR SECTION. (SEE VIEW "D") C-CHANNEL ATTACHED AT EACH STILE LOCATION WITH (1) 1/4"x3/4" SELF TAPPING SCREW.

1-1/4" WIDE x 16 GA. GALV. STRAP. (7) PER DOOR SECTION. OPTIONAL: (8) STRAPS ON 2ND (LOCK) SECTION (SEE INSIDE ELEVATION). EACH STRAP ATTACHED WITH (3) 1/4"x3/4" SELF TAPPING SCREWS (TWO SCREWS TO DOOR, ONE SCREW TO C-CHANNEL).
⚠ SPECIAL REQUIREMENTS FOR DOORS WITH OPTIONAL IMPACT RESISTANT LITES: FOR STRAPS AT CENTER OF DOOR, TOP AND BOTTOM SCREWS SHALL BE REPLACED BY 1/4-20x5/8 AND FASTENED WITH (1) 1/4" NUT EACH. A CLEARANCE HOLE (9/32" DIA.) MAY BE DRILLED FOR EACH FASTENER.

12 GA. GALV. STEEL BOTTOM BRACKET (3-1/2" x 5-1/2") ATTACHED WITH (2) #14x5/8" SHEET METAL SCREWS. ⚠

ALUMINUM EXTRUSION & VINYL WEATHERSTRIP.

SECTION A-A (SIDE VIEW)

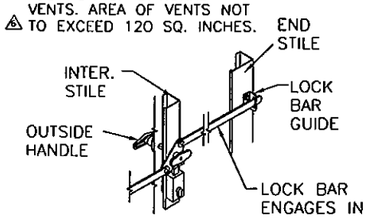

OUTSIDE KEYED LOCK
LOCK BAR LOCK OPTION

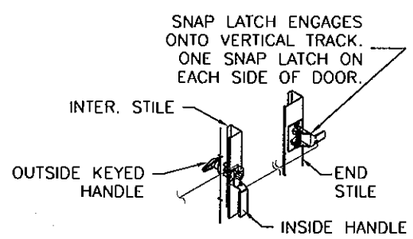

OUTSIDE KEYED LOCK
SNAP LATCH LOCK OPTION

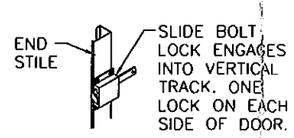

INSIDE SLIDE BOLT LOCK

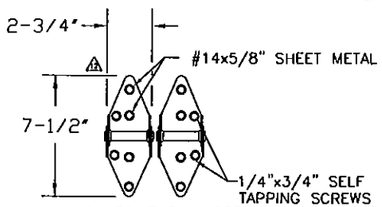

14 GA. END HINGES
VIEW "B"

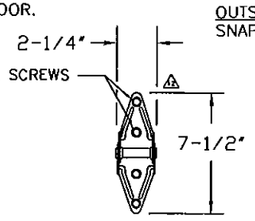

18 GA. INTERMEDIATE HINGE
VIEW "C"

24 GA. (0.0239" MIN. THICK) DDS STEEL (MIN. YIELD STRENGTH: 37.2 KSI) EXTERIOR SKIN WITH G-40 GALVANIZING, BAKED-ON ⚠⚠⚠⚠ PRIMER AND A BAKED-ON POLYESTER PAINTED TOP COAT APPLIED TO BOTH SIDES OF STEEL SKIN. (ASTM No. A653).

INSTALLER MODEL	RETAIL MODEL	DESCRIPTION
⚠ 94, H94, 4RST, H4ST	84A, 48	WOODGRAIN TEXTURE, RAISED PANEL, GALV. INTER. STILES
⚠ 98, 4F	-	WOODGRAIN TEXTURE, FLUSH PANEL, GALV. INTER. STILES

SCOTT HAMILTON LICENSE No. 63286 STATE OF FLORIDA PROFESSIONAL ENGINEER

⚠ DESIGN ENGINEER
SCOTT HAMILTON, P.E.
FLORIDA LICENSE No. 63286

DESIGN LOADS: +46.8 P.S.F. & -52.0 P.S.F.

Clopay Building Products Company

TOLERANCES
Unless Stated Otherwise
.00 = ±.03
.000 = ±.015
.0000 = ±.007
Degrees = ±1/2°

CLOPAY BUILDING PRODUCTS
8585 DUKE BLVD.
MASON, OHIO 45040
(513) 770-4800

SCALE: NOTED
DATE: 2/15/95
DRAWN BY: MWW
CHECKED BY: SH

PAGE: 1 OF 3
MAX. SIZE: 16'2"W x 12'0"H
DESCRIPTION: DOUBLE CAR W8 HURRICANE PAN DOOR
B
DRAWING NUMBER: 101300
VER: MD

CLOPAY MODELS 84A, 94, 98, H94 ⚠
IDEAL MODELS 4F, 4RST, H4ST ⚠
HOLMES MODEL 48 ⚠

TRACK AND JAMB CONFIGURATION

REV	DATE	DESCRIPTION
14	–	SEE REVISION HISTORY ON SHEET ONE

TRACK CONFIGURATION: DOORS UP TO 8'0" HIGH
STANDARD HEIGHT MODELS 48, 84A, 94, 98, 4RST, 4F ⚠

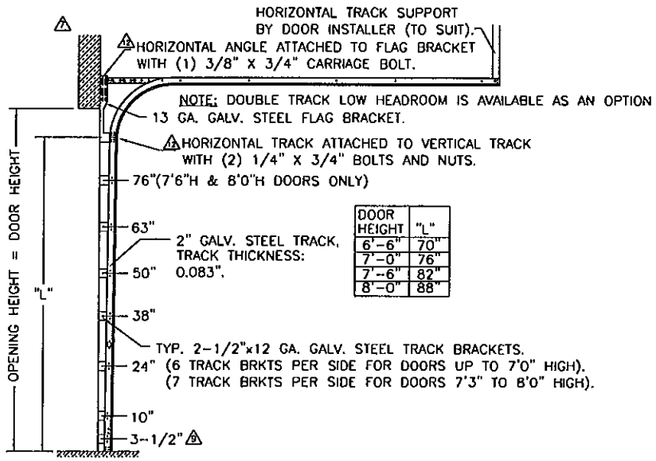

DOOR HEIGHT	"L"
6'-6"	70"
7'-0"	76"
7'-6"	82"
8'-0"	88"

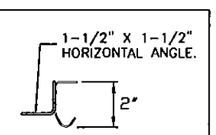

SECTION VIEW OF TRACK AND HORIZONTAL ANGLE. TRACK FASTENED TO ANGLE WITH 1/4" RIVETS AT 24" MAX. O.C. SPACING.

TRACK CONFIGURATION: DOORS 8'3" TO 12'0" HIGH
EXTENDED HEIGHT MODELS H94, H4ST, 98, 4F ⚠

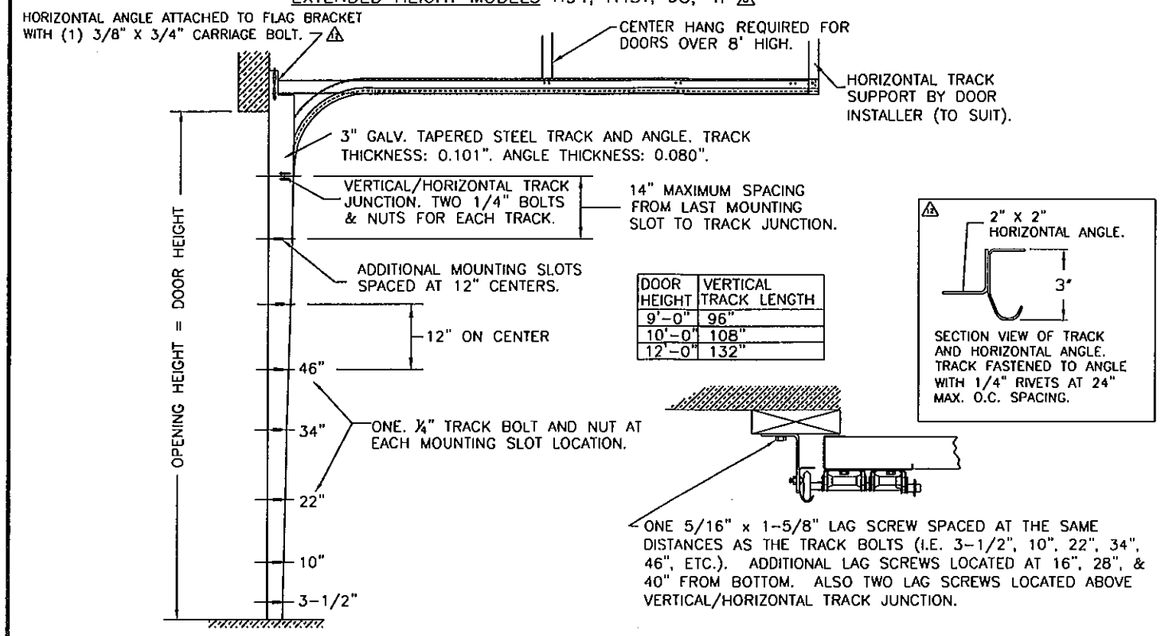

DOOR HEIGHT	VERTICAL TRACK LENGTH
9'-0"	96"
10'-0"	108"
12'-0"	132"

SECTION VIEW OF TRACK AND HORIZONTAL ANGLE. TRACK FASTENED TO ANGLE WITH 1/4" RIVETS AT 24" MAX. O.C. SPACING.

JAMB CONFIGURATION: DOORS UP TO 8'0" HIGH
STANDARD HEIGHT MODELS 48, 84A, 94, 98, 4RST, 4F ⚠

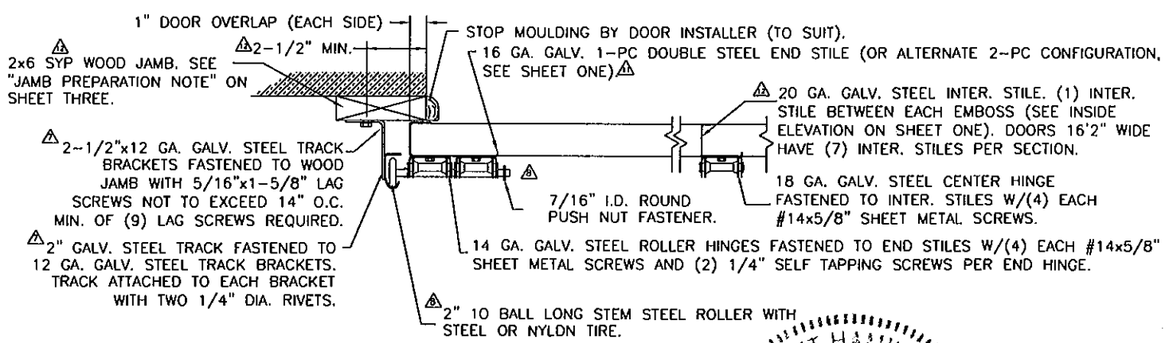

JAMB CONFIGURATION: DOORS 8'3" TO 12'0" HIGH
EXTENDED HEIGHT MODELS H94, H4ST, 98, 4F ⚠

PRODUCT RENEWED as complying with the Florida Building Code Acceptance No 11-0217.01 Expiration Date 03/26/2016 By [signature] Miami Dade Product Control

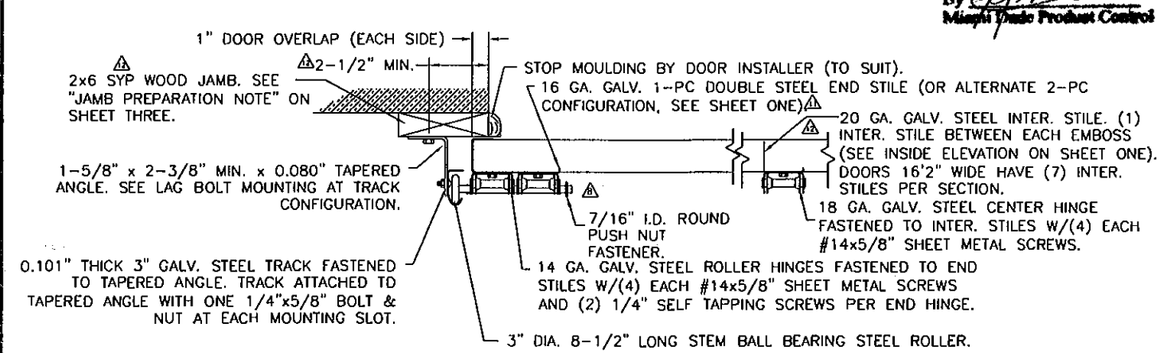

⚠ DESIGN ENGINEER
SCOTT HAMILTON, P.E.
FLORIDA LICENSE No. 63286
DESIGN LOADS: +46.6 P.S.F. & -52.0 P.S.F.

SCOTT HAMILTON LICENSED STATE OF FLORIDA PROFESSIONAL ENGINEER No. 63286

Clopay Building Products Company

TOLERANCES Unless Stated Otherwise	
.0D =	±.03
.000 =	±.015
.0000 =	±.007
Degrees =	±1/2°

CLOPAY BUILDING PRODUCTS
8585 DUKE BLVD.
MASON, OHIO 45040
(513) 770-4800

SCALE:	NOTED
DATE:	2/15/95
DRAWN BY:	MWW
CHECKED BY:	SH
PAGE:	2 OF 3
MAX. SIZE	16'2"W x 12'0"H
DESCRIPTION:	DOUBLE CAR W8 HURRICANE PAN DOOR
B	
DRAWING NUMBER:	101300
VER:	MD

CLOPAY MODELS 84A, 94, 98, H94 ⚠
IDEAL MODELS 4F, 4RST, H4ST ⚠
HOLMES MODEL 48 ⚠

REV	DATE	DESCRIPTION
14	–	SEE REVISION HISTORY ON SHEET ONE

JAMB ATTACHMENT AND SUPPORTING STRUCTURE

2x6 JAMB TO SUPPORTING STRUCTURE ATTACHMENT: NOTES

1) ALL THE LOAD FROM THE DOOR IS TRANSFERRED TO THE TRACK AND THEN FROM THE TRACK TO THE 2x6 VERTICAL SYP (GRADE #2 OR BETTER) JAMBS. NO LOAD FROM THE DOOR IS TRANSFERRED TO THE HORIZONTAL (TOP) JAMB.
2) ALL JAMB FASTENERS MAY BE (BUT ARE NOT REQUIRED TO BE) COUNTERSUNK TO PROVIDE A FLUSH MOUNTING SURFACE.
3) EACH VERTICAL JAMB SEES A MAXIMUM DESIGN LOAD OF +372.8 LB & −416 LB. PER LINEAR FOOT OF JAMB.
⚠ 4) A 1/3 STRESS INCREASE FOR WIND LOAD WAS NOT USED IN THE CALCULATION OF ALLOWABLE LOADS FOR ANCHORS AND FASTENERS FOR STEEL, CONCRETE AND MASONRY.

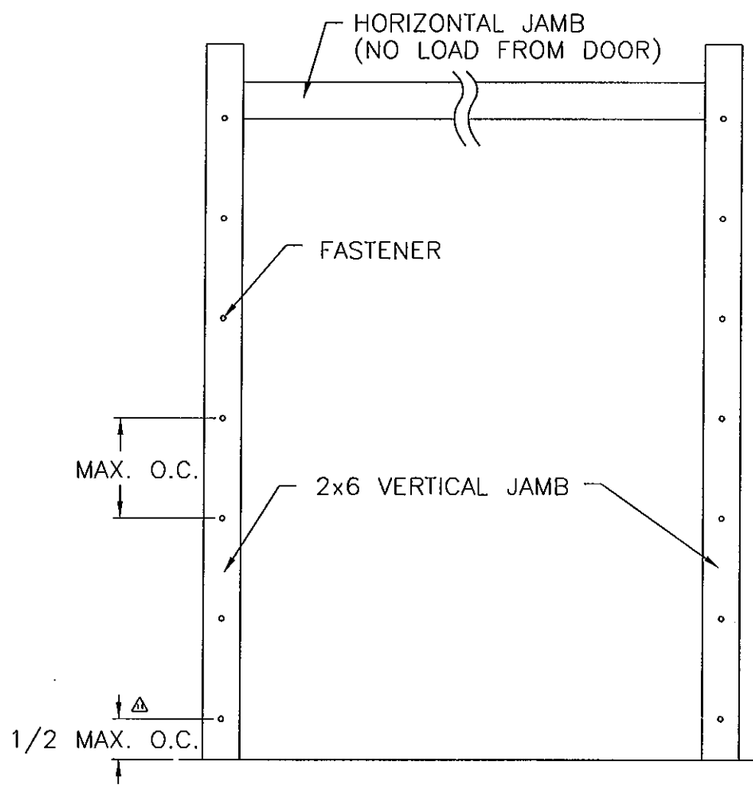

WOOD FRAME BUILDINGS

STUD WALLS OF DOOR OPENING SHALL BE FRAMED SOLID BY NOT LESS THAN (3) 2x6 PRESSURE TREATED GRADE #2 OR BETTER WOOD STUD OF A STRESS GRADE NOT LESS THAN 1200 PSI NOMINAL EXTREME FIBER STRESS IN BENDING (F_b) FOR DOORS UP TO 8'0" HIGH AND NOT LESS THAN (4) 2x6 PRESSURE TREATED GRADE #2 OR BETTER WOOD STUD OF A STRESS GRADE NOT LESS THAN 1200 PSI NOMINAL EXTREME FIBER STRESS IN BENDING (F_b) FOR DOORS 8'3" TO 12'0" HIGH. STUD WALLS TO BE CONTINUOUS FROM FOOTING TO TIE BEAMS AND IN ACCORDANCE WITH THE FLORIDA BUILDING CODE.

BLOCK WALL OR CONCRETE

2x6 WOOD JAMB SHALL BE ANCHORED TO GROUT REINFORCED BLOCK WALL OR CONCRETE COLUMN. BLOCK WALL CELLS SHALL BE FILLED WITH CONCRETE AND REINFORCED WITH #5 BAR EXTENDING INTO THE FOOTING AND INTO TIE BEAMS. ALL BARS SHALL BE CONTINUOUS FROM THE TIE BEAMS TO FOOTING PER BLOCK WALL OR CONCRETE COLUMN. BLOCK WALLS AND CONCRETE COLUMNS TO BE DESIGNED BY BUILDING PROFESSIONAL OF RECORD AND IN ACCORDANCE WITH THE FLORIDA BUILDING CODE.

JAMB PREPARATION NOTE

THE METHOD OF ATTACHMENT TO THE SUPPORTING STRUCTURE OF THE PRESSURE TREATED 2x6 WOOD JAMBS SHALL BE APPROVED BY THE PROFESSIONAL OF RECORD FOR THE STRUCTURE AND IN ACCORDANCE WITH CURRENT BUILDING CODES FOR THE LOADS LISTED ON THIS DRAWING. PREPARATION OF JAMBS BY OTHERS.

ALL MOUNTING OF TRACK, ANGLES, HORIZONTAL TRACK SUPPORTS, AND ALL OTHER DOOR HARDWARE TO BE INSTALLED PER CLOPAY INSTALLATION INSTRUCTIONS SUPPLIED WITH DOOR SYSTEM UNLESS OTHERWISE NOTED.

2x6 JAMB TO SUPPORTING STRUCTURE MINIMUM FASTENER REQUIREMENTS

(NOT TO BE USED FOR ATTACHMENT OF TRACK BRACKETS OR ANGLE TO 2x6 VERTICAL JAMBS OR SUPPORTING STRUCTURE)

BUILDING TYPE	FASTENER TYPE	* MAXIMUM ON CENTER DISTANCE BETWEEN FASTENERS	STEEL WASHERS REQUIRED?
⚠ C-90 BLOCK (HOLLOW OR GROUTED)	1/4" x 3" (1-1/4" EMBED) ITW TAPCON CONCRETE ANCHOR (2-1/2" MIN. EDGE DISTANCE)	6-1/4"	1" O.D.
⚠ 3,000 PSI MIN. CONCRETE	1/4" x 4" (1-3/4" EMBED) ITW TAPCON CONCRETE ANCHOR (2-1/2" MIN. EDGE DISTANCE)	18"	1" O.D.
⚠ 3,000 PSI MIN. CONCRETE	1/2" x 4" (2-1/4" EMBED) ITW RED HEAD TRUBOLT WEDGE ANCHOR (2" MIN. EDGE DISTANCE)	24"	INCLUDED
⚠⚠ WOOD FRAME (SYP 0.55 SG)	1/2" x 4" (1-5/8" EMBED) LAG SCREW (ASTM A307, GRADE A) (2-1/2" MIN. EDGE DISTANCE)	14"	1" O.D.
⚠ 2,000 PSI MIN. CONCRETE	3/8" x 5" (1-3/4" EMBED) WEJ-IT SLEEVE ANCHOR (2-1/2" MIN. EDGE DISTANCE)	14"	INCLUDED

CLOPAY DOES NOT SUPPLY JAMB ATTACHMENT FASTENERS.

* – FIRST ANCHOR/SCREW STARTING FROM BOTTOM AT NO MORE THAN HALF OF MAXIMUM ON CENTER DISTANCE.

PRODUCT RENEWED
as complying with the Florida Building Code
Acceptance No 11-0217.01
Expiration Date 12/12/2016
By
Miami Dade Product Control

SCOTT HAMILTON LICENSE No. 63286 STATE OF FLORIDA PROFESSIONAL ENGINEER

DESIGN ENGINEER
SCOTT HAMILTON, P.E.
FLORIDA LICENSE No. 63286

DESIGN LOADS: +46.6 P.S.F. & −52.0 P.S.F.

Clopay Building Products Company

CLOPAY BUILDING PRODUCTS
8585 DUKE BLVD.
MASON, OHIO 45040
(513) 770-4800

TOLERANCES Unless Stated Otherwise	
.00 = ±.03	
.000 = ±.015	
.0000 = ±.007	
Degrees = ±1/2°	

SCALE:	NOTED
DATE:	2/15/95
DRAWN BY:	MWW
CHECKED BY:	SH

PAGE:	3 OF 3
MAX. SIZE	16'2"W x 12'0"H
DESCRIPTION:	DOUBLE CAR W8 HURRICANE PAN DOOR
B	DRAWING NUMBER: 101300
VER:	MD