MIAMI-DADE COUNTY
BUILDING AND NEIGHBORHOOD COMPLIANCE DEPARTMENT (BNC)
BOARD AND CODE ADMINISTRATION DIVISION

MIAMI-DADE COUNTY
PRODUCT CONTROL SECTION
11805 SW 26 Street, Room 208
Miami, Florida 33175-2474
T (786) 315-2590 F (786) 315-2599
www.miamidade.gov/building/home/asp

NOTICE OF ACCEPTANCE (NOA)

T. M. Windows, LLC.
601 N.W. 12th Ave.
Pompano Beach, FL 33069

SCOPE:

This NOA is being issued under the applicable rules and regulations governing the use of construction materials. The documentation submitted has been reviewed and accepted by Miami-Dade County BNC -Product Control Section to be used in Miami Dade County and other areas where allowed by the Authority Having Jurisdiction (AHJ).

This NOA shall not be valid after the expiration date stated below. The Miami-Dade County Product Control Section (In Miami Dade County) and/or the AHJ (in areas other than Miami Dade County) reserve the right to have this product or material tested for quality assurance purposes. If this product or material fails to perform in the accepted manner, the manufacturer will incur the expense of such testing and the AHJ may immediately revoke, modify, or suspend the use of such product or material within their jurisdiction. BNC reserves the right to revoke this acceptance, if it is determined by Miami-Dade County Product Control Section that this product or material fails to meet the requirements of the applicable building code.
This product is approved as described herein, and has been designed to comply with the Florida Building Code, including the High Velocity Hurricane Zone.

DESCRIPTION: Series-249 Aluminum Outswing Doors w/wo Sidelites-L.M.I.

APPROVAL DOCUMENT: Drawing No. **W11-03**, titled "Series- 249 Alum Out-swing Door w/ Sidelites (L.M.I.)", sheets 1 through 16 of 16, prepared by AL-Farooq Corporation, dated 02/10/11 and last revised on APR 01, 2011, signed and sealed by Javad Ahmad, P.E., bearing the Miami-Dade County Product Control Approval stamp with the Notice of Acceptance number and approval date by the Miami-Dade County Product Control Section.

MISSILE IMPACT RATING: Large and Small Missile Impact Resistant

Limitation:

1. See sheet 5 for single or double Door Design Pressure (DP) rating Vs glass type and/ or threshold type (Exterior (+) water limit)
2. See sheet 6 for Stationary unit or doors w/ sidelite DP rating Vs glass type and/ or threshold type. Lower DP rating of Doors or Sidelites shall control when combined together.
3. See sheet 4 for Single Door w/ SHW design pressure rating Vs glass type and/ or threshold type, limited to single door application only.

LABELING: Each unit shall bear a permanent label with the manufacturer's name or logo, city, state and Series/Model and following statement: "Miami-Dade County Product Control Approved", unless otherwise noted herein.

RENEWAL of this NOA shall be considered after a renewal application has been filed and there has been no change in the applicable building code negatively affecting the performance of this product.

TERMINATION of this NOA will occur after the expiration date or if there has been a revision or change in the materials, use, and/or manufacture of the product or process. Misuse of this NOA as an endorsement of any product, for sales, advertising or any other purposes shall automatically terminate this NOA. Failure to comply with any section of this NOA shall be cause for termination and removal of NOA.

ADVERTISEMENT: The NOA number preceded by the words Miami-Dade County, Florida, and followed by the expiration date may be displayed in advertising literature. If any portion of the NOA is displayed, then it shall be done in its entirety.

INSPECTION: A copy of this entire NOA shall be provided to the user by the manufacturer or its distributors and shall be available for inspection at the job site at the request of the Building Official.
This NOA consists of this page 1 and evidence pages E-1, as well as approval document mentioned above.
The submitted documentation was reviewed by **Ishaq I. Chanda, P.E.**

MIAMI-DADE COUNTY APPROVED
4/14/11

NOTICE OF ACCEPTANCE: EVIDENCE SUBMITTED

A. DRAWINGS

1. Manufacturer's die drawings and sections.
2. Drawing No. **W11-03**, titled "Series- 249 Alum out-swing Door w/ Sidelites (L.M.I.)", sheets 1 through 16 of 16, prepared by AL-Farooq Corporation, dated 02/25/09 and last revised on Nov 18, 2010, signed and sealed by Javad Ahmad, P.E.

B. TESTS

1. Test reports on: 1) Air Infiltration Test, per FBC, TAS 202-94
   2) Uniform Static Air Pressure Test, Loading per FBC TAS 202-94
   3) Water Resistance Test, per FBC, TAS 202-94
   4) Large Missile Impact Test per FBC, TAS 201-94
   5) Cyclic Wind Pressure Loading per FBC, TAS 203-94
   6) Forced Entry Test, per FBC 2411 3.2.1, TAS 202-94

   along with marked-up drawings and installation diagram of aluminum outswing doors w/ wo Sidelites (samples A-1 thru F-1), prepared by Fenestration Testing lab, Inc., Test Report No. **FTL-6168,** dated 12/14/2010, witnessed by Jorge A. Causo, P. E. and signed and sealed by reviewing engineer Marlin D. Brinson, P. E.

   Note: This test report has an addendum letter dated March 28, 2011, issued by Fenestration Testing lab, Inc., signed and sealed by reviewing engineer Marlin D. Brinson, P. E.

C. CALCULATIONS

1. Anchor verification calculations and structural analysis, complying with FBC-2007, prepared by Al Farooq Corporation, dated 02/17/11 and last revised on 04/01/11, signed and sealed by Javad Ahmad, P.E
2. Glazing complies w/ ASTME-1300-02 & -04

D. QUALITY ASSURANCE

1. Miami Dade Building and Neighborhood Compliance Department (BNC).

E. MATERIAL CERTIFICATIONS

1. Notice of Acceptance No. **07-1116.04** issued to E.I. DuPont DeNemours & Co., Inc. for their "**DuPont Sentry Glass ® Plus**", expiring on 01/14/12.
2. Notice of Acceptance No. **06–0216.06** issued to Solutia Inc. for their "**Saflex IIIG Clear or colored interlayer**", expiring on 05/21/11.

F. STATEMENTS

1. Statement letter of conformance and letter of no financial interest, prepared by Al Farooq Corporation, dated 02/17/11, signed and sealed by Javad Ahmad, P.E.
2. Statement of Lab compliance and addendum, as part of above test report.

G. OTHER

1. Test proposal # 10-0017, dated 01/06/10 and e-mail test revision dated Oct 06, 2010 approved by BCCO.

Ishaq I. Chanda

Ishaq I. Chanda, P.E.
Product Control Examiner
NOA No 11-0218.05
Expiration Date: April 21, 2016
Approval Date: April 21, 2011

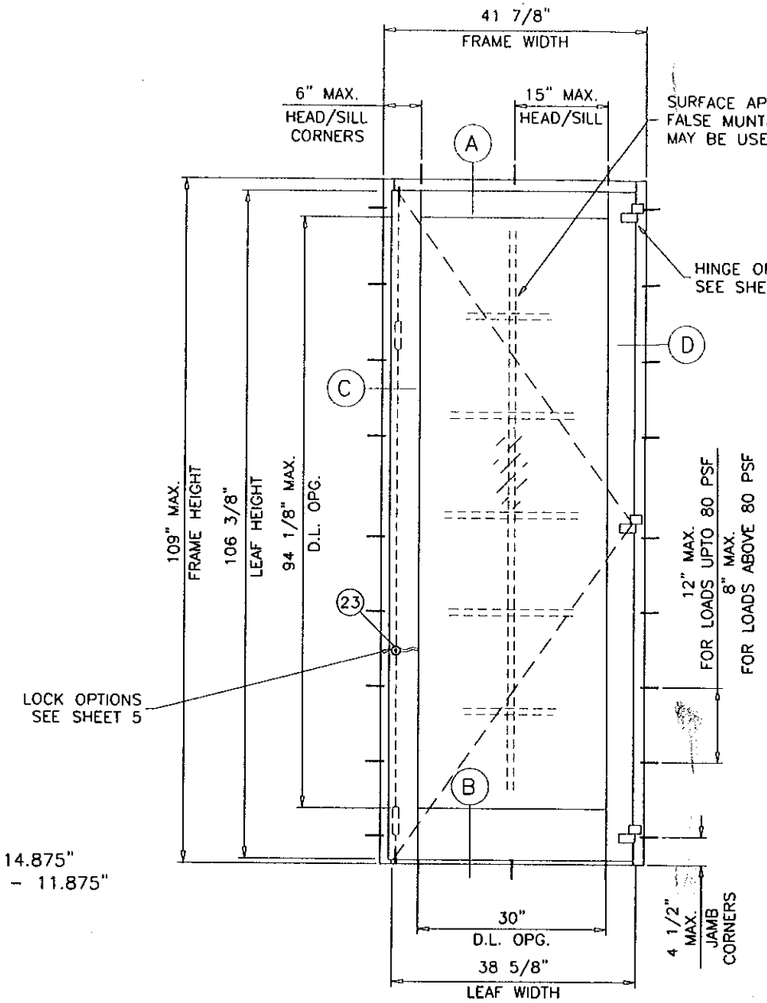

TYPICAL ELEVATION

(X)

SINGLE LEAF DOOR

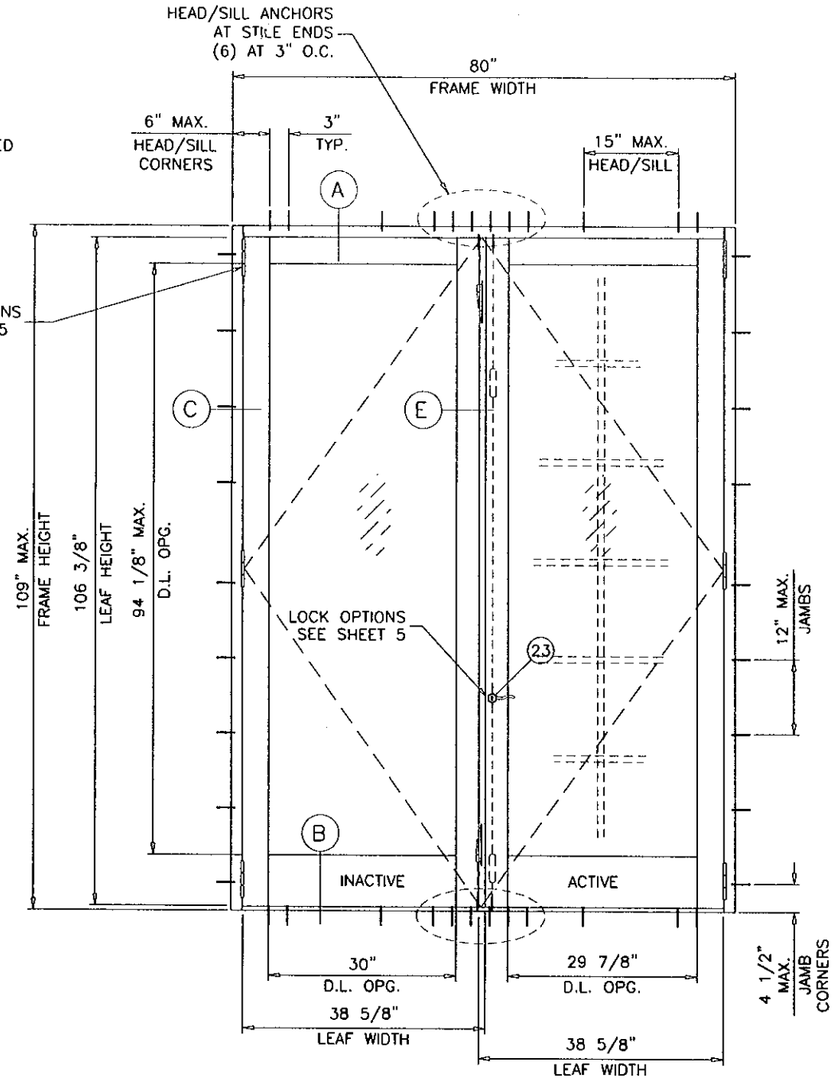

TYPICAL ELEVATION

(XX)

DUAL LEAF DOOR

Approved as complying with the Florida Building Code
Date APR 21 2011
NOA# 11-0218.05
Miami Dade Product Control
By Ishaq I. Chand

DOOR OPTIONS

GLASS D.L.O. DIMS.

D.L.O. HEIGHT (DOOR & SIDELITE) = FRAME HEIGHT – 14.875"
D.L.O. WIDTH (X DOORS & O PANELS) = FRAME WIDTH – 11.875"
D.L.O. WIDTH (XX DOORS) = (FRAME WIDTH – 20")/2

SERIES–249 ALUMINUM FRENCH DOOR W/ SIDELITES

APPROVAL APPLIES TO SINGLE (X) AND DOUBLE (XX) LEAF DOORS WITH OR WITHOUT SIDELITES.
SIDE LITES CAN BE ON ONE OR BOTH SIDES OF DOOR.
SEE SHEET 6 FOR DESIGN LOAD CAPACITIES.

THIS PRODUCT HAS BEEN DESIGNED AND TESTED TO COMPLY WITH THE REQUIREMENTS OF THE FLORIDA BUILDING CODE 2007 EDITION INCLUDING HIGH VELOCITY HURRICANE ZONE (HVHZ).

1BY OR 2BY WOOD BUCKS BY OTHERS, MUST BE ANCHORED PROPERLY TO TRANSFER LOADS TO THE STRUCTURE.

ANCHORS SHALL BE AS LISTED, SPACED AS SHOWN ON DETAILS, ANCHORS EMBEDMENT TO BASE MATERIAL SHALL BE BEYOND WALL DRESSING OR STUCCO.

ANCHORING OR LOADING CONDITIONS NOT SHOWN IN THESE DETAILS ARE NOT PART OF THIS APPROVAL.

A LOAD DURATION INCREASE IS USED IN DESIGN OF ANCHORS INTO WOOD ONLY.

MATERIALS INCLUDING BUT NOT LIMITED TO STEEL/METAL SCREWS, THAT COME INTO CONTACT WITH OTHER DISSIMILAR MATERIALS SHALL MEET THE REQUIREMENTS OF 2007 FLORIDA BLDG. CODE SECTION 2003.8.4.

DOORS/SIDELITES ARE RATED FOR LARGE AND SMALL MISSILE IMPACT. SHUTTERS ARE NOT REQUIRED.

Engr: JAVAD AHMAD
CIVIL
FLA. PE. # 70592
C.A.N. 3538
APR 01 2011

AL-FAROOQ CORPORATION
ENGINEERS & PRODUCT DEVELOPMENT
1235 S.W. 87 AVE
MIAMI, FLORIDA 33174
TEL. (305) 264-8100 FAX. (305) 262-6978
COMP-ANL\W11-03TMW

SERIES-249 ALUM OUT-SWING DOOR W/ SIDELITES (L.M.I.)

TM WINDOW AND DOOR
601 N.W. 12TH AVE.
POMPANO BEACH, FL. 33069
TEL. (954) 781-5078 FAX. (954) 781-4430

revisions:			
no	date	by	description
A	03.24.11		REV. PER BNC COMMENTS

date: 02-10-11
scale: 1/2"=1'-0"
dr. by: HAMID
chk. by:

drawing no.
W11-03

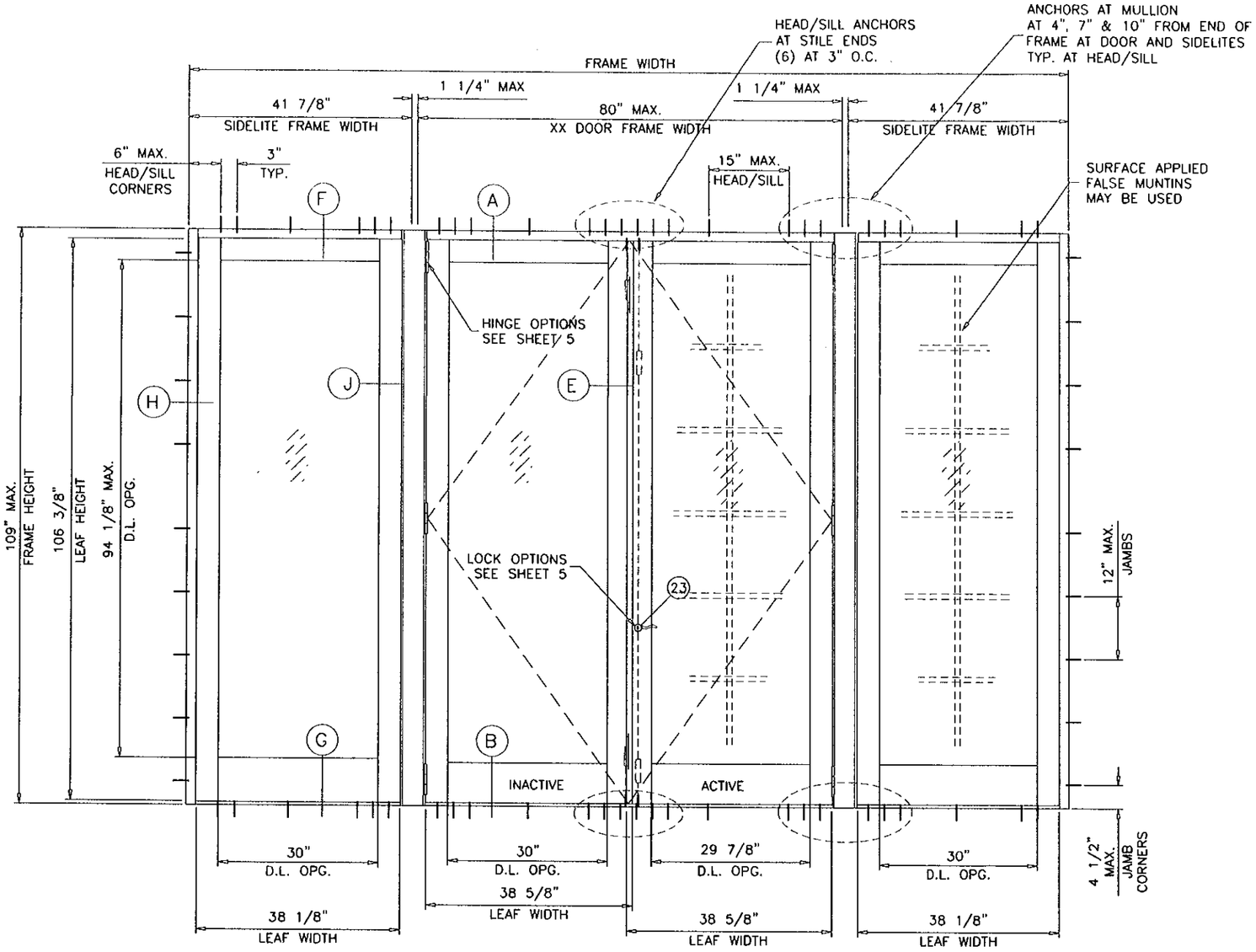

TYPICAL ELEVATION

(OXXO)

WITH PANEL SIDELITES

SIDELITE OPTION

Approved as complying with the
Florida Building Code
Date APR 21, 2011
NOA# 11-0218.05
Miami Dade Product Control
By Ishaq I. Chanda

Engr: JAVAD AHMAD
CIVIL
FLA. PE # 70592
C.A.N. 3538
APR 01 2011

AL-FAROOQ CORPORATION
ENGINEERS & PRODUCT DEVELOPMENT
1235 S.W. 87 AVE
MIAMI, FLORIDA 33174
TEL. (305) 264-8100 FAX. (305) 262-6978
COMP-ANL\W11-03TMW

SERIES-249 ALUM OUT-SWING DOOR W/ SIDELITES (L.M.I.)

TM WINDOW AND DOOR
601 N.W. 12TH AVE.
POMPANO BEACH, FL. 33069
TEL. (954) 781-4430 FAX. (954) 781-5078

revisions:			
no.	date	by	description
A	03.24.11		REV. PER BNC COMMENTS

date: 02-10-11
scale: 1/2"=1'-0"
dr. by: HAMID
chk. by:

drawing no.
W11-03

sheet 2 of 16

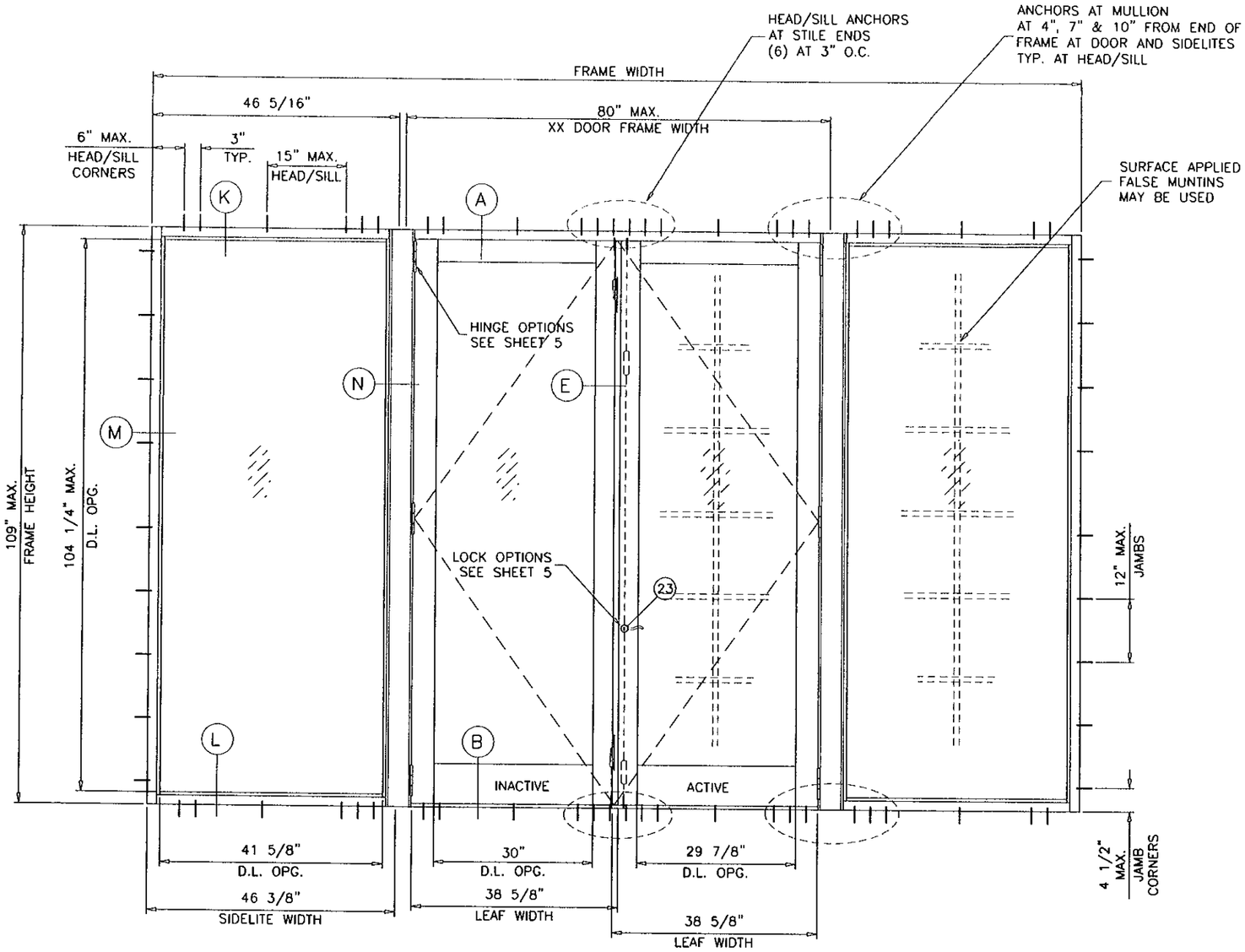

TYPICAL ELEVATION

(OXXO)

WITH DIRECT SET SIDELITES

SIDELITE OPTION

Approved as complying with the
Florida Building Code
Date APR 21 2011
NOA# 11-0218.05
Miami Dade Product Control
By Ishwar L. Chand

Engr: JAVAD AHMAD
CIVIL
FLA. PE # 70592
C.A.N. 3538

APR 01 2011

AL-FAROOQ CORPORATION
ENGINEERS & PRODUCT DEVELOPMENT
1235 S.W. 87 AVE
MIAMI, FLORIDA 33174
TEL. (305) 264-8100 FAX. (305) 262-6978

COMP-ANL\W11-03TMW

SERIES-249 ALUM OUT-SWING DOOR W/ SIDELITES (L.M.I.)

TM WINDOW AND DOOR
601 N.W. 12TH AVE.
POMPANO BEACH, FL. 33069
TEL. (954) 781-5078 FAX. (954) 781-4430

revisions:

no	date	by	description
A	03.24.11		REV. PER BNC COMMENTS

date: 02-10-11
scale: 1/2"=1'-0"
dr. by: HAMID
chk. by:

drawing no.
W11-03

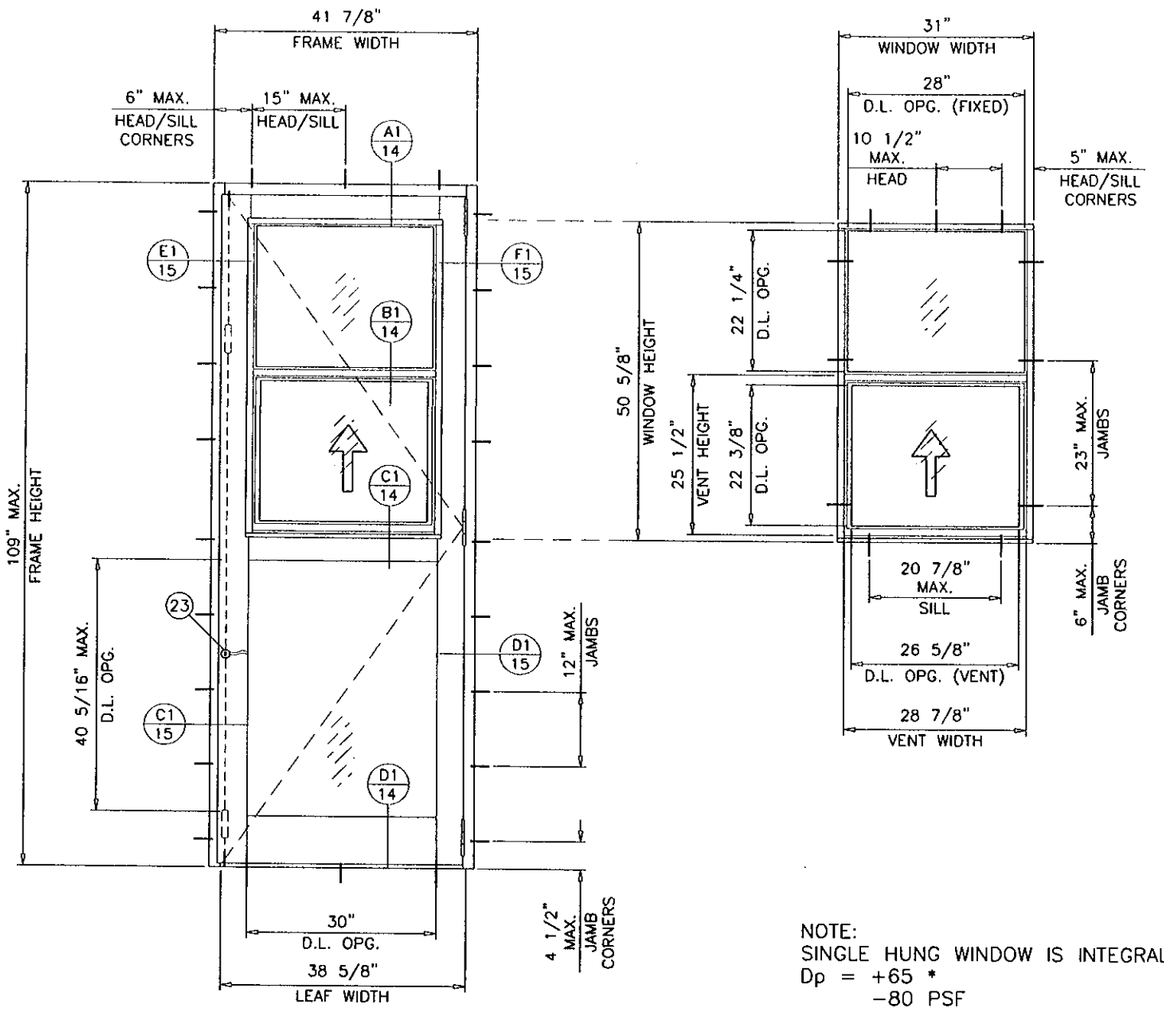

TYPICAL ELEVATION

(X)

FOR DESIGN LOAD CAPACITY SEE SHEET 5

SINGLE LEAF DOOR WITH SINGLE HUNG WDW. INSERT

S.H. WINDOW INSERT OPTION

NOTE:
SINGLE HUNG WINDOW IS INTEGRAL PART OF THE SINGLE DOOR.
Dp = +65 *
−80 PSF
* EXT.(+) Dp WITH HIGH THRESHOLD, LIMITED TO +58 PSF WITH STD. THRESHOLD

Approved as complying with the
Florida Building Code
Date APR 21, 2011
NOA# 11-0218.05
Miami Dade Product Control
By Ishwar L. Chand

Engr: JAVAD AHMAD
CIVIL
FLA. PE # 70592
C.A.N. 3538

APR 01 2011

AL-FAROOQ CORPORATION
ENGINEERS & PRODUCT DEVELOPMENT
1235 S.W. 87 AVE
MIAMI, FLORIDA 33174
TEL. (305) 264-8100 FAX. (305) 262-6978
COMP-ANL\W11-03TMW

SERIES-249 ALUM. OUT-SWING DOOR W/ SIDELITES (L.M.I.)

TM WINDOW AND DOOR
601 N.W. 12TH AVE.
POMPANO BEACH, FL. 33069
TEL. (954) 781-4430 FAX. (954) 781-5078

revisions:

no	date	by	description
A	03.24.11		REV. PER BNC COMMENTS

date: 02-10-11
scale: 1/2"=1'-0"
dr. by: HAMID
chk. by:

drawing no.
W11-03

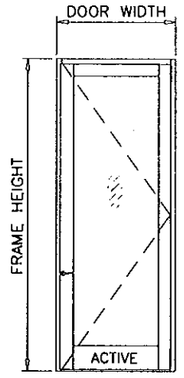

(X)

SINGLE LEAF (X) DOORS WITHOUT SIDELITES					
DESIGN LOAD CAPACITY – PSF					
FRAME WIDTH INCHES	FRAME HEIGHT INCHES	GLASS TYPES 'A' OR 'A1'		GLASS TYPES 'B' OR 'B1'	
		EXT.(+)	INT.(–)	EXT.(+)	INT.(–)
42	109	80.0	80.0	100.0	141.0

EXT.(+) LOADS SHOWN ABOVE ARE WITH HIGH THRESHOLD
FOR STD. THRESHOLD LIMIT EXT.(+) LOADS TO 58.0 PSF

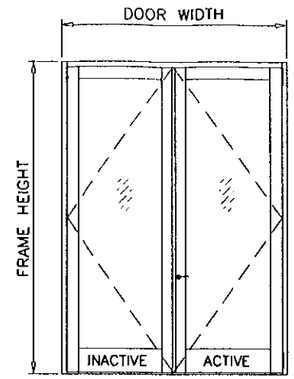

(XX)

DOUBLE LEAF (XX) DOORS WITHOUT SIDELITES			
DESIGN LOAD CAPACITY – PSF			
FRAME WIDTH INCHES	FRAME HEIGHT INCHES	GLASS TYPES 'A', 'A1', 'B' OR 'B1'	
		EXT.(+)	INT.(–)
80	109	80.0	80.0

EXT.(+) LOADS SHOWN ABOVE ARE WITH HIGH THRESHOLD
FOR STD. THRESHOLD LIMIT EXT.(+) LOADS TO 58.0 PSF

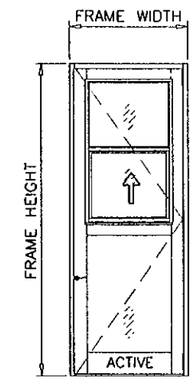

SINGLE LEAF (X) DOORS WITH S.H. INSERT			
DESIGN LOAD CAPACITY – PSF			
FRAME WIDTH INCHES	FRAME HEIGHT INCHES	GLASS TYPES @ DOOR 'A', 'A1', 'B' OR 'B1'	
		EXT.(+)	INT.(–)
42	109	65.0	80.0
		GLASS TYPE 'F' @ S.H. WDW.	

EXT.(+) LOADS SHOWN ABOVE ARE WITH HIGH THRESHOLD
FOR STD. THRESHOLD LIMIT EXT.(+) LOADS TO 58.0 PSF

LOCKS:

OPTION #1

STANDARD STEEL THROW BOLT LOCK, KEY OPERATED ON EXTERIOR AND THUMB TURN ON INTERIOR AT EACH ACTIVE LEAF LOCK STILE, 48" FROM BOTTOM

CONVENTIONAL LOCKSET WITH KNOB, KEY OPERATED ON EXTERIOR AND THUMB TURN ON INTERIOR AT EACH ACTIVE LEAF LOCK STILE, 39-1/2" FROM BOTTOM

MANUALLY OPERATED CONCEALED FLUSH BOLTS AT TOP & BOTTOM OF EACH LEAF LOCK STILE (4) AT DOUBLE(XX) DOORS, (2) AT SINGLE(X) DOORS

OPTION #2

MULTI-POINT LOCK SYSTEM WITH LEVER HANDLE LOCATED AT 40-1/2" FROM BOTTOM OF ACTIVE LEAF LOCK STILE FASTENED WITH (2) #12-28 X 2-1/4" OH MS

METALLIC STRIKE PLATE AT 40" FROM BOTTOM OF INACTIVE LEAF LOCK STILE FASTENED WITH (3) #10 X 1/2" FH SMS

MANUALLY OPERATED CONCEALED FLUSH BOLTS AT TOP & BOTTOM OF INACTIVE LEAF LOCK STILE OPERATORS AT 10-1/2" & 76-1/2" FROM BOTTOM FASTENED WITH (2) #8-32 X 1/2" FH MS

(FLUSH BOLTS AT TOP & BOTTOM OF ACTIVE AND INACTIVE LEAFS TO BE ENGAGED DURING PERIODS OF HURRICANE WARNING)

HINGES:

OPTION #1

7-5/8" LONG ALUM BUTT HINGES, AT 11" FROM EACH END AND ONE AT MIDSPAN OF LEAF.

OPTION #2

3-1/4" LONG ALUM PIVOT HINGES, AT 11" FROM EACH END AND ONE AT MIDSPAN OF LEAF.
FASTENED TO FRAME WITH (2) 1/4-20 X 1-1/2" MS
FASTENED TO PANEL WITH (2) 5/16-18 X 1-1/2" MS

SEALANTS:

FRAME CORNERS AND GLAZING BEAD TO PANEL SEALED WITH WHITE COLORED SEALANT.
SEAMS BETWEEN MULLION AND JAMBS SEALED WITH SILICONE.

Approved as complying with the Florida Building Code
Date APR 21, 2011
NOA# 11-0218.05
Miami Dade Product Control
By [illegible]

NOTE:
GLASS CAPACITIES ON THIS SHEET ARE BASED ON ASTM E1300-04 (3 SEC. GUSTS) AND FLORIDA BUILDING COMMISSION DECLARATORY STATEMENT DCA05-DEC-219

Engr: JAVAD AHMAD
CIVIL
FLA. PE # 70592
C.A.N. 3538
APR 01 2011

AL-FAROOQ CORPORATION
ENGINEERS & PRODUCT DEVELOPMENT
1235 S.W. 87 AVE
MIAMI, FLORIDA 33174
TEL. (305) 264-8100 FAX. (305) 262-6978
COMP-ANL\W11-03TMW

SERIES-249 ALUM OUT-SWING DOOR W/ SIDELITES (L.M.I.)

TM WINDOW AND DOOR
601 N.W. 12TH AVE.
POMPANO BEACH, FL. 33069
TEL. (954) 781-4430 FAX. (954) 781-5078

revisions:

no	date	by	description
A	03.24.11		REV. PER BNC COMMENTS

date: 02-10-11
scale: 3/8" = 1"
dr. by: HAMID
chk. by:

drawing no.
W11-03

STATIONARY PANEL (0) OR DOORS WITH SIDELITES				
DESIGN LOAD CAPACITY – PSF				
FRAME HEIGHT INCHES	DOOR WIDTH INCHES	PANEL/DIRECT SET SIDELITE WIDTH INCHES	GLASS TYPES 'A', 'A1', 'B' OR 'B1'	
			EXT. (+)	INT. (–)
81	41 7/8 (X) 80 (XX)	48	80.0	69.7
85	41 7/8 (X) 80 (XX)	48	80.0	69.7
91	41 7/8 (X) 80 (XX)	48	80.0	69.7
97	41 7/8 (X) 80 (XX)	42	80.0	79.6
103	41 7/8 (X) 80 (XX)	42	80.0	79.6
109	41 7/8 (X) 80 (XX)	41 7/8	80.0	80.0

EXT.(+) LOADS SHOWN ABOVE ARE WITH HIGH THRESHOLD
FOR STD. THRESHOLD LIMIT EXT.(+) LOADS TO 58.0 PSF

NOTE:
FOR DOORS CAPACITIES SEE SHEET 5.
FOR SIDELITE CAPACITIES SEE CHART ABOVE.
LOWER VALUES FROM DOOR OR SIDELITE CHART
WILL APPLY TO ENTIRE SYSTEM.

NOTE:
GLASS CAPACITIES ON THIS SHEET ARE
BASED ON ASTM E1300-04 (3 SEC. GUSTS)
AND FLORIDA BUILDING COMMISSION
DECLARATORY STATEMENT DCA05-DEC-219

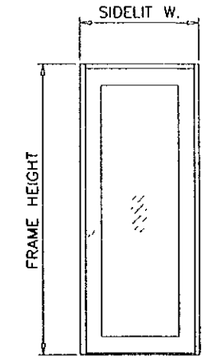

STATIONARY (O)

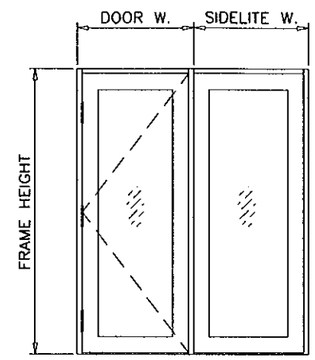

(XO)
(OX)

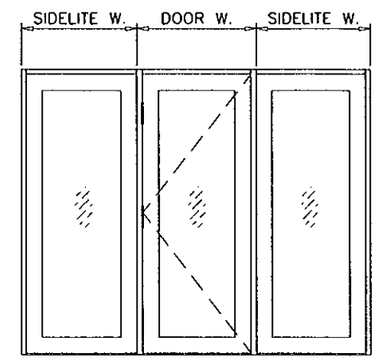

(OXO)

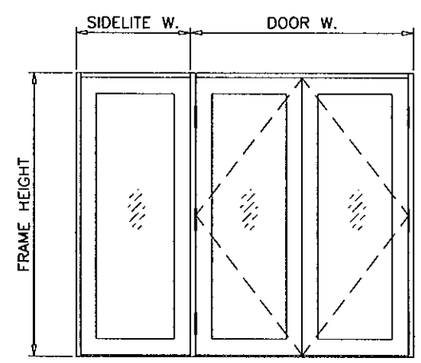

(OXX)
(XXO)

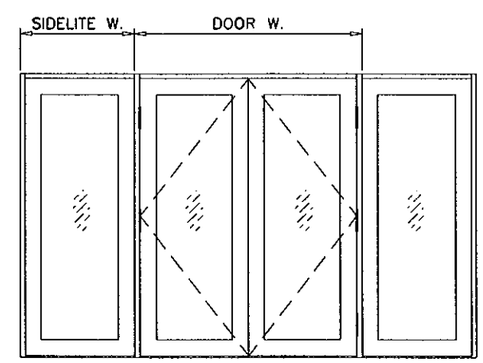

(OXXO)

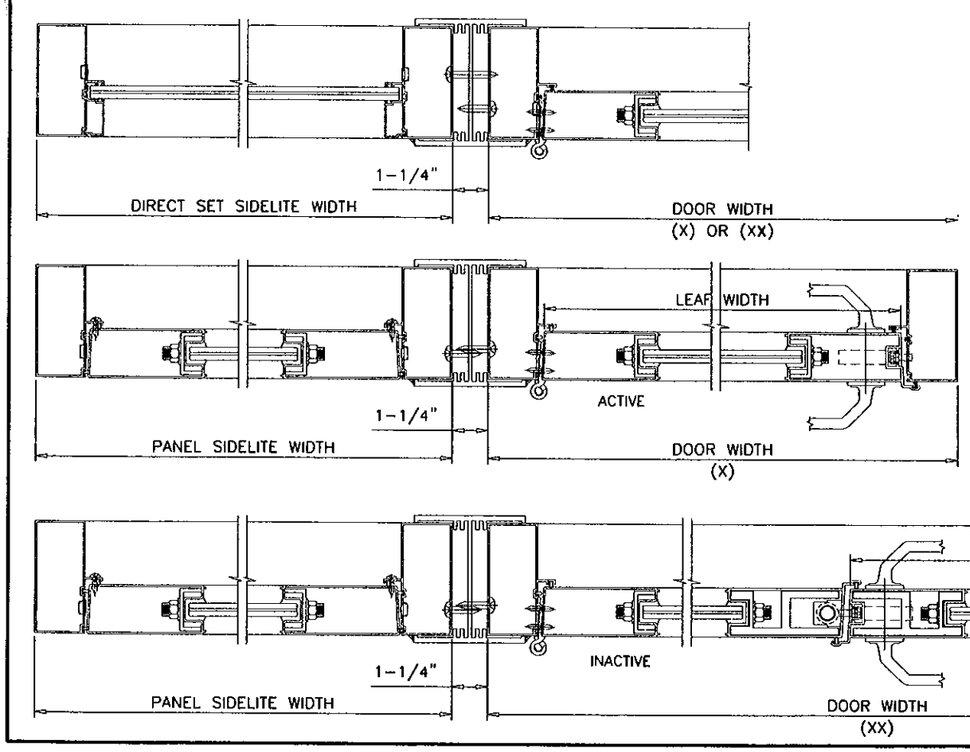

Approved as complying with the
Florida Building Code
Date APR 21 2011
NOA# 11-0218.05
Miami Dade Product Control
By

Engr: JAVAD AHMAD
CIVIL
FLA. PE # 70592
C.A.N. 3538

APR 01 2011

AL-FAROOQ CORPORATION
ENGINEERS & PRODUCT DEVELOPMENT
1235 S.W. 87 AVE
MIAMI, FLORIDA 33174
TEL. (305) 264-8100 FAX. (305) 262-6978
COMP-ANL\W11-03TMW

SERIES-249 ALUM OUT-SWING DOOR W/ SIDELITES (L.M.I.)

TM WINDOW AND DOOR
601 N.W. 12TH AVE.
POMPANO BEACH, FL. 33069
TEL. (954) 781-4430 FAX. (954) 781-5078

revisions:

no	date	by	description
A	03.24.11		REV. PER BNC COMMENTS

date: 02-10-11
scale: 3/8" = 1"
dr. by: HAMID
chk. by:

drawing no.
W11-03

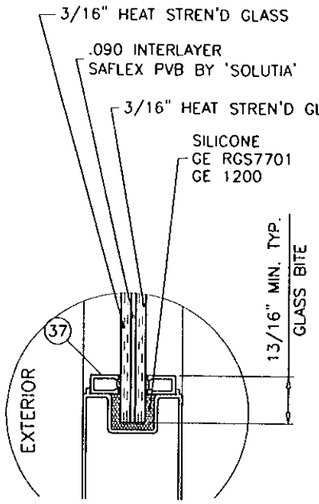

GLASS TYPE 'A'

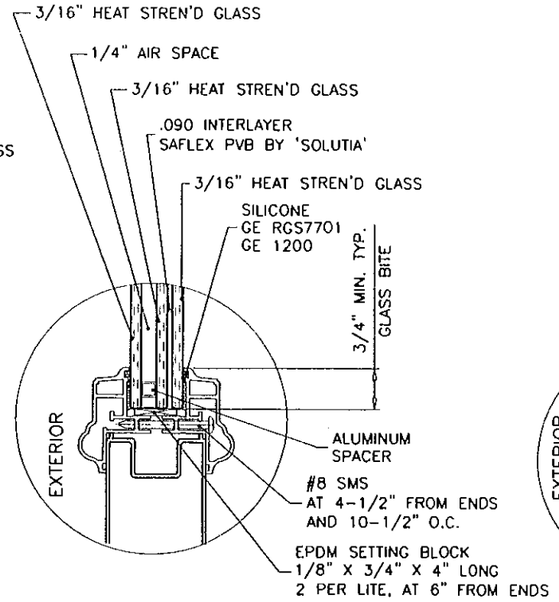

GLASS TYPE 'A1'

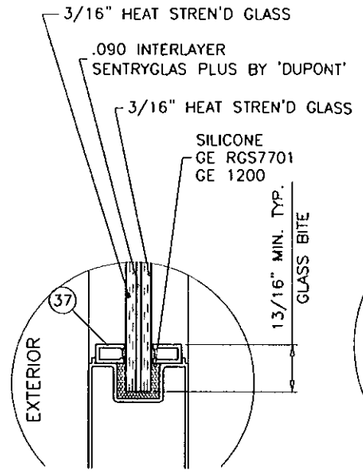

GLASS TYPE 'B'

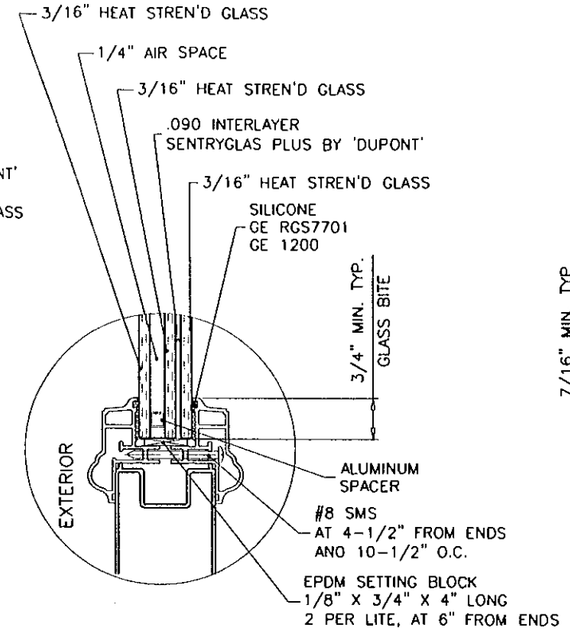

GLASS TYPE 'B1'

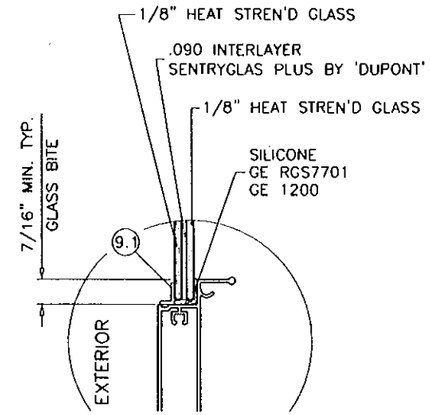

GLASS TYPE 'F'

(S.H. WINDOW WITH SINGLE DOOR APPLICATION ONLY)

GLAZING OPTIONS

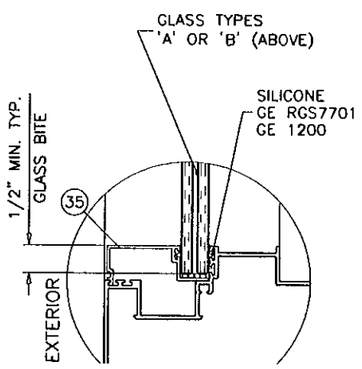

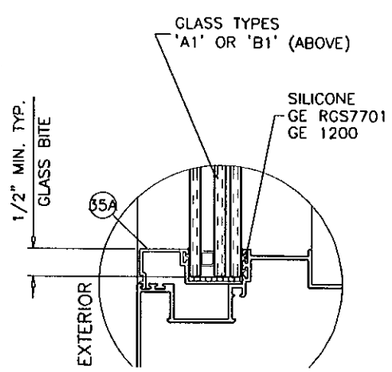

GLAZING DETAILS AT SIDELITE

Approved as complying with the Florida Buiding Code
Date APR 21, 2011
NOA# 11-0218.05
Miami Dade Product Control
By Ishaq I. Chanda

Engr: JAVAD AHMAD
CIVIL
FLA. PE # 70592
C.A.N. 3538
APR 01 2011

AL-FAROOQ CORPORATION
ENGINEERS & PRODUCT DEVELOPMENT
1235 S.W. 87 AVE
MIAMI, FLORIDA 33174
TEL. (305) 264-8100 FAX. (305) 262-6978
COMP-ANL\W11-03TMW

SERIES-249 ALUM OUT-SWING DOOR W/ SIDELITES (L.M.I.)

TM WINDOW AND DOOR
601 N.W. 12TH AVE.
POMPANO BEACH, FL. 33069
TEL. (954) 781-4430 FAX. (954) 781-5078

revisions:

no	date	by	description
A	03.24.11		REV. PER BNC COMMENTS

date: 02-10-11
scale: 3/8" = 1"
dr. by: HAMID
chk. by:

drawing no.
W11-03

sheet 7 of 16

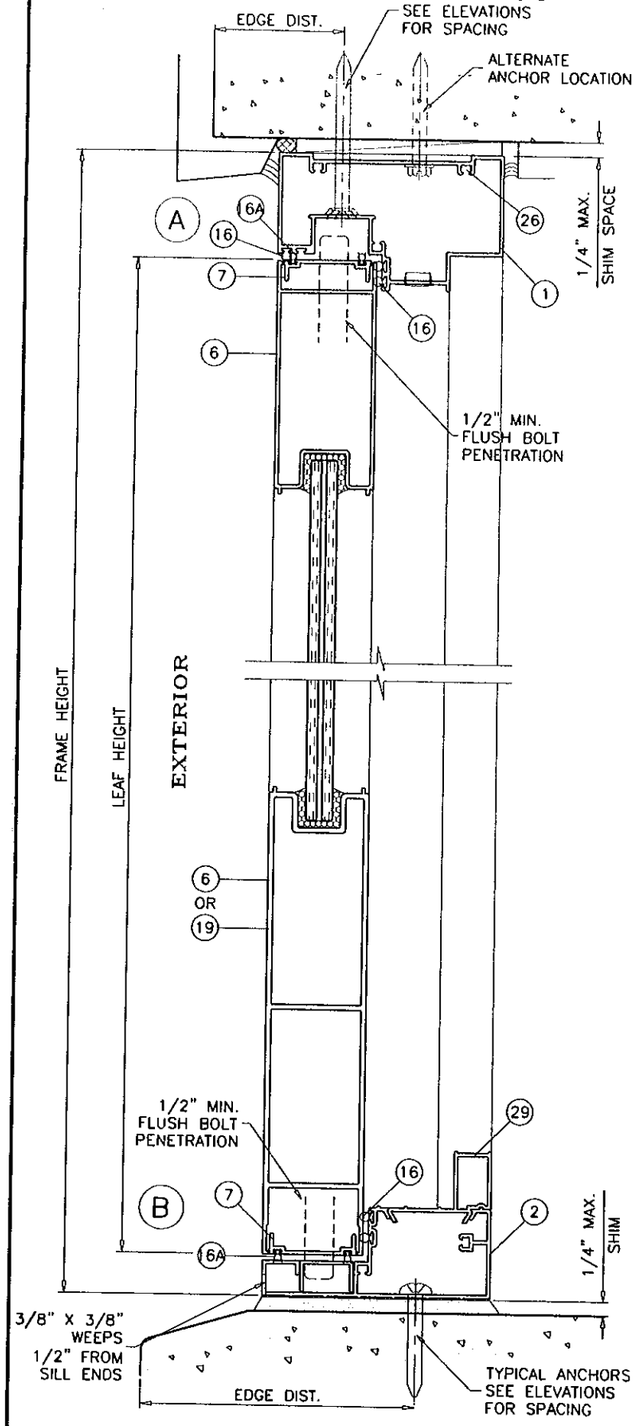

HIGH THRESHOLD

APPR'D FOR WATER RESISTANCE

LIMIT MAX. EXT(+) LOADS TO 100.0 PSF (SINGLE DOOR)

LIMIT MAX. EXT(+) LOADS TO 80.0 PSF (DOUBLE DOOR)

OPERATING UNITS

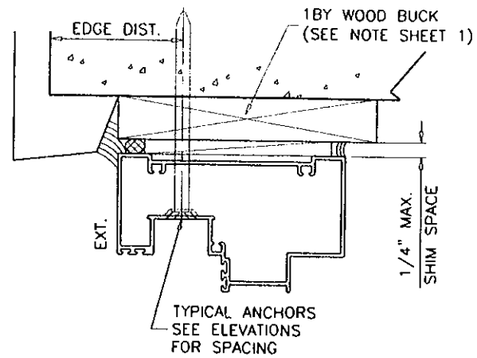

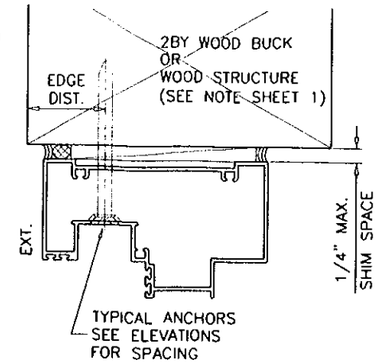

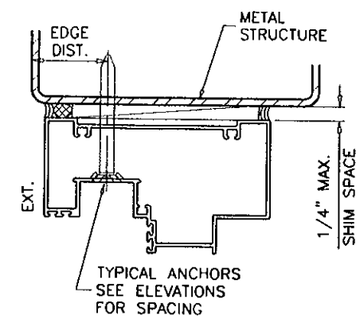

WOOD BUCKS AND METAL STRUCTURE NOT BY TM WINDOWS MUST SUSTAIN LOADS IMPOSED BY GLAZING SYSTEM AND TRANSFER THEM TO THE BUILDING STRUCTURE.

TYPICAL ANCHORS: SEE ELEV. FOR SPACING

1/4" DIA. ULTRACON BY 'ELCO' (Fu=177 KSI, Fy=155 KSI)

INTO 2BY WOOD BUCKS OR WOOD STRUCTURES
1-1/2" MIN. PENETRATION INTO WOOD

THRU 1BY BUCKS INTO CONC. OR MASONRY
1-1/4" MIN. EMBED INTO CONC. OR MASONRY

DIRECTLY INTO CONC. OR MASONRY
1-1/4" MIN. EMBED INTO CONC. OR MASONRY

1/4" DIA. SELF DRILLING SCREWS (GRADE 5 CRS)

INTO MIAMI-DADE COUNTY APPROVED MULLIONS (MIN. THK. = 1/8")

INTO METAL STRUCTURES
STEEL : 1/8. THK. MIN. (Fy = 36 KSI MIN.)
ALUMINUM : 1/8" THK. MIN. (6063-T5 MIN.)
(STEEL IN CONTACT WITH ALUMINUM TO BE PLATED OR PAINTED)

TYPICAL EDGE DISTANCE

INTO CONCRETE AND MASONRY = 2" MIN.
INTO WOOD STRUCTURE = 1" MIN.
INTO METAL STRUCTURE = 3/4" MIN.

CONCRETE AT HEAD, SILL OR JAMBS f'c = 3000 PSI MIN.
C-90 HOLLOW/FILLED BLOCK AT JAMBS f'm = 2000 PSI MIN.

Approved as complying with the Florida Building Code
Date APR 21, 2011
NOA# 11-0219.05
Miami Dade Product Control
By Shag Chand

OPERATING UNITS

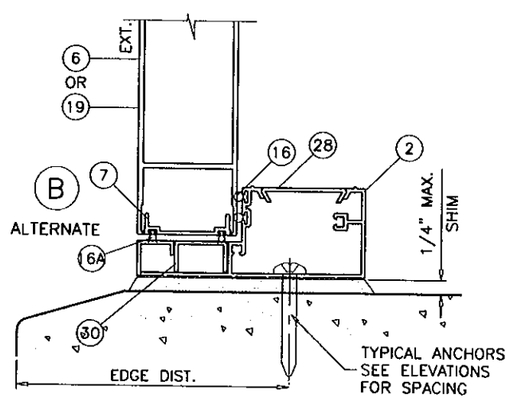

STANDARD THRESHOLD

APPR'D FOR WATER RESISTANCE

LIMIT MAX. EXT(+) LOADS TO 58.0 PSF

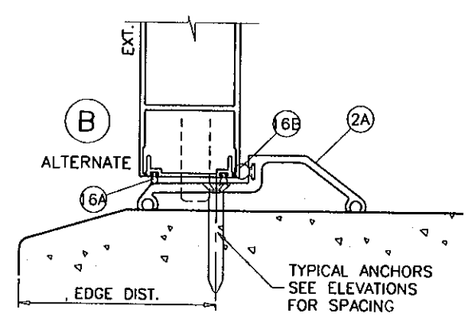

LOW THRESHOLD

NOT APPR'D FOR WATER RESISTANCE

Engr: JAVAD AHMAD
CIVIL
FLA. PE # 70592
C.A.N. 3538
APR 21 2011

AL-FAROOQ CORPORATION
ENGINEERS & PRODUCT DEVELOPMENT
1235 S.W. 87 AVE
MIAMI, FLORIDA 33174
TEL. (305) 264-8100 FAX. (305) 262-6978

COMP-ANL\W11-031MW

SERIES-249 ALUM OUT-SWING DOOR W/ SIDELITES (L.M.I.)

TM WINDOW AND DOOR
601 N.W. 12TH AVE.
POMPANO BEACH, FL. 33069
TEL. (954) 781-4430 FAX. (954) 781-5078

revisions:

no	date	by	description
A	03.24.11		REV. PER BNC COMMENTS

date: 02-10-11
scale: 3/8" = 1"
dr. by: HAMID
chk. by:

drawing no. W11-03

sheet 8 of 16

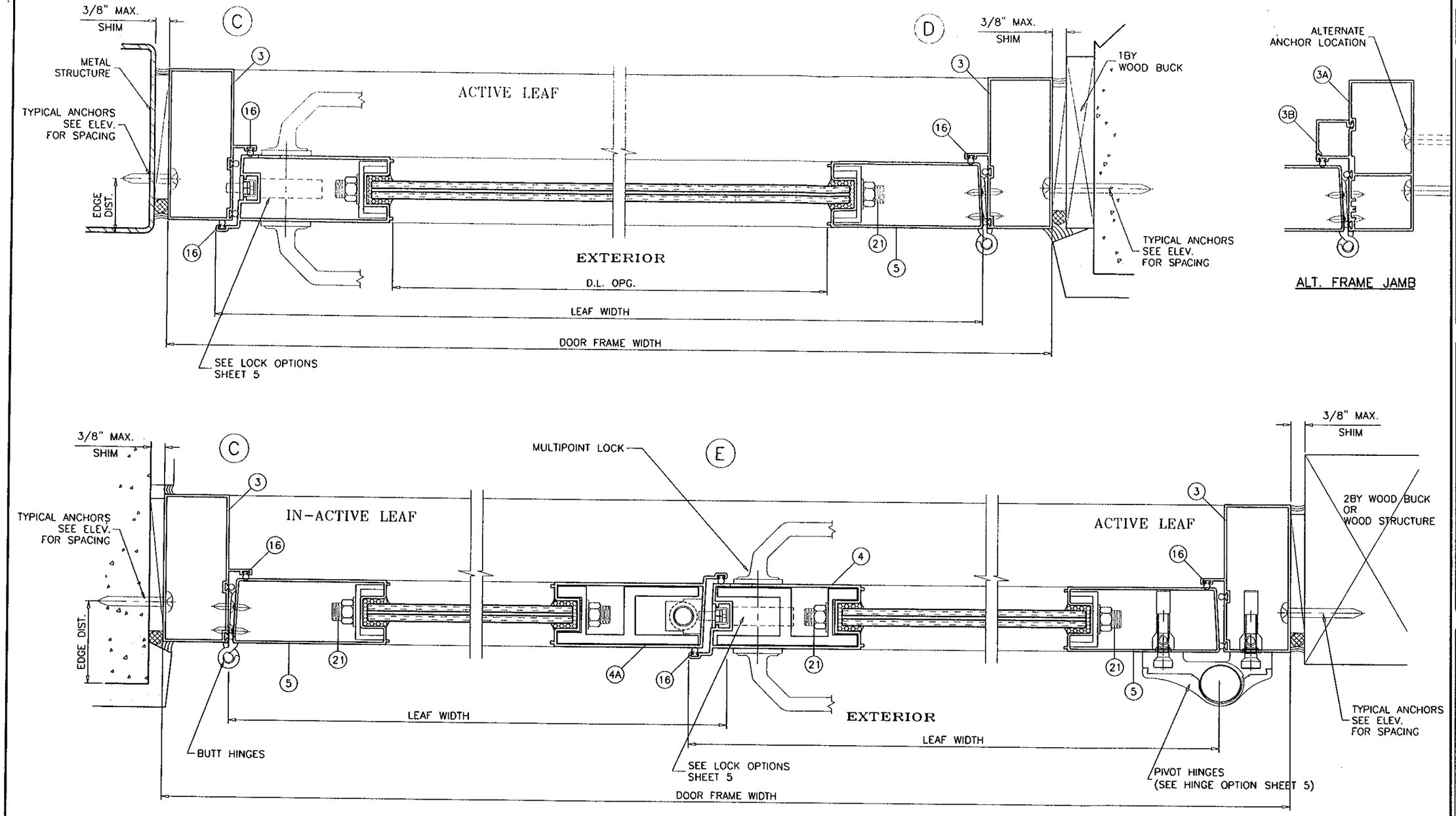

OPERATING UNITS

Approved as complying with the Florida Building Code
Date APR 21 2011
NOA# 11-0219.05
Miami Dade Product Control
By Ishaq I. Ghande

Engr: JAVAD AHMAD
CIVIL
FLA. PE # 70592
C.A.N. 3538
APR 11 2011

AL-FAROOQ CORPORATION
ENGINEERS & PRODUCT DEVELOPMENT
1235 S.W. 87 AVE
MIAMI, FLORIDA 33174
TEL. (305) 264-8100 FAX. (305) 262-6978
COMP-ANL\W11-03TMW

SERIES-249 ALUM OUT-SWING DOOR W/ SIDELITES (L.M.I.)

TM WINDOW AND DOOR
601 N.W. 12TH AVE.
POMPANO BEACH, FL. 33069
TEL. (954) 781-4430 FAX. (954) 781-5078

revisions:

no	date	by	description
A	03.24.11		REV. PER BNC COMMENTS

date: 02-10-11
scale: 3/8" = 1"
dr. by: HAMID
chk. by:

drawing no.
W11-03

sheet 9 of 16

PANEL SIDELITE INSTALLATION DETAILS

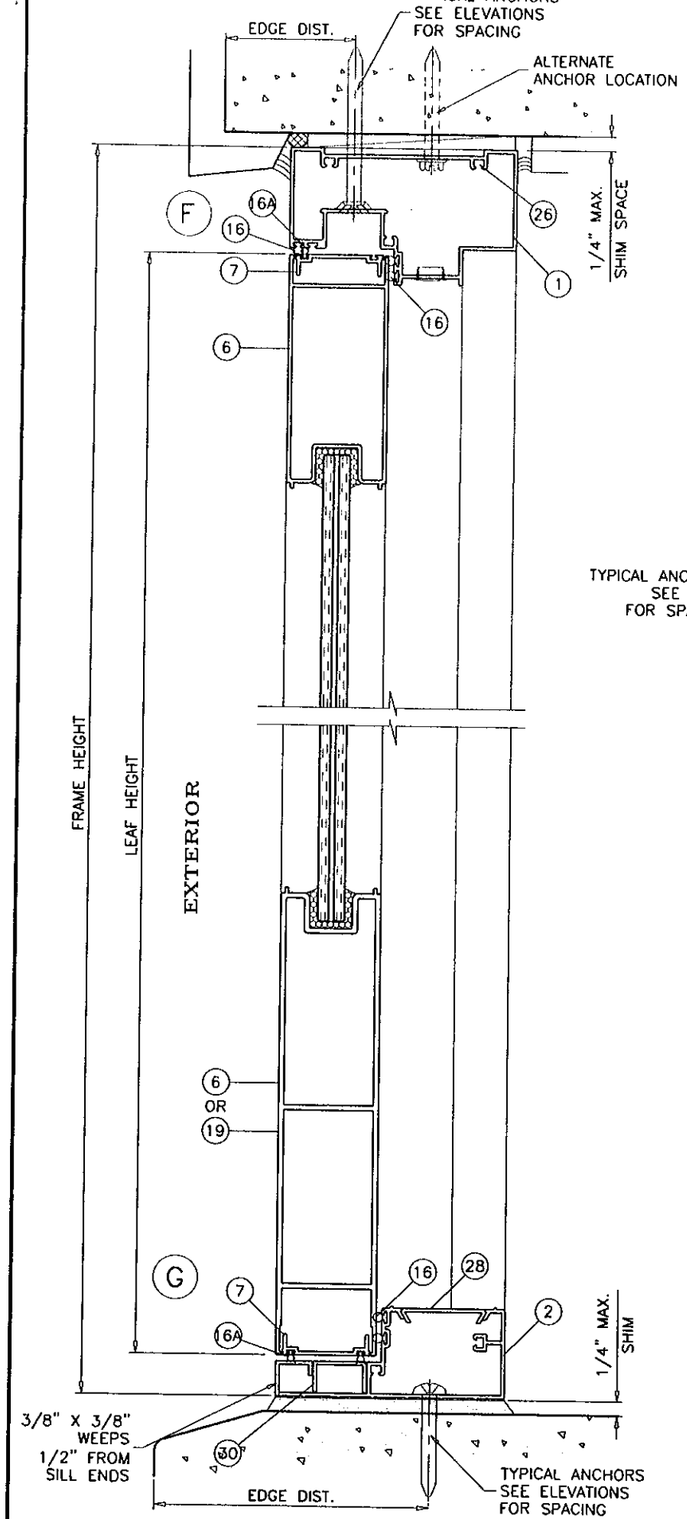

PANEL SIDELITE UNIT (STD. THRESHOLD)

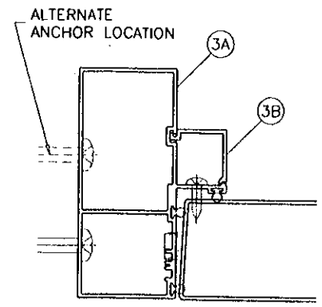

ALT. FRAME JAMB

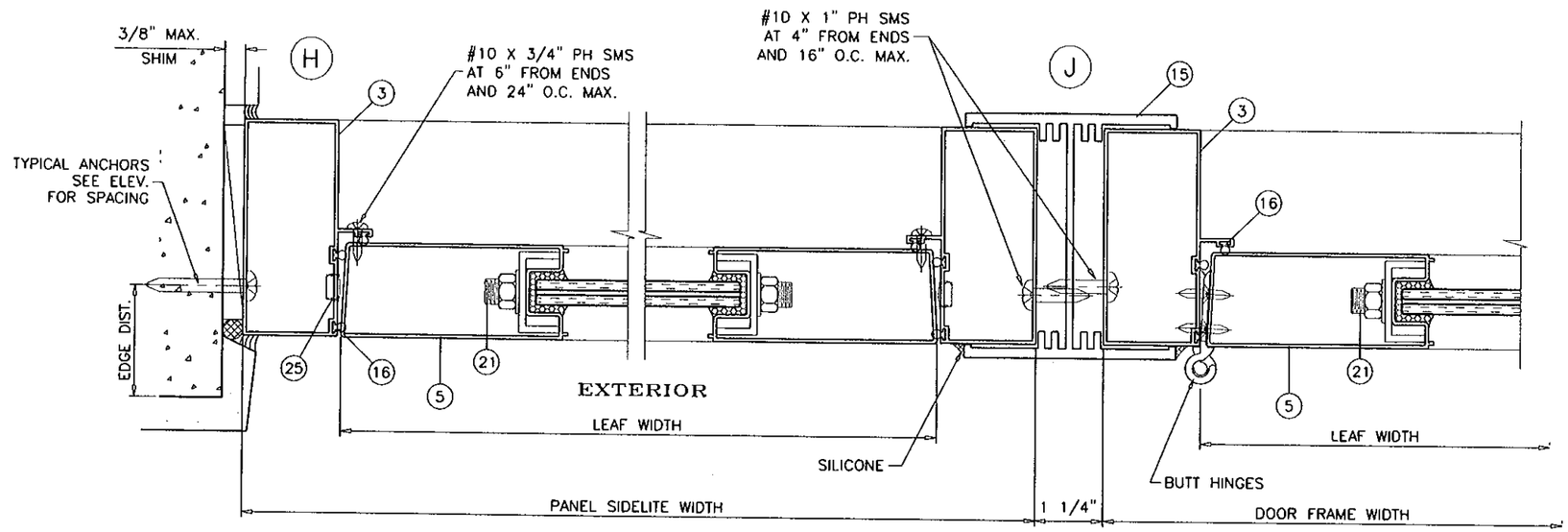

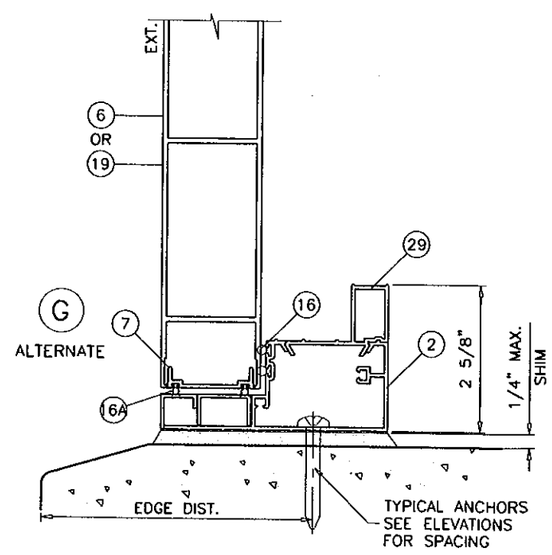

PANEL SIDELITE UNIT (HIGH THRESHOLD)

Approved as complying with the Florida Building Code
Date APR 21 2011
NOA# 11-0219.05
Miami Dade Product Control
By Shaq I. Chanda

PANEL SIDELITE UNITS

Engr: JAVAD AHMAD
CIVIL
FLA. PE # 70592
C.A.N. 3538
APR 01 2011

AL-FAROOQ CORPORATION
ENGINEERS & PRODUCT DEVELOPMENT
1235 S.W. 87 AVE
MIAMI, FLORIDA 33174
TEL. (305) 264-8100 FAX. (305) 262-6978
COMP-ANL\W11-03TMW

SERIES-249 ALUM OUT-SWING DOOR W/ SIDELITES (L.M.I.)

TM WINDOW AND DOOR
601 N.W. 12TH AVE.
POMPANO BEACH, FL. 33069
TEL. (954) 781-4430 FAX. (954) 781-5078

revisions:

no	date	by	description
A	03.24.11		REV. PER BNC COMMENTS

date: 02-10-11
scale: 3/8" = 1"
dr. by: HAMID
chk. by:

drawing no. W11-03

DIRECT SET SIDELITE INSTALLATION DETAILS

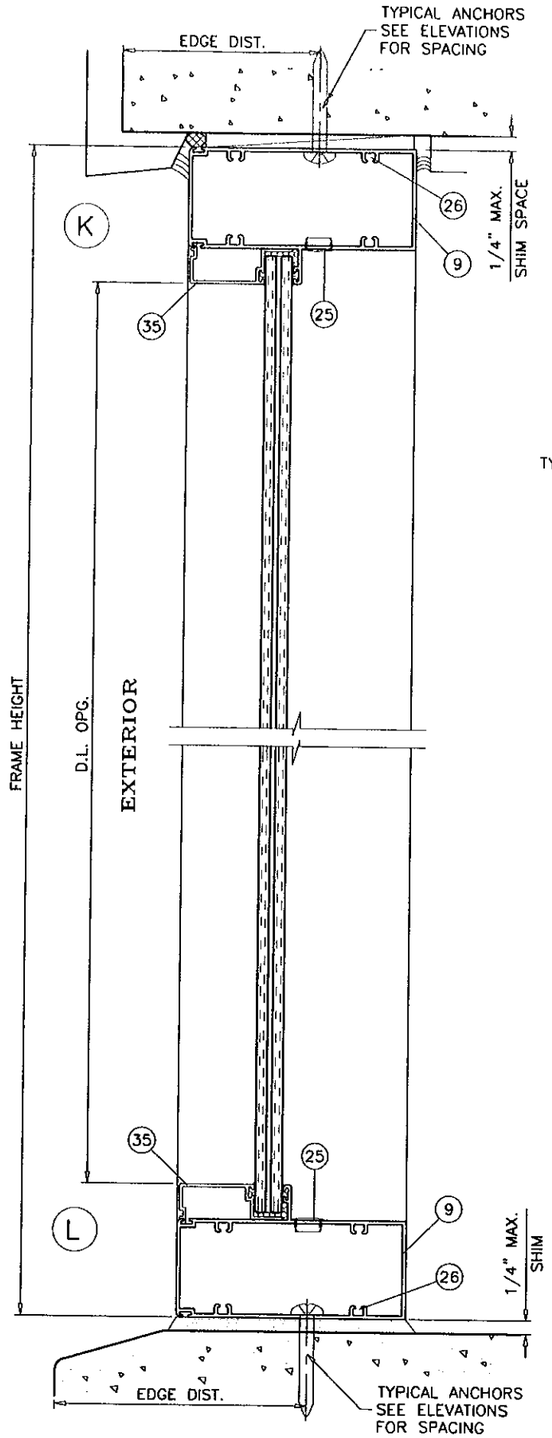

DIRECT SET SIDELITE UNITS

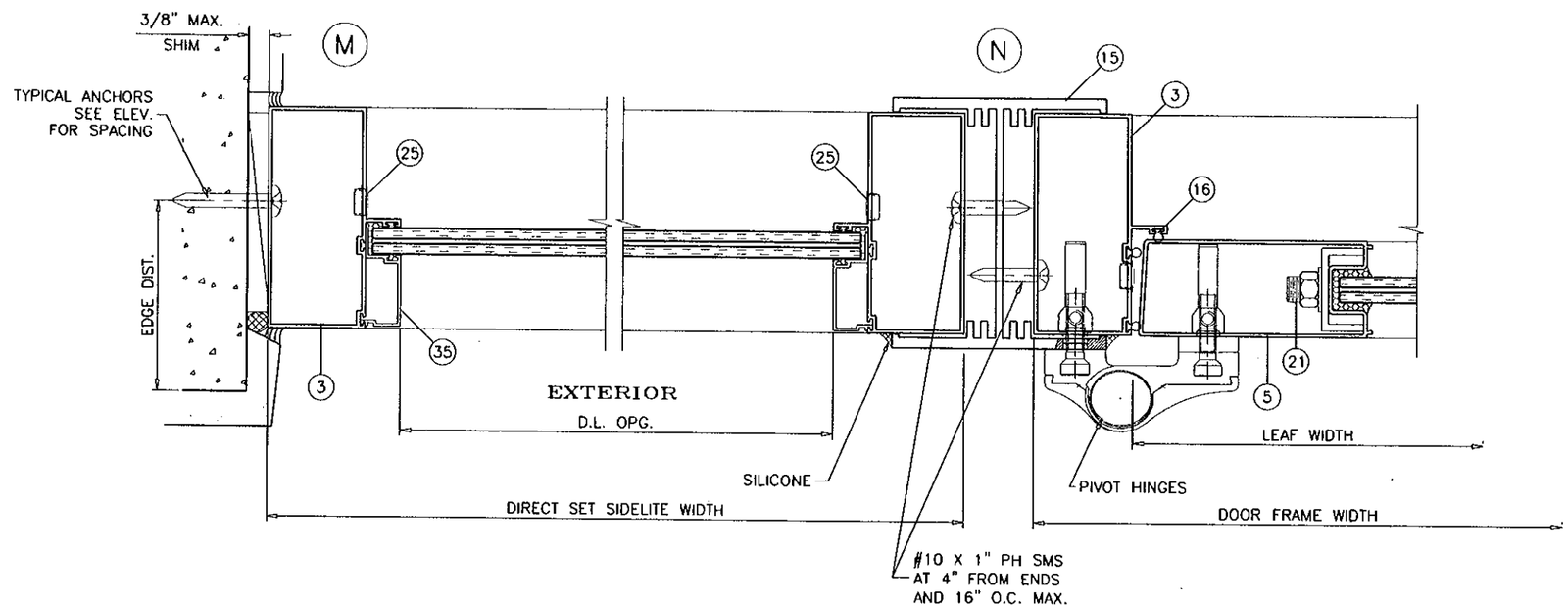

Approved as complying with the Florida Building Code
Date APR 21, 2011
NOA# 11-0218.05
Miami Dade Product Control
By Ishaq I. Ehand

DIRECT SET SIDELITE UNITS

Engr: JAVAD AHMAD
CIVIL
FLA. PE # 70592
C.A.N. 3538
APR 01 2011

AL-FAROOQ CORPORATION
ENGINEERS & PRODUCT DEVELOPMENT
1235 S.W. 87 AVE
MIAMI, FLORIDA 33174
TEL. (305) 264-8100 FAX. (305) 262-6978
COMP-ANL\W11-03TMW

SERIES-249 ALUM OUT-SWING DOOR W/ SIDELITES (L.M.I.)

TM WINDOW AND DOOR
601 N.W. 12TH AVE.
POMPANO BEACH, FL. 33069
TEL. (954) 781-4430 FAX. (954) 781-5078

revisions:

no	date	by	description
A	03.24.11		REV. PER BNC COMMENTS

date: 02-10-11
scale: 3/8" = 1"
dr. by: HAMID
chk. by:

drawing no.
W11-03

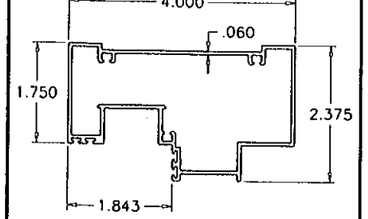

(1) FRAME HEAD
TM-099

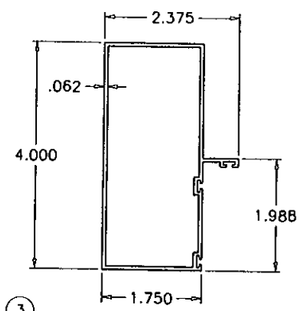

(3) DOOR JAMB/SIDELITE FRAME
BA5499

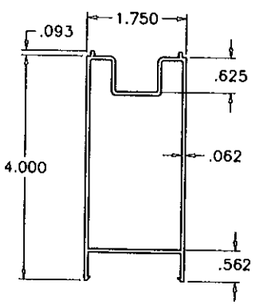

(6) DOOR TOP/BOTTOM RAIL
TM-32994

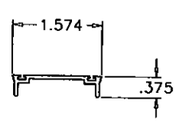

(7) WEATHER-STRIP ADAPTER
GW-31826

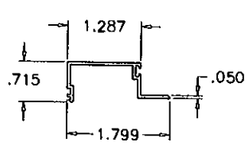

(35) SIDELITE GLAZING BEAD (LAM. GLASS)
TM-157

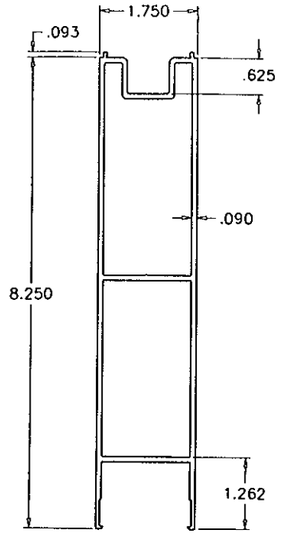

(19) DOOR BOTTOM RAIL
TM-29236

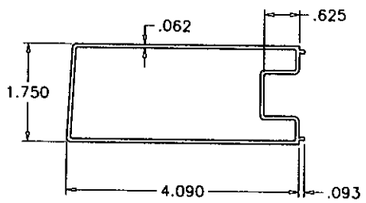

(5) DOOR HINGE STILE
TM-32995

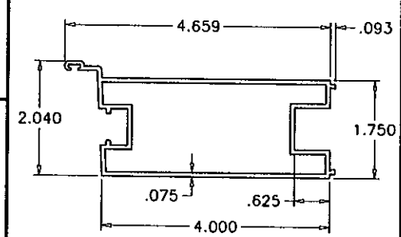

(4) ACTIVE LEAF LOCK STILE
TM-172

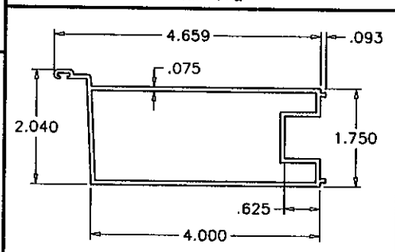

(4A) INACTIVE LEAF LOCK STILE
TM-36048

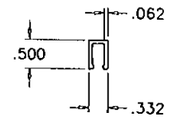

(37) PANEL GLAZING BEAD
TM-155A

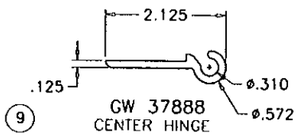

(9) GW 37888
CENTER HINGE

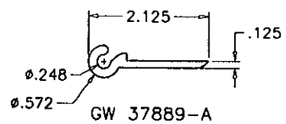

(8) GW 37889-A
OUTER HINGE

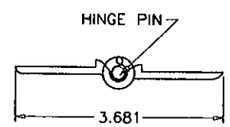

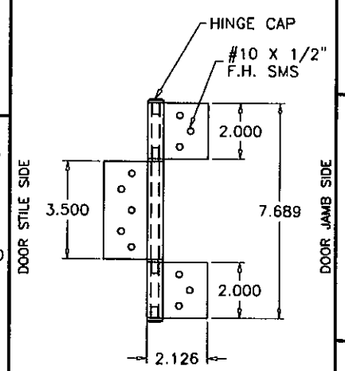

(8) BUTT HINGE

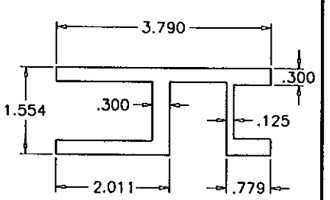

(31) REINFORCING BAR
TM-182

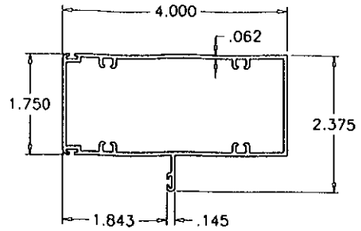

(9) SIDELITE HEAD/SILL
GW-30769

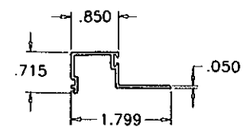

(35A) SIDELITE GLAZING BEAD (INSUL. LAM. GLASS)

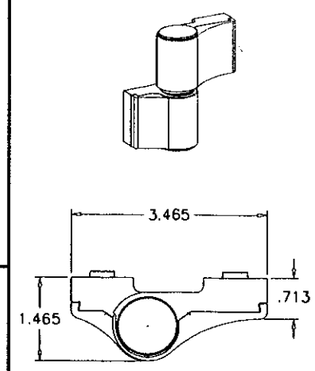

(8) PIVOT HINGE

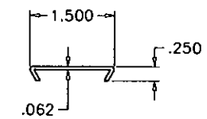

(28) STD. SILL ADAPTER
BA5798

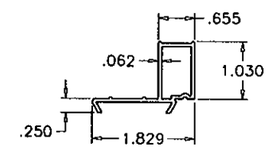

(29) HIGH SILL ADAPTER
TM-193

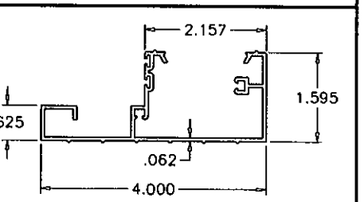

(2) FRAME SILL (STD.)
BA5797

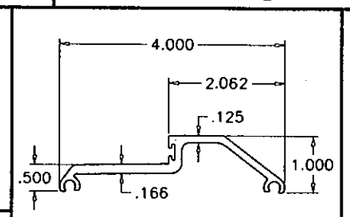

LOW THRESHOLD
897DKB

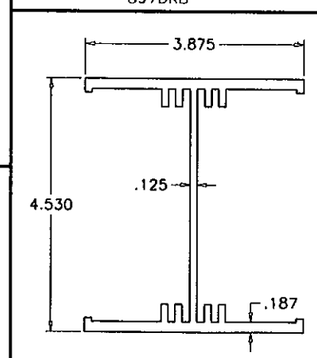

(15) 'H' MULLION
TM-121A

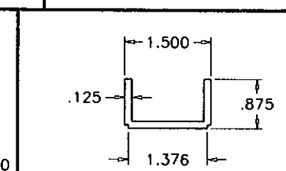

MID RAIL CORNER CHANNEL

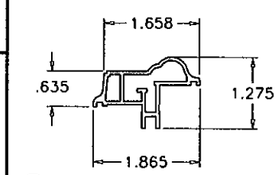

(38) INSUL. GLASS PANEL ADAPTER
TM-194

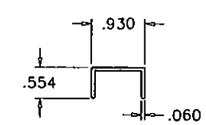

(30) SILL COVER
TM-180

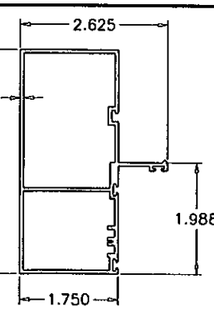

(3A) ALT. DOOR JAMB/SIDELITE FRAME
BA

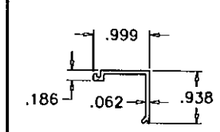

(3B) ALT. FRAME COVER
BA

Engr: JAVAD AHMAD
CIVIL
FLA. PE # 70592
C.A.N. 3538

APR 01 2011

Approved as complying with the Florida Building Code
Date APR 21, 2011
NOA# 11-0219.05
Miami Dade Product Control
By Ishaq I. Chanda

AL-FAROOQ CORPORATION
ENGINEERS & PRODUCT DEVELOPMENT
1235 S.W. 87 AVE
MIAMI, FLORIDA 33174
TEL. (305) 264-8100 FAX. (305) 262-6978
COMP-ANL\W11-03TMW

SERIES-249 ALUM OUT-SWING DOOR W/ SIDELITES (L.M.I.)

TM WINDOW AND DOOR
601 N.W. 12TH AVE.
POMPANO BEACH, FL. 33069
TEL. (954) 781-4430 FAX. (954) 781-5078

revisions:

no	date	by	description
A	03.24.11		REV. PER BNC COMMENTS

date: 02-10-11
scale: 3/8" = 1"
dr. by: HAMID
chk. by:

drawing no.
W11-03

sheet 12 of 16

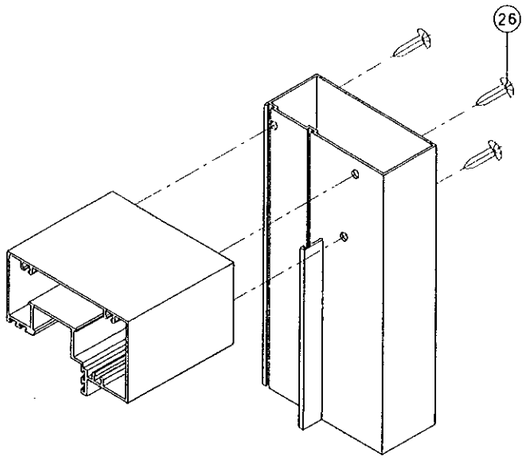

FRAME TOP CORNER
SIDELITE CORNER

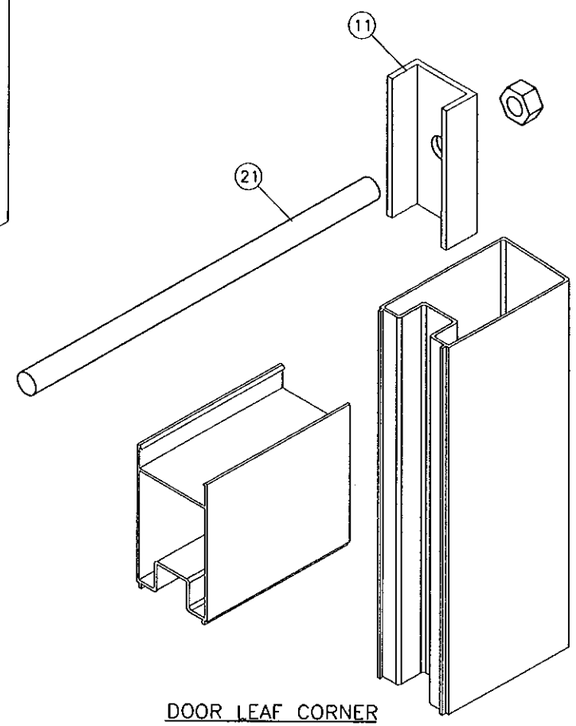

DOOR LEAF CORNER

ITEM #	PART #	QUANTITY	DESCRIPTION	MATERIAL	MANF./SUPPLIER/REMARKS
1	TM-099	1	FRAME HEAD	6063-T6	-
2	BA5797	1	FRAME SILL (STD.)	6063-T6	-
2A	8970KB	1	LOW THRESHOLD	6063-T6	-
3	BA5499	2	FRAME JAMB	6063-T6	-
3A	BA	AS REQD.	ALT. DOOR JAMB/SIDELITE FRAME	6063-T6	-
3B	BA	AS REQD.	ALT. FRAME COVER	6063-T6	-
4	TM-172	1	ACTIVE LEAF LOCK STILE	6063-T6	-
4A	TM-36048	1	INACTIVE LEAF LOCK STILE	6063-T6	-
5	TM-32995	1	PANEL HINGE STILE	6063-T6	-
6	TM-32994	1	PANEL TOP/BOTTOM RAIL	6063-T6	-
7	GW 31826	4	WEATHERSTRIP ADAPTER	6063-T6	ENO OF DOOR STILES (TOP/BOTTOM)
8	FD 107	3/ LEAF	BUTT HINGE	6063-T6	SULLIVAN & ASSOC.
8A	-	3/ LEAF	PIVOT HINGE	6063-T6	LOIRA
9	GW30769	AS REQD.	SIDELITE HEAD/SILL	6063-T6	-
10	GW 32222	2	DOOR LOCK INSERT	6063-T6	LOCK STILE
11	GW-34808	2/ LEAF	PRESSURE PLATE-TIE ROD	ALUMINUM	4" LONG
12	FB 1202	2/LEAF	FLUSH BOLT ASSEMBLY	ALUMINUM	SULLIVAN & ASSOC.
15	TM-121A	AS REQD.	'H' MULLION	6063-T6	-
16	32001	AS REQ'D.	FOAM FILLED BULB W'STRIPPING	-	.187 X .250 T-SLOT
16A	32D84	AS REQ'D.	MULTI FLAP FOAM FILLED BULB W'STRIPPING	-	-
16B	32011	AS REQ'D.	FOAM FILLED BULB W'STRIPPING	-	.187 X .350 T-SLOT
17	FBGF	2/LEAF	FLUSHBOLT GUIDE, LOCK STILE ENDS (TOP/BOTTOM)	6063-T6	M & M PLASTICS
19	TM-29236	1	PANEL BOTTOM RAIL	6063-T6	-
20	-	AS REQD.	#10 x 1/2" F.H. UNDERCUT SMS.	STEEL	AT FLUSH BOLTS
21	-	2/LEAF	1/2"ø THREADED ROD, WASHER & NUT	STEEL	TOP/BOTTOM END RAILS
22	-	-	DEAD BOLT LOCKING HANDLE	-	KWIK-SET
23	-	1	MULTI POINT LOCK	-	ACTIVE LEAF, 41" FROM BOTTOM
25	-	36	DUST PLUG (OPTIONAL)	PLASTIC	DOOR JAMB INSTALL. SCREW HOLES
26	-	AS REQD.	#10 x 1" P.H. SMS. (ASSY. SCREW)	STEEL	DOOR FRAME MEMBERS/MULL CLIPS
28	BA5798	AS REQD.	STD. SILL ADAPTER	6063-T5	-
29	BA	AS REQD.	HIGH SILL ADAPTER (USED WITH STD. SILL)	6063-T5	-
30	TM-180	1	SILL COVER	6063-T6	-
31	TM-182	-	LOCK STILE REINFORCEMENT	6063-T6	-
35	TM-157	4	SIDELITE GLAZING BEAD (LAM. GLASS)	6063-T6	SIDE LITE GLAZING PERIMETER
35A	-	4	SIDELITE GLAZING BEAD (INSUL. LAM. GLASS)	6063-T6	SIDE LITE GLAZING PERIMETER
37	TM-155A	OPTIONAL	PANEL GLAZING BEAD	6063-T6	-
38	TM-194	-	INSUL. GLASS PANEL ADAPTER	6063-T5	-

DOOR COMPONENTS

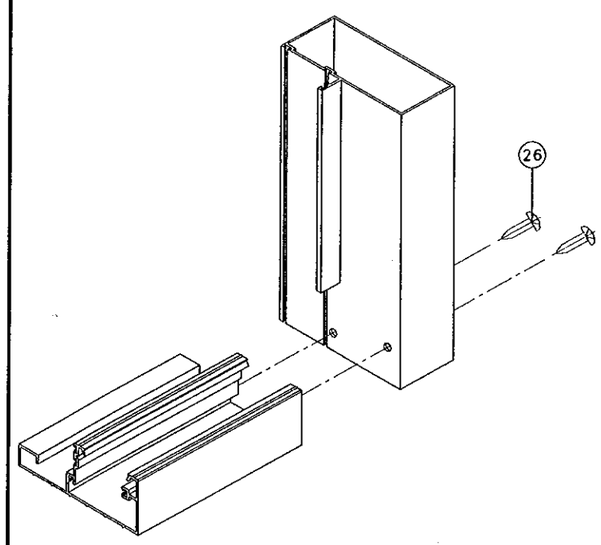

FRAME BOTTOM CORNER

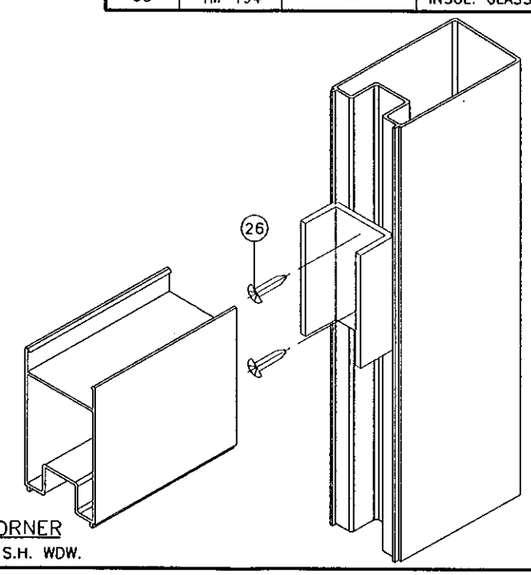

MID RAIL CORNER
SINGLE DOOR W/ S.H. WDW.

Approved as complying with the Florida Buiding Code
Date APR 21 2011
NOA# 11-0218.06
Miami Dade Product Control
By Ishaq I. Obanda

Engr: JAVAD AHMAD
CIVIL
FLA. PE # 70592
C.A.N. 3538

APR 01 2011

AL-FAROOQ CORPORATION
ENGINEERS & PRODUCT DEVELOPMENT
1235 S.W. 87 AVE
MIAMI, FLORIDA 33174
TEL. (305) 264-8100 FAX. (305) 262-6978

COMP-ANL\W11-03TMW

SERIES-249 ALUM OUT-SWING DOOR W/ SIDELITES (L.M.I.)

TM WINDOW AND DOOR
601 N.W. 12TH AVE.
POMPANO BEACH, FL. 33069
TEL. (954) 781-4430 FAX. (954) 781-5078

revisions:

no	date	by	description
A	03.24.11		REV. PER BNC COMMENTS

date: 02-10-11
scale: 3/8" = 1"
dr. by: HAMID
chk. by:

drawing no.
W11-03

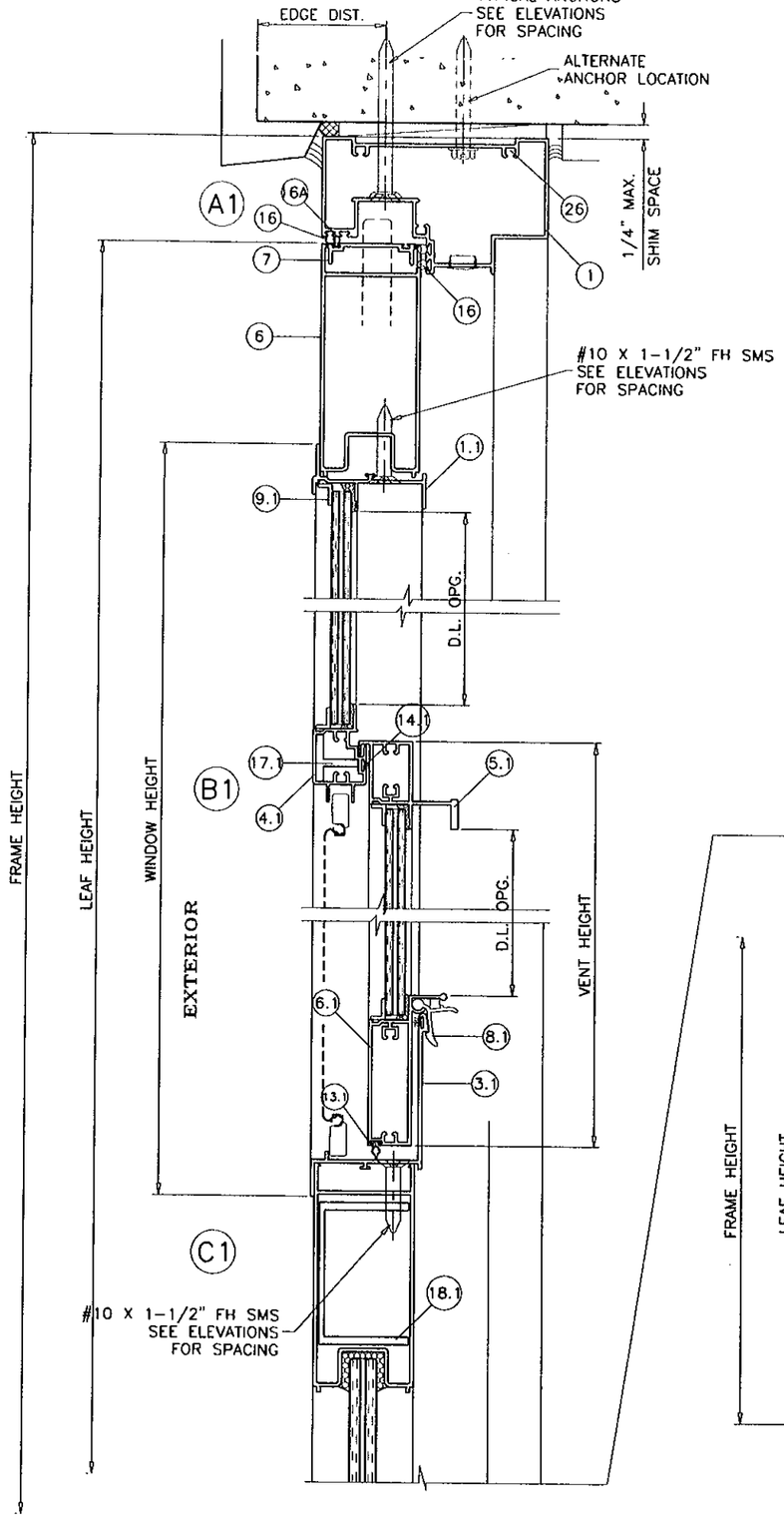

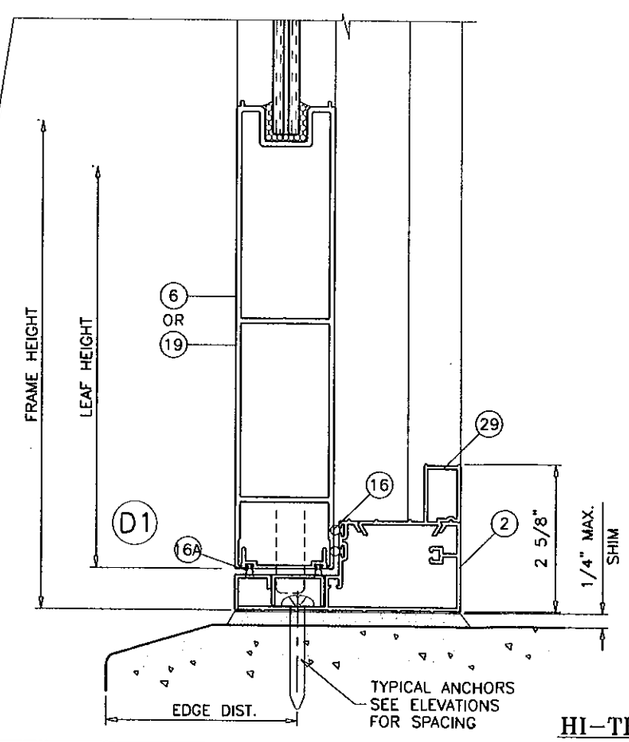

HI-THRESHOLD OPTION

SINGLE (X) OPERATING UNITS W/ S.H. WDW.

Approved as complying with the Florida Building Code
Date APR 21, 2011
NOA# 11-0218.05
Miami Dade Product Control
By Ishag I. Ghanem

Engr: JAVAD AHMAD
CIVIL
FLA. PE # 70592
C.A.N. 3538
APR 01 2011

AL-FAROOQ CORPORATION
ENGINEERS & PRODUCT DEVELOPMENT
1235 S.W. 87 AVE
MIAMI, FLORIDA 33174
TEL. (305) 264-8100 FAX. (305) 262-6978
COMP-ANL\W11-03TMW

SERIES-249 ALUM OUT-SWING DOOR W/ SIDELITES (L.M.I.)

TM WINDOW AND DOOR
601 N.W. 12TH AVE.
POMPANO BEACH, FL. 33069
TEL. (954) 781-5078 FAX. (954) 781-4430

revisions:

no	date	by	description
A	03.24.11		REV. PER BNC COMMENTS

date: 02-10-11
scale: 3/8" = 1"
dr. by: HAMID
chk. by:

drawing no.
W11-03

sheet 14 of 16

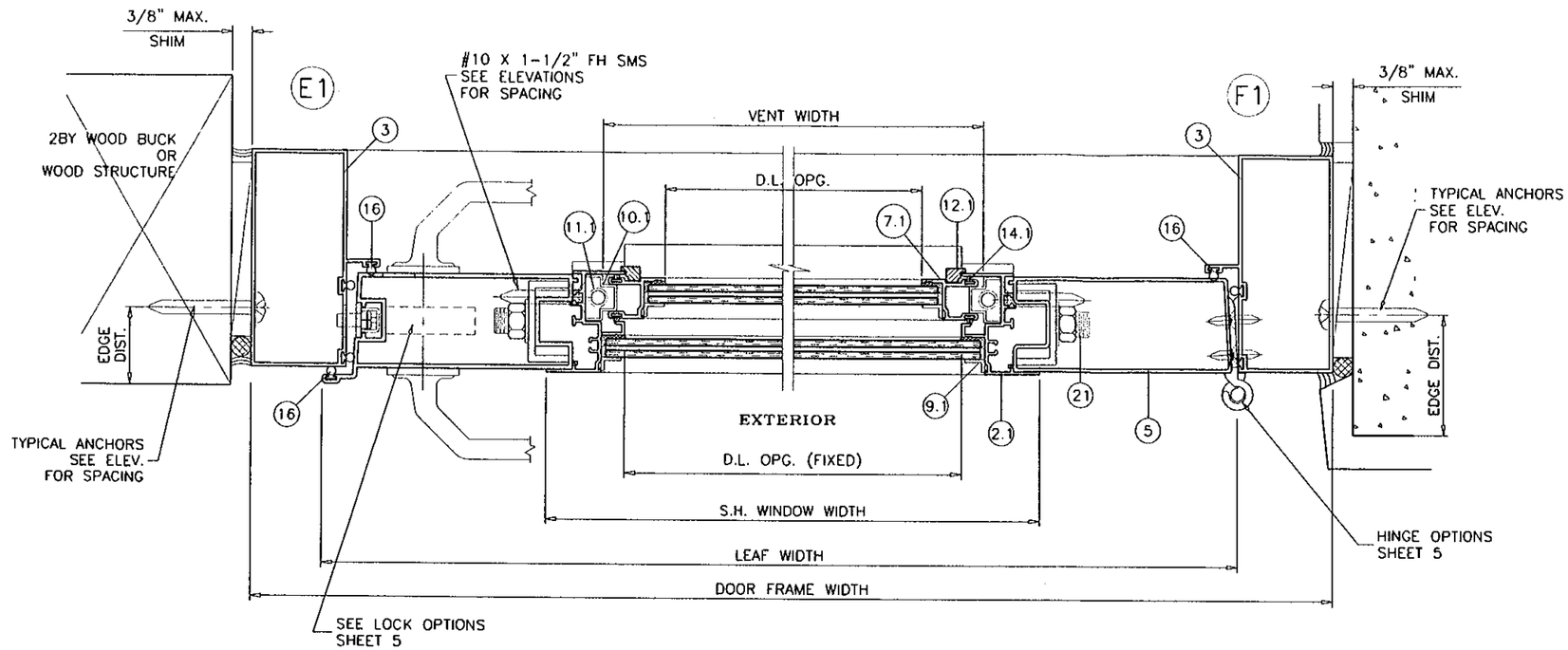

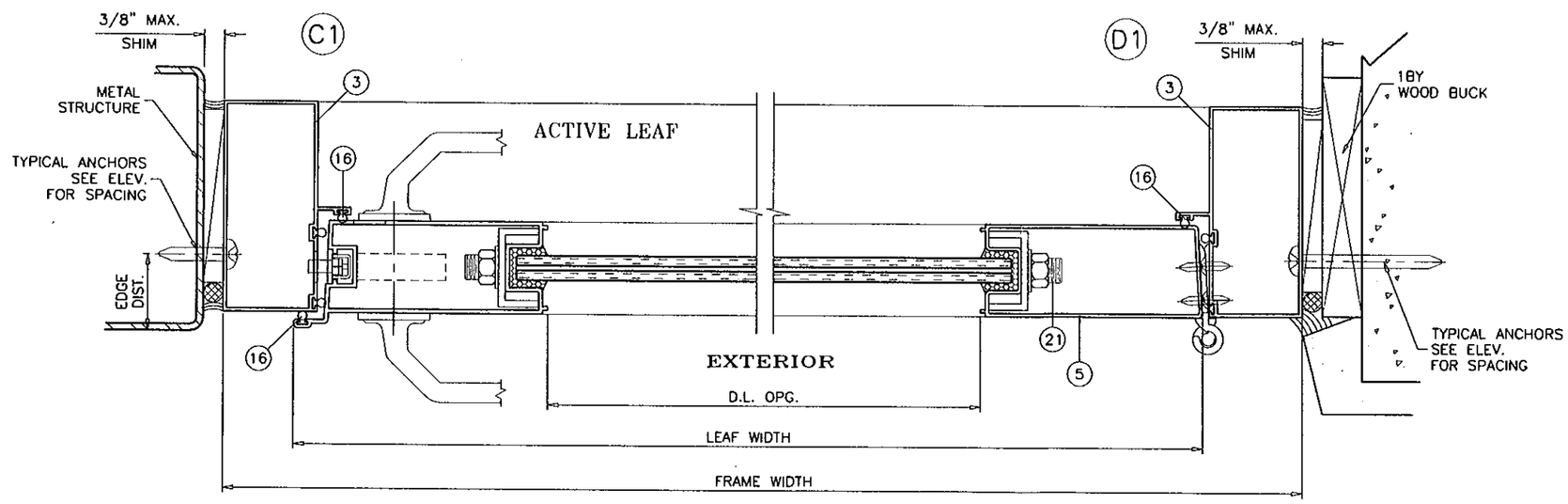

SINGLE (X) OPERATING UNITS W/ S.H. WDW.

Approved as complying with the Florida Building Code
Date APR 21 2011
NOA# 11-0218.05
Miami Dade Product Control
By Ishaq I. Chanda

Engr: JAVAD AHMAD
CIVIL
FLA. PE # 70592
C.A.N. 3538
APR 07 2011

AL-FAROOQ CORPORATION
ENGINEERS & PRODUCT DEVELOPMENT
1235 S.W. 87 AVE
MIAMI, FLORIDA 33174
TEL. (305) 264-8100 FAX. (305) 262-6978
COMP-ANL\W11-03TMW

SERIES-249 ALUM OUT-SWING DOOR W/ SIDELITES (L.M.I.)

TM WINDOW AND DOOR
601 N.W. 12TH AVE.
POMPANO BEACH, FL. 33069
TEL. (954) 781-5078 FAX. (954) 781-4430

revisions:

no	date	by	description
A	03.24.11		REV. PER BNC COMMENTS

date: 02-10-11
scale: 3/8" = 1"
dr. by: HAMID
chk. by:

drawing no.
W11-03

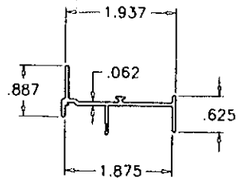

(1.1) FRAME HEAD

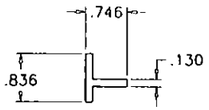

(17.1) FIXED RAIL REINF.

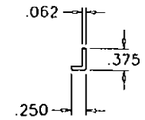

(9.1) GLASS STOP ANGLE

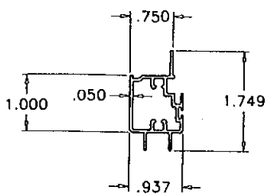

(4.1) FIXED MEETING RAIL

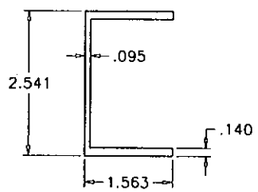

(18.1) DOOR STILE REINF.

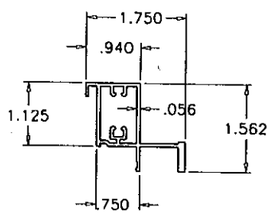

(5.1) STD. VENT TOP RAIL

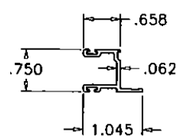

(7.1) SASH SIDE RAIL

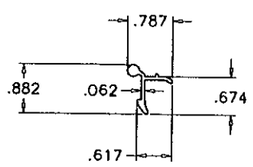

(8.1) SASH LATCH

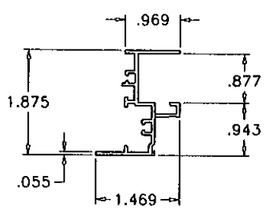

(2.1) FRAME JAMB

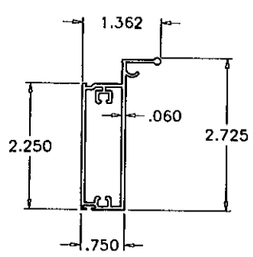

(6.1) VENT BOTTOM RAIL

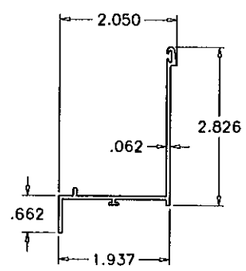

(3.1) FRAME SILL

ITEM #	PART #	REQD.	DESCRIPTION	MATERIAL	MANF./SUPPLIER/REMARKS
1.1	GW-31798	1	FRAME HEAD	6063-T6	–
2.1	TM-117	2	FRAME JAMB	6063-T6	–
3.1	–	1	FRAME SILL	6063-T6	–
4.1	GW-36123	1	FIXED MTG. RAIL	6063-T6	–
5.1	TM-113	1	STD. VENT TOP RAIL	6063-T6	–
6.1	TM-112	1	VENT BOTTOM RAIL	6063-T6	–
7.1	GW-31802	2	VENT JAMB	6063-T6	–
8.1	TM-115	2/VENT	SPRING LOADED EGRESS LOCK @ 6" FROM ENDS	6063-T6	–
8A.1	–	2/VENT	LATCH LOCK @ 6" FROM ENDS	CAST	–
9.1	–	AS REQD.	GLAZING STOP ANGLE	ALUMINUM	–
10.1	–	2	VENT STOP (5-1/4" LONG)	PLASTIC	–
11.1	–	2	SPIRAL BALANCE	–	CALDWELL
12.1	–	4	VENT GUIDE	PLASTIC	–
13.1	WV-3045	AS REQD.	BULB WEATHERSTRIP	VINYL	–
14.1	W43201	AS REQD.	FIN SEAL WEATHERSTRIP	WOOL	–
15.1	W43371	AS REQD.	FIN SEAL WEATHERSTRIP	WOOL	–
16.1	–	1	FRAME/VENT ASSEMBLY SCREWS	CRS	#10 x 1" P.H. SMS
17.1	–	–	FIXED RAIL REINFORCING	ALUMINUM	–
18.1	–	–	DOOR STILE REINFORCING	ALUMINUM	–

S.H. WINDOW COMPONENTS

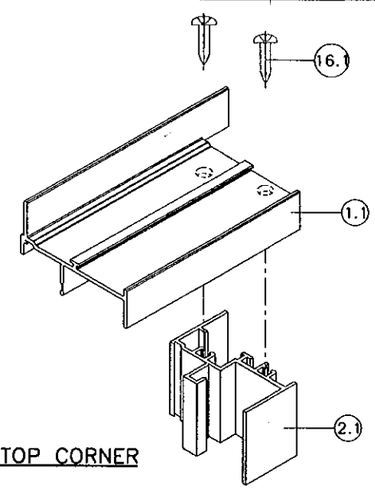

FRAME TOP CORNER

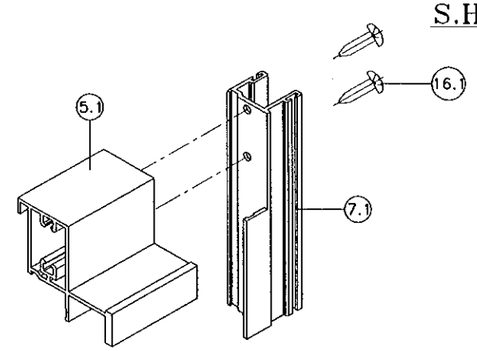

VENT TOP CORNER

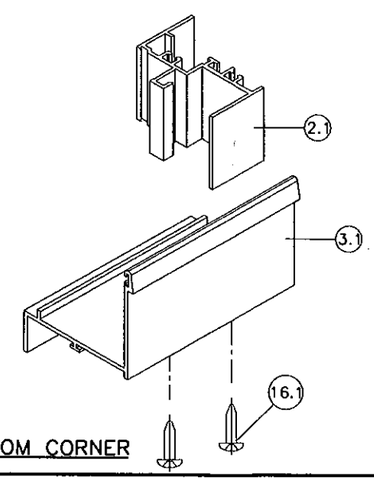

FRAME BOTTOM CORNER

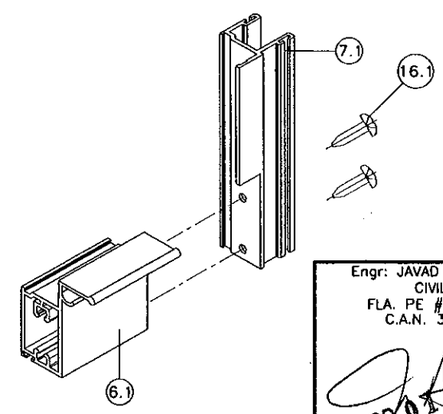

VENT BOTTOM CORNER

Approved as complying with the Florida Building Code
Date APR 21, 2011
NOA# 11-0218.05
Miami Dade Product Control
By Ishaq I. Chanda

Engr: JAVAD AHMAD
CIVIL
FLA. PE # 70592
C.A.N. 3538

APR 01 2011

AL-FAROOQ CORPORATION
ENGINEERS & PRODUCT DEVELOPMENT
1235 S.W. 87 AVE
MIAMI, FLORIDA 33174
TEL. (305) 264-8100 FAX. (305) 262-6978
COMP-ANL\W11-03TMW

SERIES-249 ALUM OUT-SWING DOOR W/ SIDELITES (L.M.I.)

TM WINDOW AND DOOR
601 N.W. 12TH AVE.
POMPANO BEACH, FL. 33069
TEL. (954) 781-4430 FAX. (954) 781-5078

revisions:

no	date	by	description
A	03.24.11		REV. PER BNC COMMENTS

date: 02-10-11
scale: 3/8" = 1"
dr. by: HAMID
chk. by:

drawing no. W11-03