BUILDING AND NEIGHBORHOOD COMPLIANCE DEPARTMENT (BNC)
BOARD AND CODE ADMINISTRATION DIVISION

MIAMI–DADE COUNTY, FLORIDA
PRODUCT CONTROL SECTION
11805 SW 26th Street, Room 208
Miami, Florida 33175–2474
T (786) 315–2590 F (786) 315–2599
www.miamidade.gov/building

NOTICE OF ACCEPTANCE (NOA)

Hartman Windows & Doors, LLC
531 Southern Boulevard
West Palm Beach, FL 33405

SCOPE:

This NOA is being issued under the applicable rules and regulations governing the use of construction materials. The documentation submitted has been reviewed and accepted by Miami–Dade County BNC–Product Control Section to be used in Miami–Dade County and other areas where allowed by the Authority Having Jurisdiction (AHJ).

This NOA shall not be valid after the expiration date stated below. The Miami–Dade County Product Control Section (In Miami–Dade County) and/or the AHJ (in areas other than Miami–Dade County) reserve the right to have this product or material tested for quality assurance purposes. If this product or material fails to perform in the accepted manner, the manufacturer will incur the expense of such testing and the AHJ may immediately revoke, modify, or suspend the use of such product or material within their jurisdiction. BNC reserves the right to revoke this acceptance, if it is determined by Miami–Dade County Product Control Section that this product or material fails to meet the requirements of the applicable building code.

This product is approved as described herein, and has been designed to comply with the Florida Building Code, including the High Velocity Hurricane Zone.

DESCRIPTION: Series "European Mahogany Lift/ Slide" 10'0" Wood Sliding Glass Door – L.M.I.

APPROVAL DOCUMENT: Drawing No. **W07–47**, titled "Series European Wood Lift/ Slide Glass Door (L.M.I.)", sheets 1 through 9 of 9, dated 05/17/2007 with revision "**D**" dated 05/27/11, prepared by Al–Farooq Corporation, signed and sealed by Javad Ahmad, P. E., bearing the Miami–Dade County Product Control Revision stamp with the Notice of Acceptance number and Expiration date by the Miami–Dade County Product Control Section.

MISSILE IMPACT RATING: Large and Small Missile Impact Resistant.

LABELING: Each unit shall bear a permanent label with the manufacturer's name or logo, city, state, model/ series and following statement: "Miami–Dade County Product Control Approved" unless otherwise noted herein.

RENEWAL of this NOA shall be considered after a renewal application has been filed and there has been no change in the applicable building code negatively affecting the performance of this product.

TERMINATION of this NOA will occur after the expiration date or if there has been a revision or change in the materials, use, and/or manufacture of the product or process. Misuse of this NOA as an endorsement of any product, for sales, advertising or any other purposes shall automatically terminate this NOA. Failure to comply with any section of this NOA shall be cause for termination and removal of NOA.

ADVERTISEMENT: The NOA number preceded by the words Miami–Dade County, Florida, and followed by the expiration date may be displayed in advertising literature. If any portion of the NOA is displayed, then it shall be done in its entirety.

INSPECTION: A copy of this entire NOA shall be provided to the user by the manufacturer or its distributors and shall be available for inspection at the job site at the request of the Building Official.

This NOA **revises NOA No. 09–0518.03** and consists of this page 1, evidence pages E–1 and E–2, as well as approval document mentioned above.

The submitted documentation was reviewed by **Jaime D. Gascon, P. E.**

MIAMI-DADE COUNTY APPROVED

J. Gascon
6/10/11.

NOTICE OF ACCEPTANCE: EVIDENCE SUBMITTED

A. DRAWINGS

1. Manufacturer's die drawings and sections.
2. Drawing No **W07–47**, titled "Series European Wood Lift/ Slide Glass Door (L.M.I.)", sheets 1 through 9 of 9, dated 05/17/2007 with revision "**D**" dated 05/27/2011, prepared by Al–Farooq Corporation, signed and sealed by Javad Ahmad, P. E.

B. TESTS

1. Test reports on: 1) Air Infiltration Test, per FBC, TAS 202–94
   2) Uniform Static Air Pressure Test, Loading per FBC TAS 202–94
   3) Water Resistance Test, per FBC, TAS 202–94
   4) Large Missile Impact Test per FBC, TAS 201–94
   5) Cyclic Wind Pressure Loading per FBC, TAS 203–94
   6) Forced Entry Test, Type "C" sliding door, Grade 10, per FBC 2411 3.2.1, TAS 202–94 and per ASTM F 842–04
   7) Standard Test Methods for Deglazing Force of Fenestration Products per ASTM E 987–88 (2009)
   8) Standard Test Method for Determination of Operating Force of Sliding Windows and Doors per ASTM E2068–00 (2008)

   along with marked–up drawings and installation diagram, prepared by Fenestration Testing Laboratory, Inc., Test Report No. **FTL–6287**, dated 09/03/2010, signed and sealed by Jorge A. Causo, P. E.
2. Test reports on: 1) Air Infiltration Test, per FBC, TAS 202–94
   2) Uniform Static Air Pressure Test, Loading per FBC TAS 202–94
   3) Water Resistance Test, per FBC, TAS 202–94
   4) Large Missile Impact Test per FBC, TAS 201–94
   5) Cyclic Wind Pressure Loading per FBC, TAS 203–94
   6) Forced Entry Test, per FBC 2411 3.2.1, TAS 202–94

   along with marked–up drawings and installation diagram, prepared by Fenestration Testing Laboratory, Inc., Test Reports No.'s **FTL–5146** and **FTL–4942**, dated 03/03/2007, signed and sealed by Michael R. Wenzel, P. E.
   (Submitted under previous NOA No. 07–0820.01)

C. CALCULATIONS

1. Anchor verification calculations and structural analysis, complying with FBC–2007, prepared by Al–Farooq Corporation, dated 01/21/2011, signed and sealed by Javad Ahmad, P. E.
   Complies with ASTM E1300–04

Jaime D. Gascon, P. E.
Product Control Section Supervisor
NOA No. 11–0303.01
Expiration Date: November 15, 2012
Approval Date: June 16, 2011

NOTICE OF ACCEPTANCE: EVIDENCE SUBMITTED

D. QUALITY ASSURANCE

1. Miami–Dade Building and Neighborhood Compliance Department (BNC).

E. MATERIAL CERTIFICATIONS

1. Notice of Acceptance No. **10–0413.04** issued to E.I. DuPont DeNemours & Co., Inc. for their "**DuPont Sentry Glass® Interlayer**" dated 05/26/2010, expiring on 01/14/12.
2. Notice of Acceptance No. **10–0922.09** issued to E.I. DuPont DeNemours & Co., Inc. for their "**DuPont Butacite® PVB, Interlayer**" dated 12/24/10, expiring on 12/11/11.
3. Notice of Acceptance No. **11–0325.05** issued to Solutia Inc. for their "**Saflex and Vanceva clear and color interlayers**" dated 05/05/11, expiring on 05/21/16.
4. Material Safety data sheet no. **MSDS–02168715**, dated 07/11/2007 by Dow Corning Corporation.

F. STATEMENTS

1. Statement letter of conformance, no financial interest and compliance with the FBC–2007, dated January 26, 2011, signed and sealed by Javad Ahmad, P. E.
2. Laboratory compliance letter for Test Report No. **FTL–6287**, issued by Fenestration Testing Laboratory, Inc., dated 09/14/10, signed by Manny Sanchez, C.E.O.
3. Laboratory compliance letter for Test Reports No.'s **FTL–5146** and **FTL–4942**, issued by Fenestration Testing Laboratory, Inc., dated 03/03/2007, signed and sealed by Michael R. Wenzel, P. E.
   (Submitted under previous NOA No. 07–0820.01)
4. Proposal issued by Product Control, dated March 30, 2010, signed by Jaime D. Gascon, P. E.

G. OTHERS

1. Notice of Acceptance **No. 09–0518.03**, issued to Hartman Windows & Doors, LLC for their Series "**European Mahogany Lift/ Slide" 10'0" Wood Sliding Glass Door – L.M.I.**", approved on 11/25/2009 and expiring on 11/15/2012.

Jaime D. Gascon, P. E.
Product Control Section Supervisor
NOA No. 11–0303.01
Expiration Date: November 15, 2012
Approval Date: June 16, 2011

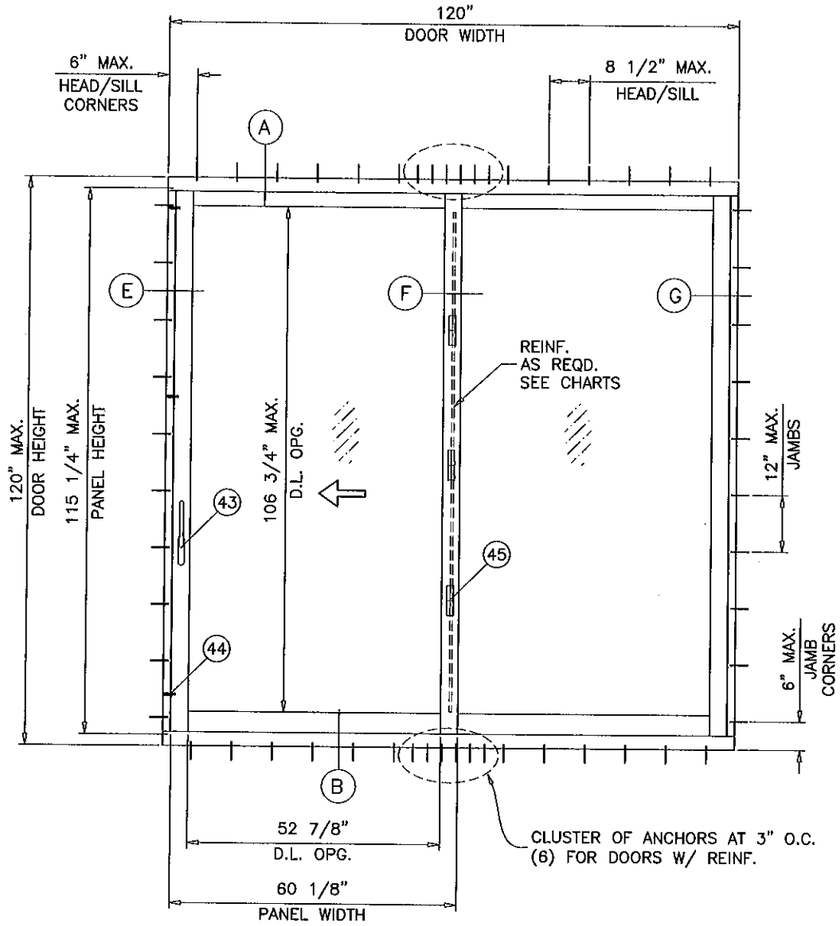

DAYLITE OPENINGS:

DLO WIDTH = PANEL WIDTH – 7.250"
DLO HEIGHT = PANEL HEIGHT – 8.5"

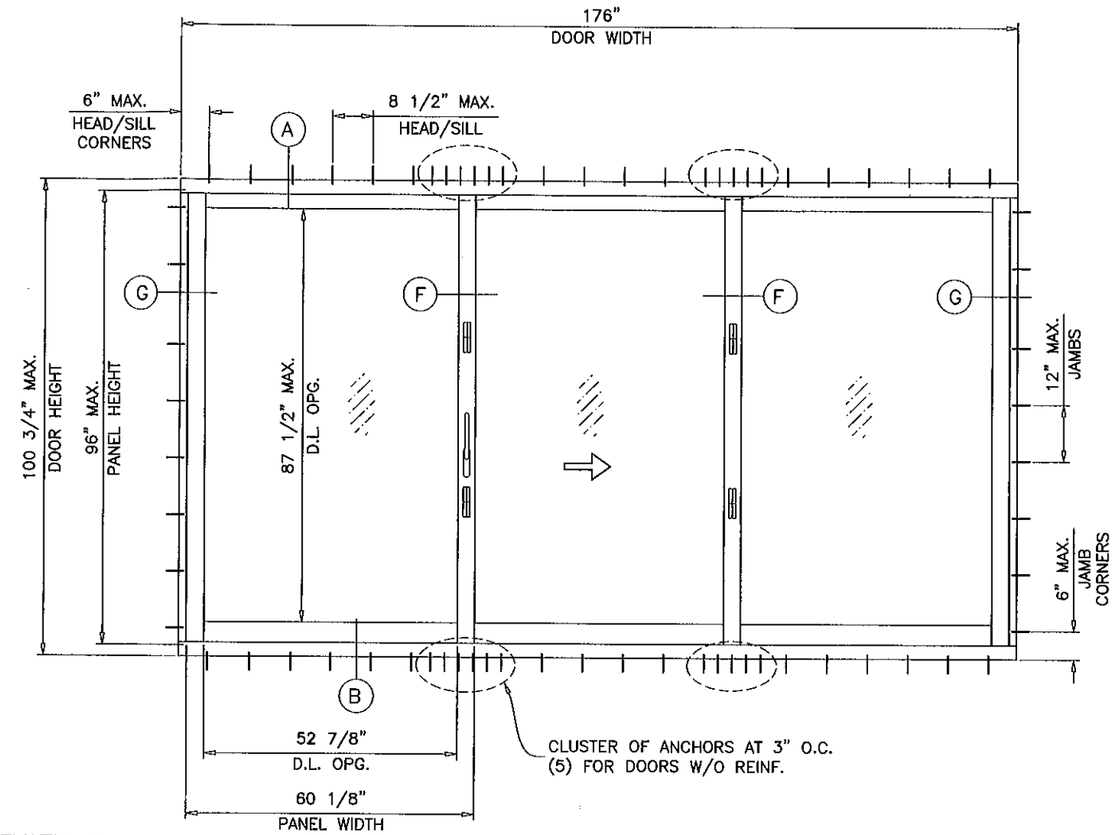

TYPICAL ELEVATIONS
TESTED UNITS

DAYLITE OPENINGS:

DLO WIDTH = PANEL WIDTH – 7.250"
DLO HEIGHT = PANEL HEIGHT – 8.5"

EUROPEAN WOOD LIFT/SLIDE GLASS DOOR

DESIGN LOAD RATING FOR DOORS TO BE AS PER CHARTS SHOWN ON SHEET 4.

THIS PRODUCT HAS BEEN DESIGNED AND TESTED TO COMPLY WITH THE REQUIREMENTS OF THE FLORIDA BUILDING CODE 2007 EDITION INCLUDING HIGH VELOCITY HURRICANE ZONE (HVHZ).

1BY OR 2BY WOOD BUCKS BY OTHERS, MUST BE ANCHORED PROPERLY TO TRANSFER LOADS TO THE STRUCTURE.

ANCHORS SHALL BE AS LISTED, SPACED AS SHOWN ON DETAILS, ANCHORS EMBEDMENT TO BASE MATERIAL SHALL BE BEYOND WALL DRESSING OR STUCCO.

ANCHORING OR LOADING CONDITIONS NOT SHOWN IN THESE DETAILS ARE NOT PART OF THIS APPROVAL.

A LOAD DURATION INCREASE IS USED IN DESIGN OF ANCHORS INTO WOOD ONLY.

MATERIALS INCLUDING BUT NOT LIMITED TO STEEL/METAL SCREWS, THAT COME INTO CONTACT WITH OTHER DISSIMILAR MATERIALS SHALL MEET THE REQUIREMENTS OF 2007 FLORIDA BLDG. CODE SECTION 2003.8.4.

LIFT & SLIDE HARDWARE:

TYPE 1 BY 'G.U. HARDWARE INC.'
TYPE 2 BY 'A.G.B. HARDWARE SYSTEMS'
TYPE 3 BY 'SIEGENIA AUBI'

LOCKS:

3 POINT LOCK SYSTEM FOR DOOR HEIGHTS UPTO 100–3/4"
4 POINT LOCK SYSTEM FOR DOOR HEIGHTS UPTO 120"
WITH LEVER TYPE ACTUATING HANDLE AT PANEL LOCK STILE AT 39" FROM BOTTOM.

ANTI–BLOW OUT CLIPS:

6–1/4" LONG SURFACE MOUNT ALUMINUM CLIPS AT EACH INTERLOCK STILES LOCATED AT 28" O.C.
2 FOR DOOR HEIGHTS UPTO 100–3/4"
3 FOR DOOR HEIGHTS UPTO 120"
EACH CLIP FASTENED WITH #6 X 1" F.H. SMS

THESE DOORS ARE RATED FOR LARGE & SMALL MISSILE IMPACT. SHUTTERS ARE NOT REQUIRED.

Engr: JAVAD AHMAD
CIVIL
FLA. PE # 70592
C.A.N. 3538

JUN 03 2011

PRODUCT REVISED
as complying with the Florida Building Code
Acceptance No 11-0303.01
Expiration Date 11/15/2012
By
Miami Dade Product Control

AL-FAROOQ CORPORATION
ENGINEERS & PRODUCT DEVELOPMENT
1235 S.W. 87 AVE
MIAMI, FLORIDA 33174
TEL. (305) 264-8100 FAX. (305) 262-6978
COMP-ANL\W07-16HWD

EUROPEAN WOOD LIFT/SLIDE GLASS DOOR (L.M.I.)

HARTMAN WINDOWS & DOORS, LLC
531 SOUTHERN BLVD.
WEST PALM BEACH, FL 33405
TEL. (561) 296-9600 FAX. (561) 296-9601

revisions:

no	date	by	description
A	03.26.09		UPDATED FOR 2007 FBC
B	10.19.09		REV. PER BCCO COMMENTS
C	02.08.11		GENERAL REVISION
D	05.27.11		REV. PER BNC COMMENTS

date: 05-17-07
scale: 3/8"=1'-0"
dr. by: HAMID
chk. by:

drawing no.
W07-47

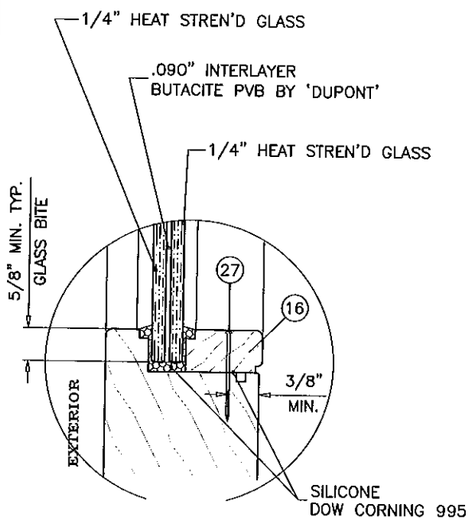

GLAZING TYPE 'E'

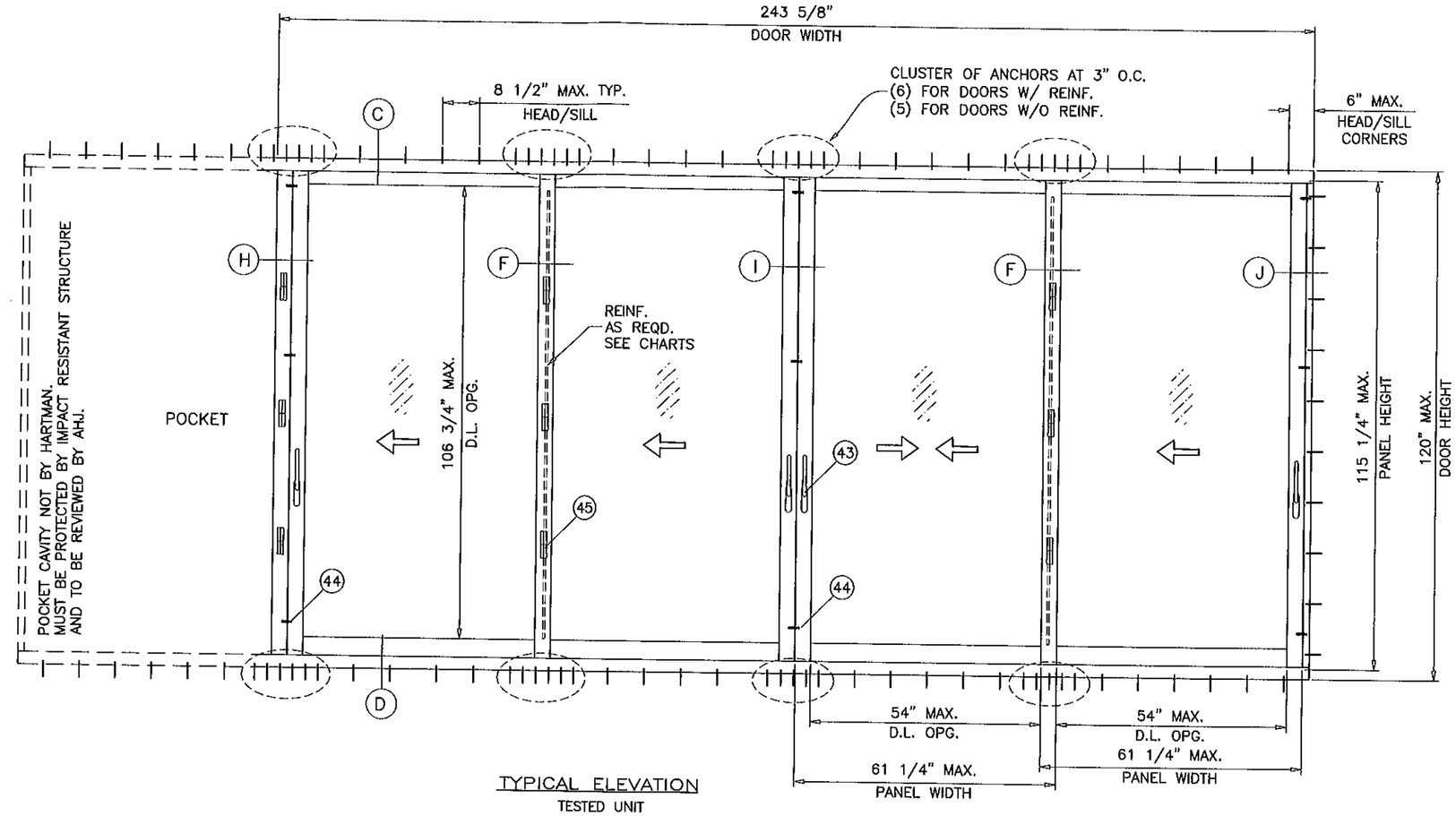

TYPICAL ELEVATION

TESTED UNIT

DAYLITE OPENINGS:

DLO WIDTH = PANEL WIDTH – 7.250"
DLO HEIGHT = PANEL HEIGHT – 8.5"

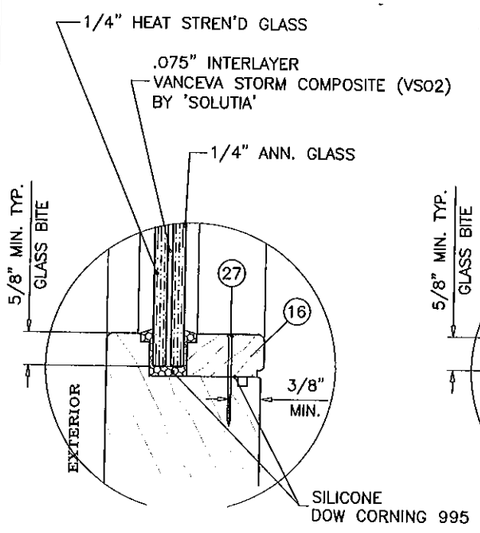

GLAZING TYPE 'A'

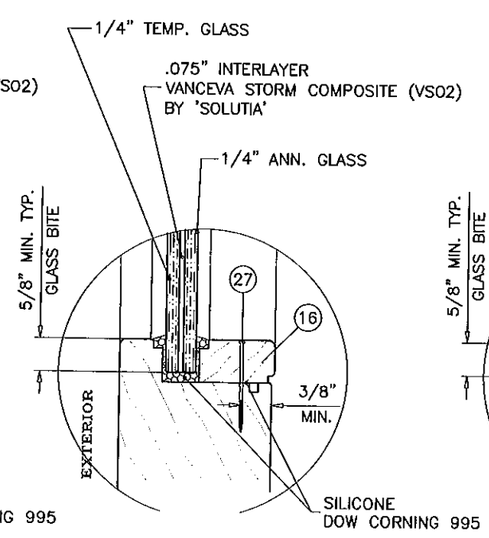

GLAZING TYPE 'B'

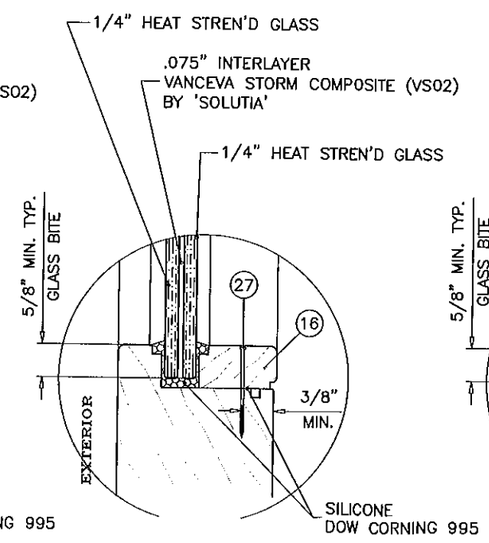

GLAZING TYPE 'C'

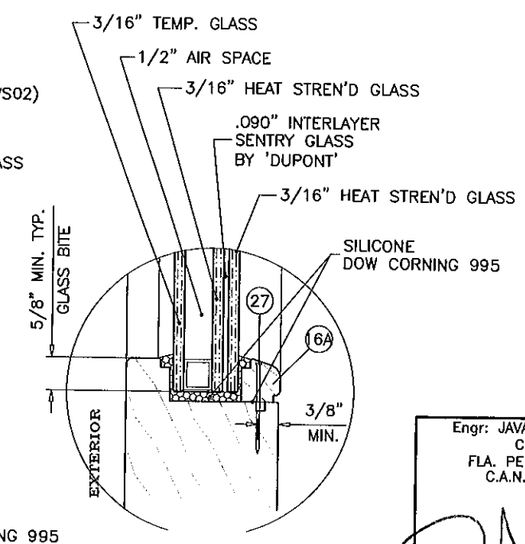

GLAZING TYPE 'D'

GLAZING OPTIONS

Engr: JAVAD AHMAD
CIVIL
FLA. PE # 70592
C.A.N. 3538

JUN 03 2011

PRODUCT REVISED
as complying with the Florida
Building Code
Acceptance No 11-0303.01
Expiration Date 11/15/2012
By
Miami Dade Pro[illegible] Control

AL-FAROOQ CORPORATION
ENGINEERS & PRODUCT DEVELOPMENT
1235 S.W. 87 AVE
MIAMI, FLORIDA 33174
TEL. (305) 264-8100 FAX. (305) 262-6978
COMP-ANL\W07-16HWD

EUROPEAN WOOD LIFT/SLIDE GLASS DOOR (L.M.I.)

HARTMAN WINDOWS & DOORS, LLC
531 SOUTHERN BLVD.
WEST PALM BEACH, FL 33405
TEL. (561) 296-9600 FAX. (561) 296-9601

revisions:

no	date	by	description
A	03.26.09		UPDATED FOR 2007 FBC
B	10.19.09		REV. PER BCCO COMMENTS
C	02.08.11		GENERAL REVISION
D	05.27.11		REV. PER BNC COMMENTS

date: 05-17-07
scale: 3/8" = 1"
dr. by: HAMID
chk. by:

drawing no.
W07-47

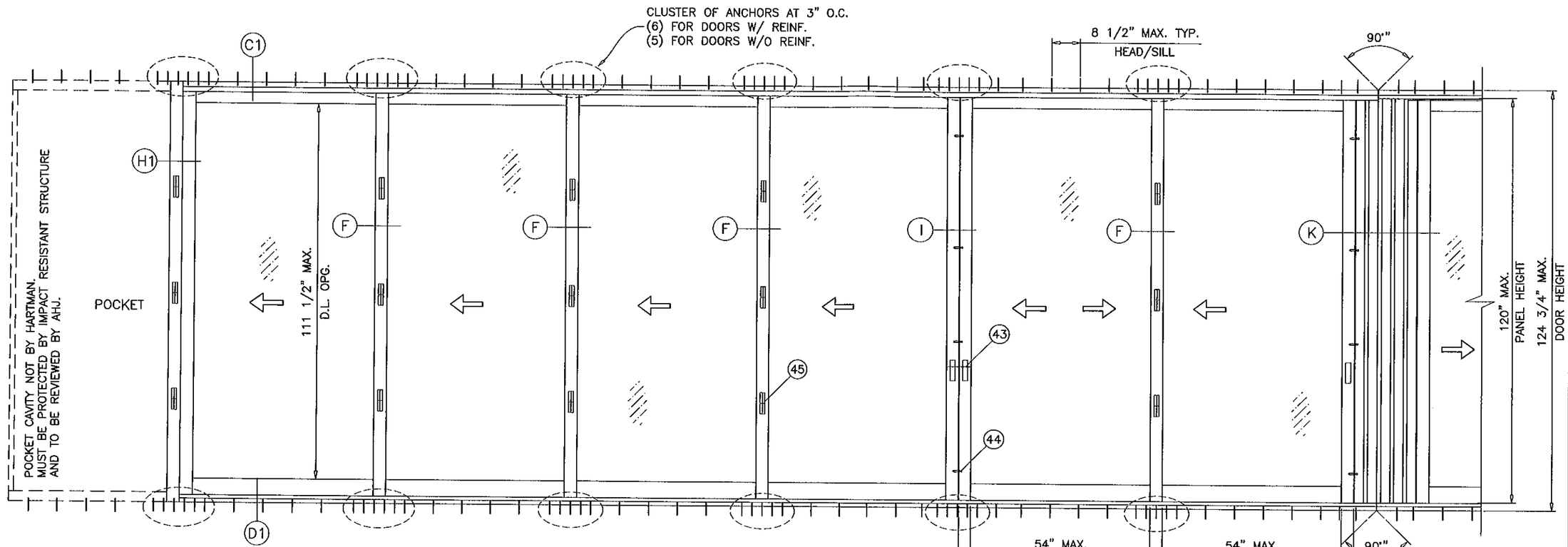

TYPICAL ELEVATION
4 TRACK DOOR WITH 90' CORNER

DAYLITE OPENINGS:

DLO WIDTH = PANEL WIDTH – 7.250"
DLO HEIGHT = PANEL HEIGHT – 8.5"

THIS DOOR CAN BE MANUFACTURED IN TWO, THREE OR FOUR TRACKS WITH ANY NUMBER OF PANELS THAT CONTAIN THE STILE CONDITIONS SHOWN IN THESE DETAILS.

Engr: JAVAD AHMAD
CIVIL
FLA. PE # 70592
C.A.N. 3538

JUN 03 2011

PRODUCT REVISED
is complying with the Florida
Building Code
Acceptance No 11-0303.01
Expiration Date 11/15/2012
By
Miami Dade Product Control

AL-FAROOQ CORPORATION
ENGINEERS & PRODUCT DEVELOPMENT
1235 S.W. 87 AVE
MIAMI, FLORIDA 33174
TEL. (305) 264-8100 FAX. (305) 262-6978
COMP-ANL\W07-16HWD

EUROPEAN WOOD LIFT/SLIDE GLASS DOOR (L.M.I.)

HARTMAN WINDOWS & DOORS, LLC
531 SOUTHERN BLVD.
WEST PALM BEACH, FL 33405
TEL. (561) 296-9600 FAX. (561) 296-9601

revisions:

no	date	by	description
C	02.08.11		GENERAL REVISION
D	05.27.11		REV. PER BNC COMMENTS

date: 05-17-07
scale: 3/8" = 1"
dr. by: HAMID
chk. by:

drawing no.
W07-47

sheet 3 of 18

DESIGN LOAD CAPACITY – PSF MTG. STILES WITHOUT REINFORCING							
PANEL WIDTH NOMINAL INCHES	DOOR HEIGHT INCHES	GLASS TYPES 'A' & 'B'		GLASS TYPE 'D'		GLASS TYPE 'E'	
		EXT.(+)	INT.(–)	EXT.(+)	INT.(–)	EXT.(+)	INT.(–)
48	80	70.0	70.0	70.0	70.0	70.0	70.0
54		70.0	70.0	70.0	70.0	70.0	70.0
60		70.0	70.0	70.0	70.0	70.0	70.0
66		70.0	70.0	70.0	70.0	70.0	70.0
72		70.0	70.0	70.0	70.0	70.0	70.0
48	84	70.0	70.0	70.0	70.0	70.0	70.0
54		70.0	70.0	70.0	70.0	70.0	70.0
60		70.0	70.0	70.0	70.0	70.0	70.0
66		70.0	70.0	70.0	70.0	70.0	70.0
48	90	70.0	70.0	70.0	70.0	70.0	70.0
54		70.0	70.0	70.0	70.0	70.0	70.0
60		70.0	70.0	70.0	70.0	70.0	70.0
48	96	70.0	70.0	70.0	70.0	70.0	70.0
54		70.0	70.0	70.0	70.0	70.0	70.0
60		70.0	70.0	70.0	70.0	70.0	70.0
48	100–3/4	70.0	70.0	70.0	70.0	70.0	70.0
54		70.0	70.0	70.0	70.0	70.0	70.0
58–5/8		70.0	70.0	70.0	70.0	70.0	70.0

POCKETED OR NON–POCKETED DOORS
SEE SHEETS 5 THRU 8 FOR APPROVED CONFIGURATIONS.

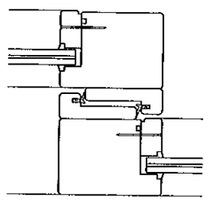

MTG. STILES WITHOUT REINFORCING

DESIGN LOAD CAPACITY – PSF MTG. STILES WITH REINFORCING									
PANEL WIDTH NOMINAL INCHES	DOOR HEIGHT INCHES	GLASS TYPES 'A' & 'B'		GLASS TYPE 'C'		GLASS TYPE 'D'		GLASS TYPE 'E'	
		EXT.(+)	INT.(–)	EXT.(+)	INT.(–)	EXT.(+)	INT.(–)	EXT.(+)	INT.(–)
48	80	70.0	70.0	70.0	70.0	70.0	70.0	70.0	70.0
54		70.0	70.0	70.0	70.0	70.0	70.0	70.0	70.0
60		70.0	70.0	70.0	70.0	70.0	70.0	70.0	70.0
66		70.0	70.0	70.0	70.0	70.0	70.0	70.0	70.0
72		70.0	70.0	70.0	70.0	70.0	70.0	70.0	70.0
48	84	70.0	70.0	70.0	70.0	70.0	70.0	70.0	70.0
54		70.0	70.0	70.0	70.0	70.0	70.0	70.0	70.0
60		70.0	70.0	70.0	70.0	70.0	70.0	70.0	70.0
66		70.0	70.0	70.0	70.0	70.0	70.0	70.0	70.0
72		70.0	70.0	70.0	70.0	–	–	70.0	70.0
48	90	70.0	70.0	70.0	70.0	70.0	70.0	70.0	70.0
54		70.0	70.0	70.0	70.0	70.0	70.0	70.0	70.0
60		70.0	70.0	70.0	70.0	70.0	70.0	70.0	70.0
66		70.0	70.0	70.0	70.0	–	–	70.0	70.0
72		68.0	68.0	70.0	70.0	–	–	70.0	70.0
48	96	70.0	70.0	70.0	70.0	70.0	70.0	70.0	70.0
54		70.0	70.0	70.0	70.0	70.0	70.0	70.0	70.0
60		70.0	70.0	70.0	70.0	70.0	70.0	70.0	70.0
66		67.4	67.4	70.0	70.0	–	–	70.0	70.0
72		65.3	65.3	70.0	70.0	–	–	70.0	70.0
48	102	70.0	70.0	70.0	70.0	70.0	70.0	70.0	70.0
54		70.0	70.0	70.0	70.0	70.0	70.0	70.0	70.0
60		67.5	67.5	70.0	70.0	–	–	70.0	70.0
66		64.6	64.6	70.0	70.0	–	–	70.0	70.0
48	108	70.0	70.0	70.0	70.0	70.0	70.0	70.0	70.0
54		70.0	70.0	70.0	70.0	70.0	70.0	70.0	70.0
60		63.7	63.7	70.0	70.0	–	–	70.0	70.0
66		60.1	60.1	70.0	70.0	–	–	70.0	70.0
48	114	70.0	70.0	70.0	70.0	70.0	70.0	70.0	70.0
54		66.5	66.5	70.0	70.0	–	–	70.0	70.0
60		60.9	60.9	70.0	70.0	–	–	70.0	70.0
48	120	70.0	70.0	70.0	70.0	70.0	70.0	70.0	70.0
54		63.4	63.4	70.0	70.0	–	–	70.0	70.0
60		57.2	57.2	70.0	70.0	–	–	70.0	70.0
48	124–3/4	–	–	–	–	–	–	70.0	70.0
54		–	–	–	–	–	–	70.0	70.0
60		–	–	–	–	–	–	70.0	70.0

POCKETED OR NON–POCKETED DOORS
SEE SHEETS 5 THRU 8 FOR APPROVED CONFIGURATIONS.

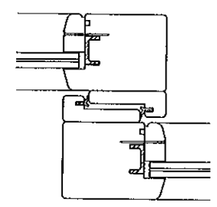

MTG. STILES WITH REINFORCING

NOTE:
GLASS CAPACITIES ON THIS SHEET ARE BASED ON ASTM E1300–04 (3 SEC. GUSTS) AND FLORIDA BUILDING COMMISSION DECLARATORY STATEMENT DCA05–DEC–219

Engr: JAVAD AHMAD
CIVIL
FLA. PE # 70592
C.A.N. 3538

JUN 03 2011

PRODUCT REVISED
as complying with the Florida Building Code
Acceptance No 11-0303.01
Expiration Date 11/15/2012
By
Miami Dade Product Control

AL-FAROOQ CORPORATION
ENGINEERS & PRODUCT DEVELOPMENT
1235 S.W. 87 AVE
MIAMI, FLORIDA 33174
TEL. (305) 264-8100 FAX. (305) 262-6978
COMP–ANL\W07–16HWD

EUROPEAN WOOD LIFT/SLIDE GLASS DOOR (L.M.I.)

HARTMAN WINDOWS & DOORS, LLC
531 SOUTHERN BLVD.
WEST PALM BEACH, FL 33405
TEL. (561) 296–9600 FAX. (561) 296–9601

revisions:

no	date	by	description
A	03.26.09		UPDATED FOR 2007 FBC
B	10.19.09		REV. PER BCCO COMMENTS
C	02.08.11		GENERAL REVISION
D	05.27.11		NO CHANGE THIS SHEET

date: 05–17–07
scale: 3/8" = 1"
dr. by: HAMID
chk. by:

drawing no.
W07–47

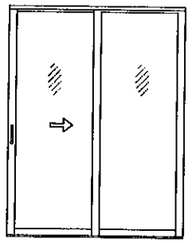

XO (SHOWN)
OX

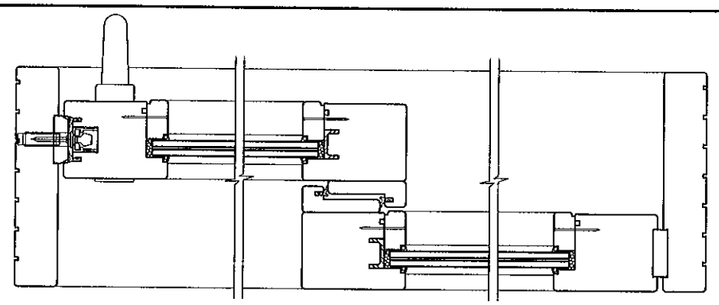

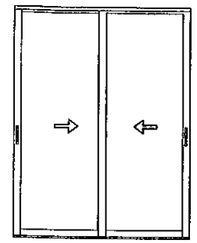

XX

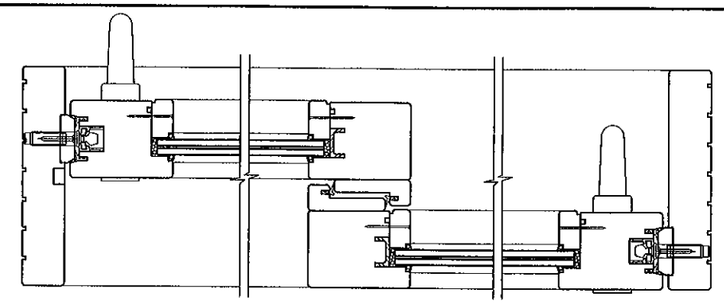

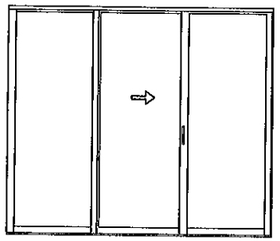

OXO

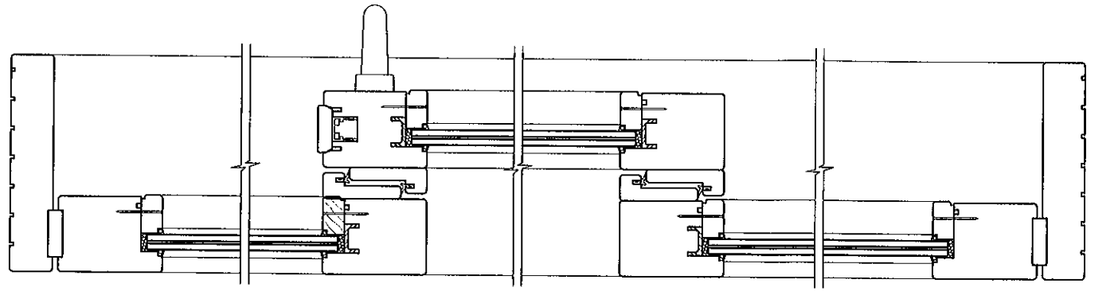

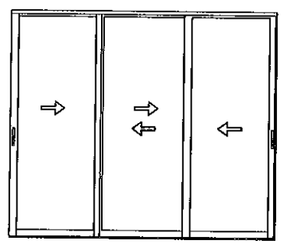

XXX

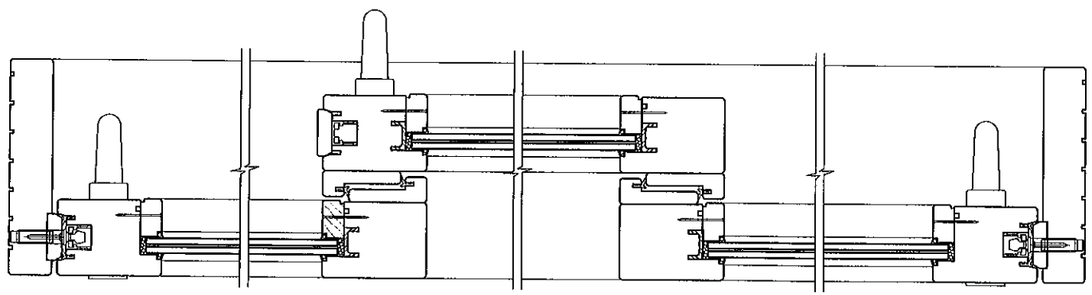

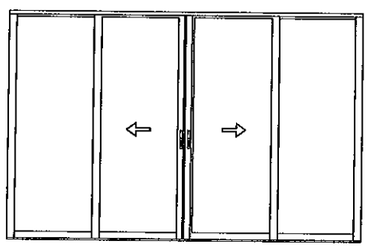

OXXO

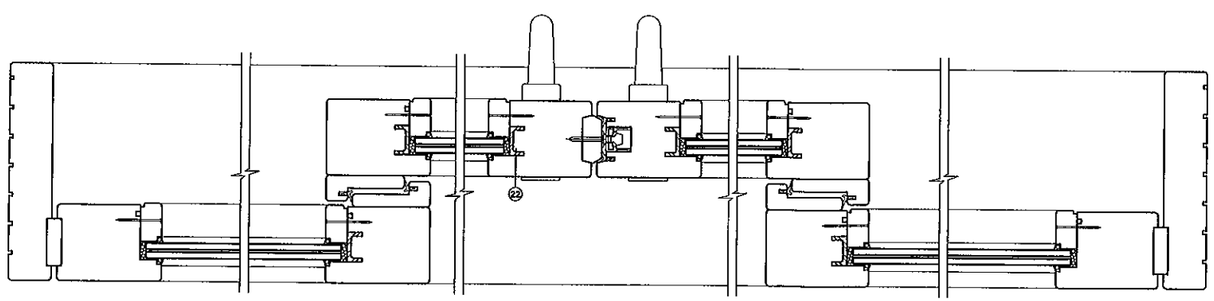

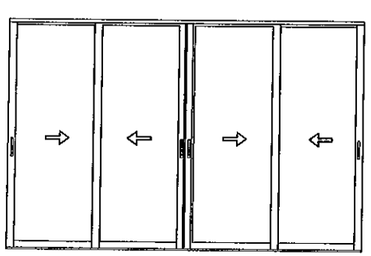

XXXX

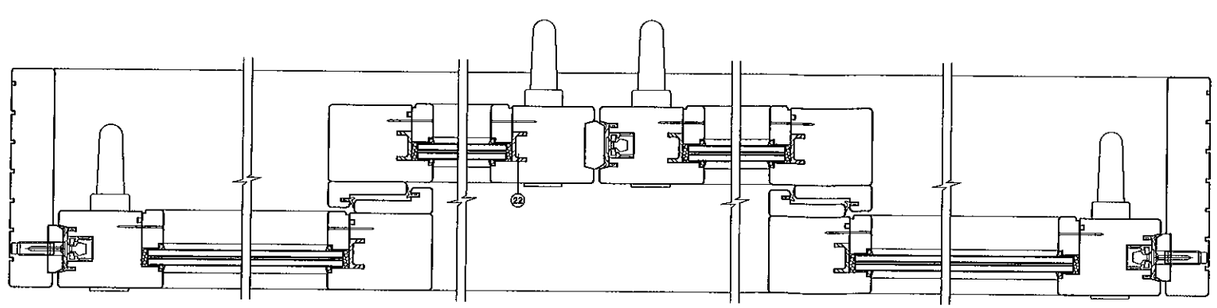

APPROVED CONFIGURATIONS (NON-POCKETED DOORS) (2 TRACK)

Engr: JAVAD AHMAD
CIVIL
FLA. PE # 70592
C.A.N. 3538

JUN 03 2011

PRODUCT REVISED
as complying with the Florida
Building Code
Acceptance No 11-0303.01
Expiration Date 11/15/2012
By
Miami Dade Product Control

AL-FAROOQ CORPORATION
ENGINEERS & PRODUCT DEVELOPMENT
1235 S.W. 87 AVE
MIAMI, FLORIDA 33174
TEL. (305) 264-8100 FAX. (305) 262-6978

COMP-ANL\W07-16HWD

EUROPEAN WOOD LIFT/SLIDE GLASS DOOR (L.M.I.)

HARTMAN WINDOWS & DOORS, LLC
531 SOUTHERN BLVD.
WEST PALM BEACH, FL 33405
TEL. (561) 296-9600 FAX. (561) 296-9601

revisions:

no	date	by	description
B	10.19.09		REV. PER BCCO COMMENTS
C	02.08.11		GENERAL REVISION
D	05.27.11		NO CHANGE THIS SHEET

date: 05-17-07
scale: 3/8" = 1"
dr. by: HAMID
chk. by:

drawing no.
W07-47

sheet 5 of 18

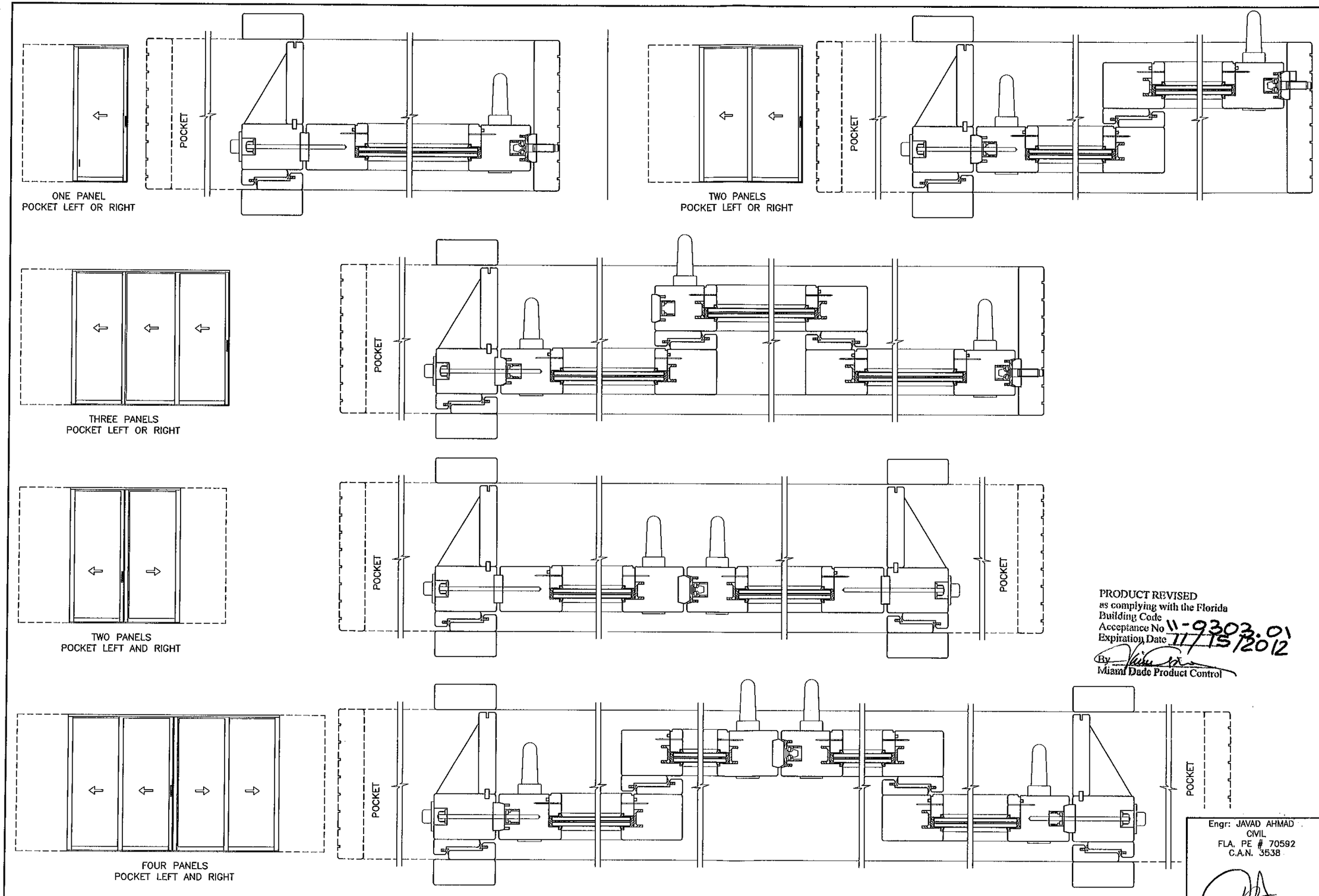

PRODUCT REVISED
as complying with the Florida
Building Code
Acceptance No 11-9303.01
Expiration Date 11/15/2012
By
Miami Dade Product Control

Engr: JAVAD AHMAD
CIVIL
FLA. PE # 70592
C.A.N. 3538

JUN 03 2011

APPROVED CONFIGURATIONS (POCKETED DOORS) (1 OR 2 TRACKS)

POCKET CAVITIES NOT BY HARTMAN.
MUST BE PROTECTED BY IMPACT RESISTANT STRUCTURE
AND TO BE REVIEWED BY AHJ.

AL-FAROOQ CORPORATION
ENGINEERS & PRODUCT DEVELOPMENT
1235 S.W. 87 AVE
MIAMI, FLORIDA 33174
TEL. (305) 264-8100 FAX. (305) 262-6978
COMP-ANL\W07-16HWD

EUROPEAN WOOD LIFT/SLIDE GLASS DOOR (L.M.I.)

HARTMAN WINDOWS & DOORS, LLC
531 SOUTHERN BLVD.
WEST PALM BEACH, FL 33405
TEL. (561) 296-9600 FAX. (561) 296-9601

revisions:

no	date	by	description
B	10.19.09		REV. PER BCCO COMMENTS
C	02.08.11		GENERAL REVISION
D	05.27.11		REV. PER BNC COMMENTS

date: 05-17-07
scale: 3/8" = 1"
dr. by: HAMID
chk. by:

drawing no.
W07-47

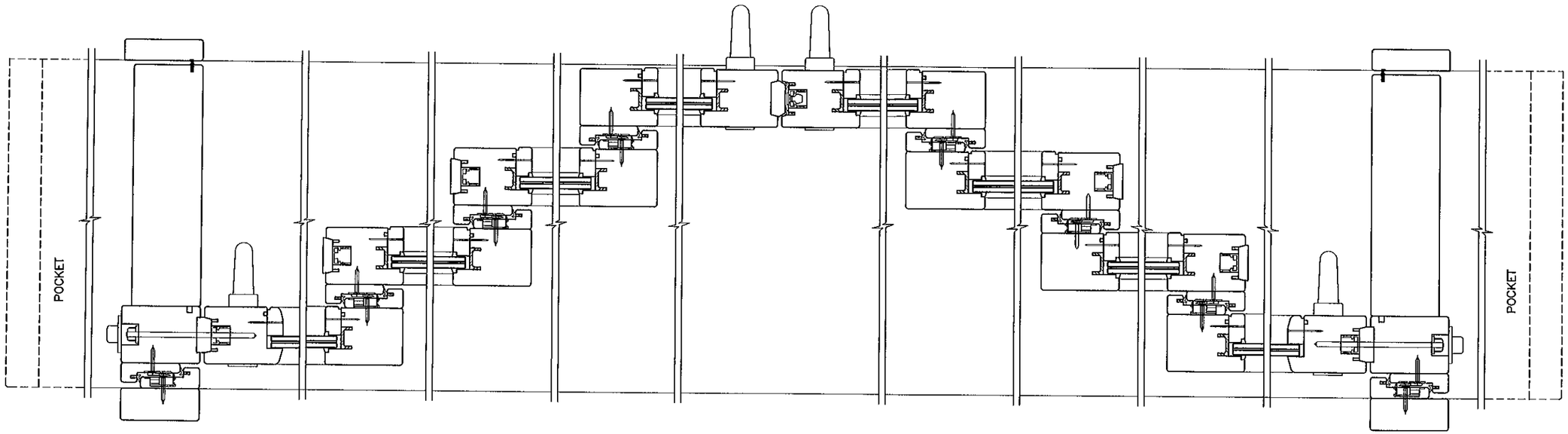

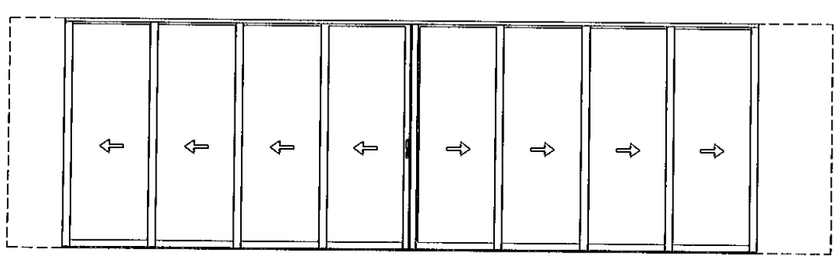

APPROVED CONFIGURATION (4 TRACK)

4 TRACK POCKETED DOOR WITH 8 PANELS SHOWN,
POCKETED OR NON-POCKETED DOORS OF MORE THAN FOUR PANELS
USING STILE CONFIGURATIONS SHOWN ABOVE MAY ALSO BE APPROVED.

POCKET CAVITIES NOT BY HARTMAN.
MUST BE PROTECTED BY IMPACT RESISTANT STRUCTURE
AND TO BE REVIEWED BY AHJ.

Engr: JAVAD AHMAD
CIVIL
FLA. PE # 70592
C.A.N. 3538

JUN 03 2011

PRODUCT REVISED
as complying with the Florida
Building Code
Acceptance No 11-0303.01
Expiration Date 11/15/2012
By
Miami Dade Product Control

AL-FAROOQ CORPORATION
ENGINEERS & PRODUCT DEVELOPMENT
1235 S.W. 87 AVE
MIAMI, FLORIDA 33174
TEL. (305) 264-8100 FAX. (305) 262-6978
COMP-ANL\W07-16HWD

EUROPEAN WOOD LIFT/SLIDE GLASS DOOR (L.M.I.)

HARTMAN WINDOWS & DOORS, LLC
531 SOUTHERN BLVD.
WEST PALM BEACH, FL 33405
TEL. (561) 296-9600 FAX. (561) 296-9601

revisions:

no	date	by	description
C	02.08.11		GENERAL REVISION
D	05.27.11		REV. PER BNC COMMENTS

date: 05-17-07
scale: 3/8" = 1"
dr. by: HAMID
chk. by:

drawing no.
W07-47

sheet 7 of 18

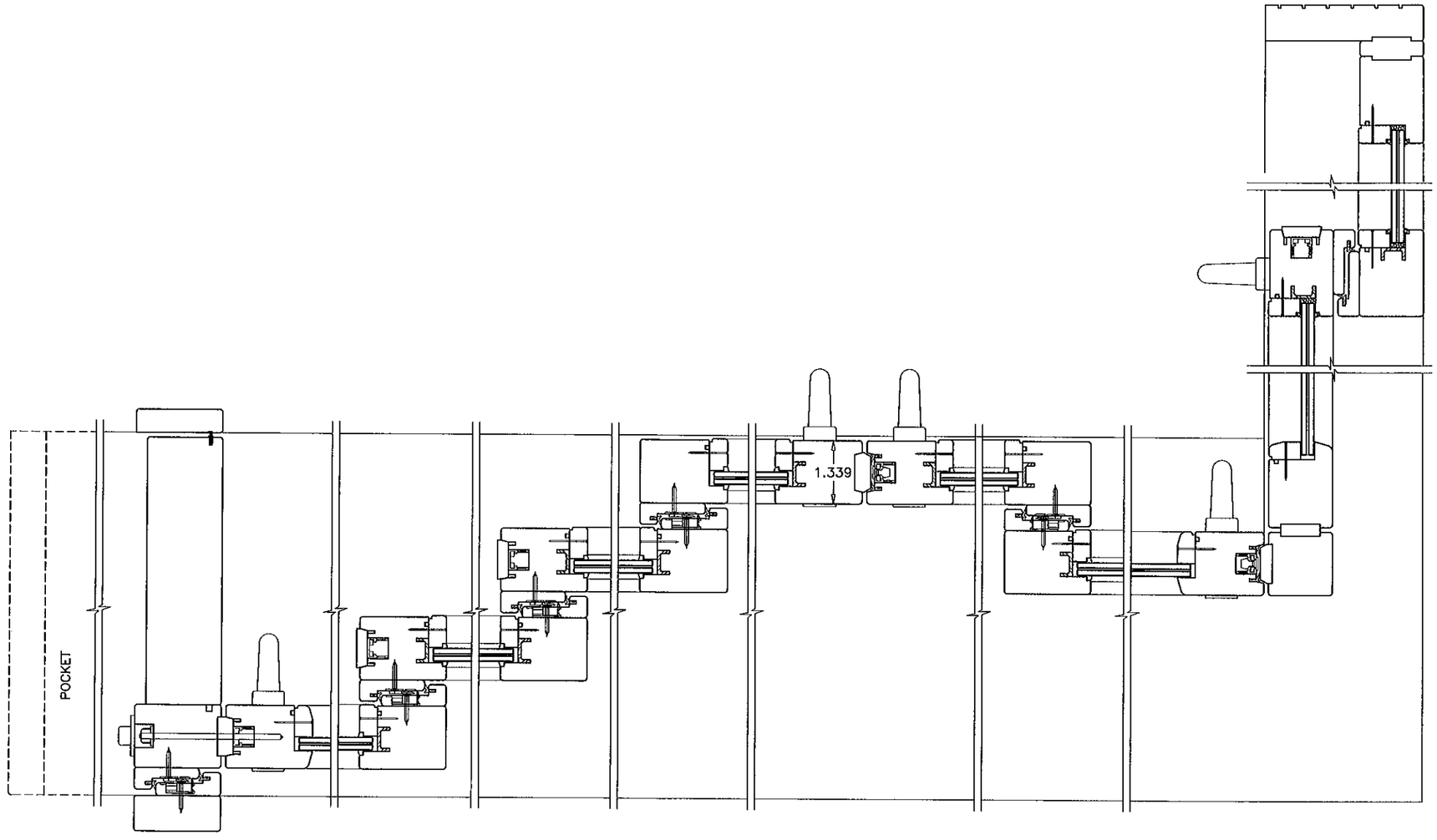

POCKET CAVITIES NOT BY HARTMAN.
MUST BE PROTECTED BY IMPACT RESISTANT STRUCTURE
AND TO BE REVIEWED BY AHJ.

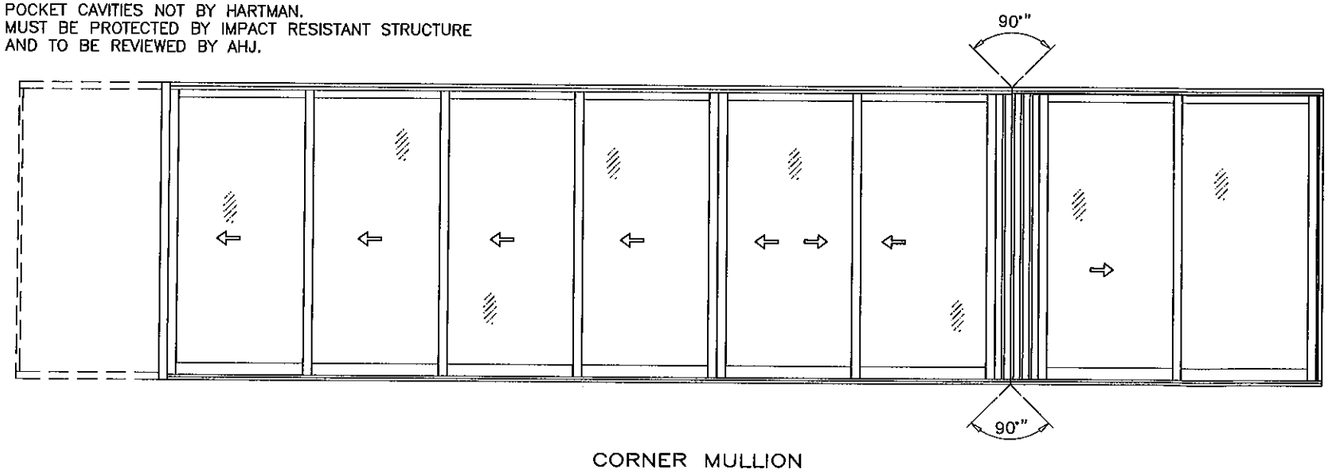

CORNER MULLION

CORNER MULLION MAY BE USED WITH ANY 2 OR 4 TRACK POCKETED AND NON-POCKETED DOOR CONFIGURATIONS SHOWN ON SHEETS 5 THRU 7.

Engr: JAVAD AHMAD
CIVIL
FLA. PE # 70592
C.A.N. 3538

JUN 03 2011

PRODUCT REVISED
as complying with the Florida
Building Code
Acceptance No 11-0303.01
Expiration Date 11/15/2012
By
Miami Dade Product Control

AL-FAROOQ CORPORATION
ENGINEERS & PRODUCT DEVELOPMENT
1235 S.W. 87 AVE
MIAMI, FLORIDA 33174
TEL. (305) 264-8100 FAX. (305) 262-6978
COMP-ANL\W07-16HWD

EUROPEAN WOOD LIFT/SLIDE GLASS DOOR (L.M.I.)

HARTMAN WINDOWS & DOORS, LLC
531 SOUTHERN BLVD.
WEST PALM BEACH, FL 33405
TEL. (561) 296-9600 FAX. (561) 296-9601

revisions:

no	date	by	description
C	02.08.11		GENERAL REVISION
D	05.27.11		REV. PER BNC COMMENTS

date: 05-17-07
scale: 3/8" = 1"
dr. by: HAMID
chk. by:

drawing no.
W07-47

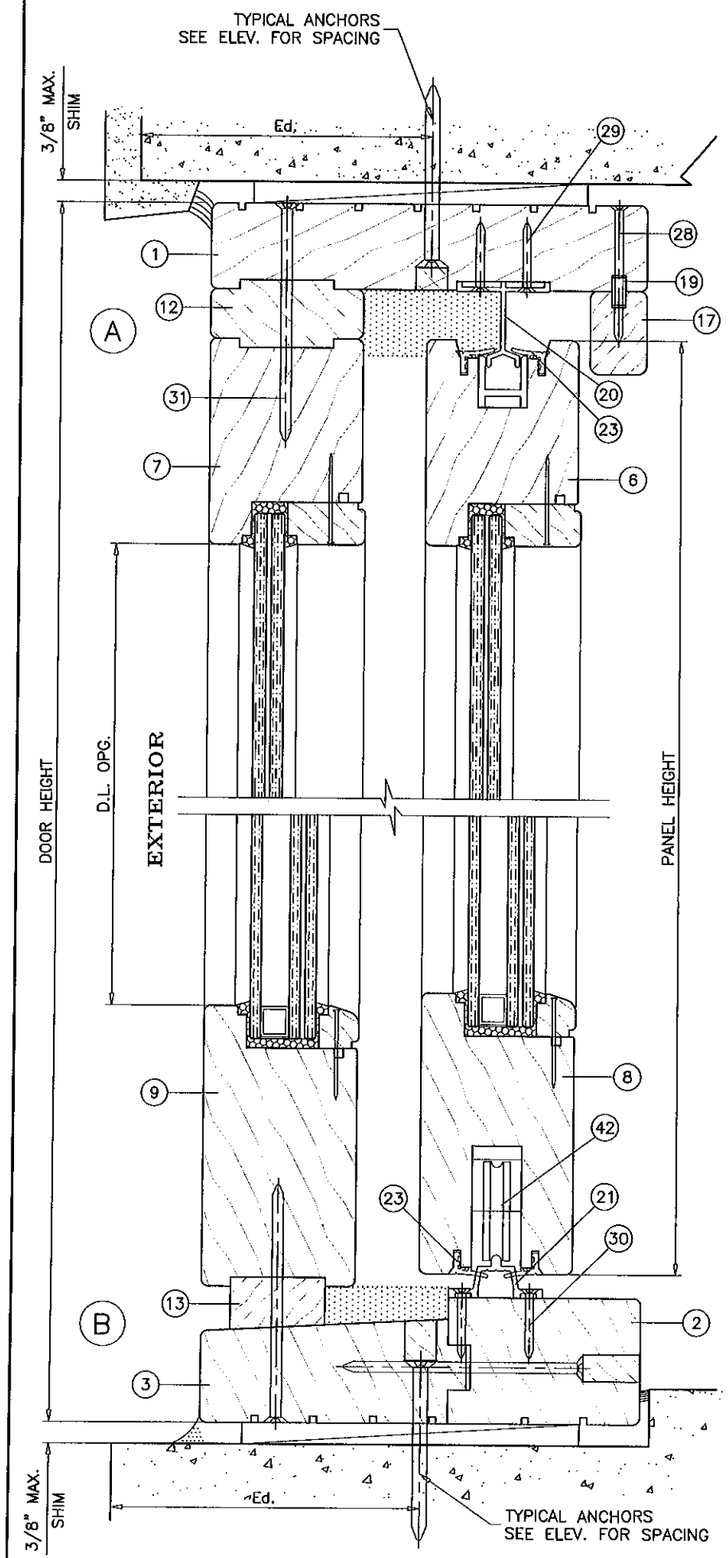

NON-POCKETED DOORS

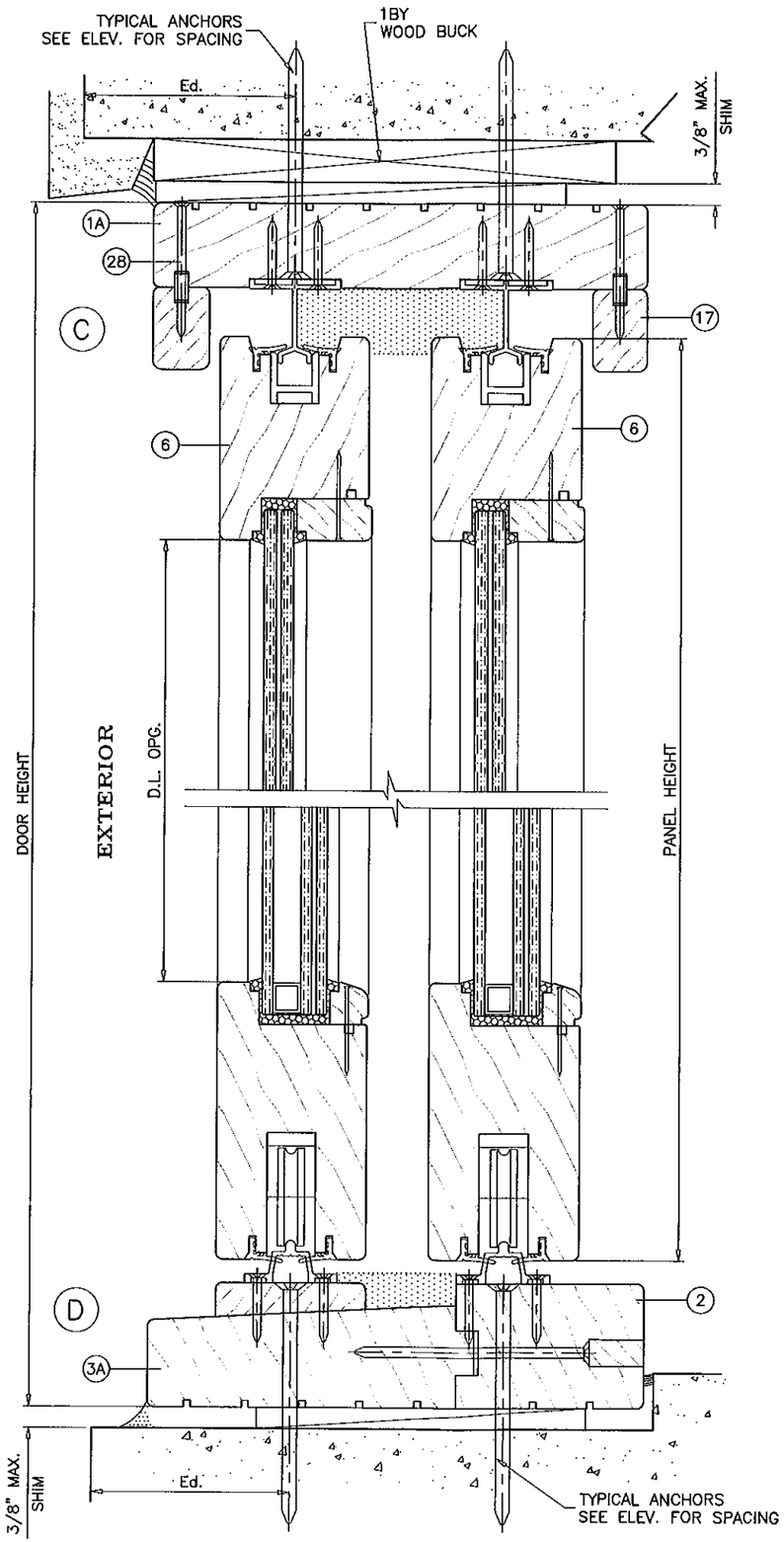

POCKETED DOORS

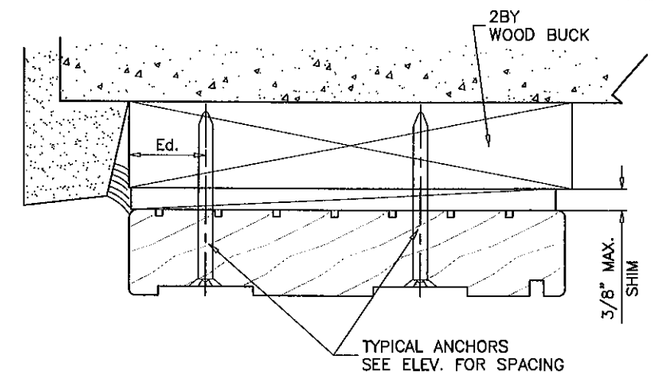

WOOD BUCKS NOT BY HARTMAN WINDOWS, MUST SUSTAIN LOADS IMPOSED BY GLAZING SYSTEM AND TRANSFER THEM TO THE BUILDING STRUCTURE.

TYPICAL ANCHORS: SEE ELEV. FOR SPACING

1/4" DIA. ULTRACON BY 'ELCO' (Fu=177 KSI, Fy=155 KSI)

INTO 2BY WOOD BUCKS OR WOOD STRUCTURES
1-3/8" MIN. PENETRATION INTO WOOD

THRU 1BY BUCKS INTO CONC. OR MASONRY
1-1/4" MIN. EMBED INTO CONC. OR MASONRY

DIRECTLY INTO CONC. OR MASONRY
1-1/4" MIN. EMBED INTO CONC. OR MASONRY

Ed = ANCHOR EDGE DISTANCES

INTO CONCRETE AND MASONRY = 2" MIN.
INTO WOOD STRUCTURE = 1" MIN.

ANCHORS CL TO CL DISTANCE

INTO CONCRETE AND MASONRY = 3" MIN.
INTO WOOD STRUCTURE = 3/4" MIN.

CONCRETE AT HEAD, SILL OR JAMBS f'c = 3000 PSI MIN.
C-90 HOLLOW/FILLED BLOCK AT JAMBS f'm = 2000 PSI MIN.

2 TRACK DOOR DETAILS

Engr: JAVAD AHMAD
CIVIL
FLA. PE # 70592
C.A.N. 3538
JUN 03 2011

PRODUCT REVISED
re complying with the Florida
Building Code
Acceptance No 11-0303.01
Expiration Date 11/15/2012
By
Miami Dade Product Control

AL-FAROOQ CORPORATION
ENGINEERS & PRODUCT DEVELOPMENT
1235 S.W. 87 AVE
MIAMI, FLORIDA 33174
TEL. (305) 264-8100 FAX. (305) 262-6978
COMP-ANL\W07-16HWD

EUROPEAN WOOD LIFT/SLIDE GLASS DOOR (L.M.I.)

HARTMAN WINDOWS & DOORS, LLC
531 SOUTHERN BLVD.
WEST PALM BEACH, FL 33405
TEL. (561) 296-9600 FAX. (561) 296-9601

revisions:

no	date	by	description
A	03.26.09		ANCHORS REV.
B	10.19.09		REV. PER BCCO COMMENTS
C	02.08.11		GENERAL REVISION
D	05.27.11		REV. PER BNC COMMENTS

date: 05-17-07
scale: 3/8" = 1"
dr. by: HAMID
chk. by:

drawing no.
W07-47

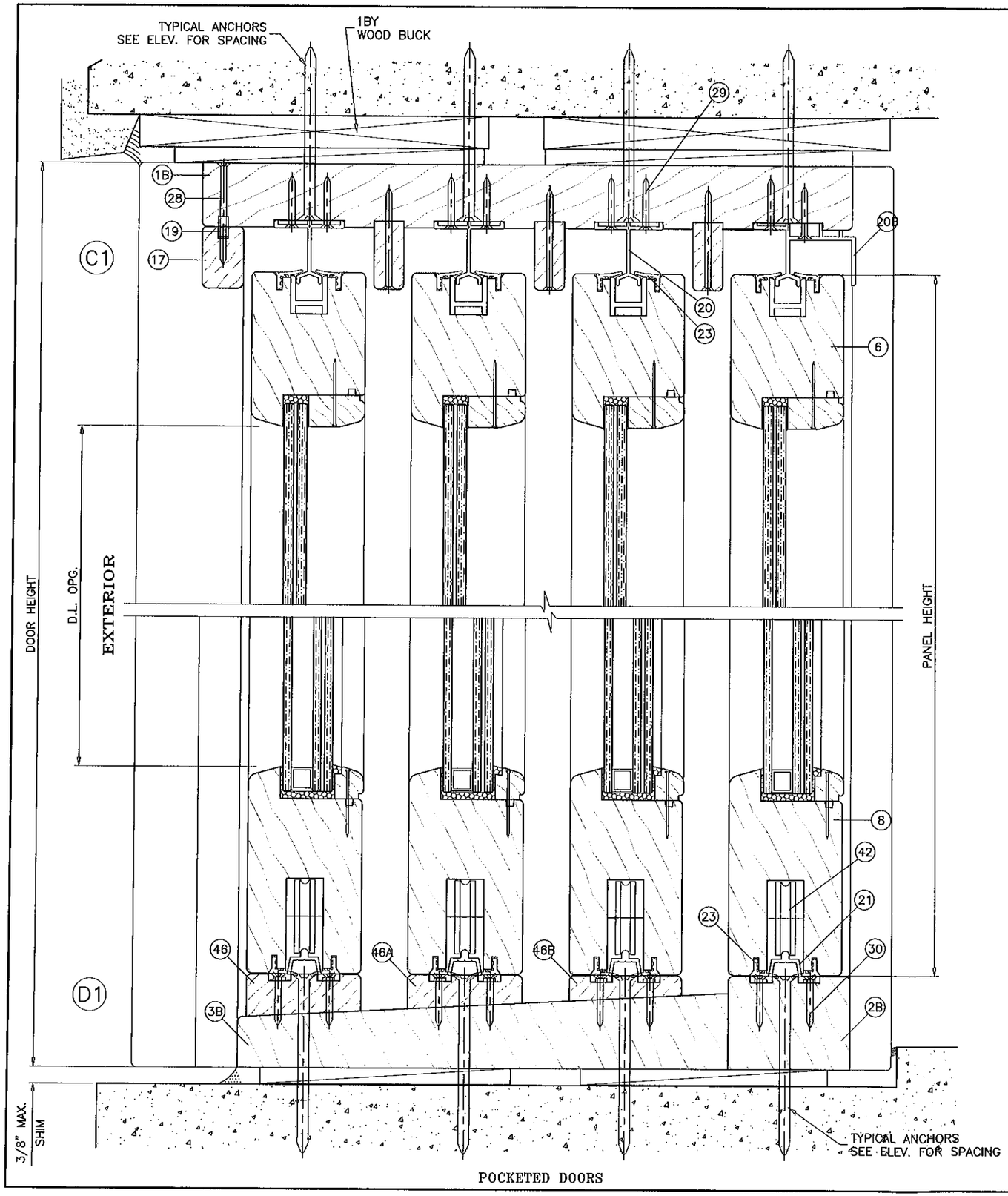

POCKETED DOORS

4 TRACK DOOR DETAILS

Engr: JAVAD AHMAD
CIVIL
FLA. PE # 70592
C.A.N. 3538

JUN 03 2011

PRODUCT REVISED
as complying with the Florida
Building Code
Acceptance No 11-0203.01
Expiration Date 11/15/2012
By
Miami Dade Product Control

AL-FAROOQ CORPORATION
ENGINEERS & PRODUCT DEVELOPMENT
1235 S.W. 87 AVE
MIAMI, FLORIDA 33174
TEL. (305) 264-8100 FAX. (305) 262-6978
COMP-ANL\W07-16HWD

EUROPEAN WOOD LIFT/SLIDE GLASS DOOR (L.M.I.)

HARTMAN WINDOWS & DOORS, LLC
531 SOUTHERN BLVD.
WEST PALM BEACH, FL 33405
TEL. (561) 296-9600 FAX. (561) 296-9601

revisions:

no	date	by	description
C	02.08.11		GENERAL REVISION
D	05.27.11		REV. PER BNC COMMENTS

date: 05-17-07
scale: 3/8" = 1"
dr. by: HAMID
chk. by:

drawing no.
W07-47

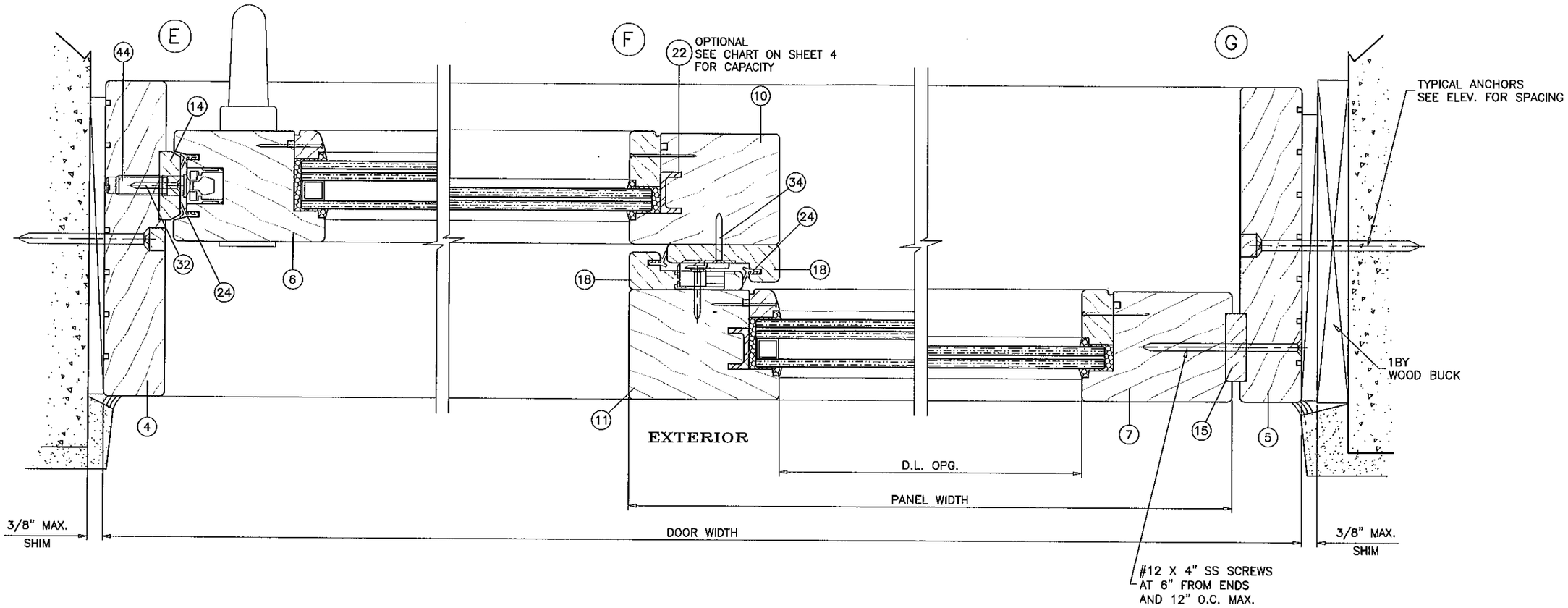

2 TRACK DOOR DETAILS

Engr: JAVAD AHMAD
CIVIL
FLA. PE # 70592
C.A.N. 3538

JUN 03 2011

PRODUCT REVISED
as complying with the Florida
Building Code
Acceptance No 11-0303.01
Expiration Date 11/15/28/2
By
Miami Dade Product Control

AL-FAROOQ CORPORATION
ENGINEERS & PRODUCT DEVELOPMENT
1235 S.W. 87 AVE
MIAMI, FLORIDA 33174
TEL. (305) 264-8100 FAX. (305) 262-6978
COMP-ANL\W07-16HWD

EUROPEAN WOOD LIFT/SLIDE GLASS DOOR (L.M.I.)

HARTMAN WINDOWS & DOORS, LLC
531 SOUTHERN BLVD.
WEST PALM BEACH, FL 33405
TEL. (561) 296-9600 FAX. (561) 296-9601

revisions:

no	date	by	description
A	03.26.09		NO CHANGE THIS SHEET
B	10.19.09		REV. PER BCCO COMMENTS
C	02.08.11		GENERAL REVISION
D	05.27.11		REV. PER BNC COMMENTS

date: 05-17-07
scale: 3/8" = 1"
dr. by: HAMID
chk. by:

drawing no.
W07-47

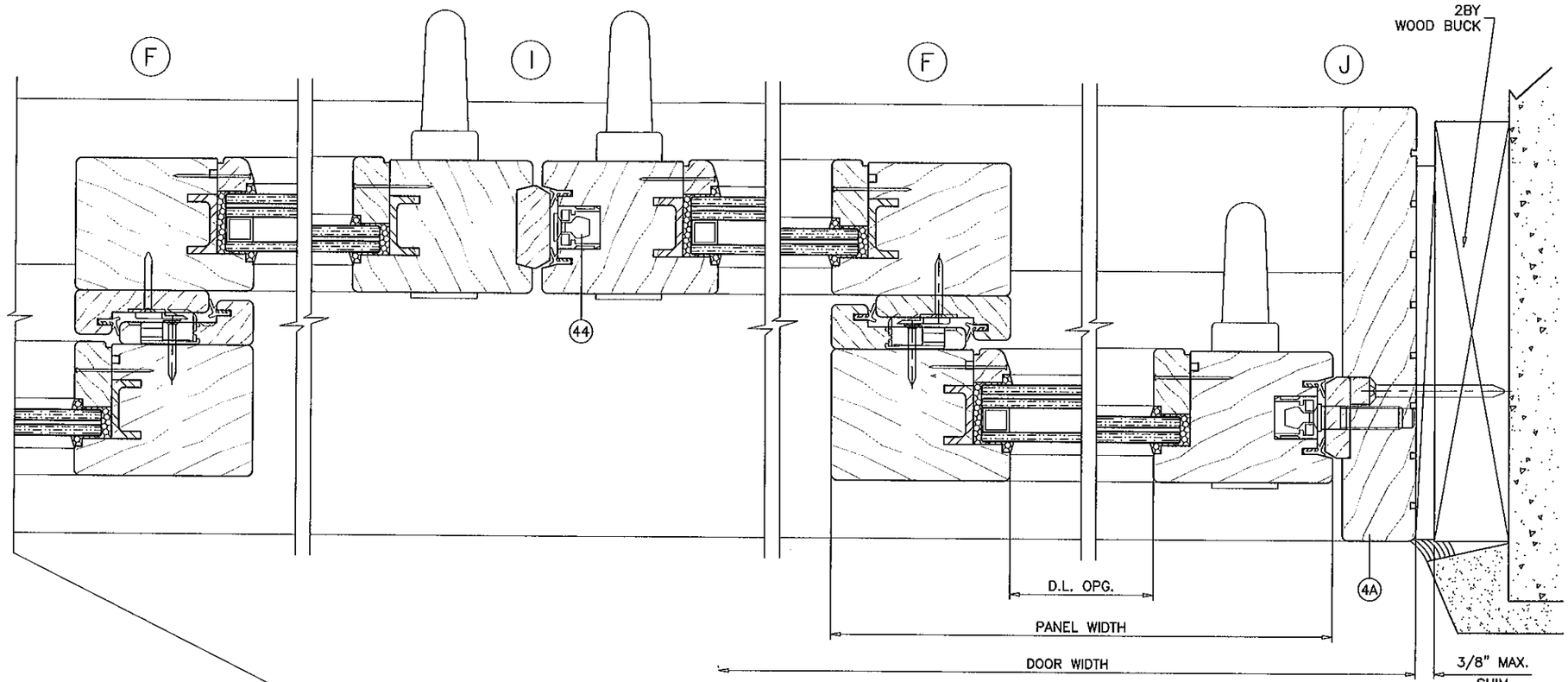

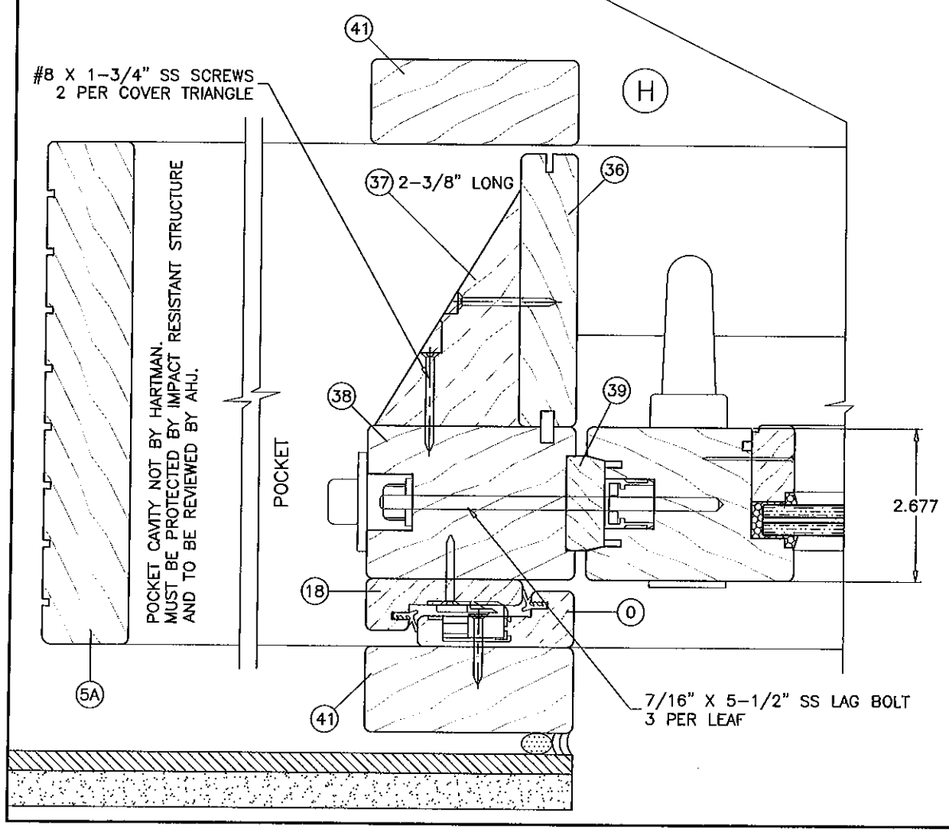

2 TRACK DOOR DETAILS

Engr: JAVAD AHMAD
CIVIL
FLA. PE # 70592
C.A.N.: 3538

JUL 03 2011

PRODUCT REVISED
as complying with the Florida
Building Code
Acceptance No 11-0303.01
Expiration Date 11/12/2012
By
Miami Dade Product Control

AL-FAROOQ CORPORATION
ENGINEERS & PRODUCT DEVELOPMENT
1235 S.W. 87 AVE
MIAMI, FLORIDA 33174
TEL. (305) 264-8100 FAX. (305) 262-6978
COMP-ANL\W07-16HWD

EUROPEAN WOOD LIFT/SLIDE GLASS DOOR (L.M.I.)

HARTMAN WINDOWS & DOORS, LLC
531 SOUTHERN BLVD.
WEST PALM BEACH, FL 33405
TEL. (561) 296-9600 FAX. (561) 296-9601

revisions:

no	date	by	description
A	03.26.09		NO CHANGE THIS SHEET
B	10.19.09		REV. PER BCCO COMMENTS
C	02.08.11		GENERAL REVISION
D	05.27.11		REV. PER BNC COMMENTS

date: 05-17-07
scale: 3/8" = 1"
dr. by: HAMID
chk. by:

drawing no.
W07-47

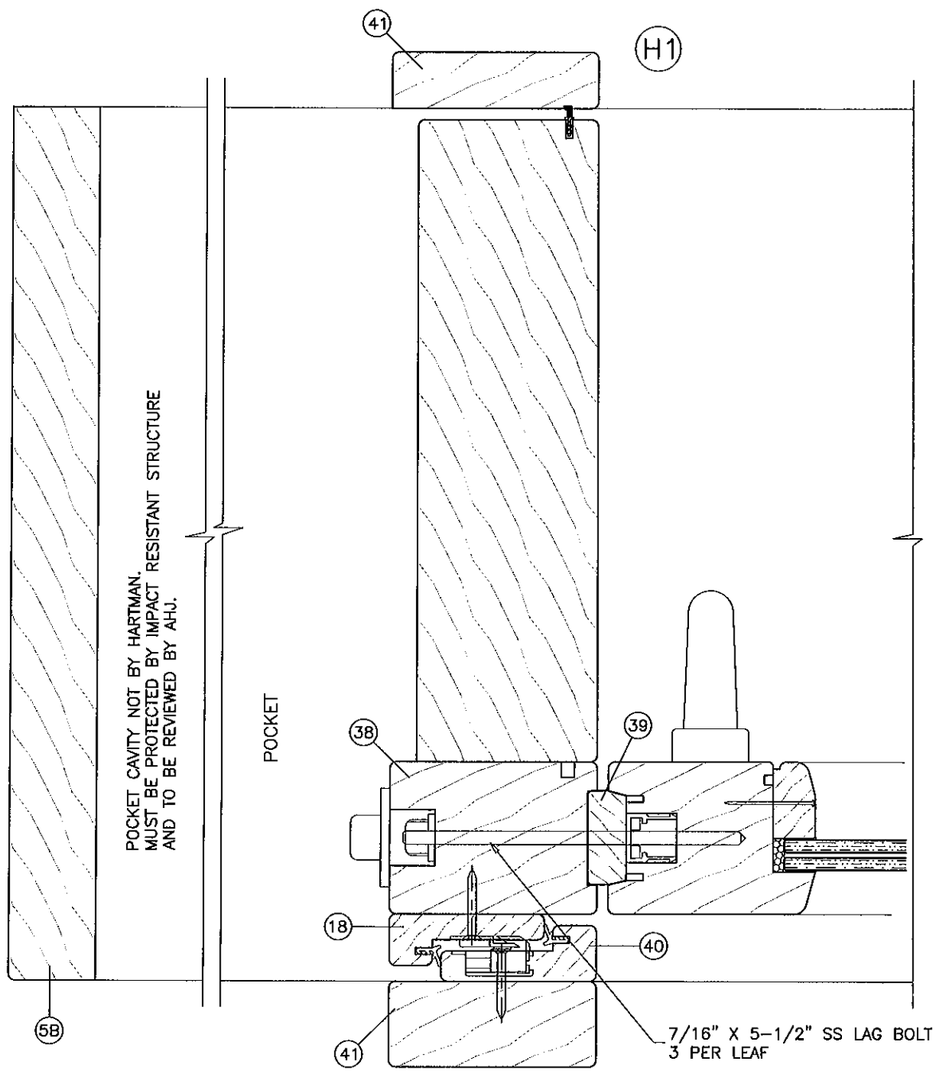

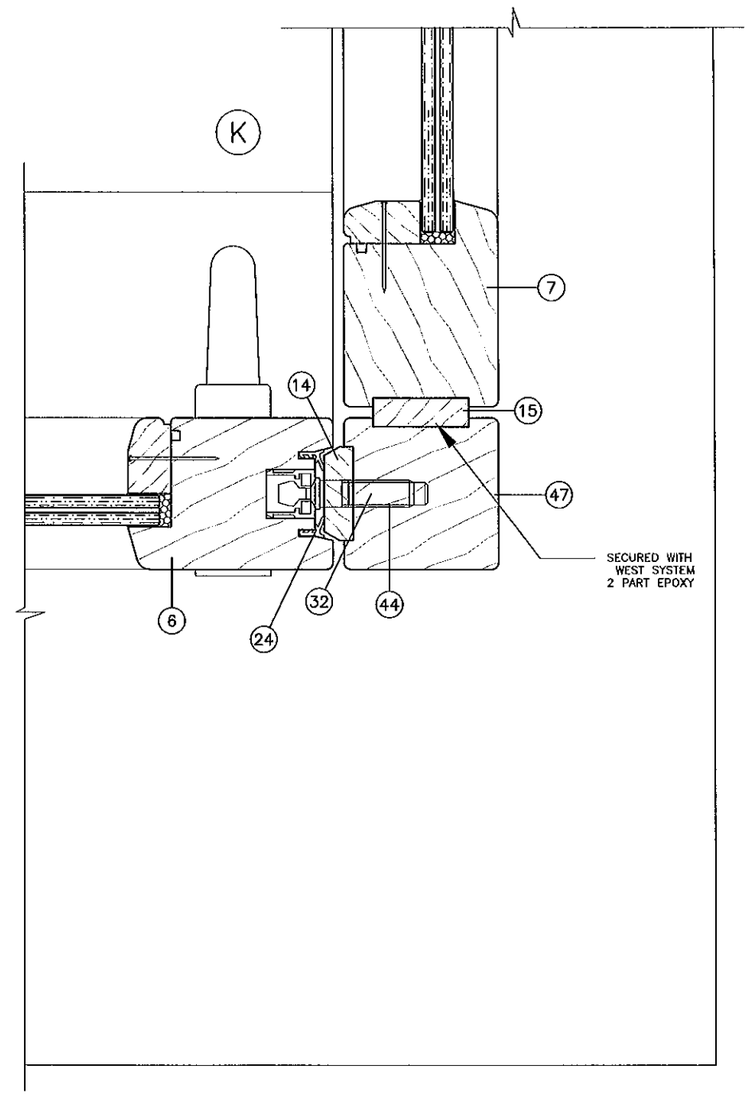

Engr: JAVAD AHMAD
CIVIL
FLA. PE # 70592
C.A.N. 3538

JUN 03 2011

PRODUCT REVISED
as complying with the Florida
Building Code
Acceptance No 11-0303.01
Expiration Date 11/15/2012
By
Miami Dade Product Control

AL-FAROOQ CORPORATION
ENGINEERS & PRODUCT DEVELOPMENT
1235 S.W. 87 AVE
MIAMI, FLORIDA 33174
TEL. (305) 264-8100 FAX. (305) 262-6978
COMP-ANL\W07-16HWD

EUROPEAN WOOD LIFT/SLIDE GLASS DOOR (L.M.I.)

HARTMAN WINDOWS & DOORS, LLC
531 SOUTHERN BLVD.
WEST PALM BEACH, FL 33405
TEL. (561) 296-9600 FAX. (561) 296-9601

revisions:

no	date	by	description
C	02.08.11		GENERAL REVISION
D	05.27.11		REV. PER BNC COMMENTS

date: 05-17-07
scale: 3/8" = 1"
dr. by: HAMID
chk. by:

drawing no.
W07-47

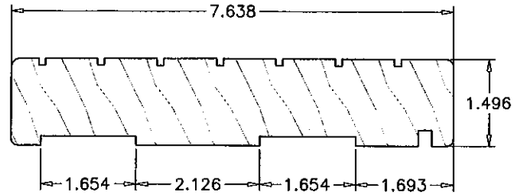

1 FRAME HEAD

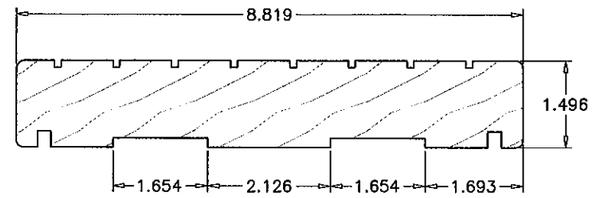

1A ALT. FRAME HEAD

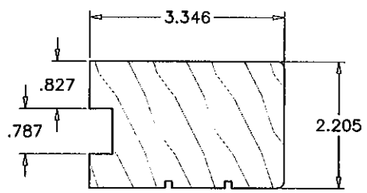

2 FRAME SILL

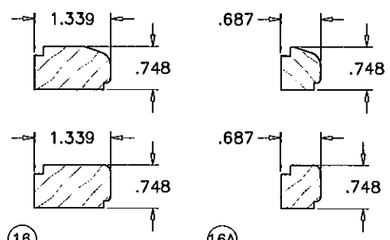

16 GLASS STOPS LAM. GLASS

16A GLASS STOPS LAM. INSUL. GLASS

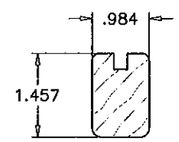

17 JAMB TOP COVER

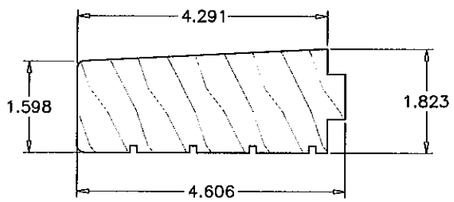

3 SILL EXTENSION

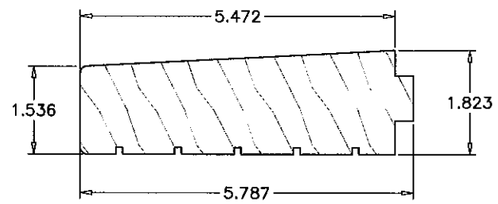

3A ALT. SILL EXTENSION

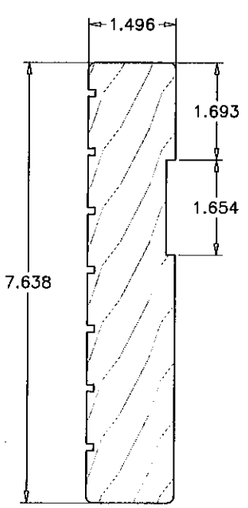

4 FRAME JAMB (OPERATING)

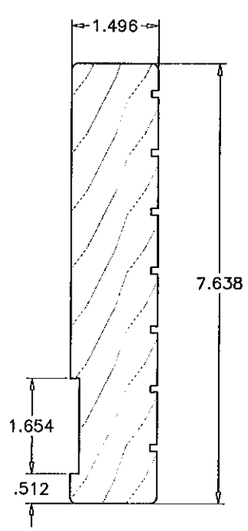

5 FRAME JAMB (FIXED)

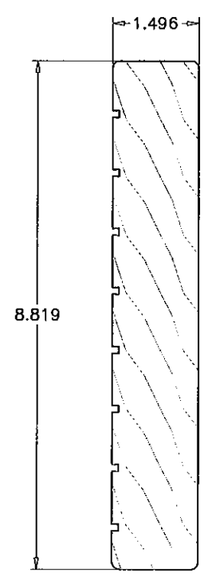

5A FRAME JAMB (POCKET)

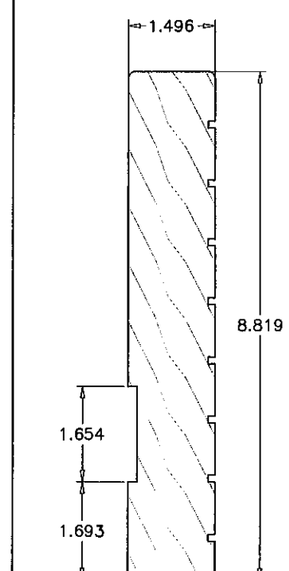

4A ALT. FRAME JAMB (OPERATING)

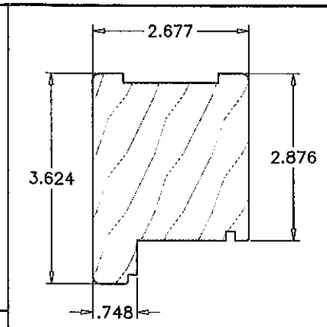

7 TOP RAIL (FIXED)

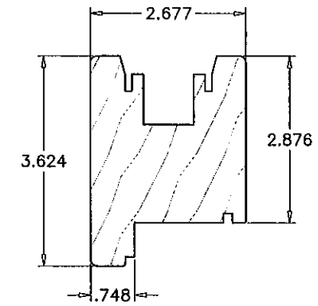

6 TOP RAIL (OPERATING)

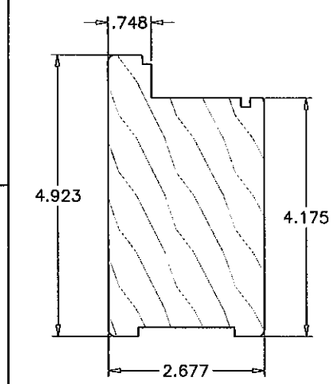

9 BOTTOM RAIL (FIXED)

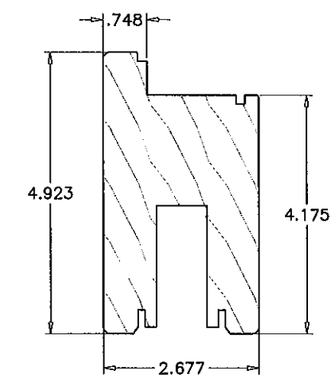

8 BOTTOM RAIL (OPERATING)

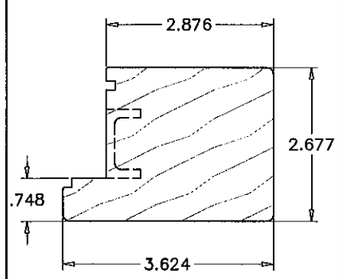

10 MTG. STILE INTERIOR

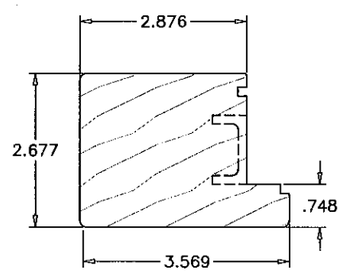

11 MTG. STILE EXTERIOR

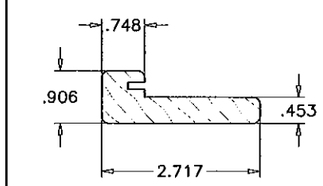

18 MTG. STILE HOOK

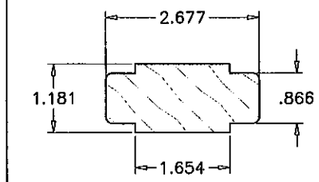

12 FIX. PANEL TOP KEY

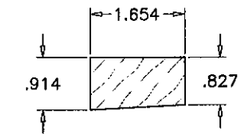

13 FIX. PANEL BOTTOM KEY

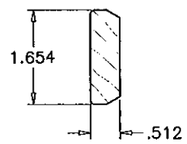

14 OPERATING PANEL SIDE KEY

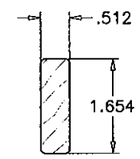

15 FIX. PANEL SIDE KEY

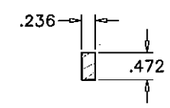

19 SPLINE

Engr: JAVAD AHMAD
CIVIL
FLA. PE # 70592
C.A.N. 3538

JUN 03 2011

PRODUCT REVISED
is complying with the Florida
Building Code
Acceptance No 11-0303.01
Expiration Date 11/15/2012
By
Miami Dade Product Control

AL-FAROOQ CORPORATION
ENGINEERS & PRODUCT DEVELOPMENT
1235 S.W. 87 AVE
MIAMI, FLORIDA 33174
TEL (305) 264-8100 FAX. (305) 262-6978

COMP-ANL\W07-16HWD

EUROPEAN WOOD LIFT/SLIDE GLASS DOOR (L.M.I.)

HARTMAN WINDOWS & DOORS, LLC
531 SOUTHERN BLVD.
WEST PALM BEACH, FL 33405
TEL. (561) 296-9600 FAX. (561) 296-9601

revisions:

no	date	by	description
A	03.26.09		NO CHANGE THIS SHEET
B	10.19.09		REV. PER BCCO COMMENTS
C	02.08.11		GENERAL REVISION
D	05.27.11		NO CHANGE THIS SHEET

date: 05-17-07
scale: 3/8" = 1"
dr. by: HAMID
chk. by:

drawing no.
W07-47

ITEM #	PART #	REQD.	DESCRIPTION	MATERIAL	MANF./SUPPLIER/REMARKS
1	–	1/ DOOR	FRAME HEAD	WOOD	MAHOGANY, SG = 0.45
1A	–	1/ DOOR	ALT. FRAME HEAD	WOOD	MAHOGANY, SG = 0.45
2	–	1/ DOOR	FRAME SILL	WOOD	MAHOGANY, SG = 0.45
3	–	1/ DOOR	SILL EXTENSION	WOOD	MAHOGANY, SG = 0.45
3A	–	1/ DOOR	ALT. SILL EXTENSION	WOOD	MAHOGANY, SG = 0.45
4	–	1/ DOOR	FRAME JAMB (OPERATING)	WOOD	MAHOGANY, SG = 0.45
4A	–	1/ DOOR	ALT. FRAME JAMB (OPERATING)	WOOD	MAHOGANY, SG = 0.45
5	–	1/ DOOR	FRAME JAMB (FIXED)	WOOD	MAHOGANY, SG = 0.45
5A	–	1/ DOOR	FRAME JAMB (POCKET)	WOOD	MAHOGANY, SG = 0.45
6	–	1/ PANEL	TOP RAIL/JAMB STILE (OPERATING)	WOOD	MAHOGANY, SG = 0.45
7	–	1/ PANEL	TOP RAIL/JAMB STILE (FIXED)	WOOD	MAHOGANY, SG = 0.45
8	–	1/ PANEL	BOTTOM RAIL (OPERATING)	WOOD	MAHOGANY, SG = 0.45
9	–	1/ PANEL	BOTTOM RAIL (FIXED)	WOOD	MAHOGANY, SG = 0.45
1D	–	1/ PANEL	MTG. STILE INTERIOR	WOOD	MAHOGANY, SG = 0.45
11	–	1/ PANEL	MTG. STILE EXTERIOR	WOOD	MAHOGANY, SG = 0.45
12	–	1	FIX. PANEL TOP KEY	WOOD	MAHOGANY, SG = 0.45
13	–	1	FIX. PANEL BOTTOM KEY	WOOD	MAHOGANY, SG = 0.45
14	–	1	OPERATING PANEL SIDE KEY	WOOD	MAHOGANY, SG = 0.45
15	–	1	FIX. PANEL SIDE KEY	WOOD	MAHOGANY, SG = 0.45
16	–	AS REQD.	GLASS STOP (LAM. GLASS)	WOOD	MAHOGANY, SG = 0.45
16A	–	AS REQD.	GLASS STOP (LAM. INSUL. GLASS)	WOOD	MAHOGANY, SG = 0.45
17	–	AS REQD.	JAMB TOP COVER	WOOD	MAHOGANY, SG = 0.45
18	–	1/ PANEL	MEETING STILE HOOK	WOOD	MAHOGANY, SG = D.45
19	–	AS REQD.	SPLINE	WOOD	MAHOGANY, SG = D.45
20	–	1	EXTRUDED GUIDING RAIL	BRASS	–
20B	–	1	EXTRUDED GUIDING RAIL	BRASS	–
21	–	1	EXTRUDED RUNNING RAIL	BRASS	–
22	–	1/ PANEL	MTG. STILE REINFORCING	STEEL	ASTM A36, Fy 36 KSI
23	9–24571	AS REQD.	EPDM GASKET P742	VINYL	GU–AGB, DUROMETER 60±5
24	9–24572	AS REQD.	EPDM GASKET P743	VINYL	GU–AGB, DUROMETER 60±5
25	V992	AS REQD.	NORTON NORSEAL TAPE	–	TOTAL PLASTICS
27	–	AS REQD.	.048" DIA. X 1–1/2" BRAD NAILS	–	3" FROM ENDS & 8" O.C.
28	–	AS REQD.	#8 X 2–1/4" SCREWS	–	2" FROM ENDS & 12" O.C.
29	–	AS REQD.	#8 X 1–1/4" SCREWS	–	6" FROM ENDS & 8" O.C.
30	–	AS REQD.	#8 X 1–1/2" SCREWS	–	6" FROM ENDS & 8" O.C.
31	–	AS REQD.	#12 X 4" SCREWS	–	3" FROM ENDS & 12" O.C.
32	–	AS REQD.	#8 X 1–1/4" SCREWS	–	3" FROM ENDS & 12" O.C.
33	–	AS REQD.	#12 X 2–1/2" SCREWS	–	3" FROM ENDS & 8" O.C.
34	–	AS REQD.	#8 X 1–1/4" SCREWS	–	2" FROM ENDS & 6" O.C.
36	–	AS REQD.	POCKET COVER	WOOD	MAHOGANY, SG = 0.45
37	–	4/ LEAF	POCKET COVER TRIANGLE	WOOD	MAHOGANY, SG = 0.45
38	–	AS REQD.	POCKET JAMB STILE	WOOD	MAHOGANY, SG = 0.45
39	–	AS REQD.	POCKET KEY	WOOD	MAHOGANY, SG = 0.45
40	–	AS REQD.	POCKET STILE HOOK	WOOD	MAHOGANY, SG = 0.45
41	–	AS REQD.	POCKET JAMB	WOOD	MAHOGANY, SG = 0.45
42	–	2/ PANEL	NYLON WHEELS IN METALLIC HOUSING	–	AT 7" FROM ENDS
43	–	1/ MOV. PANEL	FOUR POINT LOCK SYSTEM	–	LEVER HANDLE AT 39" FROM BOTTOM
44	–	AS REQD.	3/4" LONG LOCK PINS	STEEL	ASTM A36, Fy 36 KSI
45	–	AS REQD.	6–1/4" LONG ANTI–BLOW OUT CLIPS	ALUMINUM	AT INTERLOCK STILES @ 28" O.C.
47		AS REQD.	CORNER SASH STILE	WOOD	MAHOGANY, SG = 0.45
48		AS REQD.	FIX PANEL SIDE KEY	WOOD	MAHOGANY, SG = 0.45

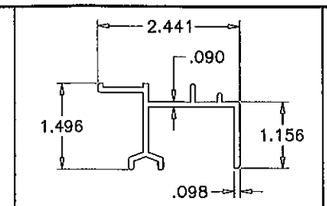

20B EXTRUDED GUIDING RAIL

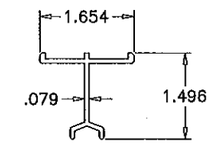

20 EXTRUDED GUIDING RAIL

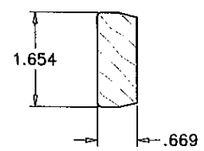

39 POCKET KEY

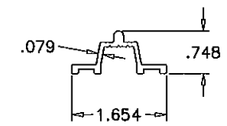

21 EXTRUDED RUNNING RAIL

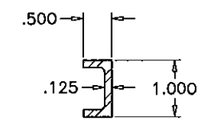

22 MTG. STILE REINFORCING

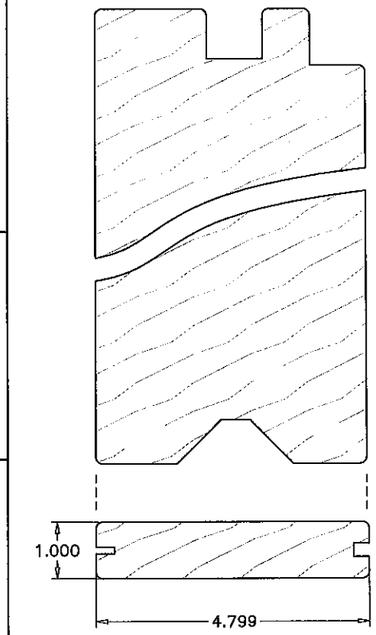

36 POCKET COVER

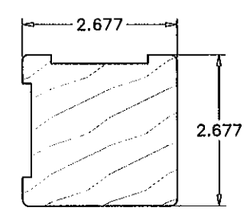

47 CORNER SASH STILE

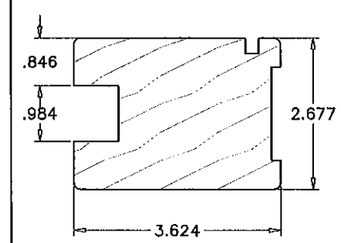

38 POCKET JAMB STILE

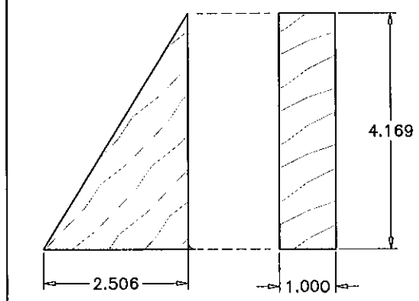

37 POCKET COVER TRIANGLE

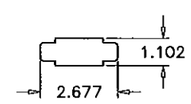

48 FIX PANEL SIDE KEY

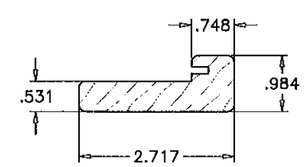

40 POCKET STILE HOOK

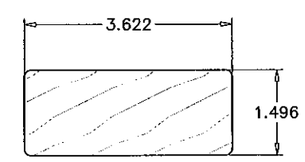

41 POCKET JAMB

Engr: JAVAD AHMAD
CIVIL
FLA. PE # 70592
C.A.N. 3538

JUN 08 2011

PRODUCT REVISED
as complying with the Florida
Building Code
Acceptance No 11-0303.01
Expiration Date 11/15/2012
By
Miami Dade Product Control

AL-FAROOQ CORPORATION
ENGINEERS & PRODUCT DEVELOPMENT
1235 S.W. 87 AVE
MIAMI, FLORIDA 33174
TEL. (305) 264-8100 FAX. (305) 262-6978
COMP–ANL\W07–16HWD

EUROPEAN WOOD LIFT/SLIDE GLASS DOOR (L.M.I.)

HARTMAN WINDOWS & DOORS, LLC
531 SOUTHERN BLVD.
WEST PALM BEACH, FL 33405
TEL. (561) 296–9600 FAX. (561) 296–9601

revisions:

no	date	by	description
A	03.26.09		NO CHANGE THIS SHEET
B	10.19.09		REV. PER BCCO COMMENTS
C	02.08.11		GENERAL REVISION
D	05.27.11		REV. PER BNC COMMENTS

date: 05–17–07
scale: 3/8" = 1"
dr. by: HAMID
chk. by:

drawing no.
W07–47

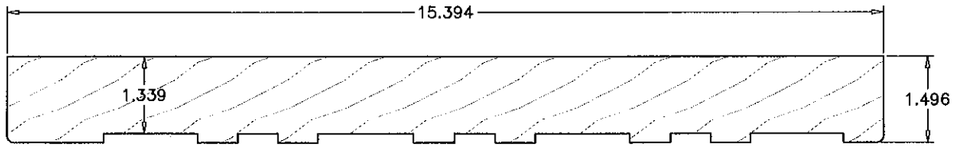

(1B) FRAME HEAD (4 TRACK)

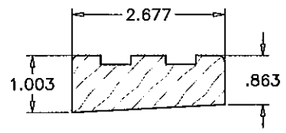

(46) RAIL BRIDGE (4 TRACK)

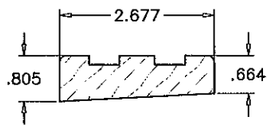

(46A) RAIL BRIDGE (4 TRACK)

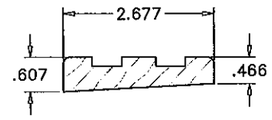

(46B) RAIL BRIDGE (4 TRACK)

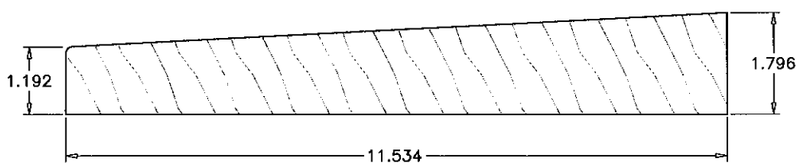

(3B) SILL EXTENSION (4 TRACK)

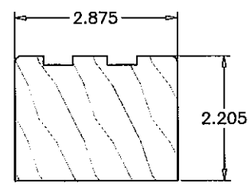

(2B) FRAME SILL (4 TRACK)

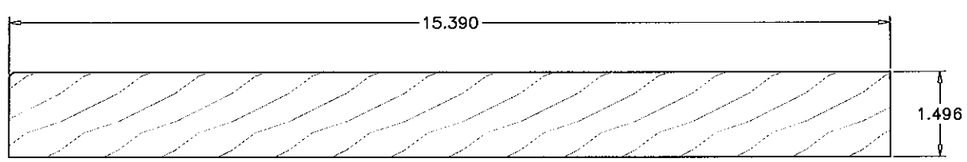

(5B) FRAME JAMB (4 TRACK)

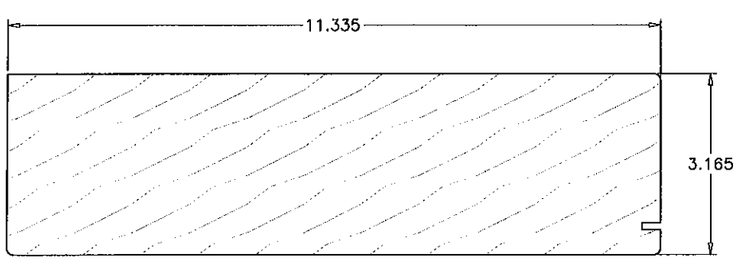

(36B) POCKET COVER (4 TRACK)

ITEM #	PART #	REQD.	DESCRIPTION	MATERIAL	MANF./SUPPLIER/REMARKS
1B	–	1/ DOOR	FRAME HEAD	WOOD	MAHOGANY, SG = 0.45
2B	–	1/ DOOR	FRAME SILL	WOOD	MAHOGANY, SG = 0.45
3B	–	1/ DOOR	SILL EXTENSION	WOOD	MAHOGANY, SG = 0.45
5B	–	1/ DOOR	FRAME JAMB (FIXED)	WOOD	MAHOGANY, SG = 0.45
36B	–	AS REQD.	POCKET COVER	WOOD	MAHOGANY, SG = 0.45
46	–	AS REQD.	RAIL BRIDGE	WOOD	MAHOGANY, SG = 0.45
46A	–	AS REQD.	RAIL BRIDGE	WOOD	MAHOGANY, SG = 0.45
46B	–	AS REQD.	RAIL BRIDGE	WOOD	MAHOGANY, SG = 0.45

4 TRACK DOOR FRAMES SHOWN ON THIS SHEET
PANELS, HARDWARE AND WEATHSTRIPPING ARE SAME AS 2 TRACK DOORS
SEE SHEETS 14 AND 15 FOR COMPONENT DETAILS AND DESCRIPTION.

Engr: JAVAD AHMAD
CIVIL
FLA. PE # 70592
C.A.N. 3538

JUN 03 2011

PRODUCT REVISED
as complying with the Florida
Building Code
Acceptance No 11-0303.01
Expiration Date 11/15/2012
By
Miami Dade Product Control

AL-FAROOQ CORPORATION
ENGINEERS & PRODUCT DEVELOPMENT
1235 S.W. 87 AVE
MIAMI, FLORIDA 33174
TEL. (305) 264-8100 FAX. (305) 262-6978
COMP-ANL\W07-16HWD

EUROPEAN WOOD LIFT/SLIDE GLASS DOOR (L.M.I.)

HARTMAN WINDOWS & DOORS, LLC
531 SOUTHERN BLVD.
WEST PALM BEACH, FL 33405
TEL. (561) 296-9600 FAX. (561) 296-9601

revisions:

no	date	by	description
C	02.08.11		GENERAL REVISION
D	05.27.11		REV. PER BNC COMMENTS

date: 05-17-07
scale: 3/8" = 1"
dr. by: HAMID
chk. by:

drawing no.
W07-47

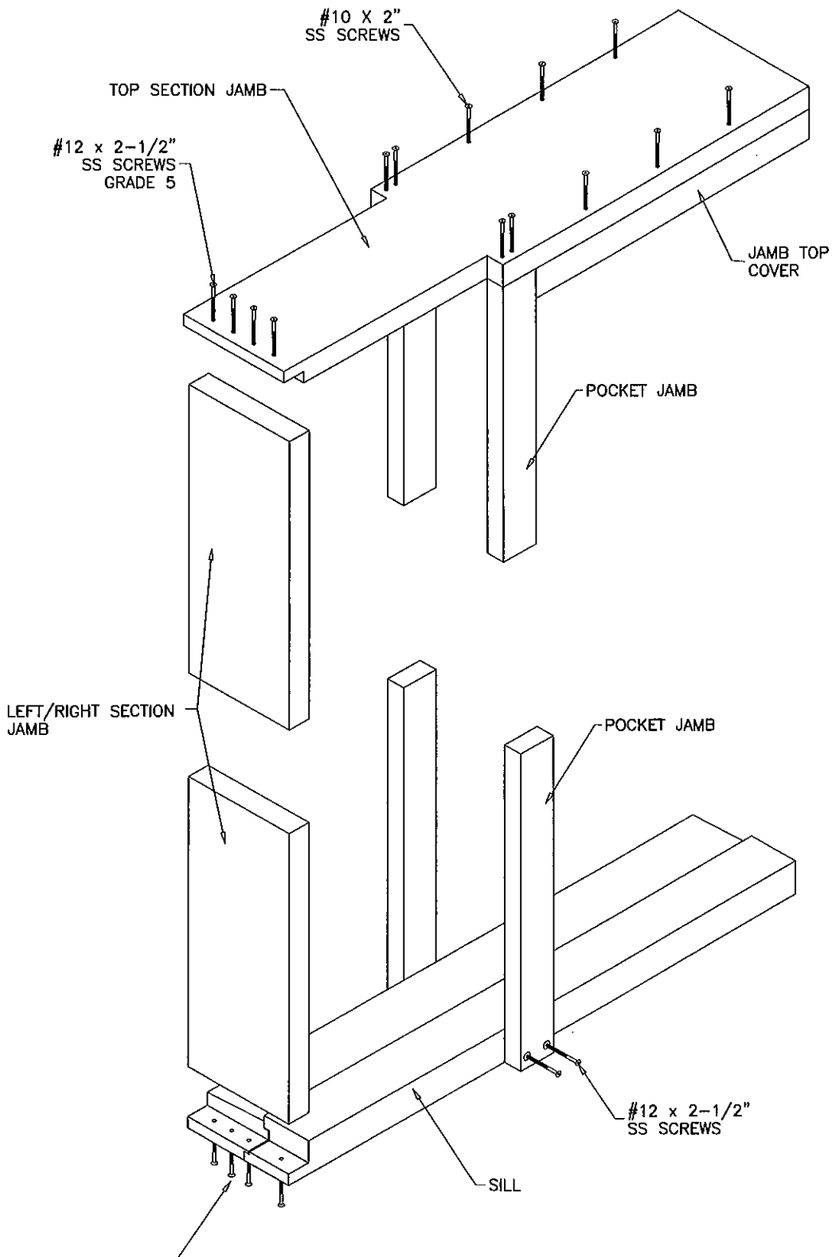

JAMB: HALF LAP SECURED WITH
#12X2-1/2 s.s. SCREWS NP-1 GLUE

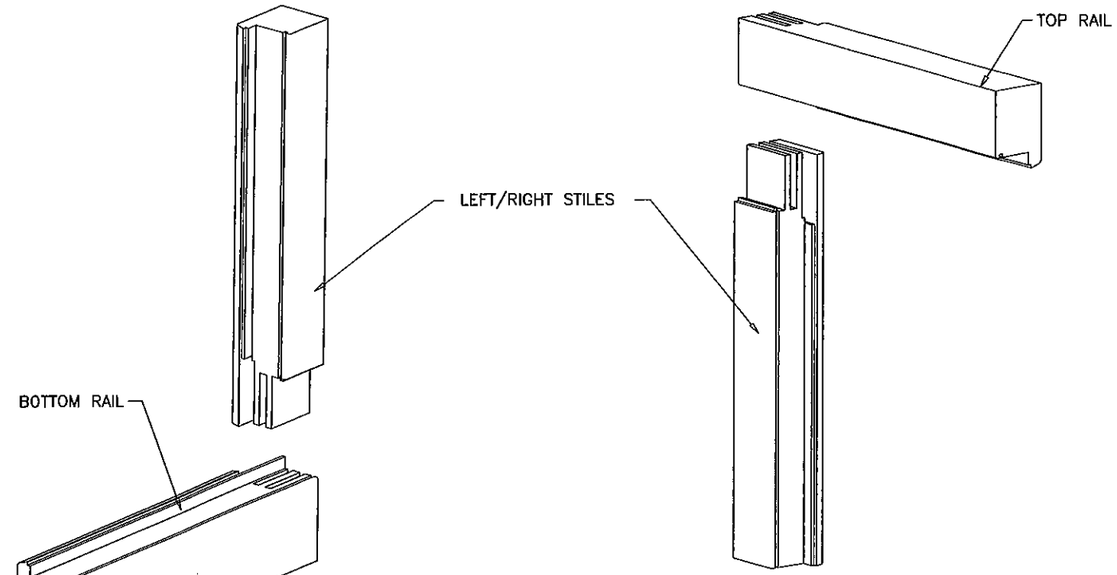

SASH:MULTI-FORK MORTISE AND
TENON JOINERY SECURED
SECURED WITH
WEST SYSTEM 2 PART EPOXY

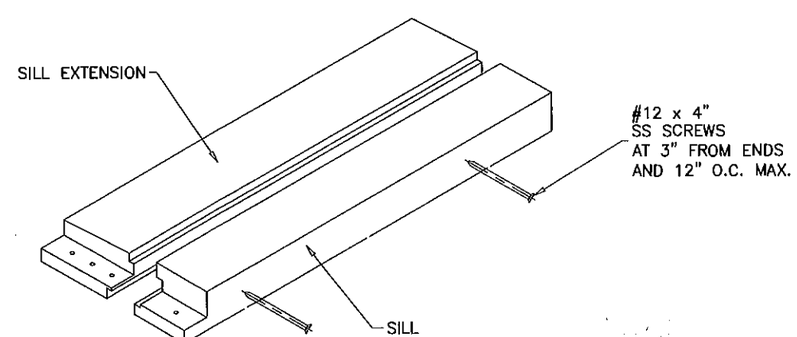

SILL: TONGUE AND GROOVE
SECURED WITH
WEST SYSTEM 2 PART EPOXY

Engr: JAVAD AHMAD
CIVIL
FLA. PE # 70592
C.A.N. 3538
JUN 03 2011

PRODUCT REVISED
is complying with the Florida
Building Code
Acceptance No 11-0303.01
Expiration Date 11/15/2012
By
Miami Dade Product Control

AL-FAROOQ CORPORATION
ENGINEERS & PRODUCT DEVELOPMENT
1235 S.W. 87 AVE
MIAMI, FLORIDA 33174
TEL. (305) 264-8100 FAX. (305) 262-6978
COMP-ANL\W07-16HWD

EUROPEAN WOOD LIFT/SLIDE GLASS DOOR (L.M.I.)

HARTMAN WINDOWS & DOORS, LLC
531 SOUTHERN BLVD.
WEST PALM BEACH, FL 33405
TEL. (561) 296-9600 FAX. (561) 296-9601

revisions:

no	date	by	description
A	03.26.09		NO CHANGE THIS SHEET
B	10.19.09		REV. PER BCCO COMMENTS
C	02.08.11		GENERAL REVISION
D	05.27.11		REV. PER BNC COMMENTS

date: 05-17-07
scale: -
dr. by: HAMID
chk. by:

drawing no.
W07-47

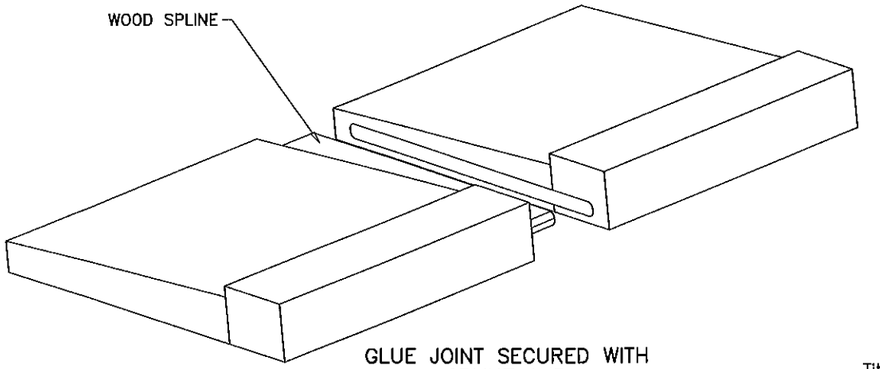

GLUE JOINT SECURED WITH
SPLINE AND
SECURED WITH
WEST SYSTEM 2 PART EPOXY

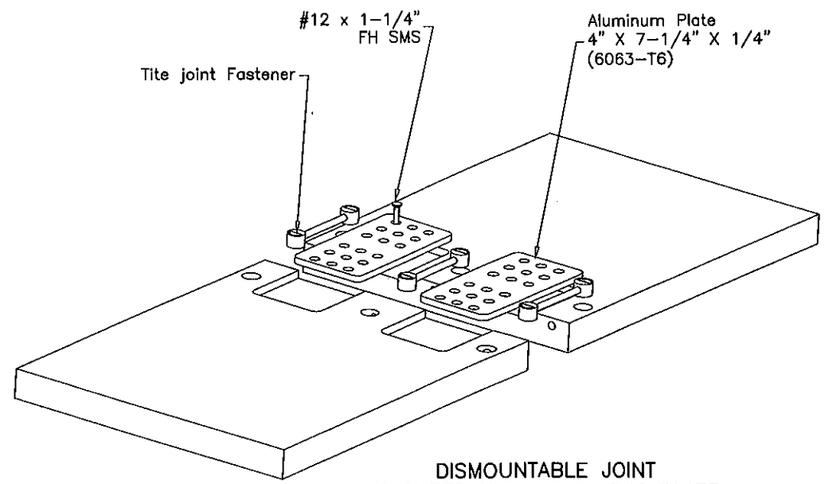

DISMOUNTABLE JOINT
SECURED WITH ALUMINUM PLATE
AND TITE JOINT
FASTENERS W/ S.S.SCREWS

Engr: JAVAD AHMAD
CIVIL
FLA. PE # 70592
C.A.N. 3538

JUN 03 2011

PRODUCT REVISED
Is complying with the Florida
Building Code
Acceptance No 11-0303.01
Expiration Date 11/15/2012
By
Miami Dade Product Control

AL-FAROOQ CORPORATION
ENGINEERS & PRODUCT DEVELOPMENT
1235 S.W. 87 AVE
MIAMI, FLORIDA 33174
TEL (305) 264-8100 FAX. (305) 262-6978
COMP-ANL\W07-16HWD

EUROPEAN WOOD LIFT/SLIDE GLASS DOOR (L.M.I.)

HARTMAN WINDOWS & DOORS, LLC
531 SOUTHERN BLVD.
WEST PALM BEACH, FL 33405
TEL. (561) 296-9600 FAX. (561) 296-9601

revisions:

no	date	by	description
C	02.08.11		GENERAL REVISION
D	05.27.11		REV. PER BNC COMMENTS

date: 05-17-07
scale: –
dr. by: HAMID
chk. by:

drawing no.
W07-47

sheet 18 of 18