MIAMI-DADE COUNTY
BUILDING AND NEIGHBORHOOD COMPLIANCE DEPARTMENT (BNC)
BOARD AND CODE ADMINISTRATION DIVISION

MIAMI-DADE COUNTY, FLORIDA
PRODUCT CONTROL SECTION
11805 SW 26th Street, Room 208
Miami, Florida 33175-2474
T (786) 315-2590 F (786) 315-2599
www.miamidade.gov/building

# NOTICE OF ACCEPTANCE (NOA)

**Ultimate Door of Palm Beach, Inc.**
**2800 North 2nd Avenue**
**Lake Worth, FL 33461**

**SCOPE:**

This NOA is being issued under the applicable rules and regulations governing the use of construction materials. The documentation submitted has been reviewed by Miami-Dade County Product Control Section and accepted by the Board of Rules and Appeals (BORA) to be used in Miami-Dade County and other areas where allowed by the Authority Having Jurisdiction (AHJ).

This NOA shall not be valid after the expiration date stated below. The Miami-Dade County Product Control Section (In Miami-Dade County) and/or the AHJ (in areas other than Miami-Dade County) reserve the right to have this product or material tested for quality assurance purposes. If this product or material fails to perform in the accepted manner, the manufacturer will incur the expense of such testing and the AHJ may immediately revoke, modify, or suspend the use of such product or material within their jurisdiction. BORA reserves the right to revoke this acceptance, if it is determined by Miami-Dade County Product Control Section that this product or material fails to meet the requirements of the applicable building code.

This product is approved as described herein, and has been designed to comply with the Florida Building Code, including the High Velocity Hurricane Zone.

**DESCRIPTION: Series Outswing Aluminum Clad Wood French Doors – L.M.I.**

**APPROVAL DOCUMENT:** Drawing No. **1004A**, titled series "Outswing French Doors," Sheets 1 through 8 of 8, prepared by W. W. Schaefer Engineering & Consulting, P.A., dated 02/24/00 with revision "**C1**" on 03/11/11, signed and sealed by Warren W. Schaefer, P. E., bearing the Miami-Dade County Product Control Renewal stamp with the Notice of Acceptance number and Expiration date by the Miami-Dade County Product Control Section.

**MISSILE IMPACT RATING: Large and Small Missile Impact Resistant.**

**LABELING:** Each unit shall bear a permanent label with the manufacturer's name or logo, city, state, model/ series and following statement: "Miami-Dade County Product Control Approved" unless otherwise noted herein.

**REVISION** of this NOA shall be considered after a renewal application has been filed and there has been no change in the applicable building code negatively affecting the performance of this product.

**TERMINATION** of this NOA will occur after the expiration date or if there has been a revision or change in the materials, use, and/or manufacture of the product or process. Misuse of this NOA as an endorsement of any product, for sales, advertising or any other purposes shall automatically terminate this NOA. Failure to comply with any section of this NOA shall be cause for termination and removal of NOA.

**ADVERTISEMENT:** The NOA number preceded by the words Miami-Dade County, Florida, and followed by the expiration date may be displayed in advertising literature. If any portion of the NOA is displayed, then it shall be done in its entirety.

**INSPECTION:** A copy of this entire NOA shall be provided to the user by the manufacturer or its distributors and shall be available for inspection at the job site at the request of the Building Official.

This NOA **renews NOA No. 05-0824.03** and consists of this page 1, evidence pages E-1, E-2 and E-3, as well as approval document mentioned above.

The submitted documentation was reviewed by **Jaime D. Gascon, P. E.**

MIAMI-DADE COUNTY APPROVED

J. Gascon
3/30/11

## NOTICE OF ACCEPTANCE: EVIDENCE SUBMITTED

**A. DRAWINGS**

1. Manufacturer's die drawings and sections.
2. Drawing No. **1004A**, titled series "Outswing French Doors," Sheets 1 through 8 of 8, prepared by W. W. Schaefer Engineering & Consulting, P.A., dated 02/24/00 with revision "**C1**" on 03/11/11, signed and sealed by Warren W. Schaefer, P. E.

**B. TESTS**

1. Test reports on: 1) Air Infiltration Test, per FBC, TAS 202–94
   2) Uniform Static Air Pressure Test, Loading per FBC TAS 202–94
   3) Water Resistance Test, per FBC, TAS 202–94

   along with marked–up drawings and installation diagram of an out–swinging wood clad aluminum French door prepared by Hurricane Test Laboratory, LLC, Test Reports No.'s **HTL–0026–1008–94** and **HTL–0026–0214–97**, dated 11/14/94 and 01/09/97, both signed and sealed by Timothy Marshall, P. E.
   ***"Submitted under previous NOA No. 01–0327.01"***
2. Test reports on: 1) Large Missile Impact Test per FBC, TAS 201–94
   2) Cyclic Wind Pressure Loading per FBC, TAS 203–94

   along with marked–up drawings and installation diagram of an out–swinging wood clad aluminum French door, prepared by Hurricane Test Laboratory, LLC, Test Reports No's. **HTL–0026–1023–95**, **HTL–0026–0508–95** and **HTL–0026–1212–99**, dated 1/23/95, 5/12/95 and 12/08/99, both signed and sealed by Timothy Marshall, P. E.
   ***"Submitted under previous NOA No. 01–0327.01"***
3. Test reports on: 1) Large Missile Impact Test per FBC, TAS 201–94
   3) Cyclic Wind Pressure Loading per FBC, TAS 203–94

   along with marked–up drawings and installation diagram of an out–swinging wood clad aluminum French door, prepared by Hurricane Test Laboratory, LLC, Test Report No. **HTL–0026–0913–96**, dated 06/26/97 and 09/23/96, signed and sealed by Timothy Marshall, P. E. and by Fredrick D. Shaffer, P. E.
   ***"Submitted under previous NOA No. 01–0327.01***
4. Test reports on: 1) Air Infiltration Test, per FBC, TAS 202–94
   2) Uniform Static Air Pressure Test, Loading per FBC TAS 202–94
   3) Water Resistance Test, per FBC, TAS 202–94
   4) Forced Entry Test, per FBC 2411.3.2.1 (b) and TAS 202-94

   along with marked–up drawings and installation diagram of an out–swinging wood clad aluminum French door prepared by Hurricane Test Laboratory, LLC, Test Report No. **HTL–0026–1017–99**, dated 10/22/99, signed and sealed by Timothy Marshall, P. E.
   ***"Submitted under previous NOA No. 01–0327.01"***

**Jaime D. Gascon, P. E.**
**Product Control Section Supervisor**
**NOA No. 11–0310.01**
**Expiration Date: April 16, 2012**
**Approval Date: April 7, 2011**

## NOTICE OF ACCEPTANCE: EVIDENCE SUBMITTED

**B. TESTS (CONTUNIED)**

5. Test reports on: 1) Forced Entry Test, per FBC 2411.3.2.1 (b) and TAS 202-94 along with marked–up drawings and installation diagram of an out–swinging wood clad aluminum French door, prepared by Hurricane Test Laboratory, LLC, Test Reports No.'s **HTL–0026–1104–95** and **HTL–0026–0501–96**, dated 11/13/95 and 05/10/96, both signed and sealed by Timothy Marshall, P. E.
   ***"Submitted under previous NOA No. 01–0327.01"***
6. Test reports on: 1) Large Missile Impact Test per FBC, TAS 201–94 along with marked–up drawings and installation diagram of an out–swinging wood clad aluminum French door, prepared by Hurricane Test Laboratory, LLC, Test Reports No's. **HTL–0026–0508–95** and **HTL–0026–0123–95**, dated 01/23/95 and 05/12/95, all signed and sealed by Timothy Marshall, P. E.
   ***"Submitted under previous NOA No. 01–0327.01"***
7. Test reports on: 1) Uniform Static Air Pressure Test, Loading per FBC TAS 202–94 along with marked–up drawings and installation diagram of an out–swinging wood clad aluminum French door, prepared by Hurricane Test Laboratory, LLC, Test Report No. **HTL–0026–1105–95**, dated 11/13/95, signed and sealed by Timothy Marshall, P. E.
   ***"Submitted under previous NOA No. 01–0327.01"***
8. Test reports on: 1) Air Infiltration Test, per FBC, TAS 202–94
   2) Uniform Static Air Pressure Test, Loading per FBC TAS 202–94
   3) Water Resistance Test, per FBC, TAS 202–94
   along with marked–up drawings and installation diagram of an out–swinging wood clad aluminum French door, prepared by Hurricane Test Laboratory, LLC, Test Report No. **HTL–0026–1212–99**, dated 12/08/99, signed and sealed by Vinu J. Abraham, P. E.
   ***"Submitted under previous NOA No. 01–0327.01"***

**C. CALCULATIONS**

1. Anchor verification calculations and structural analysis, complying with FBC–2007, prepared by W. W. Schaefer Engineering & Consulting, P.A., dated 03/11/11, signed and sealed by Warren W. Schaefer, P. E.
   **Complies with ASTM E1300–98/ 04**

**D. QUALITY ASSURANCE**

1. Miami–Dade Building and Neighborhood Compliance Department (BNC).

**E. MATERIAL CERTIFICATIONS**

1. Notice of Acceptance No. **08–0709.04** issued to Nebula Glass International dba Glasslam N.G.I., Inc. for their "**Safety–Plus II Laminated Glass**" dated 09/11/08, expiring on 08/07/13.

**Jaime D. Gascon, P. E.**
**Product Control Section Supervisor**
**NOA No. 11–0310.01**
**Expiration Date: April 16, 2012**
**Approval Date: April 7, 2011**

## NOTICE OF ACCEPTANCE: EVIDENCE SUBMITTED

### F. STATEMENTS

1. Statement letter of conformance and compliance with the FBC 2007, dated March 11, 2011, signed and sealed by Warren W. Schaefer, P. E.
2. Statement letter of no financial interest and independence, dated March 11, 2011, signed and sealed by Warren W. Schaefer, P. E.
3. Testing agreement letter, dated 03/03/2011 between Hurricane Test Laboratory, LLC (HTL) and Ultimate Door of Palm Beach, Inc., issued by HTL.
4. One year approval, subjected to successful verification test, the final approval will be issued for the balanced of a total of 5 years.
5. Laboratory compliance letters for Test Reports No.'s **HTL – 0026 – 1008 – 94**, **HTL – 0026 – 0214 – 97**, **HTL – 0026 – 1023 – 95**, **HTL – 0026 – 0508 – 95**, **HTL – 0026 – 1212 – 99**, **HTL – 0026 – 1017 – 99**, **HTL – 0026 – 1104 – 95**, **HTL – 0026 – 0501 – 96**, **HTL – 0026 – 0508 – 95**, **HTL – 0026 – 0123 – 95** and **HTL–0026–1105–95**, issued by Hurricane Test Laboratory, LLC, dated 11/14/94, 01/09/97, 01/23/95, 05/12/95, 12/08/99, 10/22/99, 01/23/95, 05/12/95, 11/13/95, 11/13/95 and 05/10/96, signed and sealed by Timothy Marshall, P. E.
   ***"Submitted under previous NOA No. 01–0327.01"***
6. Laboratory compliance letter for Test Report No. **HTL–0026–0913–96**, issued by Hurricane Test Laboratory, LLC, dated 06/26/97 and 09/23/96, signed and sealed by Timothy Marshall, P. E. and by Fredrick D. Shaffer, P. E.
   ***"Submitted under previous NOA No. 01–0327.01"***
7. Laboratory compliance letter for Test Report No. **HTL–0026–1212–99**, issued by Hurricane Test Laboratory, LLC, dated 12/08/99, signed and sealed by Vinu J. Abraham, P. E.
   ***"Submitted under previous NOA No. 01–0327.01"***

### G. OTHERS

1. Notice of Acceptance No. **05–0824.03**, issued to Ultimate Door of Palm Beach, Inc. for their Series "**Outswing Aluminum Clad Wood French Doors–L.M.I.**", approved on 08/02/01 and expiring on 12/24/06.
2. One year conditional approval, subjected to successful verification test, approved on 04/07/11 and expiring on 04/16/12.

**Jaime D. Gascon, P. E.**
**Product Control Section Supervisor**
**NOA No. 11–0310.01**
**Expiration Date: April 16, 2012**
**Approval Date: April 7, 2011**

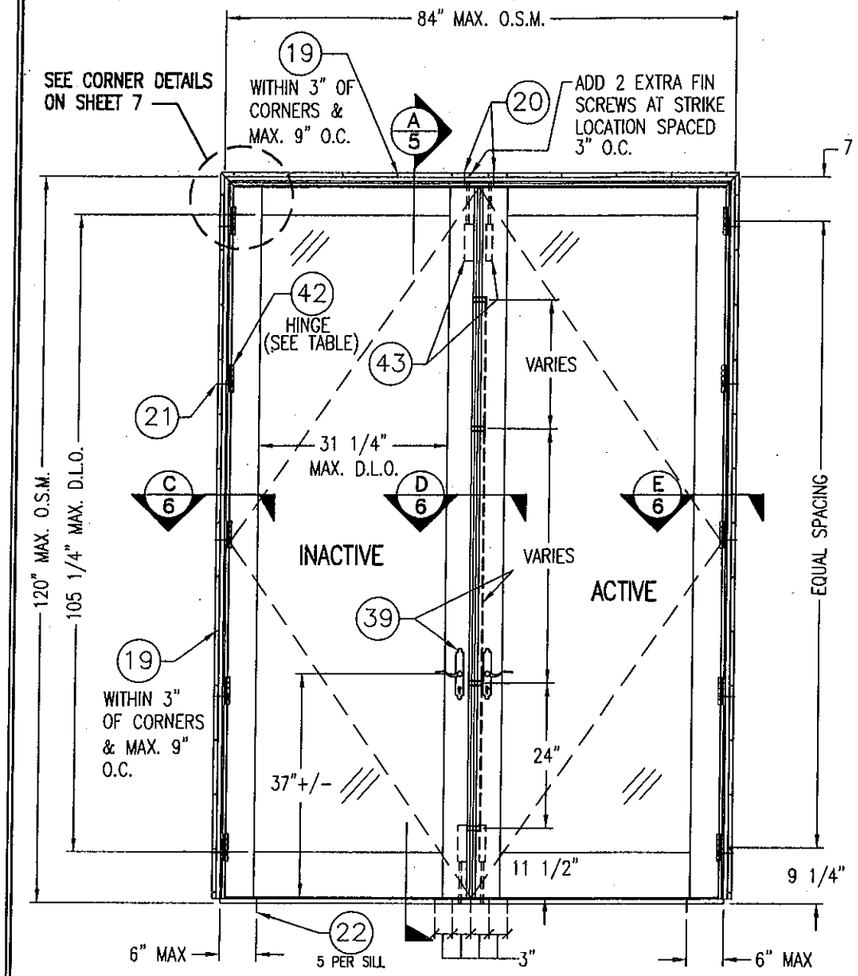


## 84" X 120" DOUBLE RECTANGULAR FRENCH DOOR

SCALE:1/2"=1'-0"

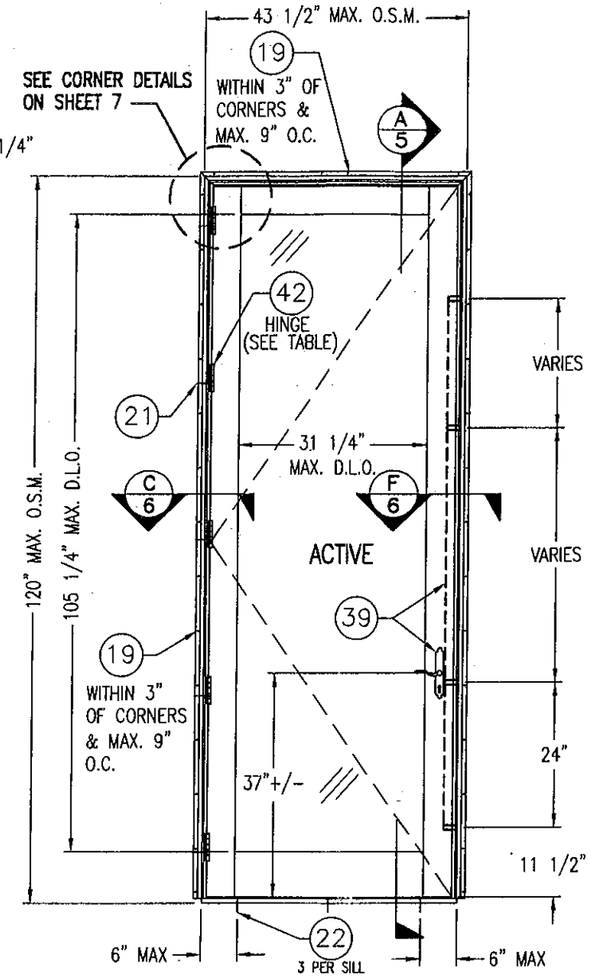


## 43 1/2" X 120" SINGLE RECTANGULAR FRENCH DOOR

SCALE:1/2"=1'-0"

ALL ELEVATIONS VIEWED FROM EXTERIOR

THESE DRAWINGS ARE APPLICABLE ONLY TO THE PRODUCT SPECIFIED. THEY MAY NOT BE USED FOR THE ASSEMBLY AND/OR INSTALLATION OF ANY OTHER PRODUCT NOR MAY THEY BE USED FOR RATIONAL AND/OR LOCAL APPROVAL OF ANY PRODUCT NOT PRODUCED BY THE MANUFACTURER STATED ON THESE DRAWINGS.

| ALLOWABLE DESIGN PRESSURE | | | |
|---|---|---|---|
| DOOR SIZE | DESIGN PRESSURE | | FOOT NOTE |
| | P1 | P2 | |
| 84" X 120" | 58 PSF | 65 PSF | 1, 4 |
| 43 1/2" X 120" | 58 PSF | 65 PSF | 1,4 |
| 75 1/8" X 96" | 70 PSF | 70 PSF | 2, 3, 4 |
| 39" X 96" | 70 PSF | 70 PSF | 2, 3, 4 |

P1 = PRESSURE WHEN USING 1/2" LAMINATED ANNEALED GLASS.
P2 = PRESSURE WHEN USING 1/2" LAMINATED TEMPERED GLASS.

LOAD TABLE FOOT NOTES:

1. P1 MAY BE INCREASED TO 65 PSF IF THE DAYLIGHT OPENING IS EQUAL TO OR SMALLER THAN 20 SF.
2. 70 PSF PRESSURE IS ONLY APPLICABLE WHEN PARTS 5, 48, 49 & 50 ARE USED WITH THE DOORS. OTHERWISE, THE ALLOWABLE PRESSURE MUST BE REDUCED TO 65 PSF.
3. ALLOWABLE PRESSURE FOR FIXED PANELS MAY NOT EXCEED 65 PSF.
4. LISTED PRESSURE IS FOR BOTH POSITIVE & NEGATIVE DIRECTIONS.

| HINGE TABLE | |
|---|---|
| DOOR HEIGHT | NO. HINGES REQUIRED |
| 120" | 5 PER PANEL |
| 96" & SMALLER | 4 PER PANEL |

NOTE: ONLY 4 HINGES REQUIRED PER PANEL AT ALL RADIUS TOP DOORS

O.S.M. = OUTSIDE MEASUREMENT
D.L.O. = DAYLIGHT OPENING

| ANCHOR REQUIREMENTS TABLE | | | |
|---|---|---|---|
| FRAME SHEAR SCREWS | | | |
| OPENING TYPE (SUBSTRATE) | JAMB & HINGE TO OPENING FASTENER TYPE | MINIMUM EMBED | MINIMUM EDGE DIST. |
| 2X_ WOOD FRAME OR BUCK | NO. 8 SMS SCREW | 1 1/4" | 3/4" |
| 2X_ WOOD FRAME OR BUCK | NO. 12 SMS SCREW | 1 1/4" | 3/4" |
| MIN. 2500 P.S.I. CONCRETE | 1/4" CONCRETE SCREW | 1 1/2" | 2 1/2" |
| NAIL FIN SCREWS | | | |
| 2X_ WOOD FRAME OR BUCK | NO. 8 S.S. SMS SCREW | 1 1/8" | 1 1/2" |

**GENERAL NOTES:**

1. THESE DOOR SYSTEMS HAVE BEEN TESTED, ANALYZED & APPROVED FOR DESIGN PRESSURES NOT TO EXCEED THOSE SHOWN IN THE "ALLOWABLE DESIGN PRESSURE TABLE(S).
2. OPENINGS, BUCKING & BUCKING FASTENERS MUST BE PROPERLY DESIGNED & INSTALLED TO TRANSFER WIND LOADS TO THE STRUCTURE.
3. ALL HARDWARE & FASTENERS SHALL BE IN ACCORDANCE WITH THESE DRAWINGS & SHALL NOT VARY UNLESS SPECIFICALLY MENTIONED ON THE DRAWINGS. SPECIFIED ANCHOR EMBED TO BASE MATERIAL SHALL BE BEYOND WALL FINISH OR STUCCO.
4. THE DETAILS & SPECIFICATIONS SHOWN HEREIN REPRESENT THE PRODUCTS TESTED & PROPOSED FOR WATER, AIR, IMPACT, CYCLIC & UNIFORM STATIC AIR PRESSURE TESTING IN CONFORMANCE WITH THE FLORIDA BUILDING CODE PROTOCALS TAS-201, 202 & 203 FOR LARGE MISSILE IMPACT DOORS.
5. THESE DOOR SYSTEMS HAVE BEEN DESIGNED IN ACCORDANCE WITH AND MEET THE REQUIREMENTS OF THE FLORIDA BUILDING CODE (FBC) INCLUDING HIGH VELOCITY HURRICANE ZONES (HVHZ).
6. IMPACT SHUTTERS ARE NOT REQUIRED WITH THESE DOORS.
7. ALL ANCHORS SECURING DOOR FRAME TO PRESSURE TREATED BUCKS OR WOOD FRAMING SHALL BE CAPABLE OF RESISTING CORROSION CAUSED BY THE PRESSURE TREATING CHEMICALS IN THE WOOD.
8. DETERMINE THE POSITIVE & NEGATIVE DESIGN LOADS TO USE WHEN REFERENCING THESE DOCUMENTS IN ACCORDANCE WITH THE GOVERNING CODE AND GOVERNING WIND VELOCITY. FOR WIND LOAD CALCULATIONS IN ACCORDANCE WITH THE FLORIDA BUILDING CODE, A DIRECTIONALITY FACTOR OF Kd = 0.85 MAY BE APPLIED PER THE ASCE-7 STANDARD.
9. NO INCREASE IN ALLOWABLE STRESS HAS BEEN USED IN THE CERTIFICATION OF THIS PRODUCT. WIND LOAD DURATION FACTOR Cd = 1.6 WAS USED FOR WOOD SCREW ANALYSIS ONLY.
10. MATERIALS, INCLUDING BUT NOT LIMITED TO STEEL SCREWS, THAT COME INTO CONTACT WITH OTHER DISSIMILAR MATERIALS SHALL MEET THE REQUIREMENTS OF FLORIDA BUILDING CODE CHAPTER 2D.
11. All WOOD MEMBERS OF WINDOWS THAT MAY POSSIBLY COME INTO CONTACT WITH MASONRY OR CONCRETE SUBSTRATES, ARE SUBJECT TO MOISTURE &/OR ARE SUBJECT TO THE OUTSIDE ENVIRONMENT SHALL BE OF AN APPROVED DURABLE SPECIES OR BE TREATED IN AN APPROVED METHOD WITH AN APPROVED PRESERVATIVE PER FBC SECTION 2326.

PRODUCT RENEWED
as complying with the Florida
Building Code
Acceptance No 11-0310.01
Expiration Date 04/16/2012
By
Miami Dade Product Control

WARREN W. SCHAEFER LICENSE No. 44135 STATE OF FLORIDA PROFESSIONAL ENGINEER

| DRAWN BY: W.W.S. | CHECKED BY: W.W.S. |
|---|---|
| PLOT: 1=24 | DATE: 02/24/00 |

| NO. | REVISION DESCRIPTION | BY | DATE |
|---|---|---|---|
| A1 | CHANGED SHEET # | W.W.S. | 03/19/01 |
| B1 | UPDATE TO 2004 CODE COMPLIANT | K.P.S. | 08/09/05 |
| B2 | ADDED ANCHORS AT SILL | K.P.S. | 08/09/05 |
| C1 | UPDATE TO CURRENT STANDARDS | W.W.S. | 03/11/11 |

DRAWING TITLE: OUTSWING FRENCH DOORS (DADE)

MANUFACTURER: ULTIMATE DOOR OF PALM BEACH, INC.
2800 2ND AVE. NORTH
LAKE WORTH, FL 33461
561-642-2828

CONSULTANTS: W. W. SCHAEFER ENGINEERING & CONSULTING, P.A. (CA 6809)
7480 150TH COURT NORTH
PALM BEACH GARDENS, FL 33418
PHONE: 561-744-3424

CERTIFICATION: MAR 1 1 2011
WARREN W. SCHAEFER, P.E.
P.E. NO. 44135

DRAWING NO. 1004A | REV. C

SHEET NO. 1 OF 8

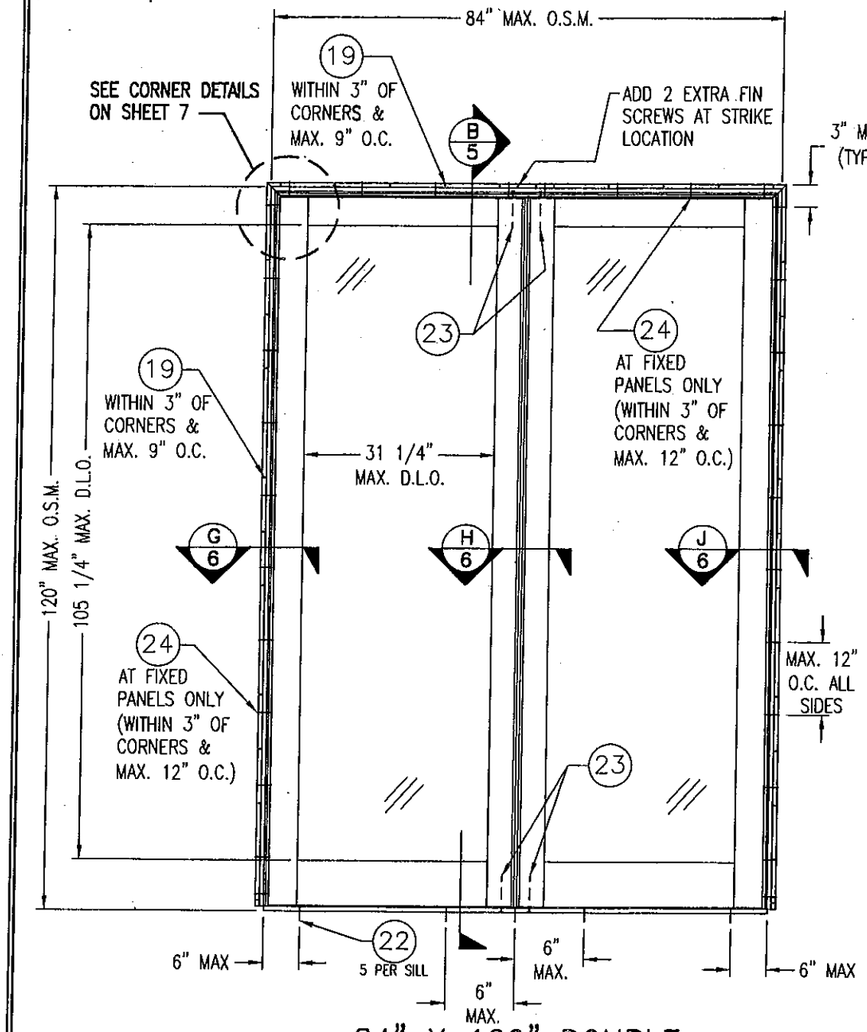


## 84" X 120" DOUBLE RECTANGULAR FIXED PANELS

SCALE:1/2"=1'-0"

NOTE: FIXED PANELS MAY BE RADIUS TOP BUT LIMITED TO 72" WIDE

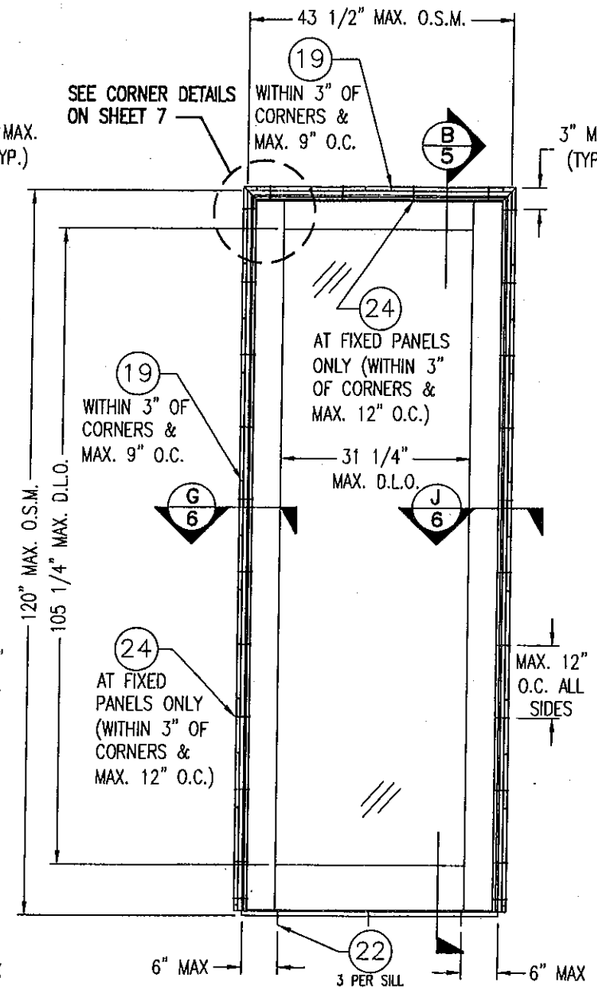


## 43 1/2" X 120" SINGLE RECTANGULAR FIXED PANEL

SCALE:1/2"=1'-0"

NOTE: FIXED PANELS MAY BE RADIUS TOP

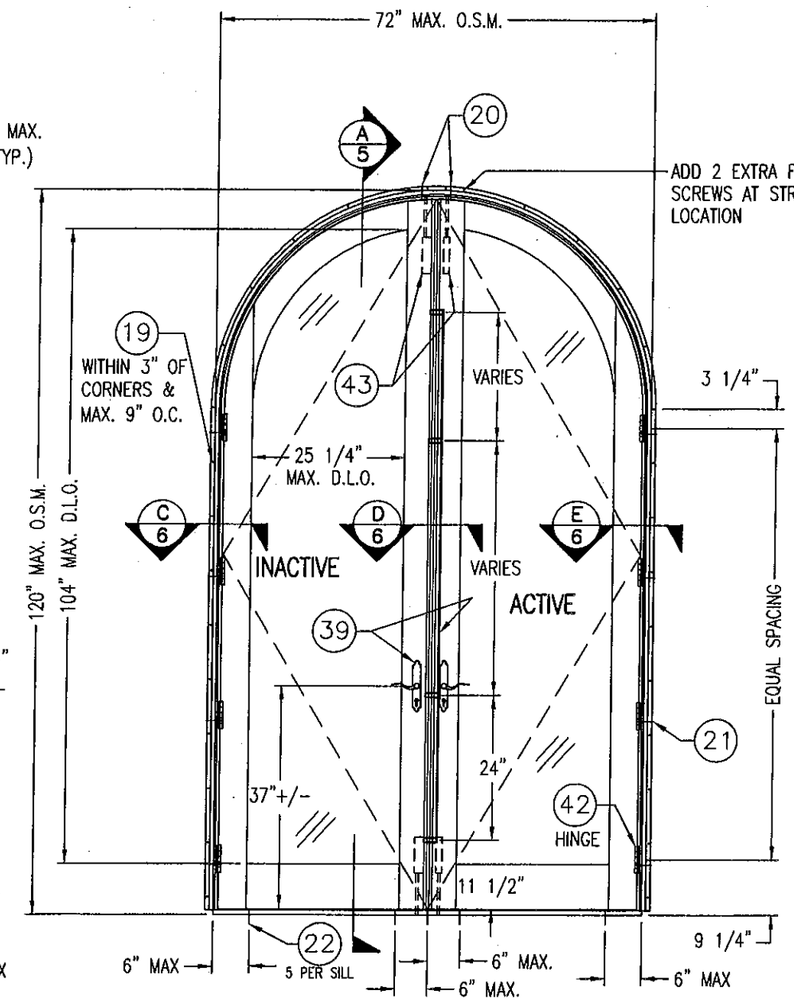


## 72" X 120" DOUBLE QUARTER-ROUND FRENCH DOOR

SCALE:1/2"=1'-0"

NOTE: HALF ROUND & PARTIAL SEGMENTAL TOP DOORS ARE ALSO ACCEPTABLE.

72" IS MAX. ALLOWABLE WIDTH FOR SHAPED TOP DOUBLE DOORS.

ALL ELEVATIONS VIEWED FROM EXTERIOR

FOR DESIGN LOADS & HINGE REQUIREMENTS, SEE SHEET 1

O.S.M. = OUTSIDE MEASUREMENT
D.L.O. = DAYLIGHT OPENING

PRODUCT RENEWED
as complying with the Florida
Building Code
Acceptance No 11-0310.01
Expiration Date 04/16/2012
By
Miami Dade Product Control

WARREN W. SCHAEFER LICENSE No. 44135 STATE OF FLORIDA PROFESSIONAL ENGINEER

| DRAWN BY: W.W.S. | CHECKED BY: W.W.S. |
|---|---|
| PLOT: 1=24 | DATE: 02/24/00 |

| NO. | REVISION DESCRIPTION | BY | DATE |
|---|---|---|---|
| A1 | CHANGED SHEET # | W.W.S. | 03/19/01 |
| B2 | ADDED ANCHORS AT SILL | K.P.S. | 08/09/05 |

DRAWING TITLE
OUTSWING FRENCH DOORS (DADE)

MANUFACTURER
ULTIMATE DOOR OF PALM BEACH, INC.
2800 2ND AVE. NORTH
LAKE WORTH, FL 33461
561-642-2828

CONSULTANTS
W. W. SCHAEFER ENGINEERING & CONSULTING, P.A. (CA 6809)
7480 150TH COURT NORTH
PALM BEACH GARDENS, FL 33418
PHONE: 561-744-3424

CERTIFICATION
MAR 11 2011
WARREN W. SCHAEFER, P.E.
P.E. NO. 44135

DRAWING NO. 1004A
REV. C
SHEET NO. 2 OF 8

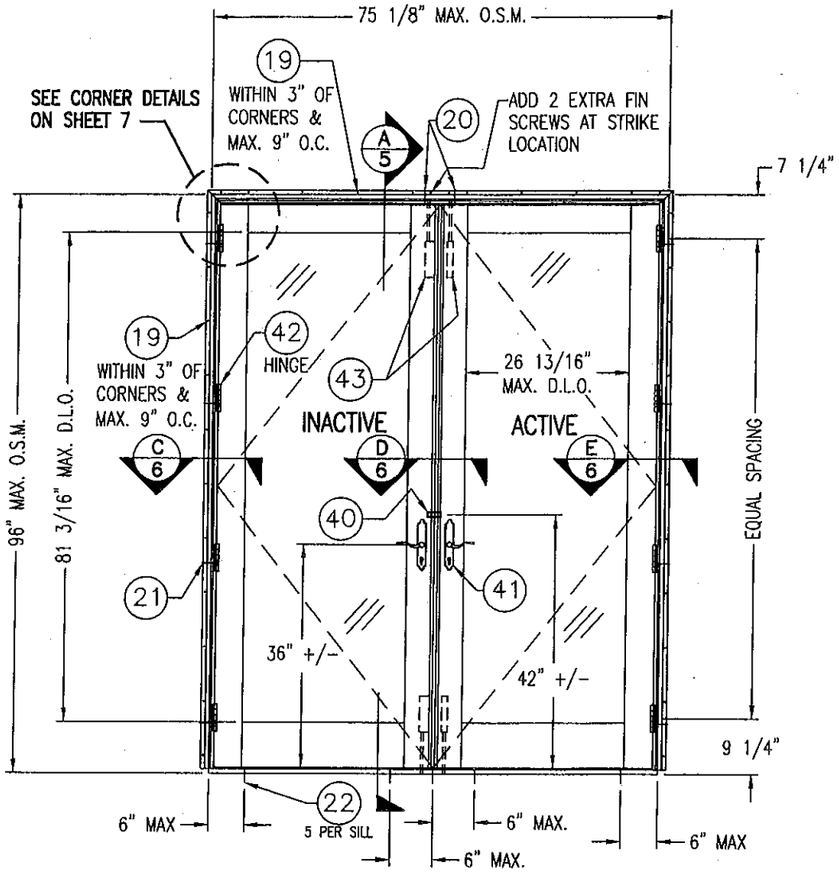


## 75 1/8" X 96" DOUBLE RECTANGULAR FRENCH DOOR

SCALE:1/2"=1'-0"

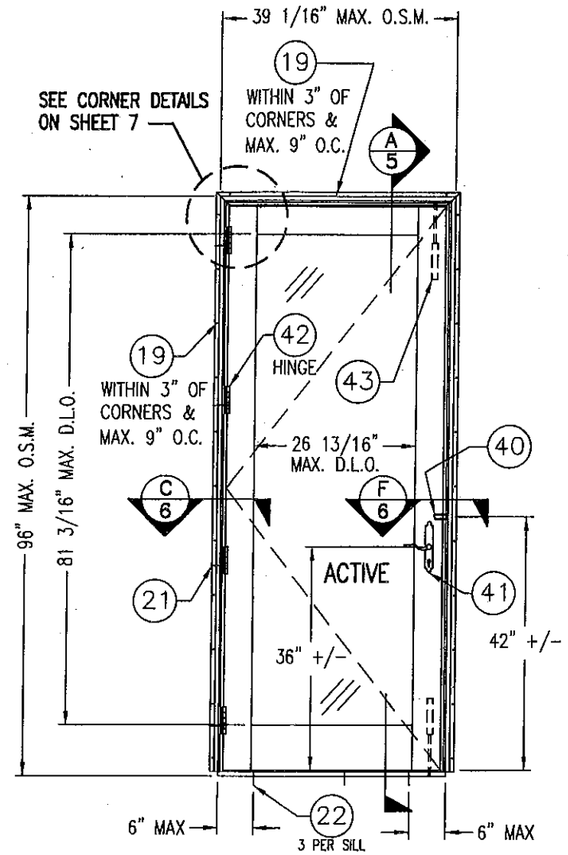


## 39 1/16" X 96" SINGLE RECTANGULAR FRENCH DOOR

SCALE:1/2"=1'-0"

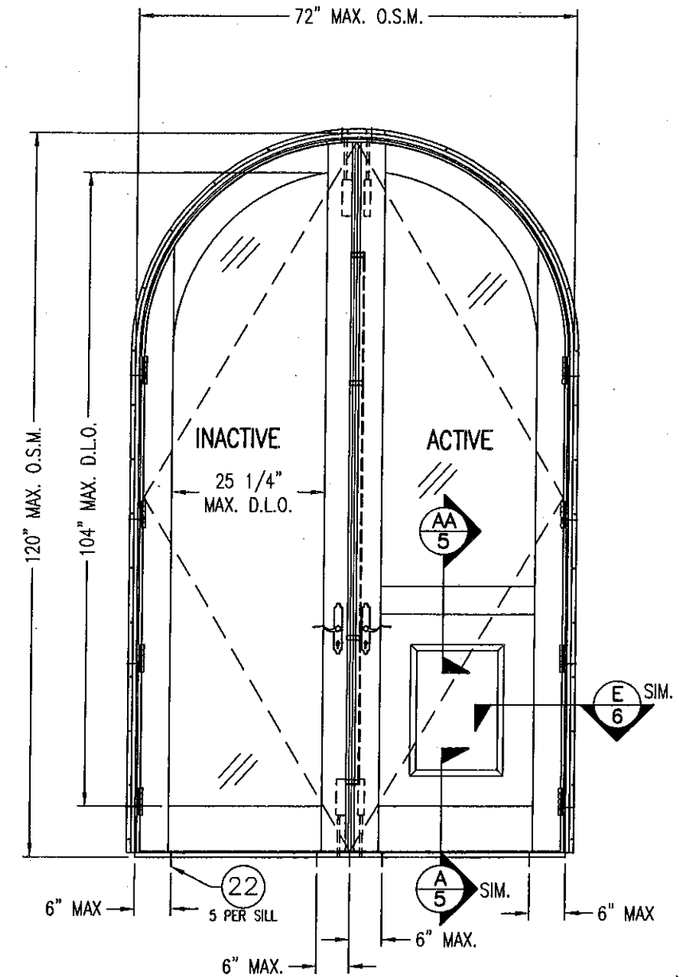


## FRENCH DOOR WITH RAISED PANEL

SCALE:1/2"=1'-0"

ALLOWABLE WITH ALL DOORS
(FOR DETAILS NOT SHOWN, SEE OTHER ELEVATIONS)

ALL ELEVATIONS VIEWED FROM EXTERIOR

FOR DESIGN LOADS & HINGE REQUIREMENTS, SEE SHEET 1

O.S.M. = OUTSIDE MEASUREMENT
D.L.O. = DAYLIGHT OPENING

**PRODUCT RENEWED**
**as complying with the Florida Building Code**
**Acceptance No** 11-0310.01
**Expiration Date** 04/16/2012
**By** _____
**Miami Dade Product Control**

| DRAWN BY: W.W.S. | CHECKED BY: W.W.S. |
|---|---|
| PLOT: 1=24 | DATE: 02/24/00 |

| NO. | REVISION DESCRIPTION | BY | DATE |
|---|---|---|---|
| A1 | CHANGED SHEET # | W.W.S. | 03/19/01 |
| B2 | ADDED ANCHORS AT SILL | K.P.S. | 08/08/05 |

DRAWING TITLE
OUTSWING FRENCH DOORS (DADE)

MANUFACTURER
ULTIMATE DOOR OF PALM BEACH, INC.
2800 2ND AVE. NORTH
LAKE WORTH, FL 33461
561-642-2828

CONSULTANTS
W. W. SCHAEFER ENGINEERING & CONSULTING, P.A. (CA 6809)
7480 150TH COURT NORTH
PALM BEACH GARDENS, FL 33418
PHONE: 561-744-3424

WARREN W. SCHAEFER LICENSE No 44135 STATE OF FLORIDA PROFESSIONAL ENGINEER

CERTIFICATION
MAR 11 2011
WARREN W. SCHAEFER, P.E.
P.E. NO. 44135

DRAWING NO. 1004A
REV. C
SHEET NO. 3 OF 8

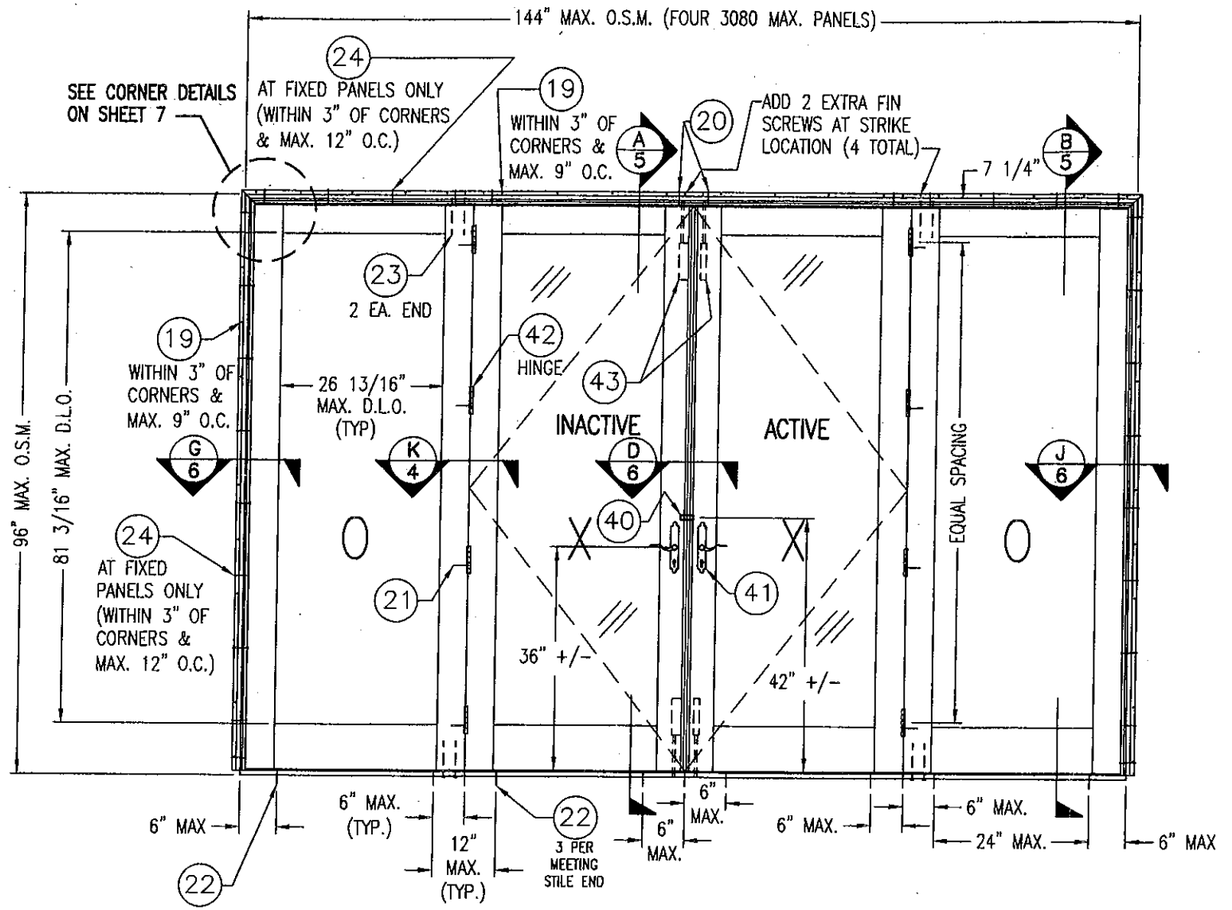


## QUAD DOOR/FIXED PANEL UNIT WITH MAX. 3080 PANELS

SCALE:1/2"=1'-0"

ALLOWABLE DESIGN LOADS = +48/-59 PSF FOR THIS UNIT

ALL ELEVATIONS VIEWED FROM EXTERIOR

O.S.M. = OUTSIDE MEASUREMENT

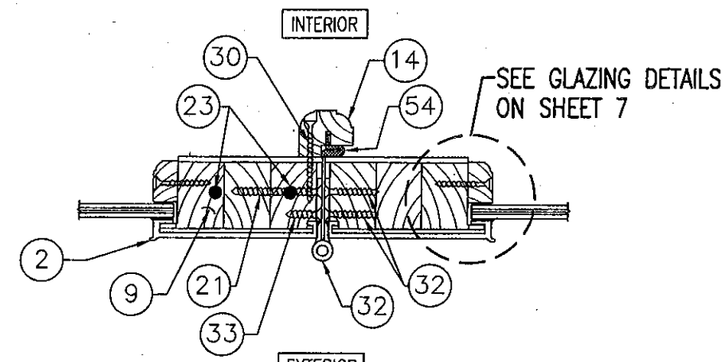


SECTION K/4

SCALE: 3"=1'-0"

PRODUCT RENEWED
as complying with the Florida
Building Code
Acceptance No 11-0310.01
Expiration Date 04/18/2012
By
Miami Dade Product Control

WARREN W. SCHAEFER LICENSE No. 44135 STATE OF FLORIDA PROFESSIONAL ENGINEER

| NO. | REVISION DESCRIPTION | BY | DATE |
|---|---|---|---|
| A1 | CHANGED SHEET # | W.W.S. | 03/13/01 |
| B2 | ADDED ANCHORS AT SILL | K.P.S. | 08/09/05 |
| B3 | CORRECTED SECTION & PART #'S | K.P.S. | 08/09/05 |

DRAWN BY: W.W.S. | CHECKED BY: W.W.S.
PLOT: 1=24 | DATE: 02/24/00

DRAWING TITLE: OUTSWING FRENCH DOORS (DADE)

MANUFACTURER: ULTIMATE DOOR OF PALM BEACH, INC.
2800 2ND AVE. NORTH
LAKE WORTH, FL 33461
561-642-2828

CONSULTANTS: W. W. SCHAEFER ENGINEERING & CONSULTING, P.A. (CA 6809)
7480 150TH COURT NORTH
PALM BEACH GARDENS, FL 33418
PHONE: 561-744-3424

CERTIFICATION: MAR 11 2011
WARREN W. SCHAEFER, P.E.
(P.E. NO. 44135)

DRAWING NO. 1004A | REV. C

SHEET NO. 4 OF 8

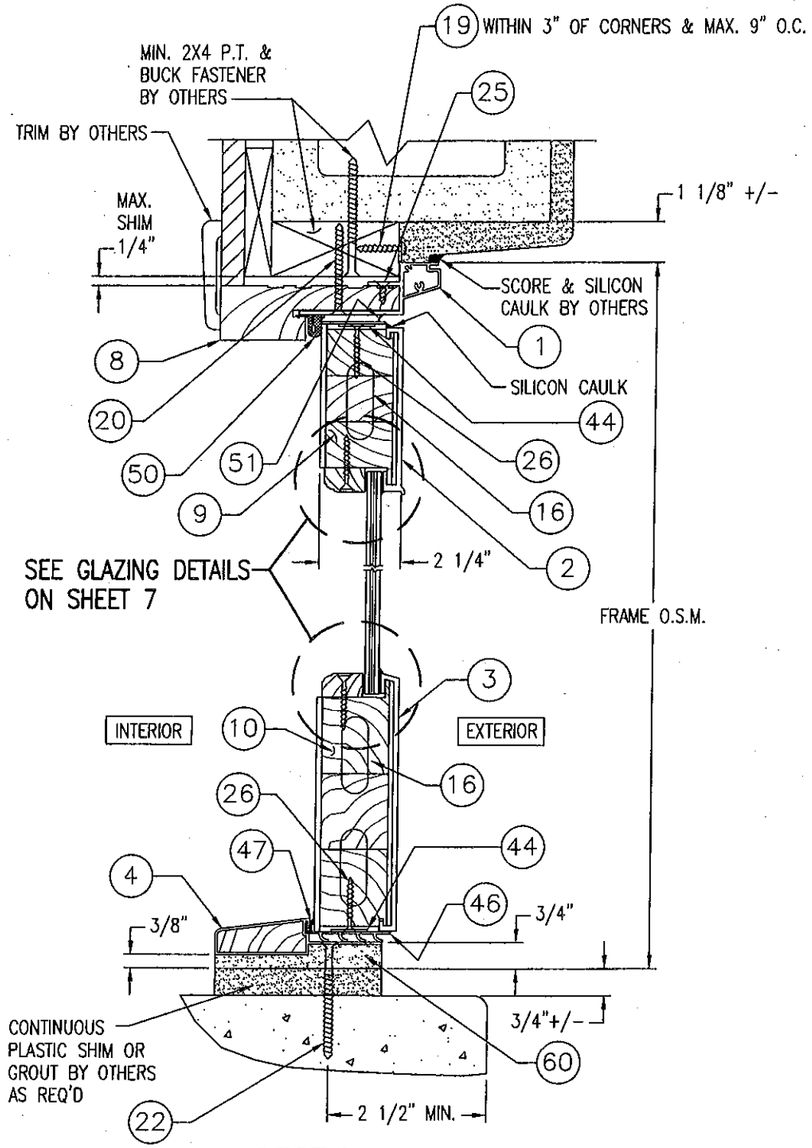


SECTION A/5 SCALE: 3"=1'-0" OPERABLE DOORS

SEE "OPTIONAL THRESHOLD DETAIL" ON THIS SHEET FOR 2ND TYPE OF THRESHOLD & SEALS.

SEE "GLAZING DETAIL 2" ON SHEET 7 FOR 2ND TYPE OF GLAZING STOP

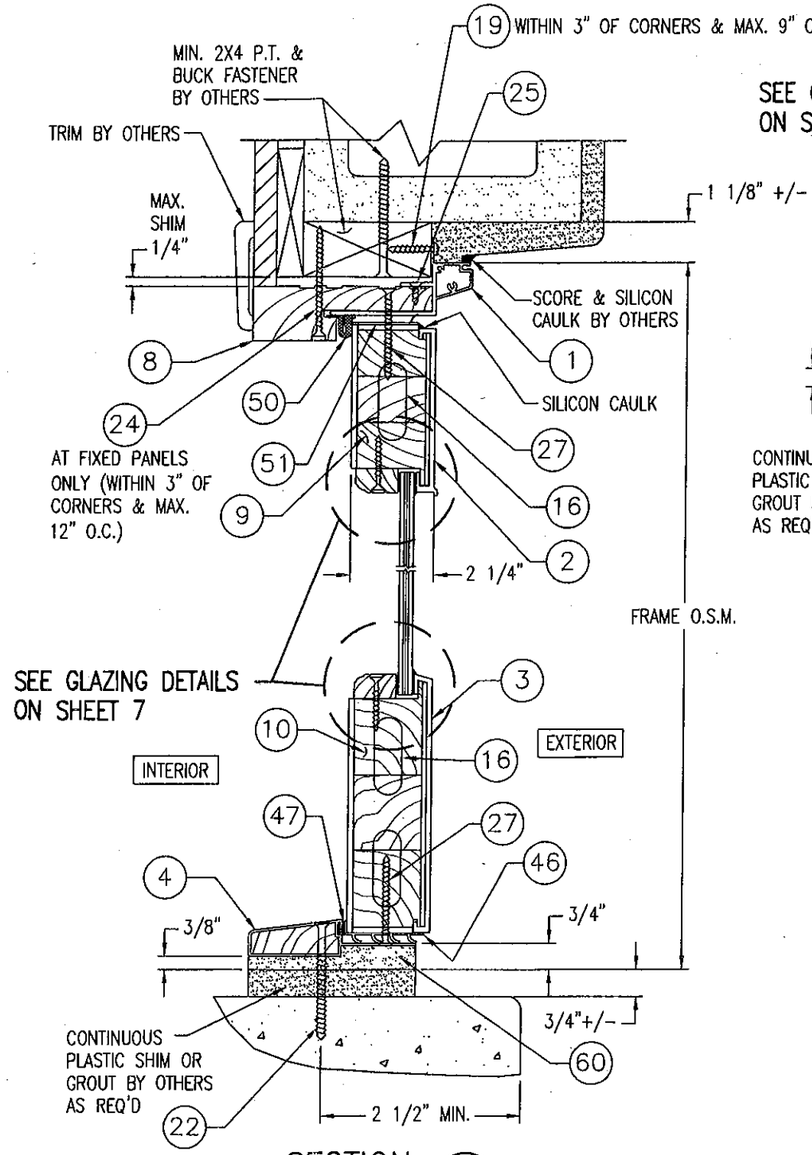


SECTION B/5 SCALE: 3"=1'-0" FIXED DOORS

SEE "OPTIONAL THRESHOLD DETAIL" ON THIS SHEET FOR 2ND TYPE OF THRESHOLD & SEALS.

SEE "GLAZING DETAIL 2" ON SHEET 7 FOR 2ND TYPE OF GLAZING STOP

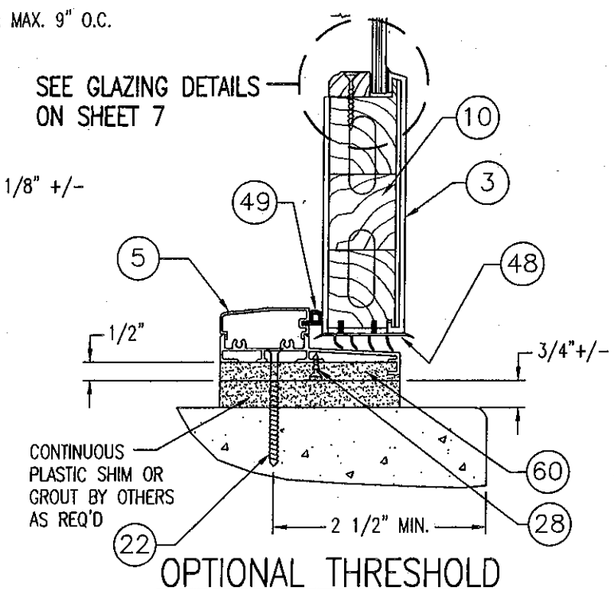


OPTIONAL THRESHOLD DETAIL

NOTE: SUB-THRESHOLD IS SILICONED TO ALUMINUM THRESHOLD

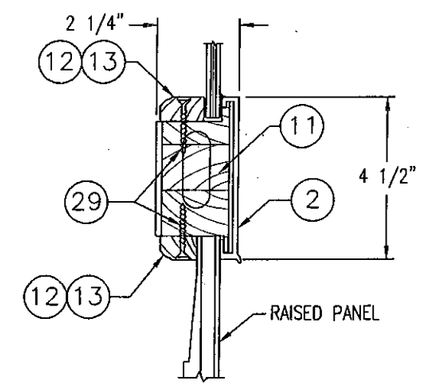


SECTION AA/5 SCALE: 3"=1'-0"

SEE ANCHOR REQUIREMENTS TABLE ON SHEET 1 & MATERIAL LIST ON SHEET 8 FOR ALL INSTALLATION REQUIREMENTS

PRODUCT RENEWED
as complying with the Florida
Building Code
Acceptance No 11-0310.01
Expiration Date 04/16/2012
By
Miami Dade Product Control

WARREN W. SCHAEFER LICENSE No. 44135 STATE OF FLORIDA PROFESSIONAL ENGINEER

| DRAWN BY: W.W.S. | CHECKED BY: W.W.S. |
|---|---|
| PLOT: 1=4 | DATE: 02/24/00 |

| NO. | REVISION DESCRIPTION | BY | DATE |
|---|---|---|---|
| A1 | CHANGED SHEET # | W.W.S. | 03/19/01 |

DRAWING TITLE: OUTSWING FRENCH DOORS (DADE)

MANUFACTURER: ULTIMATE DOOR OF PALM BEACH, INC.
2800 2ND AVE. NORTH
LAKE WORTH, FL 33461
561-642-2828

CONSULTANTS: W. W. SCHAEFER ENGINEERING & CONSULTING, P.A. (CA 6809)
7480 150TH COURT NORTH
PALM BEACH GARDENS, FL 33418
PHONE: 561-744-3424

CERTIFICATION: MAR 11 2011
WARREN W. SCHAEFER, P.E.
P.E. NO. 44135

DRAWING NO. 1004A REV. C

SHEET NO. 5 OF 8

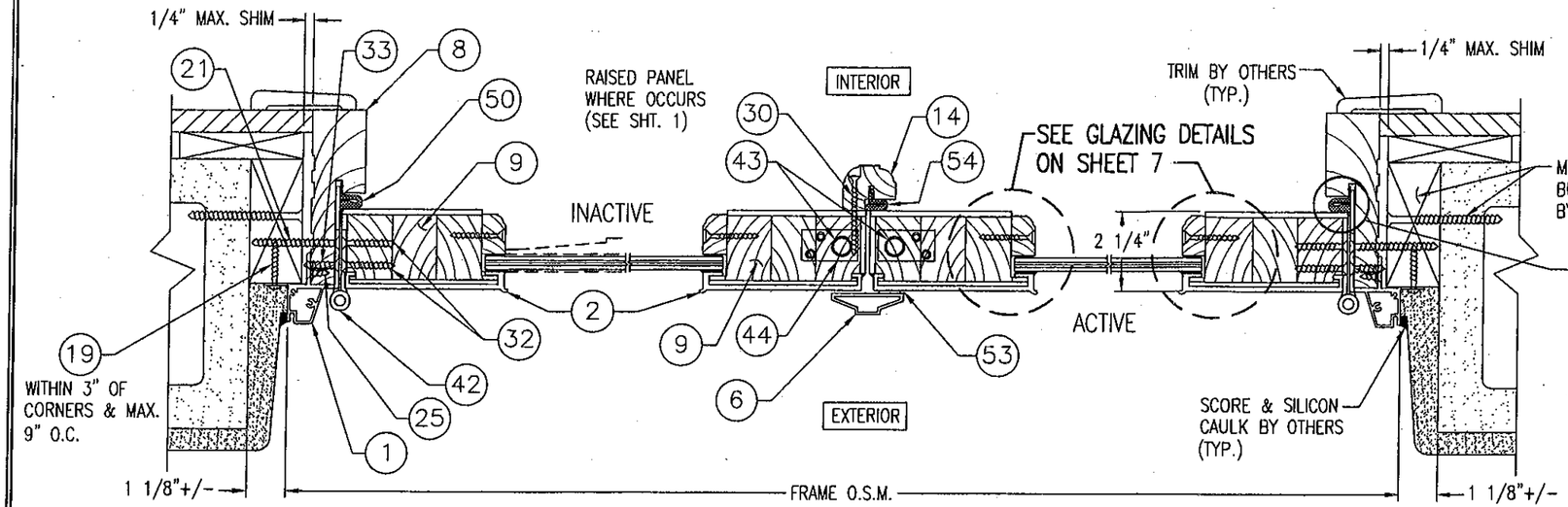


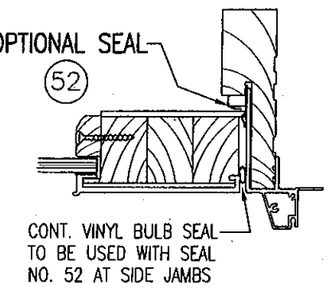


SECTION C/6
SCALE: 3"=1'-0"

SEE "OPTIONAL STILE/GLAZING DETAIL" ON SHEET 7 FOR 2ND TYPE OF STILE &. GLAZING STOP

SECTION D/6
SCALE: 3"=1'-0"
OPERABLE DOORS

SECTION E/6
SCALE: 3"=1'-0"

SEE "OPTIONAL STILE/GLAZING DETAIL" ON SHEET 7 FOR 2ND TYPE OF STILE &. GLAZING STOP

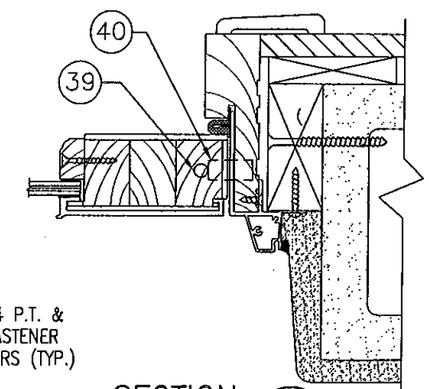


SECTION F/6
SCALE: 3"=1'-0"

SEE SECTION E/5 ON THIS SHEET FOR DETAIL NOT SHOWN.

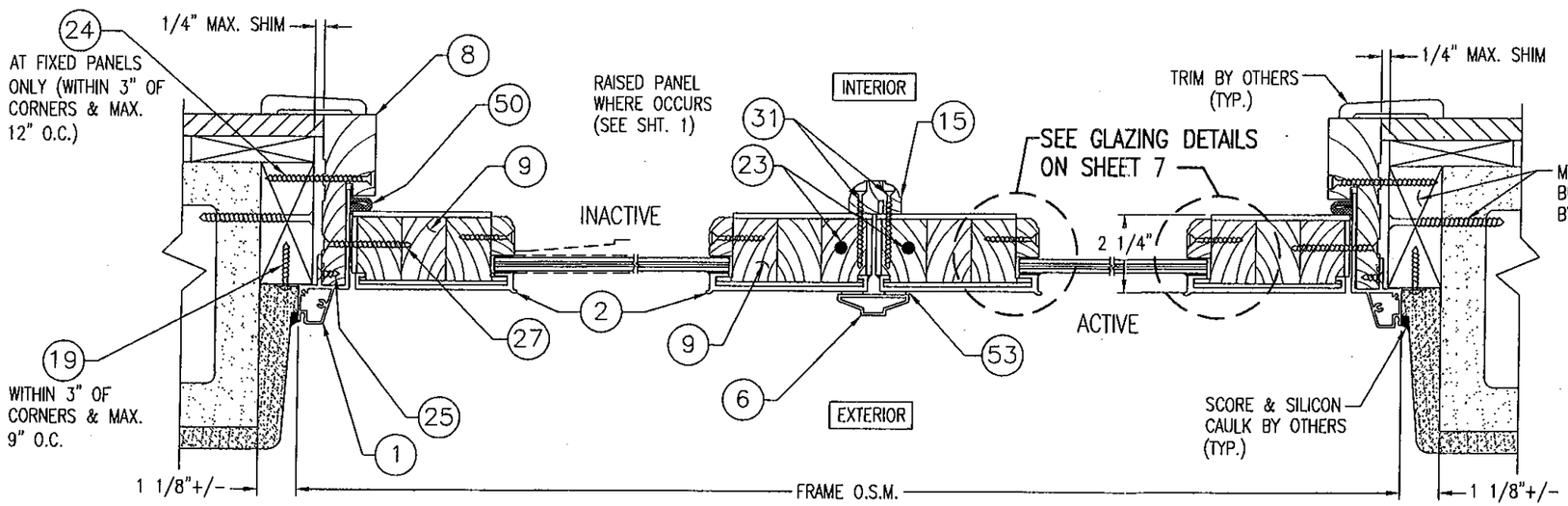


SECTION G/6
SCALE: 3"=1'-0"

SEE "OPTIONAL STILE/GLAZING DETAIL" ON SHEET 7 FOR 2ND TYPE OF STILE &. GLAZING STOP

SECTION H/6
SCALE: 3"=1'-0"
FIXED DOORS

SECTION J/6
SCALE: 3"=1'-0"

SEE "OPTIONAL STILE/GLAZING DETAIL" ON SHEET 7 FOR 2ND TYPE OF STILE &. GLAZING STOP

SEE ANCHOR REQUIREMENTS TABLE ON SHEET 1 & MATERIAL LIST ON SHEET 8 FOR ALL INSTALLATION REQUIREMENTS

PRODUCT RENEWED
as complying with the Florida
Building Code
Acceptance No 11-0319.01
Expiration Date 04/16/2012
By
Miami Dade Product Control

WARREN W. SCHAEFER LICENSE No. 44135 STATE OF FLORIDA PROFESSIONAL ENGINEER

| NO. | REVISION DESCRIPTION | BY | DATE |
|---|---|---|---|
| A1 | CHANGED SHEET # | W.W.S. | 03/19/01 |

DRAWN BY: W.W.S. | CHECKED BY: W.W.S.
PLOT: 1=4 | DATE: 02/24/00

DRAWING TITLE: OUTSWING FRENCH DOORS (DADE)

MANUFACTURER: ULTIMATE DOOR OF PALM BEACH, INC.
2800 2ND AVE. NORTH
LAKE WORTH, FL 33461
561-642-2828

CONSULTANTS: W. W. SCHAEFER ENGINEERING & CONSULTING, P.A. (CA 6809)
7480 150TH COURT NORTH
PALM BEACH GARDENS, FL 33418
PHONE: 561-744-3424

CERTIFICATION: MAR 11 2011
WARREN W. SCHAEFER, P.E. P.E. NO. 44135

DRAWING NO. 1004A | REV. C
SHEET NO. 6 OF 8

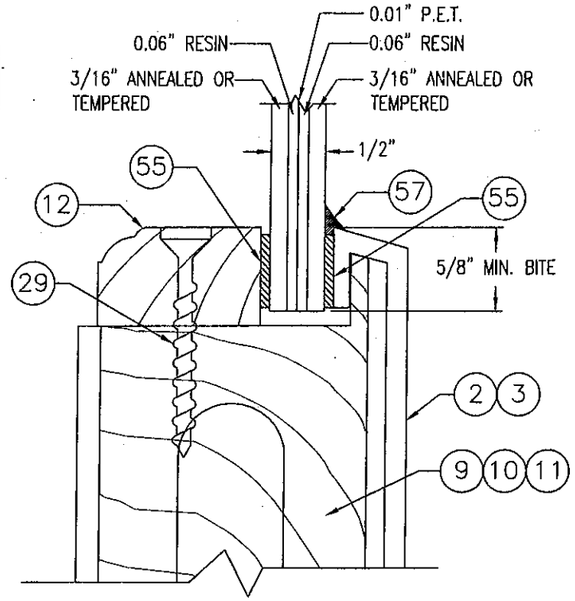


## GLAZING DETAIL 1

NEBULA SAFETY-PLUS II LAMINATED GLASS
(THIS DETAIL MAY BE USED WITH ALL DOOR SIZES)
SCALE: FULL SIZE

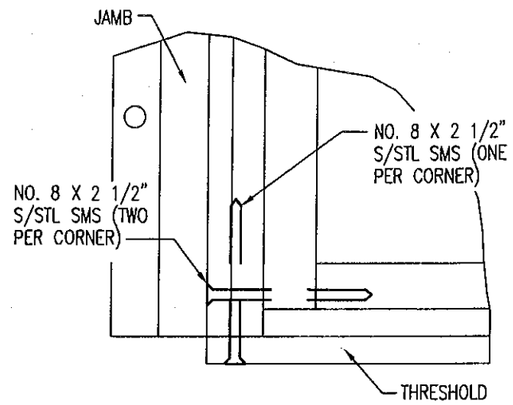


## JAMB TO THRESHOLD CORNER

SCALE: N.T.S.
CORNER IS ALSO GLUED

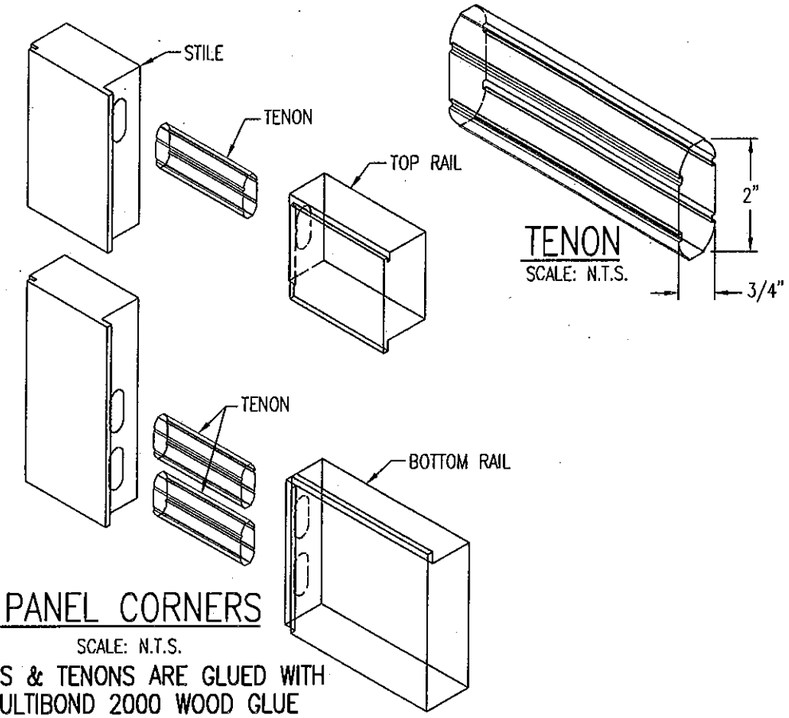


## TENON

SCALE: N.T.S.

## PANEL CORNERS

SCALE: N.T.S.
CORNERS & TENONS ARE GLUED WITH MULTIBOND 2000 WOOD GLUE

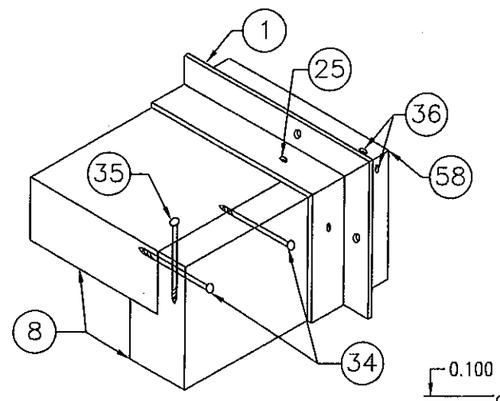


## JAMB-JAMB CORNER

SCALE: N.T.S.
CORNER IS ALSO GLUED

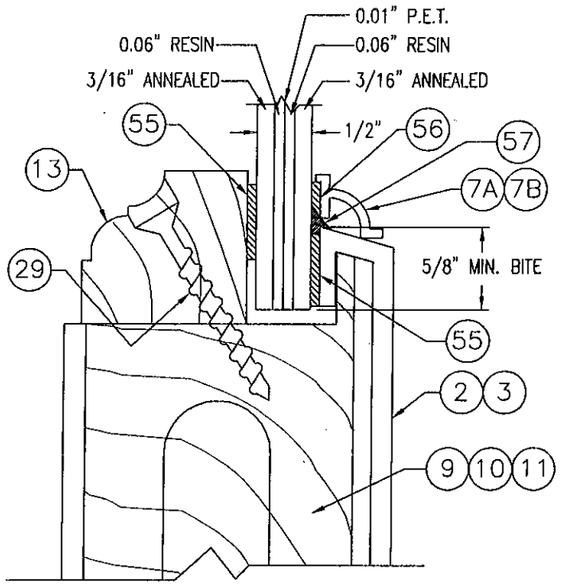


## GLAZING DETAIL 2

NEBULA SAFETY-PLUS II LAMINATED GLASS
(THIS DETAIL MAY BE USED WITH DOOR SIZES 39"X96" AND SMALLER)
SCALE: FULL SIZE

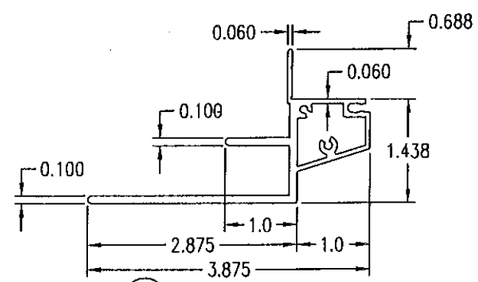


1 JAMB CLAD
6063-T5 ALUMINUM

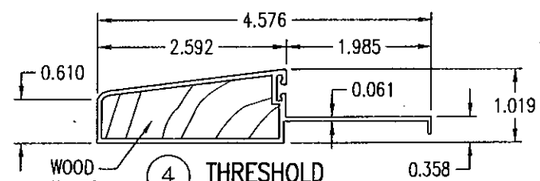


4 THRESHOLD
6063-T5 ALUMINUM

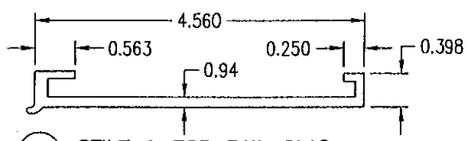


2 STILE & TOP RAIL CLAD
6063-T5 ALUMINUM

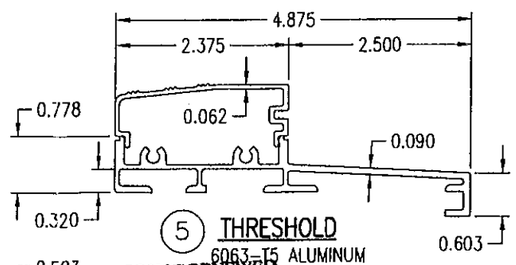


5 THRESHOLD
6063-T5 ALUMINUM

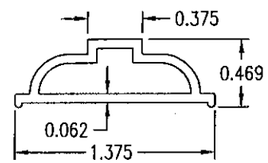


6 ASTRIGAL CAP
6063-T5 ALUMINUM

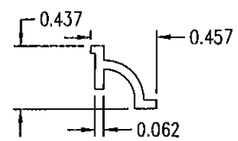


7A GLAZING CAP
6063-T5 ALUMINUM

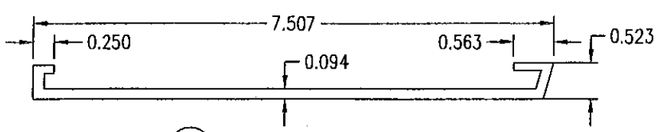


3 BOTTOM RAIL CLAD
6063-T5 ALUMINUM

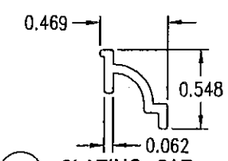


7B GLAZING CAP
6063-T5 ALUMINUM

PRODUCT RENEWED
as complying with the Florida
Building Code
Acceptance No. 11-0310.01
Expiration Date 04/16/2012
By
Miami Dade Product Control

LICENSE
WARREN W. SCHAEFER
No. 44135
STATE OF FLORIDA
PROFESSIONAL ENGINEER

| DRAWN BY: W.W.S. | CHECKED BY: W.W.S. |
|---|---|
| PLOT: 1=1 | DATE: 02/24/00 |

| NO. | REVISION DESCRIPTION | BY | DATE |
|---|---|---|---|
| A1 | CHANGED SHEET # | W.W.S. | 03/19/01 |

DRAWING TITLE
OUTSWING FRENCH DOORS (DADE)

MANUFACTURER
ULTIMATE DOOR OF PALM BEACH, INC.
2800 2ND AVE. NORTH
LAKE WORTH, FL 33461
561-642-2828

CONSULTANTS
W. W. SCHAEFER ENGINEERING & CONSULTING, P.A. (CA 6809)
7480 150TH COURT NORTH
PALM BEACH GARDENS, FL 33418
PHONE: 561-744-3424

CERTIFICATION
MAR 11 2011
WARREN W. SCHAEFER, P.E.
P.E. NO. 44135

DRAWING NO. 1004A
REV. C
SHEET NO. 7 OF 8

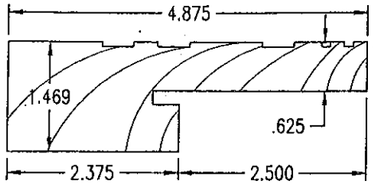


(8) JAMB
PONDEROSA PINE

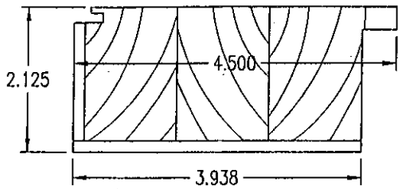


(9) STILE & TOP RAIL
PONDEROSA PINE

ALL ARE DRAWN AT 1/2 FULL SIZE

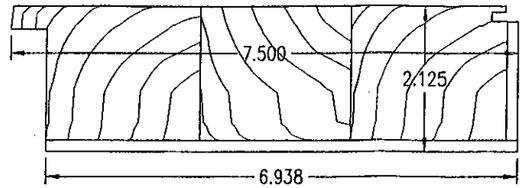


(10) BOTTOM RAIL
PONDEROSA PINE

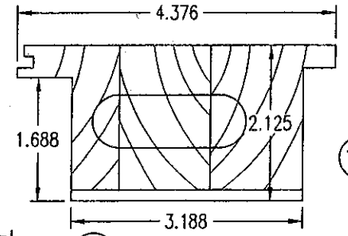


(11) RAISED PANEL RAIL
PONDEROSA PINE

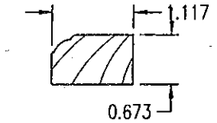


(12) GLAZING STOP
PONDEROSA PINE

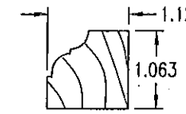


(13) OPTIONAL GLAZING STOP
PONDEROSA PINE

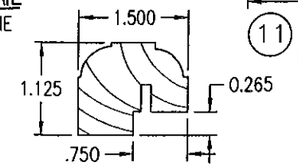


(14) ACTIVE ASTRIGAL
PONDEROSA PINE

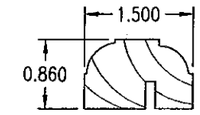


(15) FIXED ASTRIGAL
PONDEROSA PINE

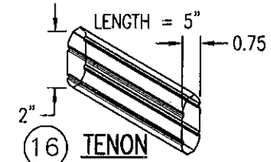


(16) TENON
HARD WOOD
N.T.S.

## MATERIAL LIST

| NO. | DESCRIPTION | NOTES |
|---|---|---|
| | **PARTS & EXTRUSIONS** | |
| 1 | JAMB CLAD | |
| 2 | STILE & TOP RAIL CLAD | |
| 3 | BOTTOM RAIL CLAD | |
| 4 | THRESHOLD (OPTION 1) | SINGLE SECTION ALUMINUM WITH WOOD FILLER |
| 5 | THRESHOLD (OPTION 2) | 2 SECTION ALUMINUM |
| 6 | ASTRIGAL CAP | |
| 7A | GLAZING CAP | USED WITH STILES & TOP RAIL (OPTIONAL) |
| 7B | GLAZING CAP | USED WITH BOTTOM RAIL (OPTIONAL) |
| 8 | WOOD JAMB | |
| 9 | WOOD STILE & TOP RAIL | STAGE BLOCK (3 BLOCKS) |
| 10 | WOOD BOTTOM RAIL | STAGE BLOCK (3 BLOCKS) |
| 11 | RAISED PANEL RAIL | STAGE BLOCK (3 BLOCKS) |
| 12 | 5/8 X 1 1/8 WOOD GLAZING STOP | MAY BE USED WITH ALL DOOR SIZES |
| 13 | 1 1/16 X 1 1/8 GLAZING STOP | TO BE USED ONLY WITH 3080/6080 DOOR SIZES & SMALLER |
| 14 | WOOD ASTRIGAL | FOR USE WITH OPERABLE DOORS |
| 15 | WOOD ASTRIGAL | FOR USE WITH FIXED PANEL DOORS |
| 16 | WOOD TENON | 1 PER TOP RAIL CORNER/2 PER BOTTOM RAIL CORNER |
| 17 | OPEN | |
| | **FASTENERS** | |
| 19 | NO. 8 X 1 1/4 SMS SCREWS (FIN ATTACHMENT) | 3" FROM CORNERS & MAX. 9" O.C. |
| 20 | NO. 12 SMS SCREWS | 2 AT HEAD JAMB INTO BUCK MIN 1 1/4" (1 EA. SIDE OF MIDPOINT 4" APART) |
| 21 | NO. 12 S/STL SMS | ONE PER HINGE THROUGH JAMB & INTO BUCK OR FIXED PANEL MIN. 1 1/4" |
| 22 | 1/4" TAPCON OR CR-10 CONCRETE SCREW | WHERE SHOWN IN ELEVATIONS (MIN. 1 1/2" CONCR. EMBED) |
| 23 | 3/8" X 6" GALV. LAG BOLT WITH 1/4" WASHER | THROUGH HEAD JAMB & THRESHOLD INTO EA. PANEL @ FIXED DOORS |
| 24 | NO. 8 SQUARE SLOT FINISH SCREW | 3" FROM CORNERS & MAX 12" O.C. INTO BUCK MIN. 1 1/4" (ANGLE UP TO 20 DEG IF REQ'D) |
| 25 | NO. 8 X 5/8" HEX TEK SCREW | 2' FROM CORNER & MAX. 12" O.C. (CLAD TO JAMB) |
| 26 | NO. 6 X 1 1/2" S/STL SMS SCREW | 2 PER PANEL STRIKE PLATE |
| 27 | NO. 8 X 2 1/2" SMS SCREW | 4" FROM CORNERS & MAX. 9" O.C. (ALL SIDES OF FRAME) |
| 28 | NO. 6 X 5/8" SMS SCREW | 2" FROM ENDS & MAX. 16" O.C. (SUB-THRESHOLD TO THRESHOLD) |
| 29 | NO. 6 X 1 1/2" TRIM SCREW | 2" FROM CORNERS & MAX. 9" O.C. |
| 30 | NO. 7 X 2 1/4" SQUARE SLOT TRIM SCREW | 1 1/2" FROM ENDS & MAX. 11" O.C. (ASTRIGAL TO ACTIVE PANEL) |
| 31 | NO. 7 X 2 1/4" SQUARE SLOT TRIM SCREW | 1 1/2" FROM ENDS & MAX. 11" O.C. (ASTRIGAL TO EACH FIXED PANEL) |
| 32 | NO. 10 X 1 1/2" S/STL SMS SCREWS | 4 PER HINGE INTO PANEL |
| 33 | NO. 12 X 1" S/STL SMS SCREW | 3 PER HINGE INTO JAMB |
| 34 | NO. 8 X 2 1/2" GALV. DECK SCREWS | 2 PER JAMB CORNER (SIDE JAMB TO HEAD JAMB) |
| 35 | NO. 10 X 3 1/2" SMS SCREW | 1 PER JAMB CORNER (HEAD JAMB TO SIDE JAMB) |
| 36 | NO. 6 X 2" SMS SCREWS | 2 PER JAMB CLAD CORNER INTO CLAD SCREW BOSS |
| 37 | OPEN | |
| 38 | OPEN | |

## MATERIAL LIST

| NO. | DESCRIPTION | NOTES |
|---|---|---|
| | **HARDWARE** | |
| 39 | 3-POINT LOCK SYSTEM AT ACTIVE PANEL | SCHLEGEL BY FULEX CO. (MAY BE USED WITH ALL DOOR SIZES) |
| 40 | SCHLAGE DEAD BOLT NO. B162V4626 OR EQUAL | MAY ONLY BE USED WITH 6080/3080 DOORS & SMALLER |
| 41 | HANDLE | |
| 42 | 4 X 4 1/2 HAGER HINGE NO. 1191 | NICLEL PLATED BRASS WITH S/STL BALL BEARINGS |
| 43 | HAGER 458-B26D-12" FLUSH BOLT | 1 AT EA. TOP & BOTTOM OF EA. PANEL (W/3/8" S/STL THRU-BOLT) |
| 44 | 1" X 2 1/4" X 1/16" S/STL STRIKE PLATE | 1 AT EACH PANEL MEETING CORNER AT TOP & BOTTOM |
| 45 | OPEN | |
| | **SEALS & SEALANTS** | |
| 46 | KOROSEAL SWEEP NO. 48-28-3770-1 | FULL LENGTH OF BOTTOM RAIL |
| 47 | POLYMERIC BULB GASKET | CONTINUOUS AT THRESHOLD |
| 48 | KOROSEAL SWEEP NO. 28-28-1380-00-1 | FULL LENGTH OF BOTOM RAIL |
| 49 | KOROSEAL GASKET NO. 28-23-5210-00-1 | CONTINUOUS AT THRESHOLD |
| 50 | SCHLEGEL Q-LON 650 SEAL NO. A-6F16E | CONTINUOUS AT SIDE & HEAD JAMBS |
| 51 | RJF INTER. NO. 28-28-1120-00-1 SWEEP | CONTINUOUS AT TOP OF PANELS |
| 52 | KOROSEAL NO.. 28-23-5210-00-1 DOOR SEAL | CONTINUOUS AT SIDE JAMBS |
| 53 | PAK-LITE 1/16 X 9/16 (2) SIDED TAPE | CLOSED CELL URATHANE (ALUM ASTRIGAL CAP TO FIXED & ACTIVE PANELS) |
| 54 | SCHLEGEL Q-LON 650 SEAL NO. A-6F16E | CONTINUOUS AT INTERIOR ASTRIGAL |
| 55 | PAK-LITE 1/16 X 9/16 (2) SIDED TAPE | GLAZING TAPE CONTINUOUS AROUND EACH SIDE OF GLASS |
| 56 | PAK-LITE 1/16 X 1/4 (2) SIDED TAPE | ATTACHES DECORATIVE ALUMINUM GLAZING CAP TO GLASS |
| 57 | DOW CORNING 795 SILICON SEALANT | CAP BEAD CONTINUOUS AROUND EXTERIOR OF GLASS |
| 58 | DOW CORNING 795 SILICON SEALANT | SEALS JAMB CLAD CORNERS |
| 59 | OPEN | |
| | **OTHER** | |
| 60 | SUB-THRESHOLD | SEALS END GRAIN OF FRAME (SOLID PVC) |
| 61 | OPEN | |

1 WOOD USED IN TESTING WAS PONDEROSA PINE WITH A SPECIFIC GRAVITY OF G = 0.43 AND A MODULUS OF ELASTICITY OF E = 1,200,000 PSI. OTHER WOOD SPECIES APPLICABLE FOR USE WITH THIS PRODUCT ARE THOSE WITH A SPECIFIC GRAVITY OF 0.43 AND MODULUS OF ELASTICITY OF 1,200,000 PSI OR GREATER. ALL WOOD IS MINIMUM GRADE 2 MILLED BY ULTIMATE DOOR TO SELECT.

PRODUCT RENEWED
as complying with the Florida
Building Code
Acceptance No 11-0310.01
Expiration Date 04/16/2012
By
Miami Dade Product Control

WARREN W. SCHAEFER LICENSE No. 44135 STATE OF FLORIDA PROFESSIONAL ENGINEER

| DRAWN BY: W.W.S. | CHECKED BY: W.W.S. |
|---|---|
| PLOT: 1=2 | DATE: 02/24/00 |

| NO. | REVISION DESCRIPTION | BY | DATE |
|---|---|---|---|
| A1 | CHANGED SHEET # | W.W.S. | 03/19/01 |

DRAWING TITLE
OUTSWING FRENCH DOORS (DADE)

MANUFACTURER
ULTIMATE DOOR OF PALM BEACH, INC.
2800 2ND AVE. NORTH
LAKE WORTH, FL 33461
561-642-2828

CONSULTANTS
W. W. SCHAEFER ENGINEERING & CONSULTING, P.A. (CA 6809)
7480 150TH COURT NORTH
PALM BEACH GARDENS, FL 33418
PHONE: 561-744-3424

CERTIFICATION
MAR 11 2001
WARREN W. SCHAEFER, P.E.
P.E. NO. 44135

DRAWING NO. 104A REV. C
SHEET NO. 1 OF 8