MIAMI-DADE COUNTY

BUILDING AND NEIGHBORHOOD COMPLIANCE DEPARTMENT (BNC)
BOARD AND CODE ADMINISTRATION DIVISION

MIAMI-DADE COUNTY
PRODUCT CONTROL SECTION
11805 SW 26 Street, Room 208
Miami, Florida 33175-2474
T (786) 315-2590 F (786) 315-2599
www.miamidade.gov/building/

NOTICE OF ACCEPTANCE (NOA)

Iko Industries Ltd.
40 Hansen Rd. S.
Brampton, Ontario CANADA
L6W3H4

SCOPE:

This NOA is being issued under the applicable rules and regulations governing the use of construction materials. The documentation submitted has been reviewed and accepted by Miami-Dade County BNC - Product Control Section to be used in Miami Dade County and other areas where allowed by the Authority Having Jurisdiction (AHJ).

This NOA shall not be valid after the expiration date stated below. The Miami-Dade County Product Control Section (In Miami Dade County) and/or the AHJ (in areas other than Miami Dade County) reserve the right to have this product or material tested for quality assurance purposes. If this product or material fails to perform in the accepted manner, the manufacturer will incur the expense of such testing and the AHJ may immediately revoke, modify, or suspend the use of such product or material within their jurisdiction. BNC reserves the right to revoke this acceptance, if it is determined by Miami-Dade County Product Control Section that this product or material fails to meet the requirements of the applicable building code.
This product is approved as described herein, and has been designed to comply with the Florida Building Code including the High Velocity Hurricane Zone of the Florida Building Code.

DESCRIPTION: Hip & Ridge 12 Shingles

LABELING: Each unit shall bear a permanent label with the manufacturer's name or logo, city, state and following statement: "Miami-Dade County Product Control Approved", unless otherwise noted herein.

RENEWAL of this NOA shall be considered after a renewal application has been filed and there has been no change in the applicable building code negatively affecting the performance of this product.

TERMINATION of this NOA will occur after the expiration date or if there has been a revision or change in the materials, use, and/or manufacture of the product or process. Misuse of this NOA as an endorsement of any product, for sales, advertising or any other purposes shall automatically terminate this NOA. Failure to comply with any section of this NOA shall be cause for termination and removal of NOA.

ADVERTISEMENT: The NOA number preceded by the words Miami-Dade County, Florida, and followed by the expiration date may be displayed in advertising literature. If any portion of the NOA is displayed, then it shall be done in its entirety.

INSPECTION: A copy of this entire NOA shall be provided to the user by the manufacturer or its distributors and shall be available for inspection at the job site at the request of the Building Official.

This NOA consists of pages 1 through 4.
The submitted documentation was reviewed by Alex Tigera.

MIAMI-DADE COUNTY APPROVED

NOA No.: 11-0318.03
Expiration Date: 05/19/16
Approval Date: 05/19/11

ROOFING ASSEMBLY APPROVAL

Category: Roofing
Sub-Category: Asphalt Shingles
Materials N/A
Deck Type: Wood

SCOPE

This approves a roofing component, **Hip & Ridge 12 Shingles** manufactured by IKO Industries Ltd. as described in Section 2 of his Notice of Acceptance, designed to comply with the High Velocity Hurricane Zone of the Florida Building Code.

PRODUCT DESCRIPTION

Product	Dimensions	Test Specifications	Product Description
Hip & Ridge 12 Shingles	12 $^1/_4$" x 36"	TAS 110	A heavy weight, fiberglass reinforced monolayer asphalt hip and ridge shingle.

MANUFACTURING LOCATION

1. Brampton, Ontario

EVIDENCE SUBMITTED

Test Agency	Test Identifier	Test Name/Report	Date
PRI Construction Materials Inc.	IKO-067-02-01	TAS 100	11/10/10
FM Approvals	3041689	ASTM D 3462	02/23/11
FM Approvals	3040947	ASTM D 3161 (TAS-107)	02/08/11
FM Approvals	3010968	ASTM E 108	01/15/02

LIMITATIONS

1. Fire classification is not part of this acceptance; refer to a current Approved Roofing Materials Directory for fire ratings of this product.
2. Shall not be installed on roof mean heights in excess of 33 ft.
3. All products listed herein shall have a quality assurance audit in accordance with the Florida Building Code and Rule 9B-72 of the Florida Administrative Code.

INSTALLATION

1. Shingles shall be installed in accordance with Roofing Application Standard RAS 115.
2. The manufacturer shall provide clearly written application instructions.
3. Exposure and course layout shall be in compliance with Detail 'A', attached.
4. Nailing shall be in compliance with Detail 'A', attached.

LABELING

1. Shingles shall be labeled with the Miami-Dade Seal as seen below, or the wording "Miami-Dade County Product Control Approved".

BUILDING PERMIT REQUIREMENTS

1. Application for building permit shall be accompanied by copies of the following:
   1.1 This Notice of Acceptance.
   1.2 Any other documents required by the Building Official or the applicable code in order to properly evaluate the installation of this system.

DETAIL A

HIP & RIDGE 12 SHINGLES COURSE LAYOUT

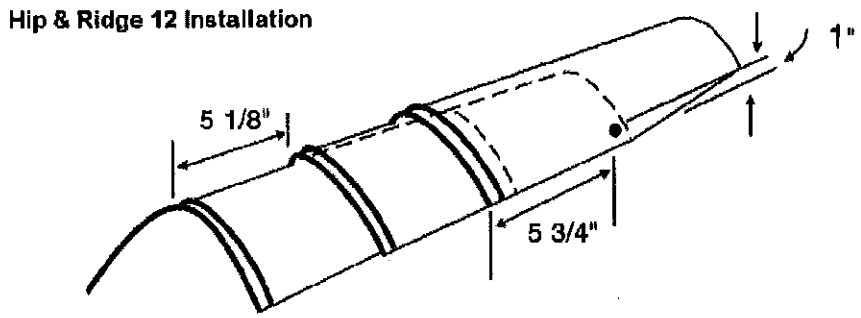

DETAIL B

HIP & RIDGE 12 SHINGLES

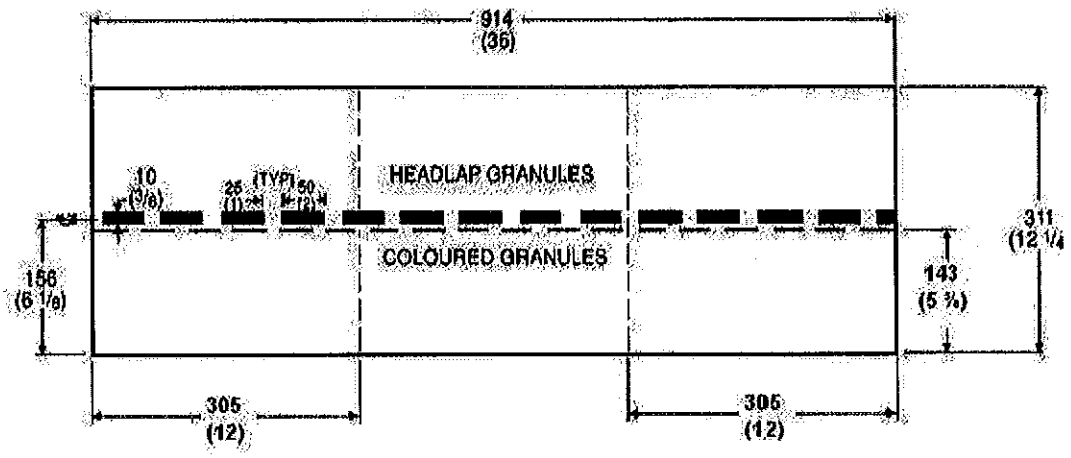

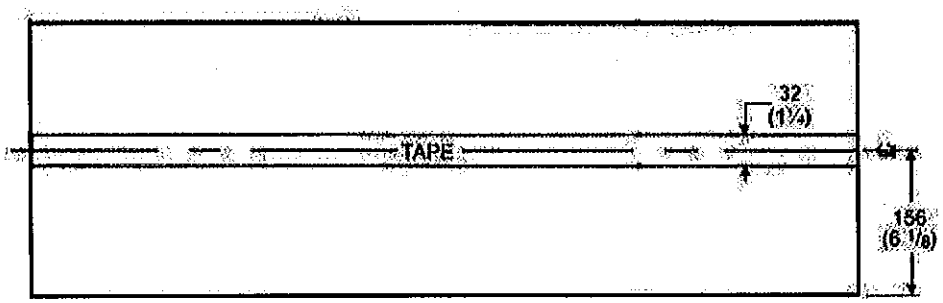

END OF THIS ACCEPTANCE