MIAMI-DADE COUNTY
BUILDING AND NEIGHBORHOOD COMPLIANCE DEPARTMENT (BNC)
BOARD AND CODE ADMINISTRATION DIVISION

MIAMI-DADE COUNTY
PRODUCT CONTROL SECTION
11805 SW 26 Street, Room 208
Miami, Florida 33175-2474
T (786) 315-2590 F (786) 315-2599
www.miamidade.gov/building

NOTICE OF ACCEPTANCE (NOA)

Perfect Storm Shutters, Inc.
12334 SW 131 Avenue
Miami, Florida 33186

SCOPE:
This NOA is being issued under the applicable rules and regulations governing the use of construction materials. The documentation submitted has been reviewed and accepted by Miami-Dade County BNC-Product Control Section to be used in Miami Dade County and other areas where allowed by the Authority Having Jurisdiction (AHJ).

This NOA shall not be valid after the expiration date stated below. The Miami-Dade County Product Control Section (In Miami Dade County) and/or the AHJ (in areas other than Miami Dade County) reserve the right to have this product or material tested for quality assurance purposes. If this product or material fails to perform in the accepted manner, the manufacturer will incur the expense of such testing and the AHJ may immediately revoke, modify, or suspend the use of such product or material within their jurisdiction. BNC reserves the right to revoke this acceptance, if it is determined by Miami-Dade County Product Control Section that this product or material fails to meet the requirements of the applicable building code.

This product is approved as described herein, and has been designed to comply with the High Velocity Hurricane Zone of the Florida Building Code.

DESCRIPTION: " Bertha HV " Aluminum Accordion Shutter System

APPROVAL DOCUMENT: Drawing No. 11-030, titled "Bertha HV Accordion Shutter System", sheets 1 through 28 of 28, and sheet 28A of 28, prepared by Tilteco, Inc., dated March 24, 2011, signed and sealed by Walter A. Tillit Jr., P.E., bearing the Miami-Dade County Product Control Revision stamp with the Notice of Acceptance number and the expiration date by the Miami-Dade County Product Control Section.

MISSILE IMPACT RATING: Large and Small Missile Impact Resistant

LABELING: Each unit shall bear a permanent label with the manufacturer's name or logo, city, state, the following statement: "Miami-Dade County Product Control Approved", and NOA number, per TAS-201, TAS-202, and TAS-203, unless otherwise noted herein.

RENEWAL of this NOA shall be considered after a renewal application has been filed and there has been no change in the applicable building code negatively affecting the performance of this product.

TERMINATION of this NOA will occur after the expiration date or if there has been a revision or change in the materials, use, and/or manufacture of the product or process. Misuse of this NOA as an endorsement of any product, for sales, advertising or any other purposes shall automatically terminate this NOA. Failure to comply with any section of this NOA shall be cause for termination and removal of NOA.

ADVERTISEMENT: The NOA number preceded by the words Miami-Dade County, Florida, and followed by the expiration date may be displayed in advertising literature. If any portion of the NOA is displayed, then it shall be done in its entirety.

INSPECTION: A copy of this entire NOA shall be provided to the user by the manufacturer or its distributors and shall be available for inspection at the job site at the request of the Building Official.
This NOA **revises & renews NOA # 06-0111.06** and consists of this page 1, evidence submitted pages E-1 & E-2 as well as approval document mentioned above.
The submitted documentation was reviewed by **Helmy A. Makar, P.E., M.S.**

MIAMI-DADE COUNTY APPROVED

Helmy A. Makar
07/28/2011

NOA No. 11-0325.02
Expiration Date: 03/23/2016
Approval Date: 07/28/2011

Perfect Storm Shutters, Inc.

NOTICE OF ACCEPTANCE: EVIDENCE SUBMITTED

1. EVIDENCE SUBMITTED UNDER PREVIOUS APPROVAL # 06-0111.06

A. DRAWINGS

1. *Drawing No. 05-381, titled "Bertha HV Accordion Shutter System", sheets 1 through 14 of 14, prepared by Tilteco, Inc., dated December 16, 2005, signed and sealed by Walter A. Tillit Jr., P.E.*

B. TESTS

1. *See Association's generic approval under 05-0227.*

C. CALCULATIONS

1. *See Association's generic approval under 05-0227.*

D. QUALITY ASSURANCE

1. *By Miami-Dade Building Code Compliance Office.*

E. MATERIAL CERTIFICATIONS

1. *See Association's generic approval under 05-0227.*

F. STATEMENTS

1. *Release letter issued by American Shutter Systems Association, dated December 14, 2005, certifying this product to meet the criteria of product tested and approved, and allowing Perfect Storm Shutters, Inc. to use the test results approved under Miami-Dade County Approval No.05-0227, signed by Legny Santana.*
2. *Acknowledgment letter by Perfect Storm Shutters, Inc., dated December 28, 2005, signed by Jose E. Romero.*
3. *Letter by Tilteco Inc., dated December 16, 2005, certifying that the drawing (No. 05-381) prepared for Perfect Storm Shutters, Inc, signed and sealed by Mr. Walter A. Tillit, Jr., P.E., is engineering wise identical to ASSA's generic drawing (No. 05-072).*

2. NEW EVIDENCE SUBMITTED

A. DRAWINGS

1. *Drawing No. 11-030, titled "Bertha HV Accordion Shutter System", sheets 1 through 28 of 28, and sheet 28A of 28, prepared by Tilteco, Inc., dated March 24, 2011, signed and sealed by Walter A. Tillit Jr., P.E.*

Helmy A. Makar, P.E., M.S.
BNC, Product Control Unit Supervisor
NOA No. 11-0325.02
Expiration Date: 03/23/2016
Approval Date: 07/28/2011

NOTICE OF ACCEPTANCE: EVIDENCE SUBMITTED

B. TESTS

1. *See Association's generic approval under 10-1209.*

C. CALCULATIONS

1. *See Association's generic approval under 10-1209.*

D. QUALITY ASSURANCE

1. *By Miami-Dade Building and Neighborhood Compliance Department (BNC).*

E. MATERIAL CERTIFICATIONS

1. *See Association's generic approval under 10-1209.*

F. STATEMENTS

1. *Release letter issued by American Shutter Systems Association, dated March 23, 2011, certifying this product to meet the criteria of product tested and approved, and allowing Perfect Storm Shutters, Inc. to use the test results approved under Miami-Dade County Approval No.10-1209, signed by Legny Santana.*
2. *Acknowledgment letter by Perfect Storm Shutters, Inc., dated March 23, 2011, signed by Jose E. Romero.*
3. *Letter by Tilteco Inc., dated March 23, 2011, certifying that the drawing (No. 11-030) prepared for Perfect Storm Shutters, Inc, signed and sealed by Mr. Walter A. Tillit, Jr., P.E., is engineering wise identical to ASSA's generic drawing (No. 10-099).*

Helmy A. Makar, P.E., M.S.
BNC, Product Control Unit Supervisor
NOA No. 11-0325.02
Expiration Date: 03/23/2016
Approval Date: 07/28/2011

GENERAL NOTES:

1. BERTHA H.V. ACCORDION SHUTTER SYSTEM SHOWN ON THIS PRODUCT APPROVAL DOCUMENT (P.A.D.) HAS BEEN VERIFIED FOR COMPLIANCE IN ACCORDANCE WITH THE 2007 EDITION OF THE FLORIDA BUILDING CODE.
   THIS ACCORDION SHUTTER SYSTEM MAY BE INSTALLED AT HIGH VELOCITY HURRICANE ZONES. DESIGN WIND LOADS SHALL BE DETERMINED AS PER SECTION 1620 OF THE ABOVE MENTIONED CODE. IN ORDER TO VERIFY THAT ANCHORS ON THIS P.A.D., AS TESTED, WERE NOT OVERSTRESSED, A 33 % INCREASE IN ALLOWABLE LOADS FOR WIND LOADS WAS NOT USED IN THEIR ANALYSIS. BERTHA H.V. ACCORDION SHUTTER SYSTEM'S ADEQUACY FOR WIND AND LARGE MISSILE IMPACT LOAD HAS BEEN VERIFIED IN ACCORDANCE WITH SECTION 1626 OF THE ABOVE MENTIONED CODE AS PER ATL REPORTS:

   –HV BLADE ① #0214.01–03, #0715.01–03, #1004.01–05, #1214.01–05, #0317.02–06 AND #0609.01–10 AS PER TAS 201, TAS 202 AND TAS 203 PROTOCOLS.

   –HV WINDOW BLADE ⑴A #0505.01–08 AS PER TAS 201, 202 & 203 PROTOCOLS AND 0725.01–08 AS PER TAS 202 PROTOCOL.

   –HV BLADE ② #0422.01–05 AS PER TAS 201, TAS 202 AND TAS 203 PROTOCOLS.

2. HV BLADE ① AND HV BLADE ② ARE ENGINEERED TO WORK IN UNISON WITH EACH OTHER IN AREAS WHERE THE DESIGN PRESSURES TRANSITION FROM END ZONE 5 TO INTERIOR ZONE 4. EACH WIND ZONE MUST BE CLEARLY IDENTIFIED IN ACCORDANCE WITH SECTION 6, OF ASCE 7–05 STANDARD. ALL MOUNTING CONDITIONS AND FASTENER TYPES SCHEDULES MUST BE APPLIED TO THE CORRESPONDING WIND ZONE. THIS SHALL INCLUDE REQUIREMENTS FOR MIN. SEPARATION TO GLASS. DELIMITATION OF WIND ZONES 4 AND 5 AS WELL AS VALIDITY OF COMPONENTS FOR HV BLADE 1 & 2 ACCORDION SHUTTERS SYSTEMS FOR EITHER WIND ZONE SHALL BE PREPARED AND CERTIFIED BY A FLORIDA REGISTERED ENGINEER OR ARCHITECT BASED ON BUILDING CONFIGURATION AND ASCE 7–05 STANDARD, AND SHALL BE SUBMITTED TO THE BUILDING OFFICIAL AT THE TIME PERMIT IS APPLIED FOR.
   HV BLADE ① AND HV WINDOW BLADE ⑴A ARE ALSO ENGINEERED TO WORK IN UNISON WITH EACH OTHER UNDER THE GENERAL LIMITATIONS AND CONDITIONS OF USE INDICATED ON SHEET 28.

3. BERTHA H.V. ACCORDION PINS (HV SCREWS), USED AT BLADES KNUCKLE AND FOR DIRECT MOUNT CONNECTION TO TRACKS SHALL BE # 14X2.75 AND # 14X1.75 RESPECTIVELY, 410–HT MINIMUM SERIES STAINLESS STEEL SCREWS WITH 135.0 ksi YIELD STRENGTH AND 180 ksi TENSILE STRENGTH. PINS SHALL BE COATED WITH BERTHA HV DACROSHIELD COATING SYSTEM AS MANUFACTURED BY APPROVED COATING APPLICATORS, REGISTERED WITH AMERICAN SHUTTER SYSTEMS ASSOCIATION. PINS MUST BEAR THE HV MARKING ON THEIR HEAD.

4. ALL ALUMINUM EXTRUSIONS SHALL BE ALUMINUM ASSOCIATION ALLOY AND TEMPER AS INDICATED ON SHEETS 2 AND 3. MINIMUM YIELD STRENGTH FOR 6063–T6 ALLOY IS 31.7 ksi AND 35.7 ksi FOR 6005–T5 ALLOY.

5. ALL SCREWS TO BE STAINLESS STEEL 304 OR 316 AISI SERIES OR CORROSION RESISTANT COATED CARBON STEEL AS PER DIN 50018 WITH 50 ksi MIN. YIELD STRENGTH AND 90 ksi MIN. TENSILE STRENGTH.

6. BOLTS TO BE ASTM A–307 GALVANIZED STEEL, OR AISI 304 OR 316 SERIES STAINLESS STEEL WITH 35 ksi MINIMUM YIELD STRENGTH.

7. SEE THE FOLLOWING SHEETS FOR ANCHOR SPECIFICATIONS: HV BLADE ① : 13, 14, 15, 16, 17 AND 28A.
   HV BLADE ② : 26.
   HV BLADE ① & ⑴A WORKING IN UNISON: 13, 14 & 16.

8. THIS BERTHA H.V. ACCORDION SHUTTER SYSTEM BEARS A U.S. PATENT #6'779,582. COMPONENTS OF THIS APPROVAL ARE COVERED, IN WHOLE OR IN PART BY U.S. PATENT #5'458,179 ISSUED TO EASTERN METAL SUPPLY, INC.

9. IT SHALL BE THE RESPONSIBILITY OF THE CONTRACTOR TO VERIFY THE SOUNDNESS OF THE STRUCTURE WHERE SHUTTER IS TO BE ATTACHED TO INSURE PROPER ANCHORAGE. CONTRACTOR TO SEAL/CAULK ALL SHUTTER COMPONENT EDGES WHICH REMAIN, THRU FASTENING IN CONTINUOUS CONTACT WITH THE BUILDING TO PREVENT WIND/RAIN INTRUSION.

10. EACH UNIT MUST BEAR PERMANENT LABEL IN A VISIBLE PLACE WITH WARNING NOTE: DURING PERIODS OF HURRICANE WARNINGS HOME OWNER, TENANT, OR OTHERS, MUST PROPERLY CLOSE ALL HV AND HD CENTERMATES AND ENGAGE OR LOCK ALL HV AND HD LOCKS.

11. A PERMANENT SHUTTER MANUFACTURER'S LABEL SHALL BE PLACED ON THE EXPOSED SURFACE OF THE SIDE RAIL APPROXIMATELY 4" BELOW THE TOP OF SUCH RAIL LABEL SHALL READ AS FOLLOWS:
    PERFECT STORM SHUTTERS, INC
    MIAMI, FL.
    MIAMI – DADE COUNTY PRODUCT CONTROL APPROVED.

12. BERTHA H.V. ACCORDION SHUTTER SYSTEM'S INSTALLATION SHALL COMPLY WITH SPECS INDICATED IN THIS DRAWING PLUS ANY BUILDING AND ZONING REGULATIONS PROVIDED BY THE JURISDICTION WHERE PERMIT IS APPLIED TO.

13. (a) THIS P.A.D. PREPARED BY THIS ENGINEER IS GENERIC AND DOES NOT PROVIDE INFORMATION FOR A SITE SPECIFIC PROJECT; i.e. WHERE THE SITE CONDITIONS DEVIATE FROM THE P.A.D.

    (b) CONTRACTOR TO BE RESPONSIBLE FOR THE SELECTION, PURCHASE AND INSTALLATION INCLUDING LIFE SAFETY OF THIS PRODUCT, BASED ON THIS P.A.D., PROVIDED HE/SHE DOES NOT DEVIATE FROM THE CONDITIONS DETAILED ON THIS DOCUMENT. CONSTRUCTION SAFETY AT SITE IS THE CONTRACTOR'S RESPONSIBILITY.

    (c) THIS P.A.D. WILL BE CONSIDERED INVALID IF ALTERED BY ANY MEANS.

    (d) SITE SPECIFIC PROJECTS SHALL BE PREPARED BY A FLORIDA REGISTERED ENGINEER OR ARCHITECT WHICH WILL BECOME THE ENGINEER OF RECORD (E.O.R.) FOR THE PROJECT AND WHO WILL BE RESPONSIBLE FOR THE PROPER USE OF THE P.A.D. ENGINEER OF RECORD, ACTING AS A DELEGATED ENGINEER TO THE P.A.D. ENGINEER SHALL SUBMIT TO THIS LATTER THE SITE SPECIFIC DRAWINGS FOR REVIEW.

    (e) THIS P.A.D. SHALL BEAR THE DATE AND ORIGINAL SEAL AND SIGNATURE OF THE PROFESSIONAL ENGINEER OF RECORD THAT PREPARED IT.

TABLE OF CONTENTS

AREA 1: HV BLADES ①, ⑴A & ②

GENERAL NOTES		SHEET 1
SYSTEM COMPONENTS	1–20	SHEET 2
SYSTEM COMPONENTS	21–37	SHEET 3
TYPICAL SHUTTER ASSEMBLY	38–43	SHEET 4

AREA 2: HV BLADE ① AND HV WINDOW BLADE ⑴A (WHERE APPLICABLE)

TYPICAL SHUTTER ELEVATION & NOTES ON LOCKS	SHEET 5
INSTALLATION DETAILS A–E, CONCRETE/BLOCK	SHEET 6
INSTALLATION DETAILS F–L, CONCRETE/BLOCK	SHEET 7
CENTERMATE DETAILS HV	SHEET 8
CENTERMATE ALTERNATING DETAILS HV	SHEET 9
CENTERMATE DETAILS HD	SHEET 10
END CONNECTION DETAILS 1–6, CONCRETE/BLOCK	SHEET 11
MAXIMUM SPAN TABLES	SHEET 12
ANCHOR SCHEDULE– CONCRETE & BLOCK	SHEET 13
ANCHOR SCHEDULE– CONCRETE & BLOCK	SHEET 14
ANCHOR SCHEDULE– CONCRETE & BLOCK	SHEET 15
ANCHOR SCHEDULE– WOOD	SHEET 16
ANCHOR SCHEDULE– WOOD	SHEET 17
INSTALLATION DETAILS M–R, WOOD	SHEET 18
INSTALLATION DETAILS S–X, WOOD	SHEET 19
END CONNECTION DETAILS 7–12 & X, WOOD	SHEET 20

AREA 3: HV BLADE ② ONLY

TYPICAL SHUTTER ELEVATION & NOTES ON LOCKS	SHEET 21
INSTALLATION DETAILS AA–GG, CONCRETE	SHEET 22
CENTERMATE DETAILS HD	SHEET 23
END CONNECTION DETAILS 1–6 & X, CONCRETE/BLOCK	SHEET 24
MAXIMUM SPAN TABLES	SHEET 25
ANCHOR SCHEDULE, CONCRETE	SHEET 26

AREA 4: HV WINDOW BLADE ⑴A ONLY

TYPICAL WINDOW BLADE & WINDOW DETAIL	SHEET 27
TYPICAL SHUTTER ELEVATION	SHEET 28

AREA 5: HV WINDOW BLADE ① ONLY

INSTALLATION DETAILS, METAL STUD WALLS	SHEET 28A

FLORIDA BUILDING CODE (High Velocity Hurricane Zone)

PRODUCT REVISED
as complying with the Florida Building Code
Acceptance No 11-0325.02
Expiration Date 03/23/2016
By
Miami Dade Product Control

MIAMI–DADE COUNTY

WALTER A. TILLIT JR. LICENSE No. 44167 STATE OF FLORIDA PROFESSIONAL ENGINEER

P.E. SEAL/SIGNATURE/DATE

TILTECO INC.
TILLIT TESTING & ENGINEERING COMPANY
6355 N.W. 36th. St., Ste. 305, VIRGINIA GARDENS, FLORIDA 33166
Phone : (305)871–1530 . Fax : (305)871–1531
e–mail: tilteco@aol.com
EB–0006719
WALTER A. TILLIT Jr. P.E.
FLORIDA Lic. # 44167

PERFECT STORM SHUTTERS, INC.

(ASSA # 388)

12334 SW 131 AVE.
MIAMI, FL 33186
Phone:(305)256–8085, Fax:(305)256–8099

© 2011 EASTERN METAL SUPPLY, INC.

BERTHA HV™
Accordion Shutter System

REV.No	DESCRIPTION	DATE	DRAWN BY: M.C.V.
1	OLD DWG: 05–381	03/24/11	DATE: 03/24/11
2			DRAWING No
3			11–030
4			
5			SHEET
6			1 OF 28

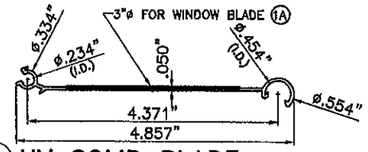

(1) HV SOLID BLADE
COVERED UNDER US PATENT # 5458179

(1A) HV WINDOW BLADE*
*SEE LIMITATIONS OF USE OF BLADE (1A) ON SHEET 28

6063-T6 ALLOY AND TEMPER

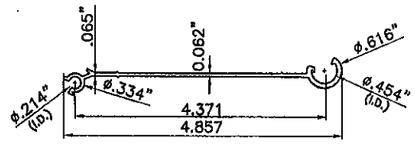

(2) HV BLADE
COVERED UNDER US PATENT # 5458179

6005-T5 ALLOY AND TEMPER

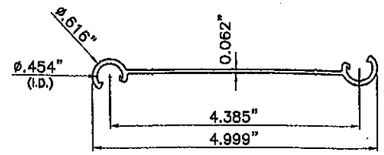

(3) HV UNIVERSAL FLOATER
QUALIFIED FOR USE W/ HV BLADE (1) & (2)

6005-T5 ALLOY AND TEMPER

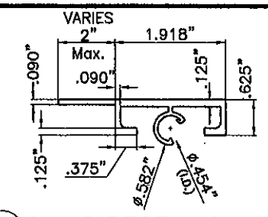

(4) HV DIRECT MOUNT
QUALIFIED FOR USE W/ HV BLADE (1), (1A) & (2)

6063-T6 ALLOY AND TEMPER

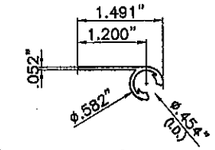

(5) HV 90°/180° STARTER
QUALIFIED FOR USE W/ HV BLADE (1), (1A) & (2)

6063-T6 ALLOY AND TEMPER

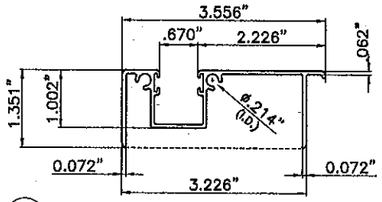

(6) HV ADJ. FLOOR TRACK
QUALIFIED FOR USE W/ HV BLADE (1), (1A) & (2)

6063-T6 ALLOY AND TEMPER

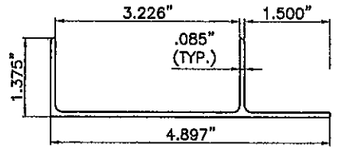

(7) HV ADJ. ADAPTER W/LIP
QUALIFIED FOR USE W/ HV BLADE (1), (1A) & (2)

6063-T6 ALLOY AND TEMPER

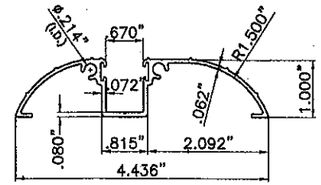

(8) HV WALK-OVER TRACK
QUALIFIED FOR USE W/ HV BLADE (1) & (2)

6063-T6 ALLOY AND TEMPER

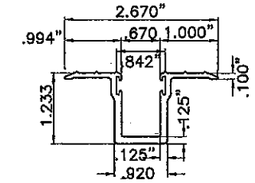

(9) HV TRENCH TRACK
QUALIFIED FOR USE W/ HV BLADE (2) ONLY.

6063-T6 ALLOY AND TEMPER

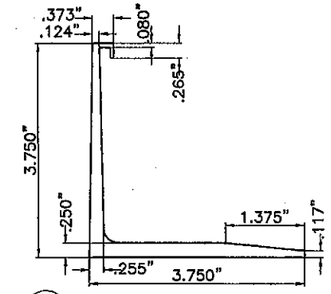

(10) HV RAINGUARD
QUALIFIED FOR USE W/ HV BLADE 1 & 2.

6063-T6 ALLOY AND TEMPER

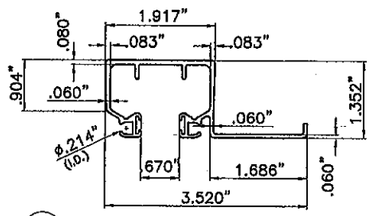

(11) HV CEILING HEADER
QUALIFIED FOR USE W/ HV BLADE (1) & (1A)

SEE SECTIONS FOR VALIDITY

6063-T6 ALLOY AND TEMPER

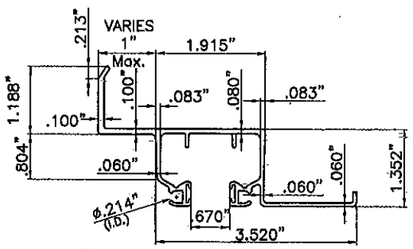

(12) HV HEADER/SILL
QUALIFIED FOR USE W/ HV BLADE (1) & (1A)

SEE SECTIONS FOR VALIDITY

6063-T6 ALLOY AND TEMPER

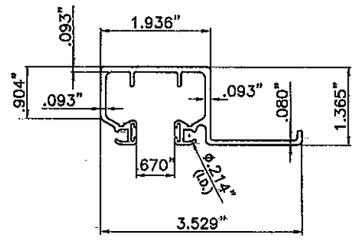

(13) HD CEILING HEADER/SILL
QUALIFIED FOR USE W/ HV BLADE (1) & (1A)

SEE SECTIONS FOR VALIDITY

6063-T6 ALLOY AND TEMPER

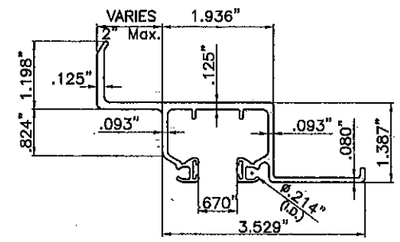

(14) HD WALL HEADER/SILL
QUALIFIED FOR USE W/ HV BLADE (1) & (1A)

SEE SECTIONS FOR VALIDITY

6063-T6 ALLOY AND TEMPER

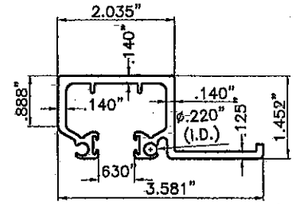

(15) SHD CEILING HEADER/SILL
QUALIFIED FOR USE W/ HV BLADE (1), (1A) & (2)

6063-T6 ALLOY AND TEMPER

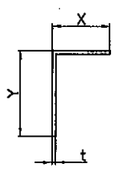

X	Y	t
1"	1"	0.062"
1"	2"	0.062"
2"	2"	0.062"
2"	3"	0.062"
2"	4"	0.062"
2"	5"	0.062"

(16) SIDE ANGLES
QUALIFIED FOR USE W/ HV BLADE (1), (1A) & (2)

6063-T6 ALLOY AND TEMPER

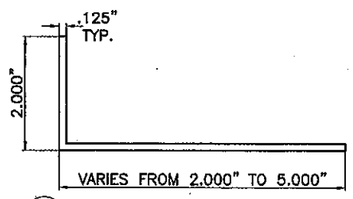

(17) B.O. WALL ANGLE
QUALIFIED FOR USE W/ HV BLADE (1) ONLY.

6063-T6 ALLOY AND TEMPER

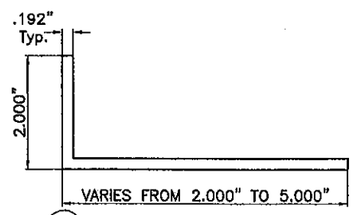

(18) B.O. WALL ANGLE
QUALIFIED FOR USE W/ HV BLADE (2)

6063-T6 ALLOY AND TEMPER

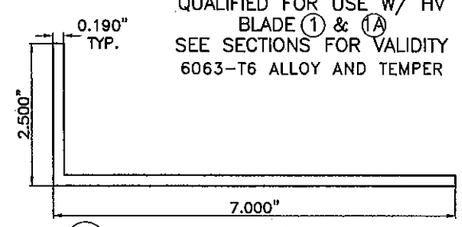

(19) 7" B.O. WALL ANGLE
QUALIFIED FOR USE W/ HV BLADE (1) ONLY.

6063-T6 ALLOY AND TEMPER

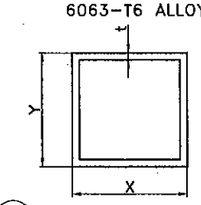

X	Y	t
2"	2"	0.125"
3"	3"	0.090"

(20) CORNER POSTS
QUALIFIED FOR USE W/ HV BLADE (1), (1A) & (2)

6063-T6 ALLOY AND TEMPER

FLORIDA BUILDING CODE (High Velocity Hurricane Zone)

PRODUCT REVISED
as complying with the Florida Building Code
Acceptance No 11-0325.02
Expiration Date 03/23/2016
By Helena A. Molina
Miami Dade Product Control

MIAMI-DADE COUNTY

WALTER A. TILLIT JR. LICENSE No. 44167 STATE OF FLORIDA PROFESSIONAL ENGINEER

P.E. SEAL/SIGNATURE/DATE

TILTECO INC.
TILLIT TESTING & ENGINEERING COMPANY
8355 N.W. 38th. St., Ste. 305, VIRGINIA GARDENS, FLORIDA 33166
Phone : (305)871-1530 . Fax : (305)871-1531
e-mail: tilteco@aol.com
EB-0006719
WALTER A. TILLIT Jr. P.E.
FLORIDA Lic. # 44167

PERFECT STORM SHUTTERS, INC.

(ASSA # 388)

12334 SW 131 AVE.
MIAMI, FL 33186
Phone:(305)256-8085, Fax:(305)256-8099

© 2011 EASTERN METAL SUPPLY, INC.

BERTHA HV™
Accordion Shutter System

REV.No	DESCRIPTION	DATE	DRAWN BY: M.C.V.
1	OLD DWG: 05-381	03/24/11	DATE: 03/24/11
2			DRAWING No
3			11-030
4			
5			SHEET
6			2 OF 28

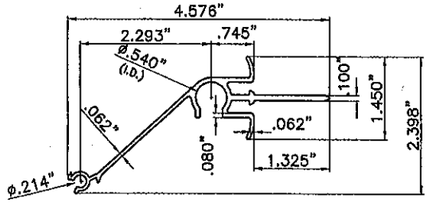

(21) HV CENTERMATE
QUALIFIED FOR USE W/ HV BLADE (1) & (1A) ONLY
6063-T6 ALLOY AND TEMPER

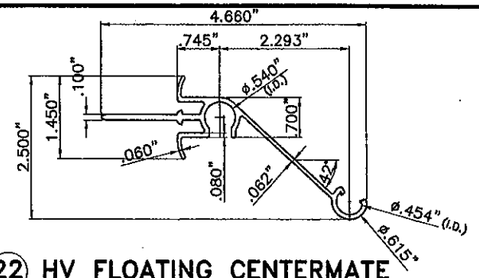

(22) HV FLOATING CENTERMATE
QUALIFIED FOR USE W/ HV BLADE (1) & (1A) ONLY
6063-T6 ALLOY AND TEMPER

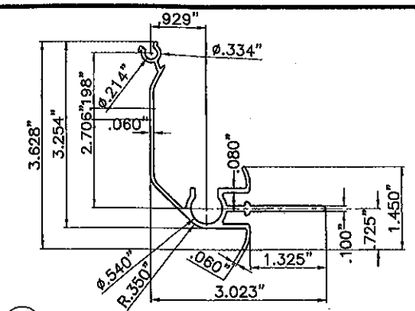

(23) HV CORNER CENTERMATE
QUALIFIED FOR USE W/ HV BLADE (1) ONLY
6063-T6 ALLOY AND TEMPER

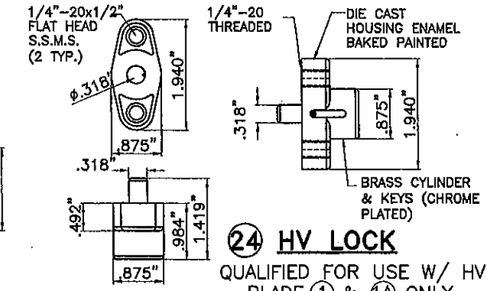

(24) HV LOCK
QUALIFIED FOR USE W/ HV BLADE (1) & (1A) ONLY.

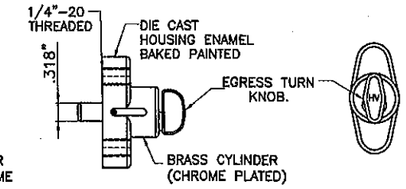

(25) HV EGRESS LOCK
QUALIFIED FOR USE W/ HV BLADE (1) & (1A) ONLY.

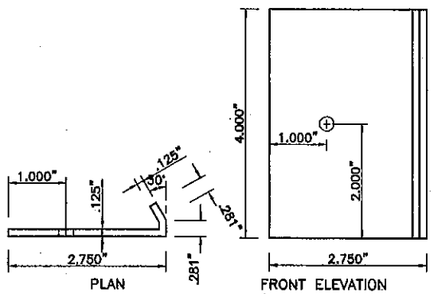

(27) LOCKER FOR "T" LOCK CENTERMATE
QUALIFIED FOR USE W/ HV BLADE (1) ONLY
6063-T6 ALLOY AND TEMPER

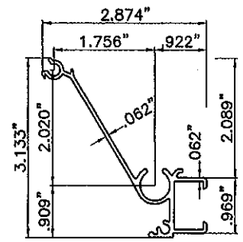

(28) HV MALE "T" LOCK CENTERMATE
QUALIFIED FOR USE W/ HV BLADE (1) ONLY
6063-T6 ALLOY AND TEMPER

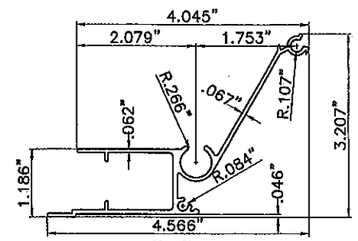

(29) HV FEMALE "T" LOCK CENTERMATE
QUALIFIED FOR USE W/ HV BLADE (1) ONLY
6063-T6 ALLOY AND TEMPER

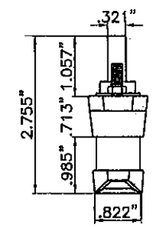

(30) HV "T" LOCK
QUALIFIED FOR USE W/HV BLADE (1) ONLY.

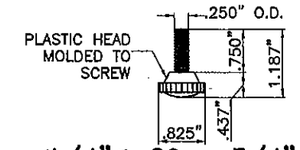

1/4"ø-20 x 3/4" S.S. THUMBSCREW

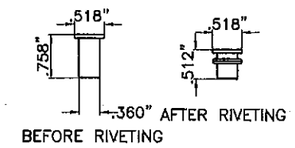

1/4"ø-20 RIVNUT*

*SERIES 9444 ALUMINUM (2024-T3 ALLOY) LARGE FLANGE THIN SHEET NUTSERT, PART # 0820, AS MANUFACTURED BY AVDEL CHERRY TEXTORN, PARSIPPENY, NEW JERSEY 07054 OR EQUAL.

(26) HV ALTERNATIVE LOCK
QUALIFIED FOR USE W/ HV BLADE (1) ONLY.

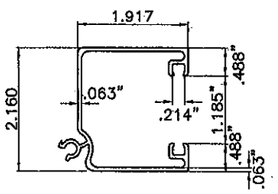

(31) HD CENTERMATE W/ NO LOCKING ROD
QUALIFIED FOR USE W/ HV BLADE (1) & (2)
6063-T6 ALLOY AND TEMPER

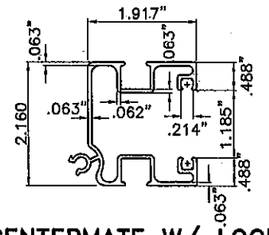

(32) HD CENTERMATE W/ LOCKING ROD
QUALIFIED FOR USE W/ HV BLADE (1) & (2)
6063-T6, ALLOY AND TEMPER

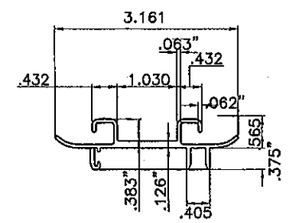

(33) HD CENTERMATE'S INSERT
QUALIFIED FOR USE W/ HV BLADE (1), (1A) & (2)
6063-T6 ALLOY AND TEMPER

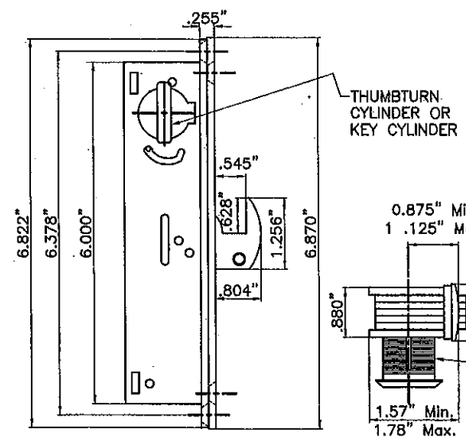

(34) HD LOCK
BY REGENT HARDWARE MORTISE LOCKS SERIES 2333 HOOK BOLT LOCK.
QUALIFIED FOR USE W/ HV BLADE (1) & (2)

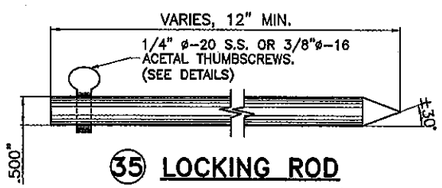

(35) LOCKING ROD
QUALIFIED FOR USE W/ HV BLADE (1), (1A) & (2)
6063-T6 ALLOY AND TEMPER

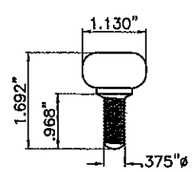

(36) HV 3/8"ø-16 ACETAL THUMBSCREWS
QUALIFIED FOR USE W/ HV BLADE (1) & (2)

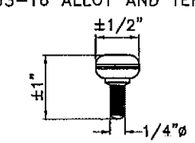

(37) HV 1/4" ø-20 AISI 304 SERIES S.S. THUMBSCREWS
QUALIFIED FOR USE W/ HV BLADE (1) & (2)

FLORIDA BUILDING CODE (High Velocity Hurricane Zone)

PRODUCT REVISED
as complying with the Florida Building Code
Acceptance No 11-0325.02
Expiration Date 03/23/2016
By Helena A. Molina
Miami Dade Product Control

MIAMI-DADE COUNTY

WALTER A. TILLIT JR. LICENSE No. 44167 STATE OF FLORIDA PROFESSIONAL ENGINEER
3/24/11
P.E. SEAL, SIGNATURE, DATE

TILTECO INC.
TILLIT TESTING & ENGINEERING COMPANY
8355 N.W. 36th. St., Ste. 305, VIRGINIA GARDENS, FLORIDA 33166
Phone : (305)871-1530 . Fax : (305)871-1531
e-mail: tilteco@aol.com
EB-0008719
WALTER A. TILLIT Jr. P.E.
FLORIDA Lic. # 44167

PERFECT STORM SHUTTERS, INC.

(ASSA # 388)

12334 SW 131 AVE.
MIAMI, FL 33186
Phone:(305)256-8085, Fax:(305)256-8099

© 2011 EASTERN METAL SUPPLY, INC.

BERTHA HV™
Accordion Shutter System

REV.No	DESCRIPTION	DATE	DRAWN BY: M.C.V.
1	OLD DWG: 05-381	03/24/11	DATE: 03/24/11
2			DRAWING No
3			11-030
4			
5			SHEET
6			3 OF 28

SHUTTER ASSEMBLY SCHEDULE FOR HV ①, HV ⑪ AND HV ② BLADES.

①	HV BLADE 1
⑪	HV BLADE 1A
②	HV BLADE 2
㊳	HV LONG RECESSED NYLON BUSHING
㊴	HV SHORT RECESSED NYLON BUSHING
㊵	HV NYLON HAT WASHER
㊶	HV WHEEL CARRIAGE AISI 302–303 SERIES Ø.870"x3/16" THICK NYLON WHEEL. 0.188"Ø AISI 302 SERIES S.S. RIVETS
㊷	HV 1 3/4" ACCORDION PIN W/ #8 HEAD *
㊸	HV 2 3/4" ACCORDION PIN W/ #8 HEAD *
㊹	POLYCARBONATE IMPACT RESISTANT HV WINDOW (SEE SHEET 27)

*** HV PIN REQUIREMENTS AT EXTERIOR BLADE KNUCKLE FOR HV ① HV ⑪ & HV ② BLADES.**

(1) HV PIN ㊸ SHALL ALWAYS BE USED AT ALL EXTERIOR BOTTOM KNUCKLES OF HV ACCORDION SYSTEM W/ HV ① OR HV ⑪ BLADE.

(2) HV PIN ㊷ MAY BE USED IN LIEU OF ㊸ AND ONLY AT EXTERIOR BOTTOM KNUCKLES OF HV ACCORDION SYSTEM W/ HV ② BLADE WHEN CORRESPONDING TO INSTALLATIONS "CC" AND "DD", SHEET 22.

(3) HV PIN ㊷ OR ㊸ W/ 1/2" O.D. 1/16" THICK S.S. WASHER SHALL BE USED FOR DIRECT MOUNT INSTALLATION PER DETAIL X, SHEETS 11 & 24.

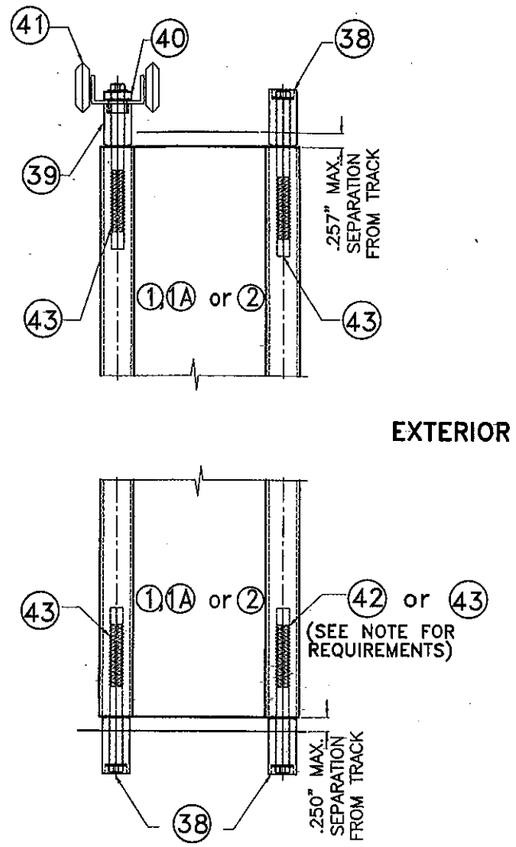

TYPICAL SHUTTER ASSEMBLY

SCALE: 3/8" = 1"

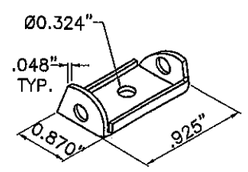

WHEEL CARRIAGE DETAIL

N.T.S.

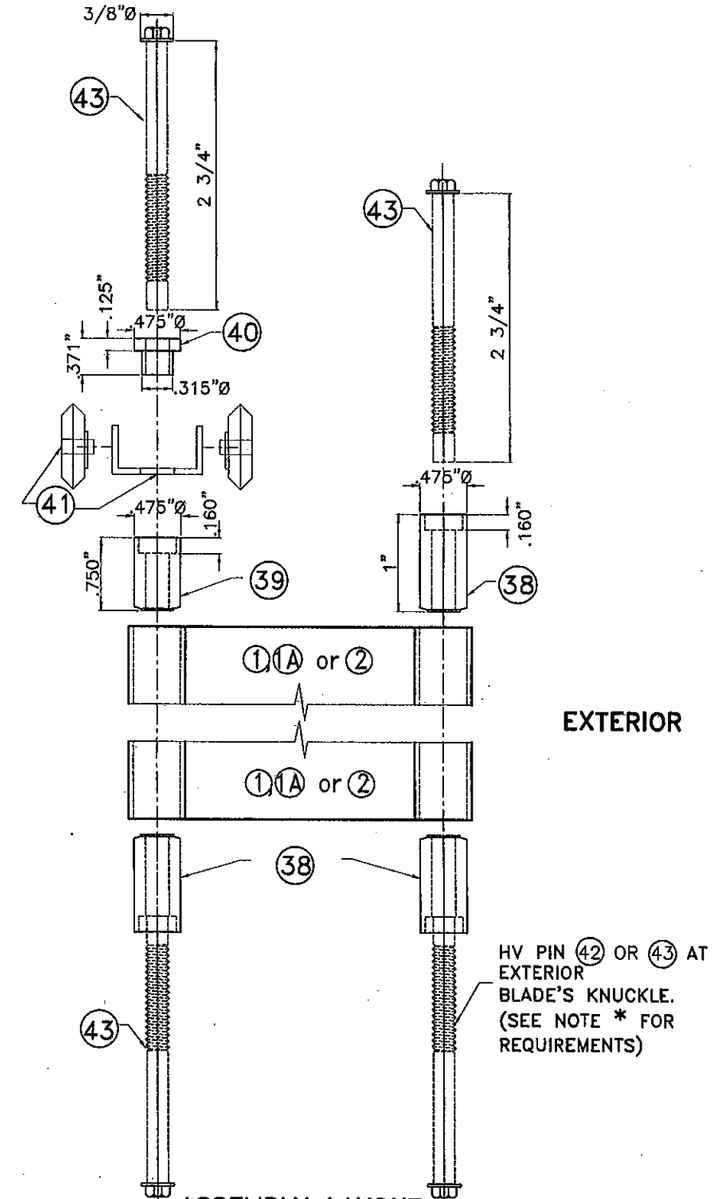

ASSEMBLY LAYOUT

N.T.S.

FLORIDA BUILDING CODE (High Velocity Hurricane Zone)

PRODUCT REVISED
as complying with the Florida Building Code
Acceptance No 11-0325.02
Expiration Date 03/23/2016
By Miami Dade Product Control

MIAMI–DADE COUNTY

WALTER A. TILLIT JR. LICENSE No. 44167 STATE OF FLORIDA PROFESSIONAL ENGINEER
P.E. SEAL, SIGNATURE, DATE

TILTECO INC.
TILLIT TESTING & ENGINEERING COMPANY
6355 N.W. 36th. St., Ste. 305, VIRGINIA GARDENS, FLORIDA 33166
Phone : (305)871–1530 . Fax : (305)871–1531
e-mail: tilteco@aol.com
EB-0006719
WALTER A. TILLIT Jr. P.E.
FLORIDA Lic. # 44167

PERFECT STORM SHUTTERS, INC.

(ASSA # 388)

12334 SW 131 AVE.
MIAMI, FL 33186
Phone:(305)256–8085, Fax:(305)256–8099

© 2011 EASTERN METAL SUPPLY, INC.

BERTHA HV™
Accordion Shutter System

REV.No	DESCRIPTION	DATE	DRAWN BY: M.C.V.
1	OLD DWG: 05–381	03/24/11	DATE: 03/24/11
2			DRAWING No
3			11–030
4			
5			SHEET
6			4 OF 28

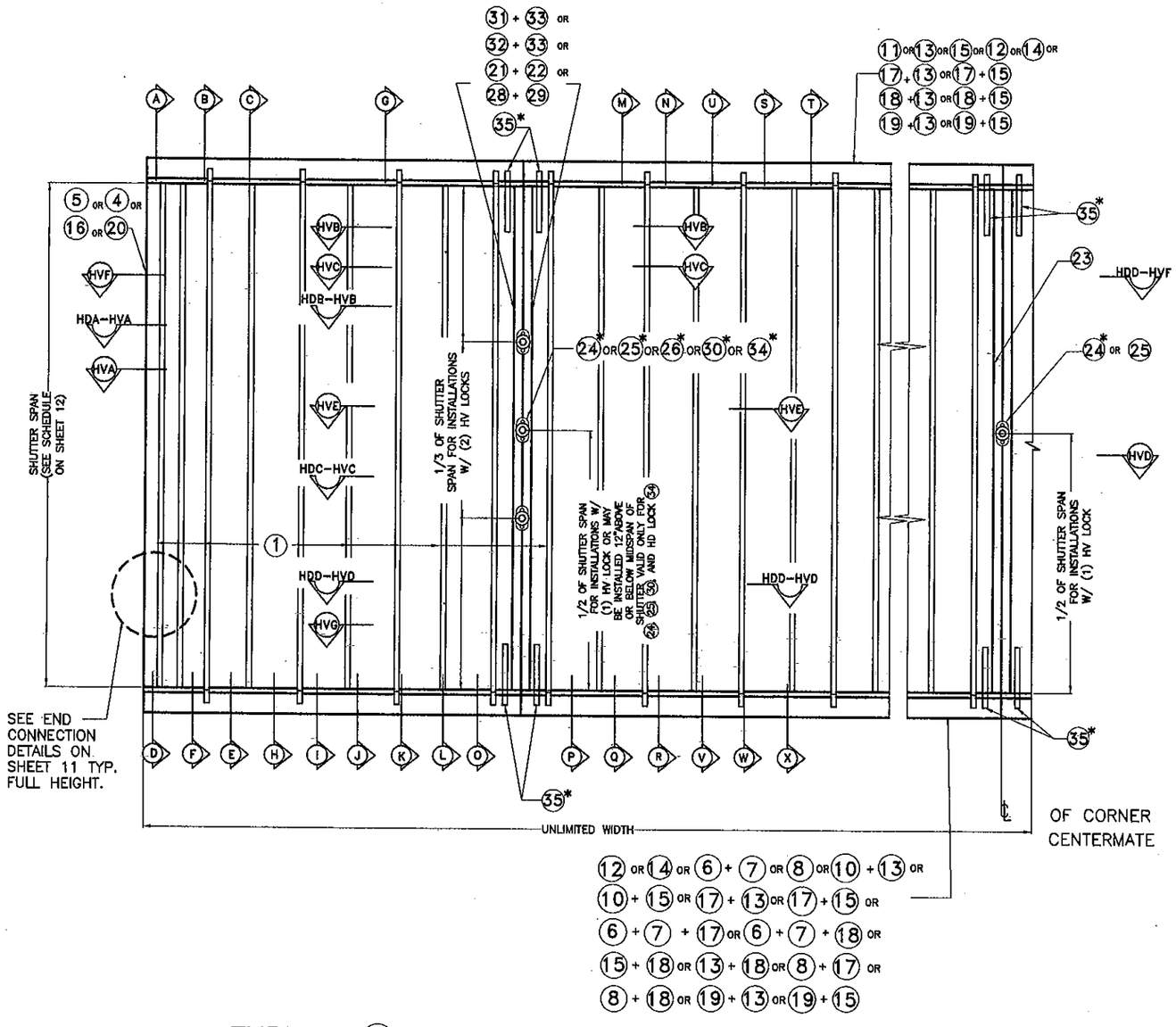

TYPICAL (1) HV BLADE SHUTTER ELEVATION

N.T.S.

* NOTES ON HV LOCKS AND CENTERMATES:

1. **MANDATORY CONDITION #1:** ONE HV LOCK (24) or (25) SHALL BE USED AT 1/2 OF SHUTTER SPAN FOR ANY SPAN OR 12" ABOVE OR BELOW 1/2 OF SHUTTER SPAN FOR SPANS UP TO 105", AND FOR INSTALLATIONS AT ANY ELEVATION. HV LOCK (24) or (25) MAY BE USED AS AN INSIDE OR OUTSIDE LOCK, ATTACHED TO (21) OR (22) CENTERMATES W/(2) 1/4"ø–20 x 1/2" LONG FLAT HEAD S.S. M.S. LOCATION OF LOCK SHALL BE AS INDICATED ON TYPICAL SHUTTER ELEVATION.

2. **LIMITED MANDATORY CONDITION #2 ALTERNATE TO MANDATORY CONDITION #1 (VALID ONLY FOR FLOOR/CEILING INSTALLATIONS.** TWO HV LOCKS (24) OR (25) OR ONE HV LOCK (24) OR (25) W/ TWO LOCKING RODS (35) AT TOP & BOTTOM SHALL BE USED FOR ANY SPAN AND INSTALLATION AT ANY ELEVATION. HV LOCK (24) OR (25) SHALL BE ATTACHED TO (21) OR (22) CENTERMATES W/ SAME SPECIFICATIONS AS PER MANDATORY CONDITION #1. LOCATION OF LOCK/LOCKS AS APPLICABLE SHALL BE AS INDICATED ON TYPICAL SHUTTER ELEVATION. MAXIMUM SHUTTER SPAN SHALL BE DETERMINED AS PER SCHEDULE #3 ON SHEET 12.

3. **OPTIONAL CONDITION #1:** IF DESIRED, FOR BETTER PERFORMANCE OR FOR SECURITY PURPOSES, UP TO TWO HV LOCKS (24) , (25) OR (26) MAY BE USED AS AN INSIDE OR OUTSIDE LOCK. CONNECTION OF LOCKS TO CENTERMATES (21) OR (22) SHALL BE AS INDICATED ON NOTE (1) ABOVE.
LOCATION OF LOCKS SHALL BE AS INDICATED ON TYPICAL SHUTTER ELEVATION.

4. **OPTIONAL CONDITION #2 (VALID ONLY WHEN MANDATORY CONDITION #1 OR LIMITED MANDATORY CONDITION #2 IS USED W/TWO H.V. LOCKS):** LOCKING RODS (35) ARE NOT REQUIRED AT HURRICANE POSITION, BUT MAY BE USED IF DESIRED TO ENHANCE SHUTTER PERFORMANCE. LOCKING RODS (35) OR AN ALTERNATIVE DEVICE MAY ALSO BE USED AT STACKING POSITION (NON HURRICANE POSITION).

5. **MANDATORY CONDITION #2:** ONE HV LOCK (24) or (25) SHALL BE USED AT CORNER CENTERMATES FOR ANY SPAN AND INSTALLATIONS AT ANY ELEVATION. HV LOCK (24) or (25) SHALL BE USED AS AN OUTSIDE OR INSIDE LOCK, ATTACHED TO (23) CORNER CENTERMATE W/(2) 1/4"ø–20 x 1/2" LONG FLAT HEAD S.S. M.S. TWO LOCKING RODS (35) AT TOP & BOTTOM SHALL BE USED. LOCATION OF LOCK SHALL BE AS INDICATED ON TYPICAL SHUTTER ELEVATION. MAXIMUM SHUTTER SPAN SHALL BE DETERMINED AS PER SCHEDULES SHOWN ON SHEET 12.

6. **FIRST ALTERNATE TO MANDATORY CONDITION #1 VALID ONLY FOR HV LOCK (26) W/ SYMMETRICAL CENTERMATES (21) OR (22) :** ONE ALTERNATE HV LOCK (26) MAY BE USED IN LIEU OF HV LOCK (24) or (25) FOR ANY SPAN AND INSTALLATIONS AT ANY ELEVATION. ALTERNATE LOCK (26) MAY BE USED AS AN INSIDE OR OUTSIDE LOCK. ATTACHMENT OF 1/4"ø–20x3/4" S.S. THUMBSCREW TO (21) OR (22) CENTERMATES SHALL BE MADE W/ 1/4"ø–20x3/4" ALUM. RIVNUT AS SHOWN ON SECTION HVE, SHEET 8. ONE LOCK SHALL BE USED AT 1/2 OF SHUTTER SPAN. OR TWO LOCKS AT 1/3 OF SHUTTER SPAN.

*NOTES ON HV "T" LOCKS AND CENTERMATES:

1. **SECOND ALTERNATE TO MANDATORY CONDITION #1 VALID ONLY FOR HV "T" LOCK (30) , AND CENTERMATES (28) AND (29) :** ONE ALTERNATE HV "T" LOCK (30) MAY BE INSTALLED IN LIEU OF HV LOCKS (24) OR (25) FOR ANY SPAN AND INSTALLATION AT ANY ELEVATION. ALTERNATE LOCK (30) MAY BE USED AS AN INSIDE OR OUTSIDE LOCK. ATTACHMENT OF LOCK (30) INCLUDES USING REINFORCING LOCKER (27) , AS SHOWN ON SECTION HVG, SHEET 9, WHICH MUST BE CONNECTED TO CENTERMATES (28) AND (29) W/ 1/4"ø–20 x 1 1/2" LONG S.S. THREADED BOLT W/ 7/8"ø x 3/32" WINGNUT OR W/ 1/4"ø–20x1" S.S.M.S. INTO A 1/4"øx 5/8" RIVNUT. LOCK MAY BE INSTALLED AT MIDSPAN OR 12" MAXIMUM ABOVE AND BELOW MIDSPAN. USE OF TWO LOCKING RODS (35) TOP AND BOTOM IS MANDATORY.

*NOTES ON HD LOCKS & CENTERMATES:

1. **HD LOCK (34) W/ HD CENTERMATES (31) OR (32) W/ (33)** : ONE ALTERNATE HD LOCK (34) MAYBE USED IN LIEU OF HV LOCKS (24) OR (25) FOR ANY SPAN AND INSTALLATIONS AT ANY ELEVATION. ALTERNATE HD LOCK (34) MAY BE USED AS AN INSIDE OR OUTSIDE LOCK. ATTACHMENT OF HD LOCK (34) TO (33) IS W/ 3 #8 x 3/8" F.H. S.S.M.S., AND INCLUDES REINFORCEMENT INSERT (33) AS SHOWN ON SECTIONS HDB–HVB AND HDC–HVC, SHEET 10. LOCK MAY BE INSTALLED AT MIDSPAN OR 12" MAXIMUM BELOW OR ABOVE MIDSPAN. USE OF LOCKING RODS (35) IS COMPLETELY OPTIONAL.

FLORIDA BUILDING CODE (**H**igh **V**elocity **H**urricane **Z**one)

PRODUCT REVISED
as complying with the Florida Building Code
Acceptance No 11-0325.02
Expiration Date 03/23/2016
By Helena A. Mahr
Miami Dade Product Control

MIAMI–DADE COUNTY

WALTER A. TILLIT JR. LICENSE No. 44167 STATE OF FLORIDA PROFESSIONAL ENGINEER
P.E. SEAL/SIGNATURE/DATE

TILTECO INC.
TILLIT TESTING & ENGINEERING COMPANY
6355 N.W. 36th. St., Ste. 305, VIRGINIA GARDENS, FLORIDA 33166
Phone : (305)871–1530 . Fax : (305)871–1531
e–mail: tilteco@aol.com
EB–0006719
WALTER A. TILLIT Jr. P.E.
FLORIDA Lic. # 44167

PERFECT STORM SHUTTERS, INC.

(ASSA # 388)

12334 SW 131 AVE.
MIAMI, FL 33186
Phone:(305)256–8085, Fax:(305)256–8099

© 2011 EASTERN METAL SUPPLY, INC.

BERTHA HV™
Accordion Shutter System

REV.No	DESCRIPTION	DATE	DRAWN BY: M.C.V.
1	OLO DWG: 05–381	03/24/11	DATE: 03/24/11
2			DRAWING No
3			11–030
4			
5			SHEET
6			5 OF 28

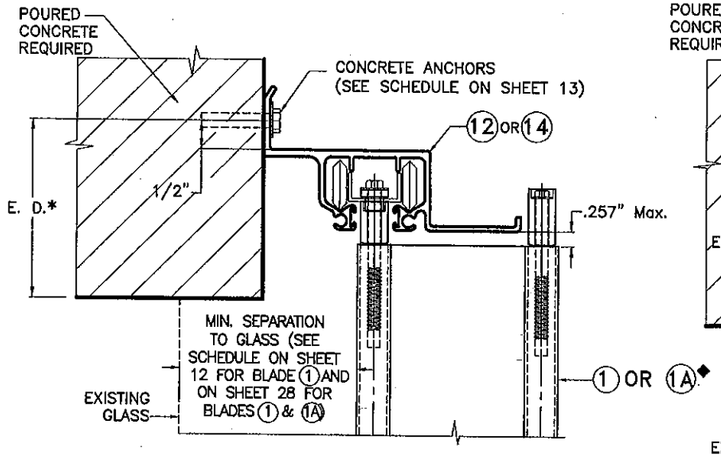

(A) HV WALL HEADER INSTALLATION

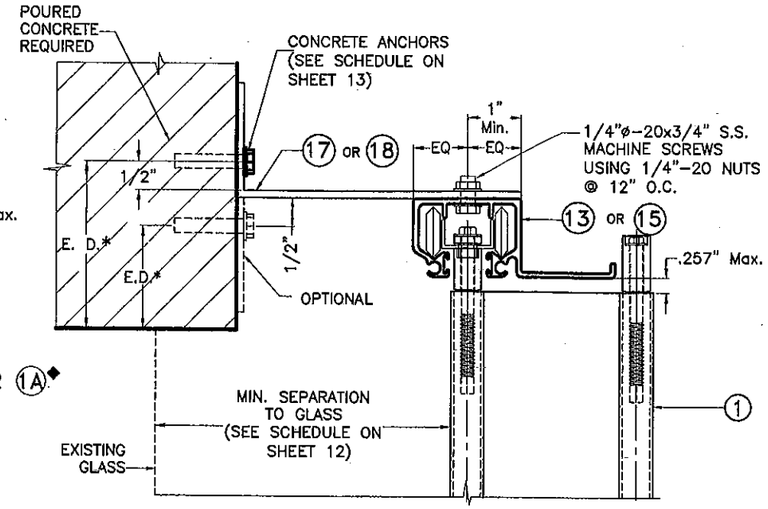

(B) HV WALL HEADER INSTALLATION

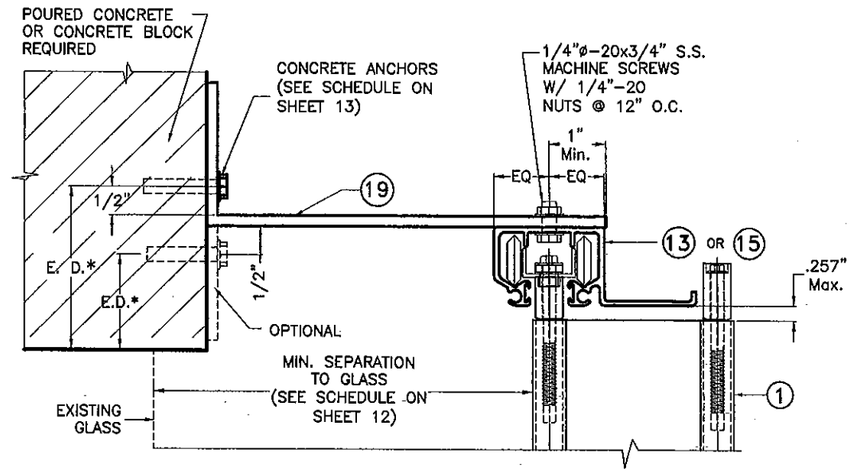

(C) HV WALL HEADER INSTALLATION

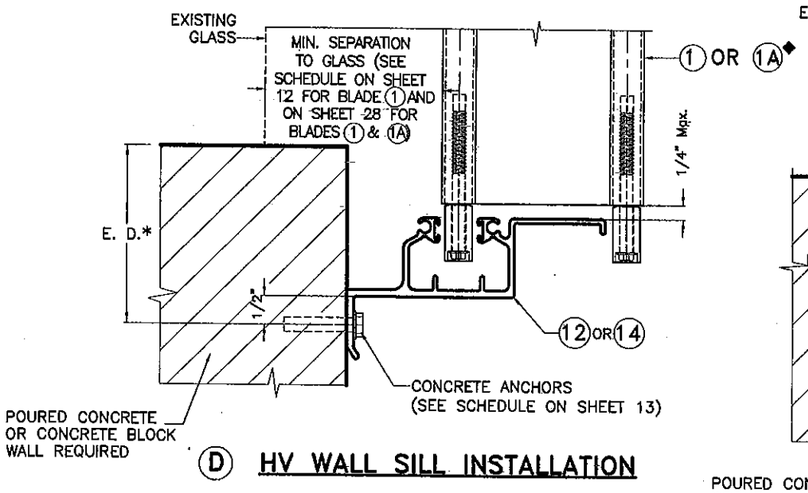

(D) HV WALL SILL INSTALLATION

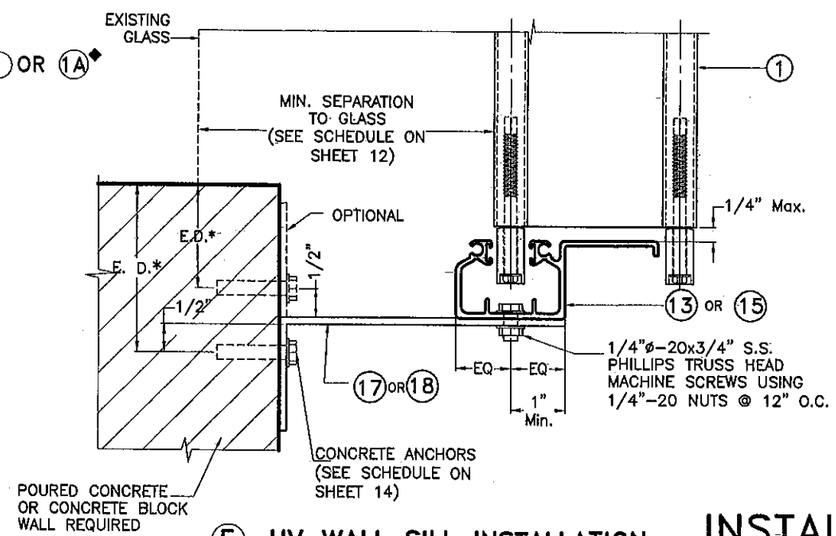

(E) HV WALL SILL INSTALLATION

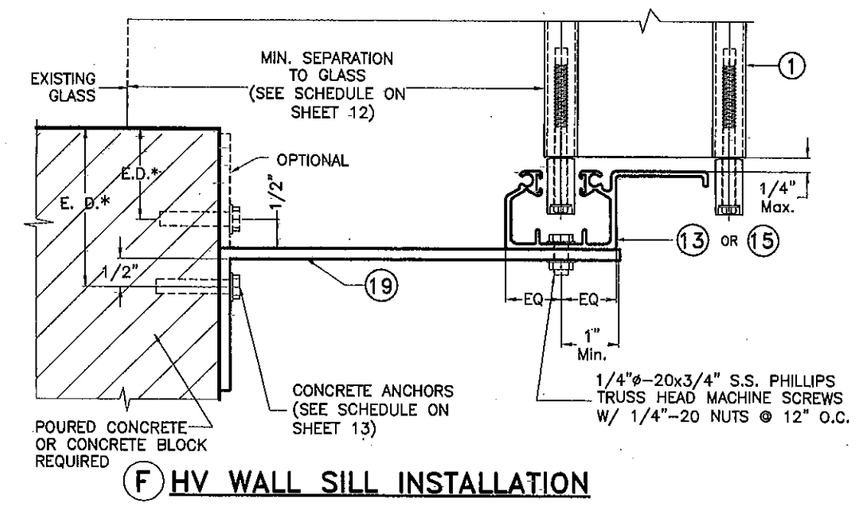

(F) HV WALL SILL INSTALLATION

INSTALLATION DETAILS W/ (1) HV BLADE & ((1) HV + (1A) HV BLADES) AS APPLICABLE

NOTE FOR COMBINATION OF SECTIONS:

1– SEE SHEET 4 FOR TYPICAL SHUTTER ASSEMBLY
2– MOUNTING SECTIONS CAN BE COMBINED IN ANY WAY TO SUIT ANY INSTALLATION.

* E. D. = EDGE DISTANCE (SEE SPECIFICATIONS ON SHEET 14)

◆ SEE LIMITATIONS OF USE FOR BLADE (1A) ON SHEET 28

FLORIDA BUILDING CODE (High Velocity Hurricane Zone)

PRODUCT REVISED
as complying with the Florida Building Code
Acceptance No 11-0325.02
Expiration Date 03/23/2016
By Helena A. Alvarez
Miami Dade Product Control

MIAMI–DADE COUNTY

WALTER A. TILLIT JR. LICENSE NO. 44167 STATE OF FLORIDA PROFESSIONAL ENGINEER

P.E. SEAL SIGNATURE DATE

TILTECO INC.
TILLIT TESTING & ENGINEERING COMPANY
6355 N.W. 36th. St., Ste. 305, VIRGINIA GARDENS, FLORIDA 33166
Phone : (305)871–1530 . Fax : (305)871–1531
e–mail: tilteco@aol.com
EB–0006719
WALTER A. TILLIT Jr. P.E.
FLORIDA Lic. # 44167

PERFECT STORM SHUTTERS, INC.

(ASSA # 388)

12334 SW 131 AVE.
MIAMI, FL 33186
Phone:(305)256–8085, Fax:(305)256–8099

© 2011 EASTERN METAL SUPPLY, INC.

BERTHA HV™
Accordion Shutter System

REV.No	DESCRIPTION	DATE	DRAWN BY: M.C.V.
1	OLD DWG: 05–381	03/24/11	DATE: 03/24/11
2			DRAWING No
3			11–030
4			
5			SHEET
6			6 OF 28

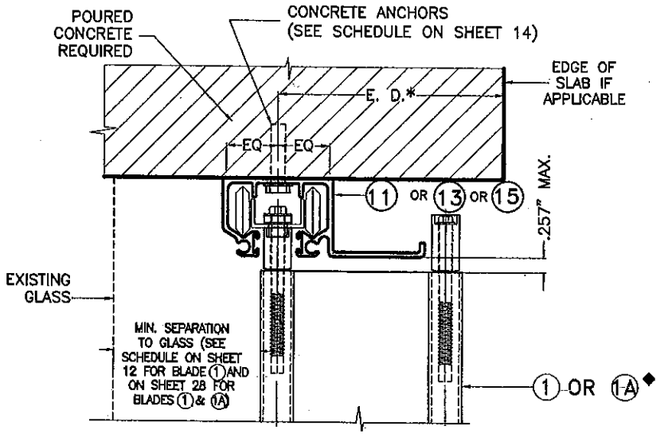

G HV CEILING INSTALLATION

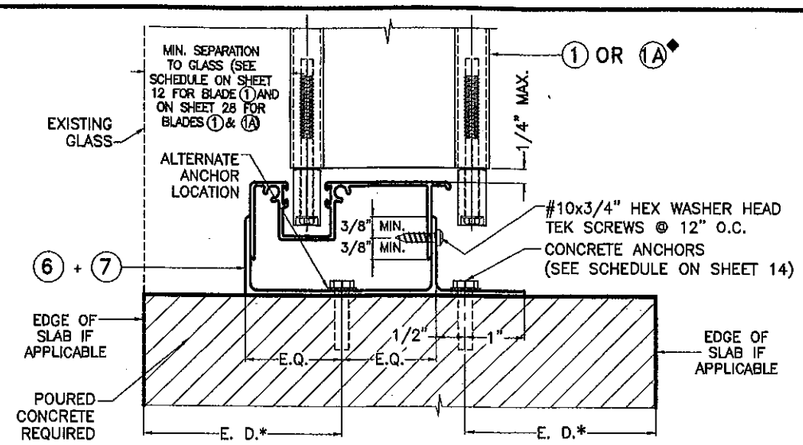

H HV FLOOR INSTALLATION †

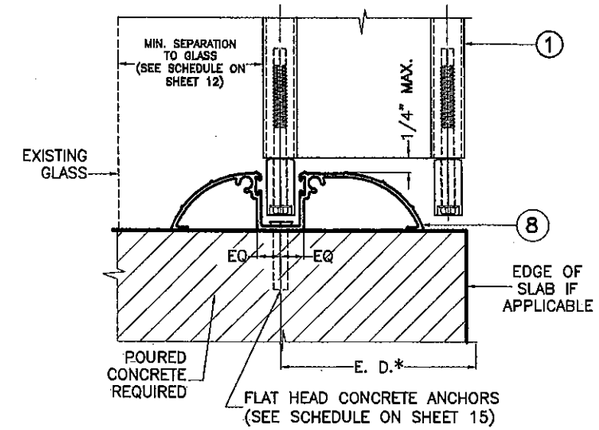

I HV WALK-OVER INSTALLATION

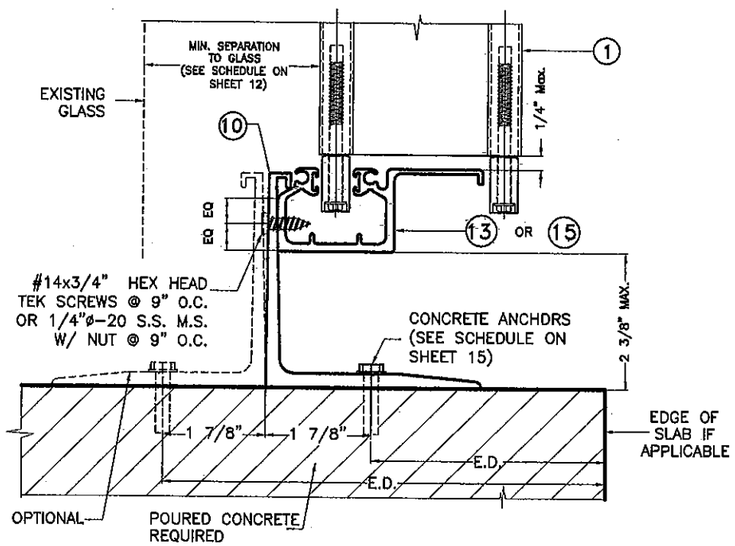

J HV RAINGUARD INSTALLATION †

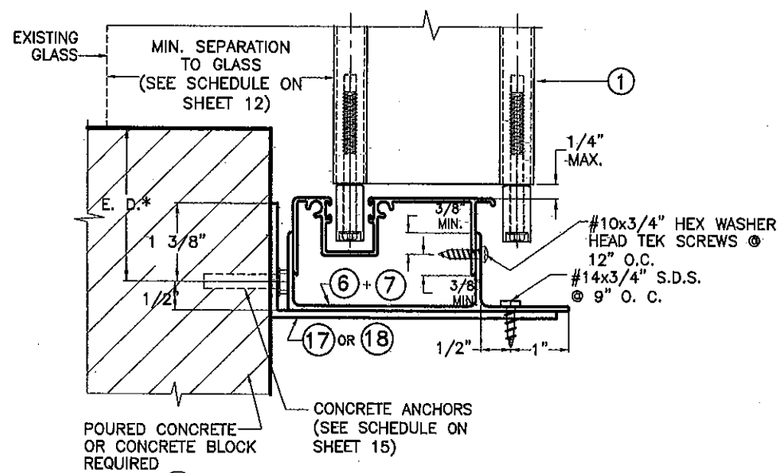

K HV WALL FLOOR INSTALLATION

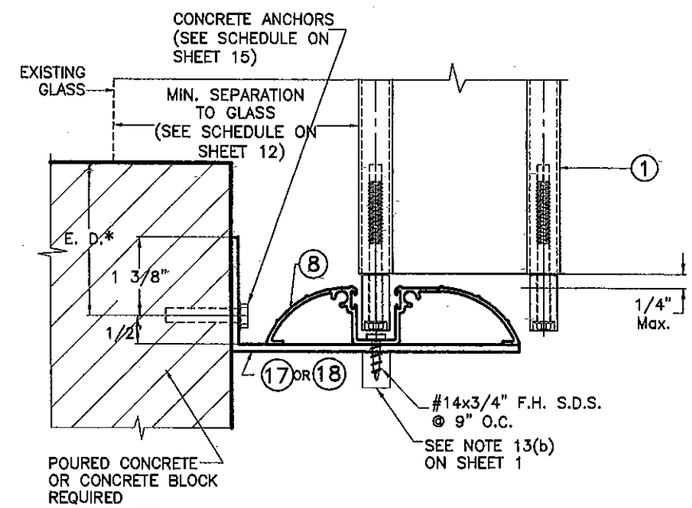

L HV WALL WALK-OVER INSTALLATION

INSTALLATION DETAILS W/ 1 HV BLADE & (1 HV + 1A HV BLADES) AS APPLICABLE

NOTE FOR COMBINATION OF SECTIONS:

1– SEE SHEET 4 FOR TYPICAL SHUTTER ASSEMBLY
2– MOUNTING SECTIONS CAN BE COMBINED IN ANY WAY TO SUIT ANY INSTALLATION.

* E. D. = EDGE DISTANCE (SEE SPECIFICATIONS ON SHEET 14)

NOTE:

† THIS INSTALLATION SHALL BE REMOVABLE WHEN PERFORMED ADJACENT TO AN OPERABLE EXIT OR ENTRANCE

◆ SEE LIMITATIONS OF USE FOR BLADE 1A ON SHEET 28

FLORIDA BUILDING CODE (High Velocity Hurricane Zone)

PRODUCT REVISED
as complying with the Florida Building Code
Acceptance No 11-0325.02
Expiration Date 03/23/2016
By Miami Dade Product Control

MIAMI-DADE COUNTY

WALTER A. TILLIT JR. LICENSE No. 44167 STATE OF FLORIDA PROFESSIONAL ENGINEER

P.E. SEAL SIGNATURE DATE

TILTECO INC.

TILLIT TESTING & ENGINEERING COMPANY
6385 N.W. 36th. St., Ste. 305, VIRGINIA GARDENS, FLORIDA 33166
Phone : (305)871-1530 . Fax : (305)871-1531
e-mail: tilteco@aol.com
EB-0006719
WALTER A. TILLIT Jr. P.E.
FLORIDA Lic. # 44167

PERFECT STORM SHUTTERS, INC.

(ASSA # 388)

12334 SW 131 AVE.
MIAMI, FL 33186
Phone:(305)256-8085, Fax:(305)256-8099

© 2011 EASTERN METAL SUPPLY, INC.

BERTHA HV™
Accordion Shutter System

REV.No	DESCRIPTION	DATE	DRAWN BY: M.C.V.
1	OLD DWG: 05-381	03/24/11	DATE: 03/24/11
2			DRAWING No
3			11-030
4			
5			SHEET
6			7 OF 28

INSTALLATIONS W/ (1) HV BLADE W/ HV CENTERMATES (21), (22) OR (23)

* SEE NOTES ON LOCKING RODS (33), HV LOCKS (24) or (25) AND ALTERNATE HV LOCK (26) ON SHEET 5.

** BLADE SLACK DETAIL HVF IS VALID FOR ALL CENTERMATES APPLICATION WITH BLADE (1)

SEE END WALL CONNECTION DETAILS ON SHEETS 11 & 20

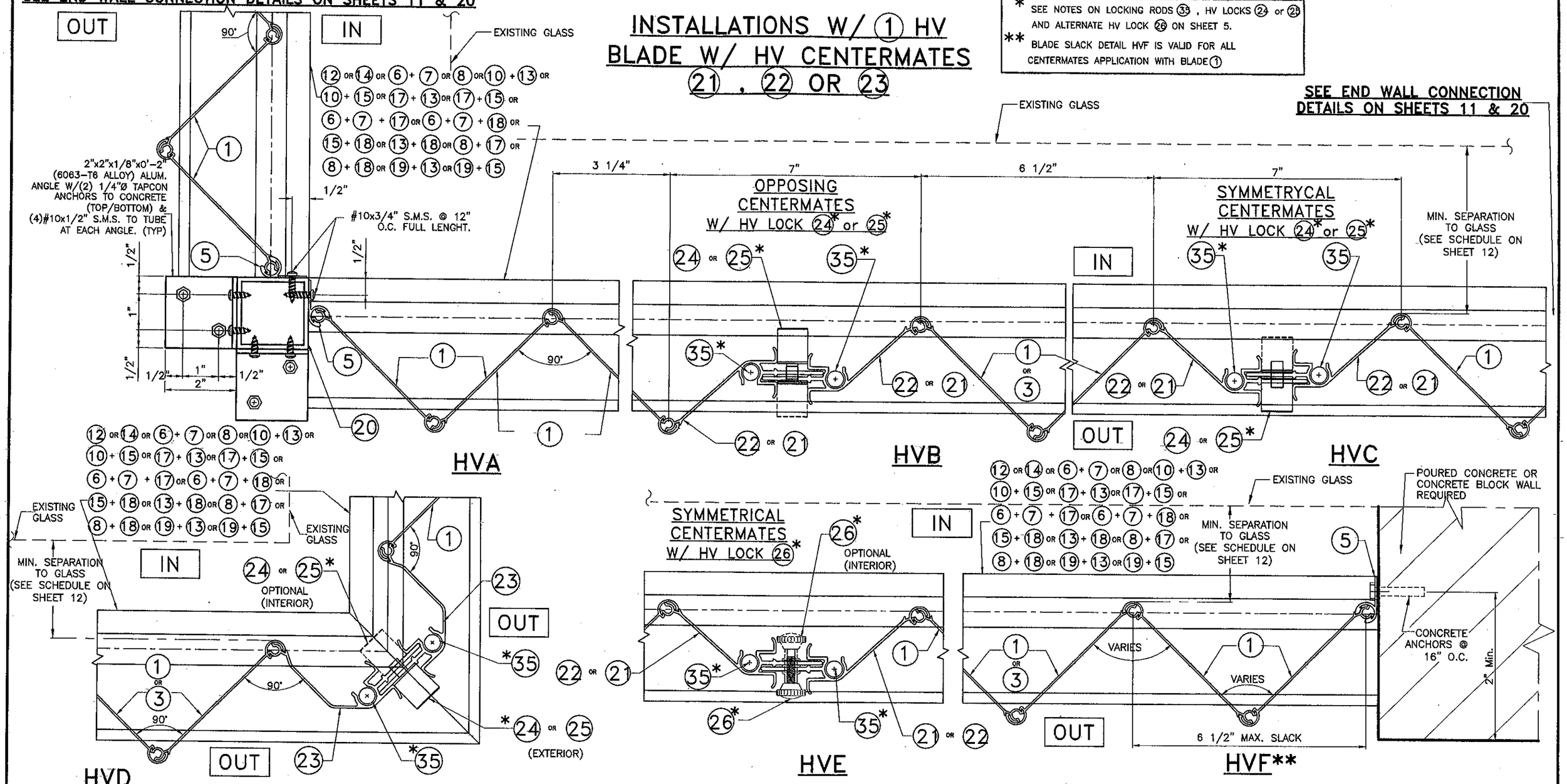

FLORIDA BUILDING CODE (High Velocity Hurricane Zone)

PRODUCT REVISED
as complying with the Florida Building Code
Acceptance No 11-0325.02
Expiration Date 03/23/2016
By Helena A. Alder
Miami Dade Product Control

MIAMI-DADE COUNTY

WALTER A. TILLIT JR. LICENSE No. 44167 STATE OF FLORIDA PROFESSIONAL ENGINEER

P.E. SEAL/SIGNATURE/DATE

TILTECO INC.
TILLIT TESTING & ENGINEERING COMPANY
8355 N.W. 36th. St., Ste. 305, VIRGINIA GARDENS, FLORIDA 33166
Phone : (305)871-1530 . Fax : (305)871-1531
e-mail: tilteco@aol.com
EB-0006719
WALTER A. TILLIT Jr. P.E.
FLORIDA Lic. # 44167

PERFECT STORM SHUTTERS, INC.
(ASSA # 388)
12334 SW 131 AVE.
MIAMI, FL 33186
Phone:(305)256-8085, Fax:(305)256-8099

© 2011 EASTERN METAL SUPPLY, INC.

BERTHA HV™
Accordion Shutter System

REV.No	DESCRIPTION	DATE
1	OLD DWG: 05-361	03/24/11
2		
3		
4		
5		
6		

DRAWN BY: M.C.V.
DATE: 03/24/11
DRAWING No 11-030
SHEET 8 OF 28

ALTERNATE INSTALLATION W/HV "T" LOCK (30), HV MALE/FEMALE "T" LOCKS CENTERMATES (28), (29) & LOCKERS (27) W/ (1) HV BLADE *

SEE END CONNECTION DETAILS ON SHEETS 11 & 20

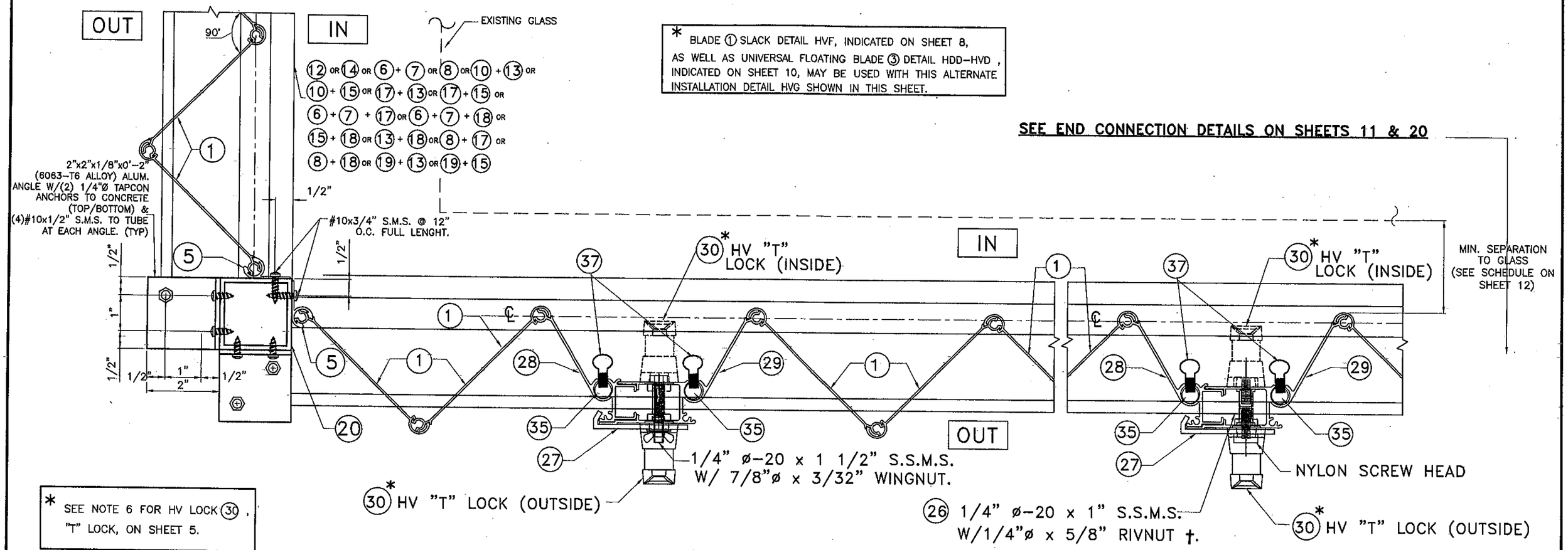

* BLADE (1) SLACK DETAIL HVF, INDICATED ON SHEET 8, AS WELL AS UNIVERSAL FLOATING BLADE (3) DETAIL HDD-HVD, INDICATED ON SHEET 10, MAY BE USED WITH THIS ALTERNATE INSTALLATION DETAIL HVG SHOWN IN THIS SHEET.

SEE END CONNECTION DETAILS ON SHEETS 11 & 20

* SEE NOTE 6 FOR HV LOCK (30), "T" LOCK, ON SHEET 5.

† SERIES 9444 ALUMINUM (2024-T3 ALLOY) LARGE FLANGE THIN SHEET NUTSERT, PART # 0820, AS MANUFACTURED BY AVDEL CHERRY TEXTORN, PARSIPPENY, NEW JERSEY 07054 OR EQUAL.

HVG*

FLORIDA BUILDING CODE (High Velocity Hurricane Zone)

PRODUCT REVISED
as complying with the Florida Building Code
Acceptance No 11-0325.02
Expiration Date 03/23/2016
By [signature]
Miami Dade Product Control

MIAMI-DADE COUNTY

WALTER A. TILLIT JR. LICENSE No. 44167 STATE OF FLORIDA PROFESSIONAL ENGINEER

P.E. SEAL/SIGNATURE/DATE

TILTECO INC.
TILLIT TESTING & ENGINEERING COMPANY
6355 N.W. 36th. St., Ste. 305, VIRGINIA GARDENS, FLORIDA 33166
Phone : (305)871-1530 . Fax : (305)871-1531
e-mail: tilteco@aol.com
EB-0006719
WALTER A. TILLIT Jr. P.E.
FLORIDA Lic. # 44167

PERFECT STORM SHUTTERS, INC.

(ASSA # 388)

12334 SW 131 AVE.
MIAMI, FL 33186
Phone:(305)256-8085, Fax:(305)256-8099

© 2011 EASTERN METAL SUPPLY, INC.

BERTHA HV™
Accordion Shutter System

REV.No	DESCRIPTION	DATE	DRAWN BY: M.C.V.
1	OLD DWG: 05-381	03/24/11	DATE: 03/24/11
2			DRAWING No
3			11-030
4			
5			SHEET
6			9 OF 28

SEE END WALL CONNECTION DETAILS ON SHEETS 11 & 20

INSTALLATION ① HV BLADE W/ HD CENTERMATES ㉛ , ㉜ , ㉝

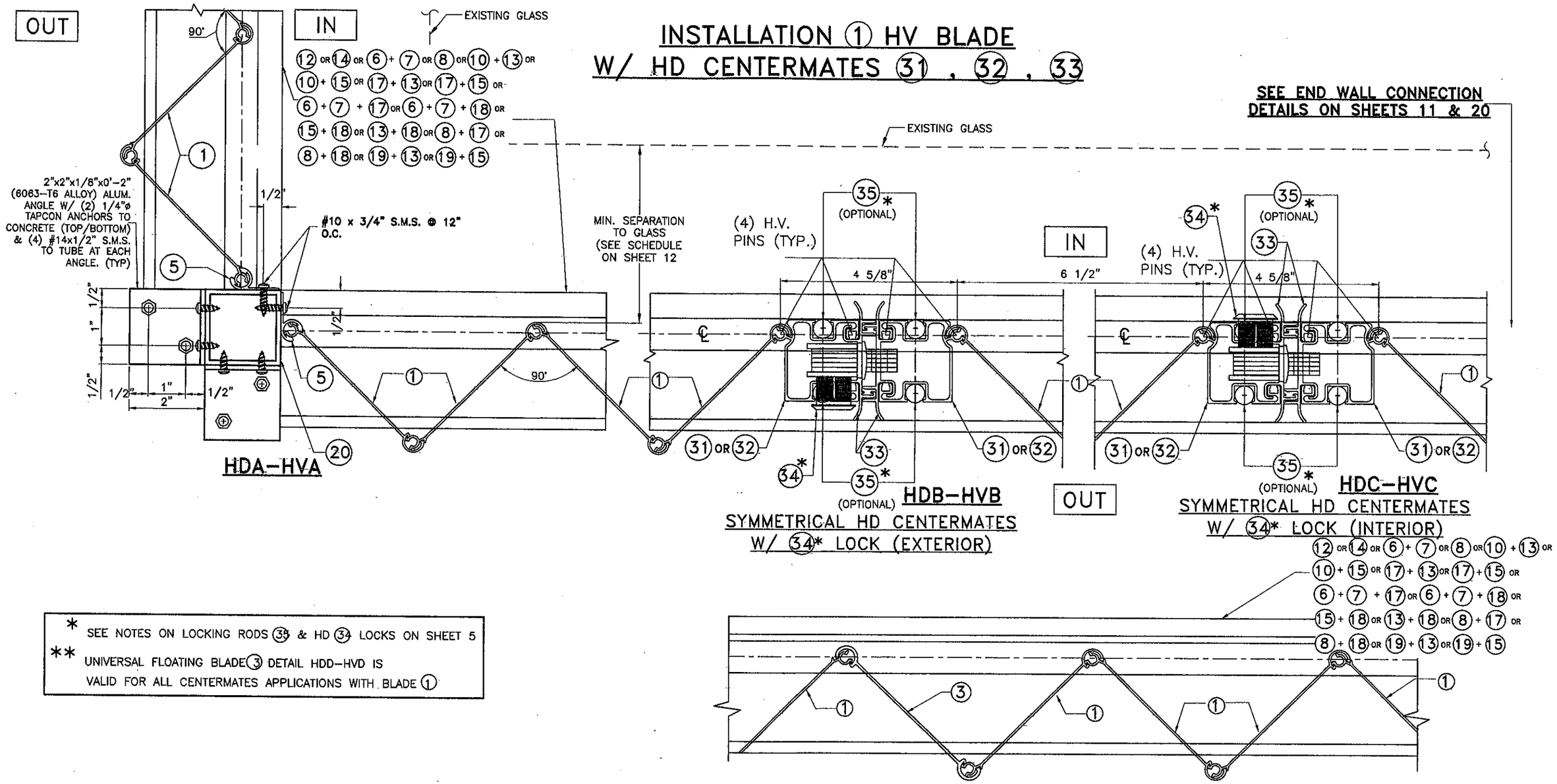

* SEE NOTES ON LOCKING RODS ㉟ & HD ㉞ LOCKS ON SHEET 5

** UNIVERSAL FLOATING BLADE ③ DETAIL HDD-HVD IS VALID FOR ALL CENTERMATES APPLICATIONS WITH BLADE ①

FLORIDA BUILDING CODE (High Velocity Hurricane Zone)

PRODUCT REVISED
as complying with the Florida Building Code
Acceptance No 11-0325.02
Expiration Date 03/23/2016
By Miami Dade Product Control

MIAMI-DADE COUNTY

WALTER A. TILLIT JR. LICENSE No. 44167 STATE OF FLORIDA PROFESSIONAL ENGINEER

P.E. SEAL/SIGNATURE/DATE

TILTECO INC.
TILLIT TESTING & ENGINEERING COMPANY
6355 N.W. 36th. St., Ste. 305, VIRGINIA GARDENS, FLORIDA 33166
Phone : (305)871-1530 . Fax : (305)871-1531
e-mail: tilteco@aol.com
EB-0008719
WALTER A. TILLIT Jr. P.E.
FLORIDA Lic. # 44167

PERFECT STORM SHUTTERS, INC.

(ASSA # 388)

12334 SW 131 AVE.
MIAMI, FL 33186
Phone:(305)256-8085, Fax:(305)256-8099

© 2011 EASTERN METAL SUPPLY, INC.

BERTHA HV™
Accordion Shutter System

REV.No	DESCRIPTION	DATE	DRAWN BY: M.C.V.
1	OLD DWG: 05-381	03/24/11	DATE: 03/24/11
2			DRAWING No
3			11-030
4			
5			SHEET
6			10 OF 28

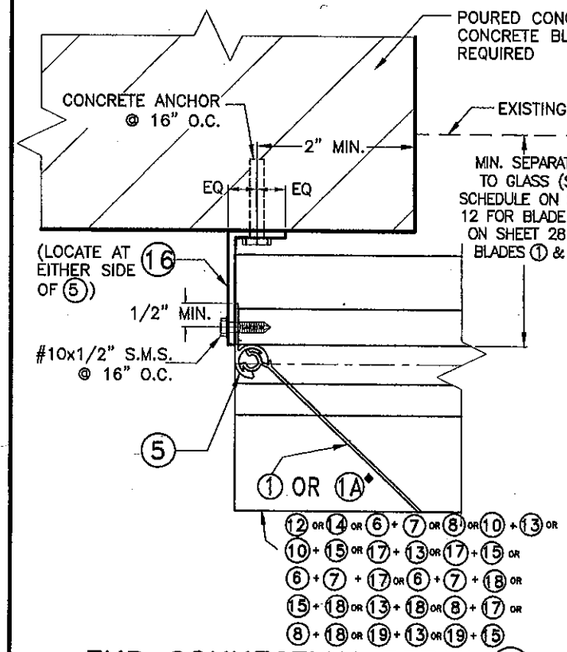

END CONNECTION DETAIL 1

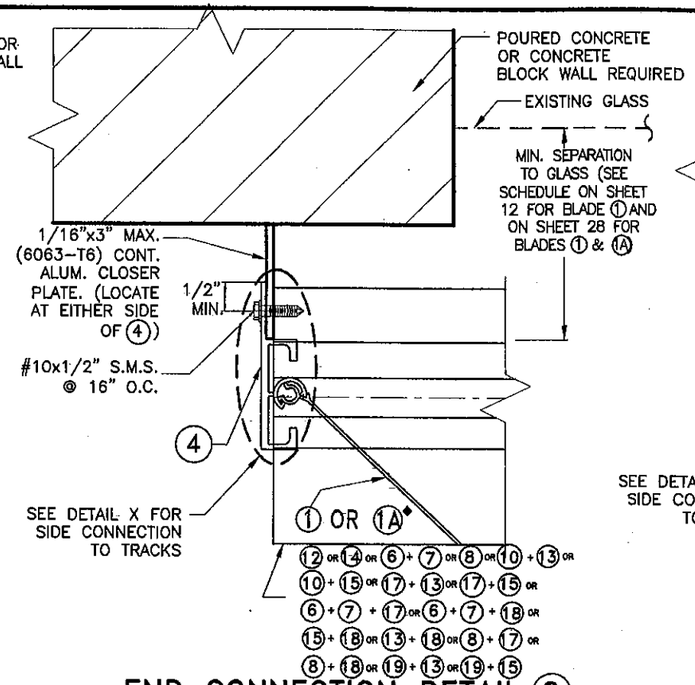

END CONNECTION DETAIL 2

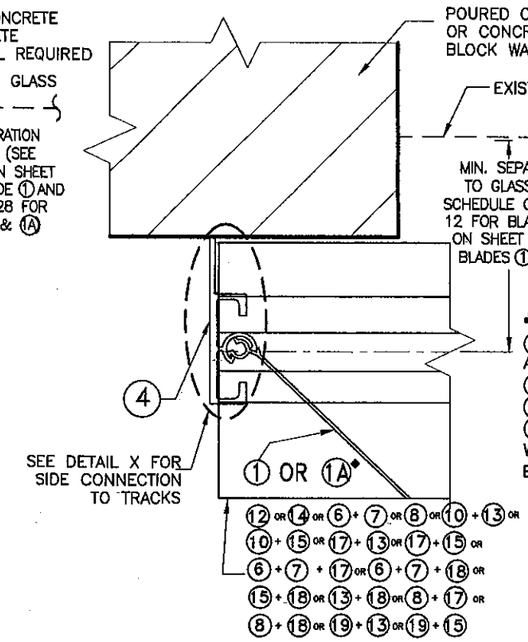

END CONNECTION DETAIL 3

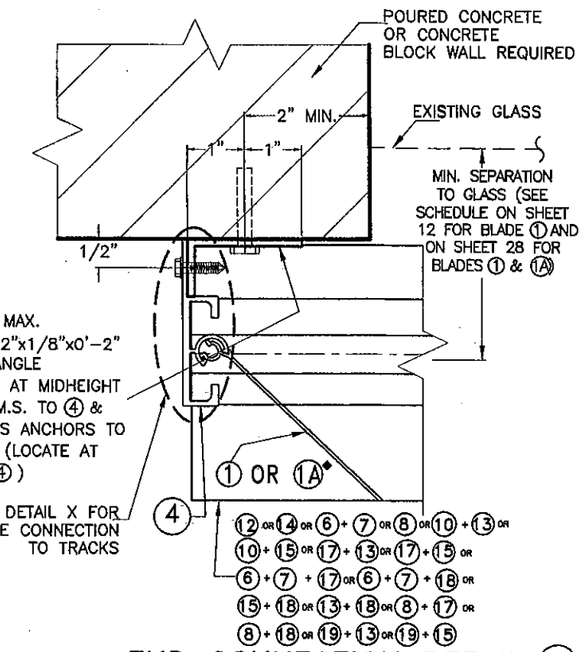

END CONNECTION DETAIL 4

♣ REQUIRED ONLY FOR SPANS GREATER THAN 12'-0"

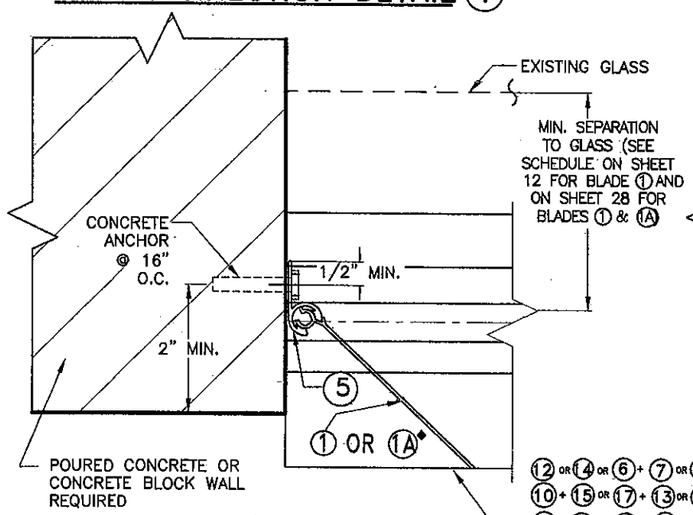

END CONNECTION DETAIL 5

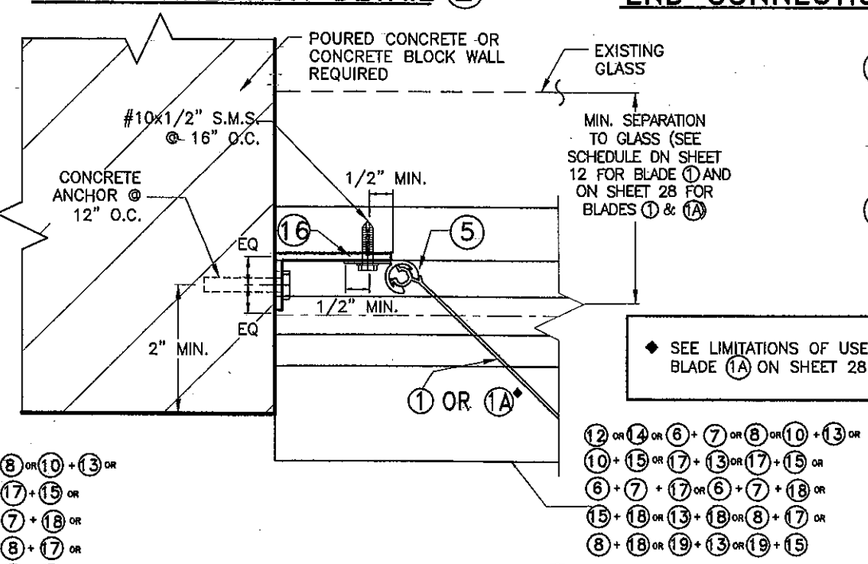

◆ SEE LIMITATIONS OF USE FOR BLADE 1A ON SHEET 28

END CONNECTION DETAIL 6

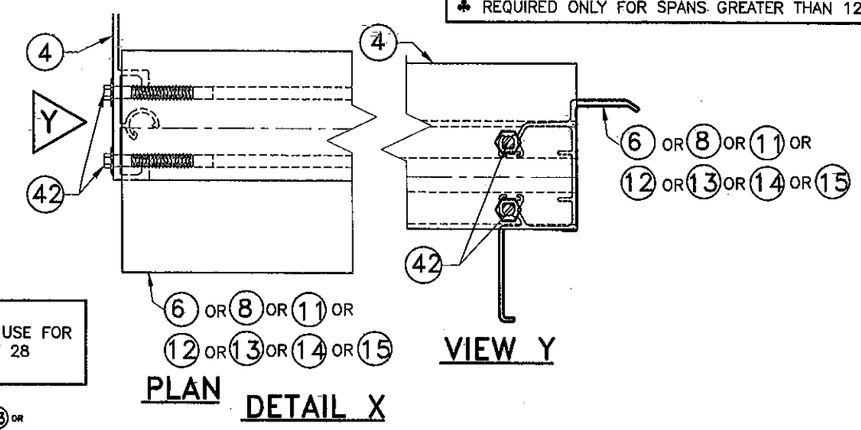

END INSTALLATION

1 HV BLADE OR 1A HV WINDOW BLADE INTO CONCRETE OR CONCRETE BLOCK WALL.

FLORIDA BUILDING CODE (High Velocity Hurricane Zone)

PRODUCT REVISED
as complying with the Florida Building Code
Acceptance No 11-0325.02
Expiration Date 03/23/2016
By Helen A. Weber
Miami Dade Product Control

MIAMI-DADE COUNTY

WALTER A. TILLIT JR. LICENSE No. 44167 STATE OF FLORIDA PROFESSIONAL ENGINEER

P.E. SEAL, SIGNATURE & DATE

TILTECO INC.

TILLIT TESTING & ENGINEERING COMPANY
6355 N.W. 36th. St., Ste. 305, VIRGINIA GARDENS, FLORIDA 33166
Phone : (305)871-1530 . Fax : (305)871-1531
e-mail: tilteco@aol.com
EB-0006719
WALTER A. TILLIT Jr. P.E.
FLORIDA Lic. # 44167

PERFECT STORM SHUTTERS, INC.

(ASSA # 388)

12334 SW 131 AVE.
MIAMI, FL 33186
Phone:(305)256-8085, Fax:(305)256-8099

© 2011 EASTERN METAL SUPPLY, INC.

BERTHA HV™
Accordion Shutter System

REV.No	DESCRIPTION	DATE	DRAWN BY: M.C.V.
1	OLD DWG: 05-381	03/24/11	DATE: 03/24/11
2			DRAWING No
3			11-030
4			
5			SHEET
6			11 OF 28

SCHEDULE #1

MAXIMUM SHUTTER SPAN* "L+" OR "L−" (ft.) FOR INSTALLATIONS W/ SYMMETRICAL CENTERMATES, 21 & 22 or 31 or 32 W/ ONE HV LOCK 24 or 25 or 26 or HD LOCK 34 W/ NO LOCKING RODS 35 OR CENTERMATES 28 & 29 W/ ONE HV LOCK 30 W/ TWO LOCKING RODS 35 TOP & BOTTOM ♦(SEE NOTE †)

MAXIMUM DESIGN LOAD (p.s.f.) (+ OR −)	CONCRETE & WOOD INSTALLATIONS ▲			
	WALL MOUNTING		FLOOR/CEILING MOUNTING	
	L + (ft)	L − (ft)	L + (ft)	L − (ft)
30	13'−2"	16'−0"	13'−2"	16'−0"
35	12'−8"	14'−10"	12'−8"	14'−10"
40	12'−3"	13'−10"	12'−3"	13'−10"
45	11'−11"	13'−1"	11'−11"	13'−1"
50	11'−7"	12'−5"	11'−7"	12'−5"
55	11'−4"	11'−10"	11'−4"	11'−10"
60	11'−1"	11'−4"	11'−0"	11'−4"
65	10'−10"	10'−10"	10'−7"	10'−10"
70	10'−6"	10'−6"	10'−2"	10'−6"
75	10'−1"	10'−1"	9'−10"	10'−1"
80	9'−10"	9'−9"	9'−7"	9'−10"
85	9'−6"	9'−6"	9'−3"	9'−6"
90	9'−3"	9'−3"	9'−0"	9'−3"
95	9'−0"	8'−9"	8'−9"	9'−0"
100	8'−9"	8'−4"	8'−6"	8'−9"
105	8'−7"	7'−11"	8'−4"	8'−4"
110	8'−4"	7'−7"	8'−2"	7'−11"
115	8'−2"	7'−3"	8'−0"	7'−7"
120	8'−0"	6'−11"	7'−10"	7'−4"
125	7'−10"	6'−8"	7'−8"	7'−0"
130	7'−8"	6'−5"	7'−6"	6'−9"
135	7'−7"	6'−2"	7'−4"	6'−6"
140	7'−5"	5'−11"	7'−3"	6'−3"
145	7'−3"	5'−9"	7'−1"	6'−0"
150	7'−2"	5'−7"	7'−0"	5'−10"
155	7'−0"	5'−5"	6'−10"	5'−8"
160	6'−11"	5'−2"	6'−9"	5'−6"
165	6'−10"	5'−1"	6'−8"	5'−4"
170	6'−9"	4'−11"	6'−7"	5'−2"
175	6'−7"	4'−9"	6'−5"	5'−0"
180	6'−6"	4'−8"	6'−4"	4'−10"
185	6'−5"	4'−6"	6'−3"	4'−9"
190	6'−4"	4'−5"	6'−2"	4'−7"
195	6'−3"	4'−3"	6'−1"	4'−6"
200	6'−2"	4'−2"	6'−0"	4'−5"
205	6'−0"	4'−1"	6'−0"	4'−3"

SCHEDULE #2

MAXIMUM SHUTTER SPAN* "L+" OR "L−" (ft.) FOR INSTALLATIONS W/ OPPOSING CENTERMATES, 21 & 22 ONE HV LOCK 24 OR 25 OR 26 W/ NO LOCKING RODS 35 ♦(SEE NOTE †)

MAXIMUM DESIGN LOAD (p.s.f.) (+ OR −)	CONCRETE & WOOD INSTALLATIONS ▲	
	WALL MOUNTINGS & FLOOR/CEILING MOUNTINGS	
	L + (ft)	L − (ft)
30	12'−3"	14'−9"
35	11'−9"	13'−8"
40	11'−4"	12'−9"
45	11'−1"	12'−0"
50	10'−9"	11'−5"
55	10'−6"	10'−11"
60	10'−3"	10'−5"
65	10'−0"	10'−0"
70	9'−8"	9'−8"
75	9'−4"	9'−4"
80	9'−0"	9'−0"
85	8'−9"	8'−9"
90	8'−6"	8'−6"
95	8'−3"	8'−3"
100	8'−1"	8'−1"
105	7'−11"	7'−11"
110	7'−8"	7'−7"
115	7'−6"	7'−3"
120	7'−4"	6'−11"
125	7'−3"	6'−8"
130	7'−1"	6'−5"
135	6'−11"	6'−2"
140	6'−10"	5'−11"
145	6'−8"	5'−9"
150	6'−7"	5'−7"
155	6'−6"	5'−5"
160	6'−5"	5'−2"
165	6'−3"	5'−1"
170	6'−2"	4'−11"
175	6'−1"	4'−9"
180	6'−0"	4'−8"
185	5'−11"	4'−6"
190	5'−10"	4'−5"
195	5'−9"	4'−3"
200	5'−9"	4'−2"
205	5'−8"	4'−1"

SCHEDULE #3

MAXIMUM SHUTTER SPAN* "L+" OR "L−" (ft.) INSTALLATIONS W/ SYMMETRICAL CENTERMATES, 21 & 22 W/ TWO HV 24 OR 25 OR 26 LOCKS OR TWO LOCKING RODS 35 TOP/BOTTOM W/ ONE HV LOCK 24 OR 25 OR 26♦ (SEE NOTE †)

MAXIMUM DESIGN LOAD (p.s.f.) (+ OR −)	CONCRETE & WOOD INSTALLATIONS ▲	
	FLOOR/CEILING MOUNTING	
	L + (ft)	L − (ft)
30	13'−1"	16'−0"
35	12'−7"	15'−7"
40	12'−2"	15'−2"
45	11'−9"	14'−3"
50	11'−6"	13'−7"
55	11'−3"	12'−11"
60	11'−0"	12'−4"
65	10'−9"	11'−11"
70	10'−7"	11'−5"
75	10'−4"	11'−1"
80	10'−0"	10'−9"
85	9'−9"	10'−5"
90	9'−5"	10'−1"
95	9'−2"	9'−10"
100	9'−0"	9'−7"
105	8'−9"	9'−4"
110	8'−7"	9'−2"
115	8'−4"	8'−11"
120	8'−2"	8'−9"
125	8'−0"	8'−5"
130	7'−10"	8'−1"
135	7'−9"	7'−9"
140	7'−7"	7'−6"
145	7'−5"	7'−3"
150	7'−4"	7'−0"
155	7'−2"	6'−9"
160	7'−1"	6'−7"
165	7'−0"	6'−4"
170	6'−11"	6'−2"
175	6'−9"	6'−0"
180	6'−8"	5'−10"
185	6'−7"	5'−8"
190	6'−6"	5'−6"
195	6'−5"	5'−5"
200	6'−4"	5'−3"
205	6'−3"	5'−1"

* NOTES:

(1) L+: MAXIMUM ALLOWABLE SPAN FOR A GIVEN POSITIVE DESIGN LOAD.
L−: MAX. ALLOWABLE SPAN FOR A GIVEN NEGATIVE DESIGN LOAD.

(2) PROCEDURE TO DETERMINE MAXIMUM SPAN FOR WALL MOUNTINGS OR FLOOR/CEILING:

GIVEN A POSITIVE DESIGN LOAD, DETERMINE MAXIMUM SPAN "L+" FROM SCHEOULE.
GIVEN A NEGATIVE DESIGN LOAD, DETERMINE MAXIMUM SPAN "L−" FROM SCHEDULE.

FINAL MAXIMUM ALLOWABLE SPAN IS EQUAL TO THE MINIMUM DETERMINED SPAN BETWEEN "L+" AND "L−".

(3) PROCEDURE TO DETERMINE MAXIMUM SPAN FOR COMBINATIONS IN BETWEEN WALL W/ FLOOR/CEILING MOUNTINGS:

FOR A GIVEN POSITIVE DESIGN LOAD:
DETERMINE:
L_{1+}= MAX. SPAN FOR WALL MOUNTING INSTALLATIONS.
L_{2+}= MAX. SPAN FOR FLOOR/CEILING MOUNTING INSTALLATIONS.

FOR A GIVEN NEGATIVE DESIGN LOAD:
DETERMINE:
L_{1-}= MAX. SPAN FOR WALL MOUNTING INSTALLATIONS.
L_{2-}= MAX. SPAN FOR FLOOR/CEILING MOUNTING INSTALLATIONS.

FINAL MAXIMUM ALLOWABLE SPAN IS EQUAL TO THE MINIMUM BETWEEN "L_{1+}", "L_{2+}", "L_{1-}" AND "L_{2-}"

(4) GO TO ANCHOR SCHEDULE WITH FINAL MAXIMUM ALLOWABLE SPAN AND NEGATIVE DESIGN LOAD TO DETERMINE MAXIMUM ANCHOR SPACING.

▲ MAXIMUM SHUTTER SPAN "L+" OR "L−" FOR INSTALLATIONS INTO WOOD SHALL BE LIMITED TO 105 psf. DESIGN LOAD.

† H.V. CORNER CENTERMATE #3 MAY BE USED AT ALL MOUNTING INSTALLATIONS. LOCKING SPECIFICATIONS SHALL BE AS INDICATED ON MANDATORY CONDITION #2 NOTE #5, SHEET 5.

♦ SEPARATION TO GLASS REQUIREMENTS

(1) SEE BELOW FOR MINIMUM SEPARATION TO GLASS SCHEDULE FOR SHUTTERS INSTALLED WITHIN THE FIRST 30'−0" ELEVATION OF BUILDING MEASURED AT BOTTOM OF SHUTTER.

(2) MINIMUM SEPARATION TO GLASS FOR SHUTTERS INSTALLED ABOVE 30'−0" ELEVATION OF BUILDING, MEASURED AT BOTTOM OF SHUTTER IS 3".

MINIMUM SEPARATION TO GLASS SCHEDULE:
SHUTTER W/ ONE LOCK WITHOUT LOCKING RODS

SHUTTER SPAN	INSTALLATION W/ SYMMETRICAL CENTERMATES	INSTALLATION W/ OPPOSING CENTERMATES
105" OR LESS	3 5/16"▲	4"
>105" TO MAX. ALLOWED	3 7/8"▲	4"

▲ USE 2 1/2" FOR HD LOCK 31+33 OR 32+33 , USE INDICATED VALUES FOR HV CENTERMATES.

MINIMUM SEPARATION TO GLASS SCHEDULE:
SHUTTER W/ ONE LOCK & TWO LOCKING RODS OR WITH ONLY TWO LOCKS

SHUTTER SPAN	INSTALLATION W/ SYMMETRICAL CENTERMATES	INSTALLATION W/ OPPOSING CENTERMATES
105" OR LESS	2 3/4" **	3 3/16"
>105" TO MAX. ALLOWED	3 1/4" ***	3 1/4"

** USE 2 15/16" FOR HV "T" LOCK 30 W/ 35
*** USE 4 1/8" FOR HV "T" LOCK 30 W/ 35
USE INDICATED VALUES FOR HV CENTERMATES.

INSTALLATION LEGEND

	CONCRETE & MANSORY	WOOD
WALL MOUNTING	A, B, C, D, E, F, K & L.	M, N, O, P, Q, R, S & V.
FLOOR/CEILING MOUNTING	G, H, I & J.	T, U, W & X.

① HV BLADE ONLY

FLORIDA BUILDING CODE (High Velocity Hurricane Zone)

PRODUCT REVISED
as complying with the Florida Building Code
Acceptance No 11-0325.02
Expiration Date 03/23/2016
By Helena A. Molina
Miami Dade Product Control

MIAMI−DADE COUNTY

WALTER A. TILLIT JR. LICENSE No 44167 STATE OF FLORIDA PROFESSIONAL ENGINEER
P.E. SEAL/SIGNATURE/DATE

TILTECO INC.
TILLIT TESTING & ENGINEERING COMPANY
6355 N.W. 36th. St., Ste. 305, VIRGINIA GARDENS, FLORIDA 33166
Phone : (305)871−1530 . Fax : (305)871−1531
e−mail: tilteco@aol.com
EB−0006719
WALTER A. TILLIT Jr. P.E.
FLORIDA Lic. # 44167

PERFECT STORM SHUTTERS, INC.

(ASSA # 388)

12334 SW 131 AVE.
MIAMI, FL 33186
Phone:(305)256−8085, Fax:(305)256−8099

© 2011 EASTERN METAL SUPPLY, INC.

BERTHA HV™
Accordion Shutter System

REV.No	DESCRIPTION	DATE
1	OLD DWG: 05−381	03/24/11
2		
3		
4		
5		
6		

DRAWN BY: M.C.V.
DATE: 03/24/11
DRAWING No 11−030
SHEET 12 OF 28

MAXIMUM ANCHOR* SPACING (in.) SCHEDULE FOR A GIVEN MAX. SHUTTER SPAN, DESIGN NEGATIVE LOAD AND A CORRESPONDING MOUNTING TYPE FOR CONCRETE OR CONCRETE BLOCK INSTALLATIONS

(SEE MOUNTINGS A, B, C, D AND F ON SHEET 6)

MAXIMUM SPAN (ft)	POURED CONCRETE																								POURED CONCRETE/CONCRETE BLOCK																							
	(A) WALL HEADER MOUNTING W/ (12)								(A) WALL HEADER MOUNTING W/ (14)								(B) WALL HEADER MOUNTING								(D) WALL SILL MOUNTING W/ (12)								(D) WALL SILL MOUNTING W/ (14)								(C) & (F) WALL HEADER/SILL MOUNTING							
	DESIGN NEGATIVE LOAD (psf)								DESIGN NEGATIVE LOAD (psf)								DESIGN NEGATIVE LOAD (psf)								DESIGN NEGATIVE LOAD (psf)								DESIGN NEGATIVE LOAD (psf)								DESIGN NEGATIVE LOAD (psf)							
	30	40	60	75	90	120	160	205	30	40	60	75	90	120	160	205	30	40	60	75	90	120	160	205	30	40	60	75	90	120	160	205	30	40	60	75	90	120	160	205	30	40	60	75	90	120	160	205
3'-0" OR LESS	14	12	10	9	8	8	6	6	14	12	10	9	8	8	6	6	14	12	10	9	8	8	6	6	14	12	10	9	8	8	6	–	14	12	10	9	8	8	6	5.5	8	8	8	8	8	8	7	5.5
	14	12	10	9	8	8	6	6	14	12	10	9	8	8	6	6	14	12	10	9	8	8	6	6	14	12	10	9	8	8	6	6	14	12	10	9	8	8	6	6	8	8	8	8	8	8	8	8
	14	12	10	9	8	6	6	5	14	12	10	9	8	8	6	6	14	12	10	9	8	8	6	6	14	12	10	9	8	8	6	3	14	12	10	9	8	8	6	6	8	8	8	8	8	8	6	6.5
	14	12	10	9	8	8	6	6	14	12	10	9	8	8	6	6	14	12	10	9	8	8	6	6	14	12	10	9	8	8	6	–	14	12	10	9	8	8	6	6	8	8	8	8	8	8	8	7
4'-0"	14	12	10	9	8	8	6	4	14	12	10	9	8	8	6	6	14	12	10	9	8	8	6	6	14	12	10	9	8	7	–	–	14	12	10	9	8	7	5.5	–	8	8	8	8	8	7	5.5	4
	14	12	10	9	8	8	6	4	14	12	10	9	8	8	6	6	14	12	10	9	8	8	6	6	14	12	10	9	8	8	5.5	–	14	12	10	9	8	8	6	6	8	8	8	8	8	8	8	8
	14	12	10	9	8	8	4.5	–	14	12	10	9	8	8	8	4	14	12	10	9	8	8	6	6	14	12	10	9	8	8	–	–	14	12	10	9	8	8	6	–	8	8	8	8	8	8	6.5	5
	14	12	10	9	8	8	6	4	14	12	10	9	8	8	6	6	14	12	10	9	8	8	6	6	14	12	10	9	8	8	–	–	14	12	10	9	8	8	6	–	8	8	8	8	8	8	7	5.5
5'-0"	14	12	10	9	8	8	4.5	–	14	12	10	9	8	8	6	3.5	14	12	10	9	8	8	6	6	14	12	10	9	7.5	–	–	–	14	12	10	9	7.5	5.5	–	–	8	8	8	8	7.5	5.5	4	3
	14	12	10	9	8	8	4.5	–	14	12	10	9	8	8	6	3.5	14	12	10	9	8	8	6	6	14	12	10	9	8	7	–	–	14	12	10	9	8	8	6	–	8	8	8	8	8	8	8	8
	14	12	10	9	8	5.5	–	–	14	12	10	9	8	8	4.5	–	14	12	10	9	8	8	6	5	14	12	10	9	8	3	–	–	14	12	10	9	8	7	–	–	8	8	8	8	8	7	5	4
	14	12	10	9	8	8	4	–	14	12	10	9	8	8	6	3.5	14	12	10	9	8	8	6	6	14	12	10	9	8	–	–	–	14	12	10	9	8	7.5	–	–	8	8	8	8	8	7.5	5.5	4
6'-0"	14	12	10	9	8	5.5	3	–	14	12	10	9	8	8	4.5	–	14	12	10	9	8	8	6	6	14	12	9.5	7.5	4	–	–	–	14	12	9.5	7.5	6.5	3.5	–	–	8	8	8	7.5	6.5	4.5	3.5	–
	14	12	10	9	8	5.5	–	–	14	12	10	9	8	8	4.5	–	14	12	10	9	8	8	6	6	14	12	10	9	8	4	–	–	14	12	10	9	8	8	4	–	8	8	8	8	8	8	8	7.5
	14	12	10	9	8	3	–	–	14	12	10	9	8	8	–	–	14	12	10	9	8	8	5.5	3.5	14	12	10	9	4.5	–	–	–	14	12	10	9	7.5	4	–	–	8	8	8	8	7.5	5.5	4	3
	14	12	10	9	8	5	–	–	14	12	10	9	8	8	4	–	14	12	10	9	8	8	6	5.5	14	12	10	9	5	–	–	–	14	12	10	9	8	4.5	–	–	8	8	8	8	8	6	4.5	–
7'-0"	14	12	10	9	8	4	–	–	14	12	10	9	8	6.5	3	–	14	12	10	9	8	8	6	–	14	12	8	4.5	–	–	–	–	14	12	8	6.5	5.5	–	–	–	8	8	8	6.5	5.5	4	3	–
	14	12	10	9	8	4	–	–	14	12	10	9	8	6.5	3	–	14	12	10	9	8	8	6	–	14	12	10	9	6	–	–	–	14	12	10	9	8	7	–	–	8	8	8	8	8	8	7.5	6
	14	12	10	9	4.5	–	–	–	14	12	10	9	8	4	–	–	14	12	10	9	8	7	4	–	14	12	10	5.5	–	–	–	–	14	12	10	8	6.5	–	–	–	8	8	8	8	6.5	5	3.5	–
	14	12	10	9	7.5	3.75	–	–	14	12	10	9	8	6	–	–	14	12	10	9	8	8	6	–	14	12	10	6	–	–	–	–	14	12	10	8.5	7	–	–	–	8	8	8	8	7	5	4	–
8'-0"	14	12	10	9	5.5	3	–	–	14	12	10	9	8	4.5	–	–	14	12	10	9	8	8	–	–	14	11	7	–	–	–	–	–	14	11	7	5.5	3.5	–	–	–	8	8	7	5.5	4.5	3.5	–	–
	14	12	10	9	5.5	–	–	–	14	12	10	9	8	4.5	–	–	14	12	10	9	8	8	–	–	14	12	10	7	4	–	–	–	14	12	10	9	8	3	–	–	8	8	8	8	8	7.5	7	4
	14	12	10	5.5	3	–	–	–	14	12	10	9	8	–	–	–	14	12	10	9	8	5.5	–	–	14	12	8.5	3	–	–	–	–	14	12	8.5	7	4	–	–	–	8	8	8	7	5.5	4	3	–
	14	12	10	9	5	–	–	–	14	12	10	9	8	4	–	–	14	12	10	9	8	8	–	–	14	12	9.5	–	–	–	–	–	14	12	9.5	7.5	4.5	–	–	–	8	8	8	7.5	6	4.5	–	–
	14	12	10	6.5	4.5	–	–	–	14	12	10	9	7.5	–	–	–	14	12	10	9	8	–	–	–	13	9.5	4	–	–	–	–	–	13	9.5	6.5	5	–	–	–	–	8	8	6.5	5	4	3	–	–
9'-0"	14	12	10	6.5	4	–	–	–	14	12	10	9	7.5	–	–	–	14	12	10	9	8	–	–	–	14	12	10	5	–	–	–	–	14	12	10	9	5.5	–	–	–	8	8	8	8	8	6.5	6	3
	14	12	8.5	4	–	–	–	–	14	12	10	9	4.5	–	–	–	14	12	10	9	7.5	–	–	–	14	11.5	4.5	–	–	–	–	–	14	11.5	7.5	6	–	–	–	–	8	8	7.5	6	5	4	–	–
	14	12	10	6	4	–	–	–	14	12	10	9	7	–	–	–	14	12	10	9	8	–	–	–	14	12	5	–	–	–	–	–	14	12	8	6.5	–	–	–	–	8	8	8	6.5	5.5	4	–	–
	14	12	9.5	5	3.5	–	–	–	14	12	10	9	5.5	–	–	–	14	12	10	9	8	–	–	–	11.5	8.5	–	–	–	–	–	–	11.5	8.5	5.5	–	–	–	–	–	8	8	5.5	4.5	3.5	–	–	–
10'-0"	14	12	9.5	5	3.5	–	–	–	14	12	10	9	5.5	–	–	–	14	12	10	9	8	–	–	–	14	12	7	–	–	–	–	–	14	12	10	7.5	5	–	–	–	8	8	8	8	8	7.5	4.5	–
	14	12	5.5	3	–	–	–	–	14	12	10	6	3	–	–	–	14	12	10	9	6	–	–	–	14	10.5	3	–	–	–	–	–	14	10.5	7	3.5	–	–	–	–	8	8	7	5.5	4.5	3.5	–	–
	14	12	9	4.5	3	–	–	–	14	12	10	9	5	–	–	–	14	12	10	9	8	–	–	–	14	11	–	–	–	–	–	–	14	11	7.5	–	–	–	–	–	8	8	7.5	6	5	–	–	–
	14	12	7	–	–	–	–	–	14	12	10	–	–	–	–	–	14	12	10	–	–	–	–	–	10.5	8	–	–	–	–	–	–	10.5	8	5	–	–	–	–	–	8	8	5	4	3.5	–	–	–
11'-0"	14	12	7	–	–	–	–	–	14	12	10	–	–	–	–	–	14	12	10	–	–	–	–	–	14	12	5	–	–	–	–	–	14	12	10	–	–	–	–	–	8	8	8	8	8	7	3.5	–
	14	12	4	–	–	–	–	–	14	12	10	–	–	–	–	–	14	12	10	–	–	–	–	–	12.5	9.5	–	–	–	–	–	–	12.5	9.5	6	–	–	–	–	–	8	8	6	5	4	3	–	–
	14	12	6.5	–	–	–	–	–	14	12	10	–	–	–	–	–	14	12	10	–	–	–	–	–	13.5	10	–	–	–	–	–	–	14	10	7	–	–	–	–	–	8	8	7	5.5	4.5	–	–	–
	14	12	5.5	–	–	–	–	–	14	12	10	–	–	–	–	–	14	12	10	–	–	–	–	–	9.5	7	–	–	–	–	–	–	9.5	7	3.5	–	–	–	–	–	8	7	4.5	3.5	3	–	–	–
12'-0"	14	12	5.5	–	–	–	–	–	14	12	10	–	–	–	–	–	14	12	10	–	–	–	–	–	14	12	4	–	–	–	–	–	14	12	10	–	–	–	–	–	8	8	8	8	8	6	3	–
	14	12	3	–	–	–	–	–	14	12	8	–	–	–	–	–	14	12	10	–	–	–	–	–	11.5	8.5	–	–	–	–	–	–	11.5	8.5	4	–	–	–	–	–	8	8	5.5	4.5	4	–	–	–
	14	12	5	–	–	–	–	–	14	12	10	–	–	–	–	–	14	12	10	–	–	–	–	–	12.5	9.5	–	–	–	–	–	–	13.5	9.5	4.5	–	–	–	–	–	8	8	6	5	4	–	–	–
	14	12	–	–	–	–	–	–	14	12	–	–	–	–	–	–	14	12	–	–	–	–	–	–	9	4.5	–	–	–	–	–	–	9	6.5	–	–	–	–	–	–	8	6.5	4.5	3.5	3	–	–	–
13'-0"	14	12	–	–	–	–	–	–	14	12	–	–	–	–	–	–	14	12	–	–	–	–	–	–	14	12	–	–	–	–	–	–	14	12	–	–	–	–	–	–	8	8	8	8	8	4.5	–	–
	14	10	–	–	–	–	–	–	14	12	–	–	–	–	–	–	14	12	–	–	–	–	–	–	10.5	5.5	–	–	–	–	–	–	10.5	8	–	–	–	–	–	–	8	8	5	4	3.5	–	–	–
	14	12	–	–	–	–	–	–	14	12	–	–	–	–	–	–	14	12	–	–	–	–	–	–	11.5	6	–	–	–	–	–	–	11.5	8.5	–	–	–	–	–	–	8	8	5.5	4.5	–	–	–	–
	14	12	–	–	–	–	–	–	14	12	–	–	–	–	–	–	14	12	–	–	–	–	–	–	8	3	–	–	–	–	–	–	8	6	–	–	–	–	–	–	8	6	4	3	–	–	–	–
14'-0"	14	12	–	–	–	–	–	–	14	12	–	–	–	–	–	–	14	12	–	–	–	–	–	–	14	9	–	–	–	–	–	–	14	12	–	–	–	–	–	–	8	8	8	8	7.5	4	–	–
	14	7	–	–	–	–	–	–	14	12	–	–	–	–	–	–	14	12	–	–	–	–	–	–	10	4	–	–	–	–	–	–	10	7.5	–	–	–	–	–	–	8	7.5	5	4	3	–	–	–
	14	11.5	–	–	–	–	–	–	14	12	–	–	–	–	–	–	14	12	–	–	–	–	–	–	10.5	4	–	–	–	–	–	–	10.5	8	–	–	–	–	–	–	8	8	5	4	–	–	–	–
	14	–	–	–	–	–	–	–	14	–	–	–	–	–	–	–	14	–	–	–	–	–	–	–	7.5	–	–	–	–	–	–	–	7.5	–	–	–	–	–	–	–	7.5	5.5	3.5	3	–	–	–	–
15'-0"	14	–	–	–	–	–	–	–	14	–	–	–	–	–	–	–	14	–	–	–	–	–	–	–	14	–	–	–	–	–	–	–	14	–	–	–	–	–	–	–	8	8	8	7	7	3.5	–	–
	14	–	–	–	–	–	–	–	14	–	–	–	–	–	–	–	14	–	–	–	–	–	–	–	9	–	–	–	–	–	–	–	9	–	–	–	–	–	–	–	8	7	4.5	3.5	3	–	–	–
	14	–	–	–	–	–	–	–	14	–	–	–	–	–	–	–	14	–	–	–	–	–	–	–	10	–	–	–	–	–	–	–	10	–	–	–	–	–	–	–	8	7.5	5	4	–	–	–	–
	14	–	–	–	–	–	–	–	14	–	–	–	–	–	–	–	14	–	–	–	–	–	–	–	7	–	–	–	–	–	–	–	7	–	–	–	–	–	–	–	7	5.5	3.5	–	–	–	–	–
16'-0"	14	–	–	–	–	–	–	–	14	–	–	–	–	–	–	–	14	–	–	–	–	–	–	–	14	–	–	–	–	–	–	–	14	–	–	–	–	–	–	–	8	8	8	7.5	6	3	–	–
	14	–	–	–	–	–	–	–	14	–	–	–	–	–	–	–	14	–	–	–	–	–	–	–	8	–	–	–	–	–	–	–	8	–	–	–	–	–	–	–	8	6.5	4	3.5	–	–	–	–
	14	–	–	–	–	–	–	–	14	–	–	–	–	–	–	–	14	–	–	–	–	–	–	–	9.5	–	–	–	–	–	–	–	9.5	–	–	–	–	–	–	–	8	7	4.5	–	–	–	–	–

ANCHORS SPACING LEGEND

TAPCON OR TAPCON WITH ADVANCED THREADFORM TECHNOLOGY
ALL POINTS SOLID-SET
BLUE TAP
TAPPER+

* SEE ANCHOR SPECIFICATIONS ON SHEET 14

◆ SEE LIMITATIONS OF USE FOR BLADE (1A) ON SHEET 28

(1) HV BLADE OR (1) HV BLADE W/ (1A) HV WINDOW BLADE WORKING IN UNISON ◆

FLORIDA BUILDING CODE (High Velocity Hurricane Zone)

PRODUCT REVISED
as complying with the Florida Building Code
Acceptance No 11-0325.02
Expiration Date 03/23/2016
By Helen A. Klein
Miami Dade Product Control

MIAMI-DADE COUNTY

WALTER A. TILLIT JR. LICENSE No. 44167 STATE OF FLORIDA PROFESSIONAL ENGINEER
3/24/11
P.E. SEAL/SIGNATURE/DATE

TILTECO INC.
TILLIT TESTING & ENGINEERING COMPANY
8355 N.W. 36th. St., Ste. 305, VIRGINIA GARDENS, FLORIDA 33166
Phone : (305)871-1530 . Fax : (305)871-1531
e-mail: tilteco@aol.com
EB-0006719
WALTER A. TILLIT Jr. P.E.
FLORIDA Lic. # 44167

PERFECT STORM SHUTTERS, INC.
(ASSA # 388)
12334 SW 131 AVE.
MIAMI, FL 33186
Phone:(305)256-8085, Fax:(305)256-8099

© 2011 EASTERN METAL SUPPLY, INC.

BERTHA HV™
Accordion Shutter System

REV.No	DESCRIPTION	DATE	DRAWN BY: M.C.V.
1	OLD DWG: 05-381	03/24/11	DATE: 03/24/11
2			DRAWING No 11-030
3			
4			
5			SHEET 13 OF 28
6			

MAXIMUM ANCHOR* SPACING (in.) SCHEDULE FOR A GIVEN MAX. SHUTTER SPAN, DESIGN NEGATIVE LOAD AND A CORRESPONDING MOUNTING TYPE FOR CONCRETE OR CONCRETE BLOCK INSTALLATIONS

(SEE MOUNTINGS E, G, & H ON SHEETS 6 & 7)

MAXIMUM SPAN (ft)	POURED CONCRETE/CONCRETE BLOCK								POURED CONCRETE															
	(E) WALL SILL MOUNTING								(G) CEILING MOUNTING								(H) FLOOR MOUNTING							
	DESIGN NEGATIVE LOAD (psf)								DESIGN NEGATIVE LOAD (psf)								DESIGN NEGATIVE LOAD (psf)							
	30	40	60	75	90	120	160	205	30	40	60	75	90	120	160	205	30	40	60	75	90	120	160	205
3'–0" OR LESS	14	12	10	9	8	8	6	5.5	14	12	10	9	8	8	6	6	14	12	10	9	8	8	6	6
	14	12	10	9	8	8	6	6	14	12	10	9	8	8	6	6	14	12	10	9	8	8	6	6
	14	12	10	9	8	8	6	6	14	12	10	9	8	8	6	6	14	12	10	9	8	8	6	5
	14	12	10	9	8	8	6	7	14	12	10	9	8	8	6	6	14	12	10	9	8	8	6	6
4'–0"	14	12	10	9	8	7	5.5	3.5	14	12	10	9	8	8	6	6	14	12	10	9	8	8	6	5
	14	12	10	9	8	8	6	6	14	12	10	9	8	8	6	6	14	12	10	9	8	8	6	5.5
	14	12	10	9	8	8	6	4	14	12	10	9	8	8	6	4.5	14	12	10	9	8	6	4	3.5
	14	12	10	9	8	8	6	4.5	14	12	10	9	8	8	6	5.5	14	12	10	9	8	8	6	4.5
5'–0"	14	12	10	9	7.5	5.5	3.5	–	14	12	10	9	8	8	6	5	14	12	10	9	8	7	5.5	4
	14	12	10	9	8	8	6	6	14	12	10	9	8	8	6	5.5	14	12	10	9	8	8	6	4.5
	14	12	10	9	8	7	4	–	14	12	10	9	8	6.5	5	3.5	14	12	10	8	6.5	5	3.5	3
	14	12	10	9	8	7.5	4.5	–	14	12	10	9	8	8	6	4.5	14	12	10	9	8	6	4.5	3.75
6'–0"	14	12	9.5	7.5	6.5	4.5	–	–	14	12	10	9	8	7.5	5.5	4	14	12	10	9	8	6	4.5	3.5
	14	12	10	9	8	8	6	–	14	12	10	9	8	8	6	5	14	12	10	9	8	6.5	5	3.5
	14	12	10	9	7.5	5.5	3	–	14	12	10	8.5	7	5.5	4	3	14	12	8	6.5	5.5	4	3	–
	14	12	10	9	8	6	–	–	14	12	10	9	8	6.5	5	3.75	14	12	10	8.5	8	5	4	–
7'–0"	14	12	8	6.5	5.5	3	–	–	14	12	10	9	8	6.5	4.5	3.5	14	12	10	8	7	5	3.5	3
	14	12	10	9	8	8	–	–	14	12	10	9	8	7	5	4	14	12	10	9	7.5	5.5	4	3
	14	12	10	8	6.5	4	–	–	14	12	9	7.5	6	4.5	3.5	–	14	10.5	7	5.5	4.5	3.5	–	–
	14	12	10	8.5	7	4	–	–	14	12	10	9	7.5	5.5	4	–	14	12	9	7	7.5	4.5	–	–
8'–0"	14	11	7	5.5	4.5	–	–	–	14	12	10	9	7.5	5.5	4	–	14	12	9	7	6	4.5	3	–
	14	12	10	9	8	6.5	–	–	14	12	10	9	8	6	4	–	14	12	10	8	6.5	5	3.5	–
	14	12	8.5	7	5.5	3	–	–	14	12	8	6.5	5.5	4	3	–	12.5	9.5	6	5	4	3	–	–
	14	12	9.5	7.5	6	–	–	–	14	12	9.5	8	6.5	5	–	–	14	12	8	6	6.5	4	–	–
9'–0"	13	9.5	6.5	5	3.5	–	–	–	14	12	10	8	6.5	5	–	–	14	12	8	6.5	5	4	–	–
	14	12	10	9	8	–	–	–	14	12	10	9	7.5	4.5	–	–	14	12	8.5	7	5.5	4	–	–
	14	11.5	7.5	6	4	–	–	–	14	11	7	5.5	5	3.5	–	–	11	8	5.5	4.5	3.5	–	–	–
	14	12	8	6.5	4.5	–	–	–	14	12	8.5	7	5.5	4	–	–	14	10.5	7	5.5	6	4.5	–	–
10'–0"	11.5	8.5	5.5	4	–	–	–	–	14	12	9	7	6	4.5	–	–	14	11	7	5.5	4.5	3.5	–	–
	14	12	10	9	7.5	–	–	–	14	12	10	8	6.5	5	–	–	14	12	8	6	5	4	–	–
	14	10.5	7	5	3.5	–	–	–	13	9.5	6.5	5	4	3	–	–	10	7.5	5	4	3	–	–	–
	14	11	7.5	5.5	–	–	–	–	14	11.5	9	6	5	4	–	–	12.5	9.5	6	5	4	4	–	–
11'–0"	10.5	8	5	–	–	–	–	–	14	12	8	6.5	5.5	4	–	–	13	10	6.5	5	4	3	–	–
	14	12	10	–	–	–	–	–	14	12	9	7	6	4.5	–	–	14	10.5	7	5.5	4.5	3.5	–	–
	12.5	9.5	5	–	–	–	–	–	12	9	6	4.5	4	3	–	–	9	7	4.5	3.5	3	–	–	–
	14	10	7	–	–	–	–	–	14	10.5	7	5.5	4.5	–	–	–	11.5	8.5	5.5	4.5	3.75	–	–	–
12'–0"	9.5	7	4.5	–	–	–	–	–	14	11.5	7.5	6	5	–	–	–	12	9	6	4.5	4	–	–	–
	14	12	10	–	–	–	–	–	14	12	8	6.5	5.5	–	–	–	13	10	6.5	5	4	–	–	–
	11.5	8.5	4.5	–	–	–	–	–	11	8	5.5	4	3.5	–	–	–	8	6	4	3	–	–	–	–
	13.5	9.5	6	–	–	–	–	–	13	9.5	6.5	5	4	–	–	–	10.5	8	5	4	–	–	–	–
13'–0"	9	6.5	–	–	–	–	–	–	14	10.5	7	5.5	4.5	–	–	–	11	8.5	5.5	4.5	3.5	–	–	–
	14	12	–	–	–	–	–	–	14	11.5	7.5	6	5	–	–	–	12	9	6	4.5	4	–	–	–
	10.5	8	–	–	–	–	–	–	10	7.5	5	4	3	–	–	–	7.5	5.5	4	3	–	–	–	–
	12.5	8.5	–	–	–	–	–	–	12	9	6	4.5	4	–	–	–	9.5	7	5	4	–	–	–	–
14'–0"	8	6	–	–	–	–	–	–	13	9.5	6.5	5	–	–	–	–	10.5	7.5	5	4	–	–	–	–
	14	12	–	–	–	–	–	–	14	10.5	7	5.5	–	–	–	–	11	8.5	5.5	4.5	–	–	–	–
	10	7.5	–	–	–	–	–	–	9	7	4.5	3.5	–	–	–	–	7	5	3.5	3	–	–	–	–
	11.5	8	–	–	–	–	–	–	11	8	5.5	4.5	–	–	–	–	9	6.5	4.5	–	–	–	–	–
15'–0"	7.5	–	–	–	–	–	–	–	12	9	6	–	–	–	–	–	9.5	7	4.5	–	–	–	–	–
	14	–	–	–	–	–	–	–	13.5	10	6.5	–	–	–	–	–	10.5	8	5	–	–	–	–	–
	9	–	–	–	–	–	–	–	8.5	6.5	4	–	–	–	–	–	6.5	5	3	–	–	–	–	–
	10	–	–	–	–	–	–	–	10.5	8	5	–	–	–	–	–	8.5	6	4	–	–	–	–	–
16'–0"	7	–	–	–	–	–	–	–	11.5	8.5	5.5	–	–	–	–	–	9	6.5	4.5	–	–	–	–	–
	14	–	–	–	–	–	–	–	12.5	9.5	6	–	–	–	–	–	10	7.5	5	–	–	–	–	–
	8	–	–	–	–	–	–	–	8	6	4	–	–	–	–	–	6	4.5	3	–	–	–	–	–
	9.5	–	–	–	–	–	–	–	9.5	7	5	–	–	–	–	–	8	6	4	–	–	–	–	–

ANCHORS SPACING LEGEND

TAPCON OR TAPCON WITH ADVANCED THREADFORM TECHNOLOGY
ALL POINTS SOLID–SET
BLUE TAP W/ CAP
TAPPER+

◆ SEE LIMITATIONS OF USE FOR BLADE (1A) ON SHEET 28

(1) HV BLADE OR (1) HV BLADE W/ (1A) HV WINDOW BLADE WORKING IN UNISON ◆

* SPECIFICATIONS ON ANCHOR REQUIREMENTS: POURED CONCRETE OR CONCRETE BLOCK SUBSTRATES

1. ANCHORS TO SUBSTRATE SHALL BE AS FOLLOWS:

(A) TO EXISTING POURED CONCRETE: (Min. f'c = 3 ksi)
- 1/4"ø TAPCON OR TAPCON WITH ADVANCED THREADFORM TECHNOLOGY ANCHORS, AS MANUFACTURED BY I.T.W. BUILDEX. (Min. f'c = 3 ksi)
- 1/4"ø x 3/4" ALL POINTS SOLID–SET ANCHORS, AS DISTRIBUTED BY ALL POINTS SCREW, BOLT & SPECIALTY COMPANY. (Min. f'c = 3 ksi)
- 1/4"ø BLUE TAP CONCRETE ANCHORS W/ CAP AS MANUFACTURED BY FLORIDA FASTENERS DIRECT, INC. (Min. f'c = 2 ksi)
- 1/4"ø TAPPER+ ANCHORS AS MANUFACTURED BY POWERS FASTENERS, INC., AND DISTRIBUTED BY ALL POINTS SCREW, BOLT & SPECIALTY COMPANY OR ANY OTHER APPROVED LICENSED OR AUTHORIZED VENDOR REGISTERED WITH THE AMERICAN SHUTTER SYSTEMS ASSOCIATION, INC. (Min. f'c = 3 ksi)

NOTES:

A.1) MINIMUM EMBEDMENT INTO POURED CONCRETE OF TAPCON OR TAPCON WITH ADVANCED THREADFORM TECHNOLOGY ANCHORS AND TAPPER+ ANCHORS IS 1 3/4", AND FOR BLUE TAP W/ CAP ANCHORS IS 1 1/2".

A.2) MINIMUM EMBEDMENT OF 1/4"ø x 3/4" ALL POINTS SOLID–SET ANCHORS SHALL BE 7/8" INTO THE POURED CONCRETE. NO EMBEDMENT INTO STUCCO SHALL BE PERMITTED. 1/4"ø–20 S.S. MACHINE SCREW USED SHALL BE 1 1/2" LONG MINIMUM SHOULD STUCCO EXIST, AND 1" MINIMUM FOR WALLS WITH NO STUCCO.

A.3) IN CASE THAT PRECAST STONE, PRECAST CONCRETE PANELS, PAVERS OR ANY VENEER BE FOUND ON THE EXISTING WALL OR FLOOR, ANCHORS SHALL BE LONG ENOUGH TO REACH THE MAIN STRUCTURE BEHIND SAID WALL FINISHES. ANCHORAGE SHALL BE AS INDICATED ON NOTES A.1) & A.2) ABOVE. FOR INSTALLATIONS ON VINYL SIDING OR EIFS WITH OR WITHOUT METAL STUDS CONSULT THIS ENGINEER. FOR INSTALLATION INTO EIFS WITH METAL STUDS SEE SHEET 28A.

(B) TO EXISTING CONCRETE BLOCK: (ASTM C–90)
- 1/4"ø TAPCON OR TAPCON WITH ADVANCED THREADFORM TECHNOLOGY ANCHORS, AS MANUFACTURED BY I.T.W. BUILDEX.
- 1/4"ø x 3/4" ALL POINTS SOLID–SET ANCHORS, AS DISTRIBUTED BY ALL POINTS SCREW, BOLT & SPECIALTY COMPANY.
- 1/4"ø BLUE TAP CONCRETE ANCHORS W/ CAP AS MANUFACTURED BY FLORIDA FASTENERS DIRECT, INC.
- 1/4"ø TAPPER+ ANCHORS AS MANUFACTURED BY POWERS FASTENERS, INC., AND DISTRIBUTED BY ALL POINTS SCREW, BOLT & SPECIALTY COMPANY OR ANY OTHER APPROVED LICENSED OR AUTHORIZED VENDOR REGISTERED WITH THE AMERICAN SHUTTER SYSTEMS ASSOCIATION, INC.

NOTES:

B.1) MINIMUM EMBEDMENT INTO CONCRETE BLOCK OF TAPCON, BLUE TAP W/ CAP ANCHORS AND TAPPER+ ANCHORS IS 1 1/4" AND TAPCON WITH ADVANCED THREADFORM TECHNOLOGY ANCHORS IS 1".

B.2) MINIMUM EMBEDMENT OF 1/4"ø x 3/4" ALL POINTS SOLID–SET ANCHORS SHALL BE ENTIRELY EMBEDDED INTO THE CONCRETE BLOCK. NO EMBEDMENT INTO STUCCO SHALL BE PERMITTED. 1/4" ø–20 S.S. MACHINE SCREW USED SHALL BE 1 1/2" LONG MINIMUM SHOULD STUCCO EXIST, AND 1" MINIMUM FOR WALLS WITH NO STUCCO.

B.3) IN CASE THAT PRECAST STONE, PRECAST CONCRETE PANELS, PAVERS OR ANY VENEER BE FOUND ON THE EXISTING WALL OR FLOOR, ANCHORS SHALL BE LONG ENOUGH TO REACH THE MAIN STRUCTURE BEHIND SAID WALL FINISHES. ANCHORAGE SHALL BE AS INDICATED ON NOTES B.1) & B.2) ABOVE. FOR INSTALLATIONS ON VINYL SIDING OR EIFS WITH OR WITHOUT METAL STUDS CONSULT THIS ENGINEER. FOR INSTALLATION INTO EIFS WITH METAL STUDS SEE SHEET 28A.

(C) ANCHORS SHALL BE INSTALLED FOLLOWING ALL OF THE RECOMMENDATIONS AND SPECIFICATIONS OF THE ANCHOR'S MANUFACTURER.

(D) SEE SCHEDULE BELOW FOR EDGE DISTANCE (E.D.) VERSUS SPACING RELATIONSHIP FOR ANCHORS.

EDGE DISTANCE VERSUS SPACING SCHEDULE FOR ANCHORS:

MAXIMUM ANCHOR SPACINGS ARE VALID FOR EOGE DISTANCES INDICATED BELOW. FOR E. D. LESS THAN THE INDICATED, REDUCE ANCHOR SPACING BY MULTIPLYING SPACING SHOWN ON SCHEDULE BY THE FOLLOWING FACTORS.
REDUCED SPACING OBTAINED USING FACTOR SHALL NOT BE LESS THAN MINIMUM SPACING INDICATED FOR EACH ANCHOR TYPE.

ACTUAL EDGE DICTANCE E.D.	FACTOR						
	TAPCON	TAPCON WITH ADVANCED THREADFORM TECHNOLOGY		ALL POINT SOLID SET	BLUE TAP W/ CAP	TAPPER + MIN. SPACING	
	MIN. SPACING = 3"	MIN. SPACING = 3"		MIN. SPACING = 3 1/2"	MIN. SPACING = 3"	3 3/4"	4"
	POURED CONCRETE & CONCRETE BLOCK MIN. E.D. = 3"	POURED CONCRETE MIN. E.D. = 3 1/2"	CONCRETE BLOCK MIN. E.D. = 2 1/2"	POURED CONCRETE & CONCRETE BLOCK MIN. E.D. = 3 1/2"	POURED CONCRETE & CONCRETE BLOCK MIN. E.D. = 3"	POURED CONCRETE MIN. E.D. = 3 1/2"	CONCRETE BLOCK MIN. E.D. = 2 1/2"
3"	1.0	0.90	1.0	0.78	1.0	0.84	1.0
2 1/2"	–	0.81	1.0	–	–	0.67	1.0
2"	–	0.71	–	–	–	0.51	–
1 3/4"	–	0.91 ((A)&(B) MOUNTINGS ONLY)	–	–	–	0.43	–
1 1/2"	0.35	–	–	–	–	0.35	–

FLORIDA BUILDING CODE (High Velocity Hurricane Zone)

PRODUCT REVISED
as complying with the Florida Building Code
Acceptance No 11-0325.02
Expiration Date 03/23/2016
By Miami Dade Product Control

MIAMI–DADE COUNTY

WALTER A. TILLIT JR. LICENSE No. 44167 STATE OF FLORIDA PROFESSIONAL ENGINEER
P.E. SEAL/SIGNATURE/DATE

TILTECO INC.
TILLIT TESTING & ENGINEERING COMPANY
6355 N.W. 36th. St., Ste. 305, VIRGINIA GARDENS, FLORIDA 33166
Phone : (305)871–1530 . Fax : (305)871–1531
e–mail: tilteco@aol.com
EB–0006719
WALTER A. TILLIT Jr. P.E.
FLORIDA Lic. # 44167

PERFECT STORM SHUTTERS, INC.

(ASSA # 388)

12334 SW 131 AVE.
MIAMI, FL 33186
Phone:(305)256–8085, Fax:(305)256–8099

© 2011 EASTERN METAL SUPPLY, INC.

BERTHA HV™
Accordion Shutter System

REV.No	DESCRIPTION	DATE	DRAWN BY: M.C.V.
1	OLD DWG: 05–381	03/24/11	DATE: 03/24/11
2			DRAWING No 11–030
3			
4			
5			SHEET 14 OF 28
6			

MAXIMUM ANCHOR* SPACING (in.) SCHEDULE FOR A GIVEN MAX. SHUTTER SPAN, DESIGN NEGATIVE LOAD AND A CORRESPONDING MOUNTING TYPE FOR CONCRETE OR CONCRETE BLOCK INSTALLATIONS

(SEE MOUNTINGS I, J, K & L ON SHEET 7)

MAXIMUM SPAN (ft)	POURED CONCRETE																POURED CONCRETE/CONCRETE BLOCK															
	(I) WALK OVER MOUNTING								(J) RAINGUARD MOUNTING								(K) WALL/FLOOR MOUNTING								(L) WALL/WALK OVER MOUNTING							
	DESIGN NEGATIVE LOAD (psf)								DESIGN NEGATIVE LOAD (psf)								DESIGN NEGATIVE LOAD (psf)								DESIGN NEGATIVE LOAD (psf)							
	30	40	60	75	90	120	160	205	30	40	60	75	90	120	160	205	30	40	60	75	90	120	160	205	30	40	60	75	90	120	160	205
3'-0" OR LESS	14	12	10	9	8	8	6	6	12	12	12	12	12	11.5	8.5	6.5	7	7	7	7	7	7	7	5.5	5	5	5	5	5	5	5	5
	14	12	10	9	8	8	6	6	12	12	12	12	12	12	9.5	7	7	7	7	7	7	7	7	7	5	5	5	5	5	5	5	5
	14	12	10	9	8	8	6	6	12	12	12	12	10.5	8	6	4.5	7	7	7	7	7	7	7	6.5	5	5	5	5	5	5	5	5
	14	12	10	9	8	8	6	6	12	12	12	12	12	10	7.5	6	7	7	7	7	7	7	7	7	5	5	5	5	5	5	5	5
4'-0"	14	12	10	9	8	8	6	6	12	12	12	12	11.5	8.5	6.5	5	7	7	7	7	7	7	5.5	4	5	5	5	5	5	5	5	4
	14	12	10	9	8	8	6	6	12	12	12	12	12	9.5	7	5.5	7	7	7	7	7	7	7	7	5	5	5	5	5	5	5	5
	14	12	10	9	8	8	6	6	12	12	12	9.5	8	6	4.5	3.5	7	7	7	7	7	7	6.5	5	5	5	5	5	5	5	5	5
	14	12	10	9	8	8	6	6	12	12	12	12	10	7.5	5.5	4	7	7	7	7	7	7	7	5.5	5	5	5	5	5	5	5	5
5'-0"	14	12	10	9	8	8	6	6	12	12	12	11	9	7	5	4	7	7	7	7	7	5.5	4	3	5	5	5	5	5	5	4	3
	14	12	10	9	8	8	6	6	12	12	12	12	10	7.5	5.5	4	7	7	7	7	7	7	7	7	5	5	5	5	5	5	5	5
	14	12	10	9	8	8	6	6	12	12	9.5	7.5	6	4.5	3.5	–	7	7	7	7	7	7	5	3.5	5	5	5	5	5	5	5	4
	14	12	10	9	8	8	6	6	12	12	12	9.5	8	6	4.5	–	7	7	7	7	7	7	5.5	4	5	5	5	5	5	5	5	4
6'-0"	14	12	10	9	8	8	6	6	12	12	11.5	9	7.5	5.5	4	3	7	7	7	7	7	4.5	3.5	–	5	5	5	5	5	4.5	3.5	–
	14	12	10	9	8	8	6	6	12	12	12	10	8	6	4.5	3.5	7	7	7	7	7	7	7	7	5	5	5	5	5	5	5	5
	14	12	10	9	8	8	6	6	12	12	8	6	5	4	3	–	7	7	7	7	7	5.5	4	–	5	5	5	5	5	5	4	3
	14	12	10	9	8	8	6	6	12	12	10	8	6.5	5	3.75	–	7	7	7	7	7	6	4.5	–	5	5	5	5	5	5	4.5	–
7'-0"	14	12	10	9	8	8	6	6	12	12	10	8	6.5	5	3.5	–	7	7	7	6.5	5.5	4	–	–	5	5	5	5	5	4	3	–
	14	12	10	9	8	8	6	6	12	12	12	8.5	7	5	4	3	7	7	7	7	7	7	7	6	5	5	5	5	5	5	5	5
	14	12	10	9	8	8	6	6	12	10	6.5	5	4.5	3	–	–	7	7	7	7	6.5	5	3	–	5	5	5	5	5	5	3.5	3
	14	12	10	9	8	8	6	6	12	12	8.5	7	5.5	4	–	–	7	7	7	7	7	5	–	–	5	5	5	5	5	5	4	–
8'-0"	14	12	10	9	8	8	6	–	12	12	8.5	7	5.5	4	3	–	7	7	7	5.5	4.5	3	–	–	5	5	5	5	4.5	3.5	–	–
	14	12	10	9	8	8	6	–	12	12	10.5	7.5	6	4.5	3.5	–	7	7	7	7	7	7	7	4	5	5	5	5	5	5	5	5
	14	12	10	9	8	8	6	–	12	9	6	4.5	4	3	–	–	7	7	7	7	5.5	4	–	–	5	5	5	5	5	4	3	–
	14	12	10	9	8	8	6	–	12	11	7.5	6	5	3.75	–	–	7	7	7	7.5	6	4.5	–	–	5	5	5	5	5	4.5	–	–
9'-0"	14	12	10	9	8	8	–	–	12	11.5	7.5	6	5	3.5	–	–	7	7	6.5	5	4	–	–	–	5	5	5	5	4	3	–	–
	14	12	10	9	8	8	–	–	12	12	9.5	6.5	5.5	4	3	–	7	7	7	7	7	7	6	3	5	5	5	5	5	5	5	5
	14	12	10	9	8	8	–	–	10.5	8	5	4	3.5	–	–	–	7	7	7	6	5	3.5	–	–	5	5	5	5	5	4	3	–
	14	12	10	9	8	8	–	–	12	10	6.5	5	4.5	–	–	–	7	7	7	6.5	5.5	–	–	–	5	5	5	5	5	4	–	–
10'-0"	14	12	10	9	8	8	–	–	12	10.5	7	5.5	4.5	3.5	–	–	7	7	5.5	4.5	3.5	–	–	–	5	5	5	4.5	3.5	–	–	–
	14	12	10	9	8	8	–	–	12	11	8.5	6	5	3.5	–	–	7	7	7	7	7	7	4.5	–	5	5	5	5	5	5	5	4.5
	14	12	10	9	8	8	–	–	9.5	7	4.5	3.5	3	–	–	–	7	7	7	5.5	4.5	–	–	–	5	5	5	5	4.5	3.5	–	–
	14	12	10	9	8	8	–	–	12	9	6	5	4	–	–	–	7	7	7	6	5	–	–	–	5	5	5	4.5	5	–	–	–
11'-0"	14	12	10	9	8	8	–	–	12	9.5	6	5	4	3	–	–	7	7	5	4	3	–	–	–	5	5	5	4	3.5	–	–	–
	14	12	10	9	8	8	–	–	12	10	7	5.5	4.5	3.5	–	–	7	7	7	7	7	7	3.5	–	5	5	5	5	5	5	5	4
	14	12	10	9	8	8	–	–	8.5	6.5	4	3.5	3	–	–	–	7	7	6	5	4	–	–	–	5	5	5	5	4	3	–	–
	14	12	10	9	8	8	–	–	11	8	5.5	4	–	–	–	–	7	7	7	5.5	4.5	–	–	–	5	5	5	5	4.5	–	–	–
12'-0"	14	12	10	9	8	–	–	–	11.5	8.5	5.5	4.5	3.5	–	–	–	7	7	4.5	3.5	–	–	–	–	5	5	4.5	3.5	3	–	–	–
	14	12	10	9	8	–	–	–	12	9.5	6.5	5	4	3	–	–	7	7	7	7	7	6	3	–	5	5	5	5	5	5	4.5	3.5
	14	12	10	9	8	–	–	–	8	6	4	3	–	–	–	–	7	7	5.5	4.5	3.5	–	–	–	5	5	5	4.5	4	3	–	–
	14	12	10	9	8	–	–	–	10	7.5	5	4	–	–	–	–	7	7	6	5	–	–	–	–	5	5	5	5	4	–	–	–
13'-0"	14	12	10	9	8	–	–	–	10.5	8	5	4	3.5	–	–	–	7	6.5	4.5	3.5	–	–	–	–	5	5	4.5	3.5	3	–	–	–
	14	12	10	9	8	–	–	–	11.5	8.5	6	4.5	3.5	3	–	–	7	7	7	7	7	4.5	–	–	5	5	5	5	5	5	4.5	3.5
	14	12	10	9	8	–	–	–	7	5.5	3.5	3	–	–	–	–	7	7	5	4	3	–	–	–	5	5	5	4	3	–	–	–
	14	12	10	9	8	–	–	–	9	7	4.5	3.75	–	–	–	–	7	7	5.5	4.5	–	–	–	–	5	5	5	4.5	4	–	–	–
14'-0"	14	12	10	9	–	–	–	–	10	7.5	5	4	3	–	–	–	7	6	4	3	–	–	–	–	5	5	4	3	–	–	–	–
	14	12	10	9	–	–	–	–	10.5	8	5.5	4	3.5	–	–	–	7	7	7	7	7	4	–	–	5	5	5	5	5	5	4	3
	14	12	10	9	–	–	–	–	6.5	5	3	–	–	–	–	–	7	7	5	3.5	–	–	–	–	5	5	5	4	–	–	–	–
	14	12	10	9	–	–	–	–	8.5	6.5	4	–	–	–	–	–	7	7	5	4	–	–	–	–	5	5	5	4	–	–	–	–
15'-0"	14	12	10	–	–	–	–	–	9	7	4.5	3.5	3	–	–	–	7	5.5	3.5	–	–	–	–	–	5	5	3.5	3	–	–	–	–
	14	12	10	–	–	–	–	–	10	7.5	5	4	3	–	–	–	7	7	7	7	7	3.5	–	–	5	5	5	5	5	5	4	3
	14	12	10	–	–	–	–	–	6	4.5	3	–	–	–	–	–	7	7	4.5	3	–	–	–	–	5	5	4.5	3.5	–	–	–	–
	14	12	10	–	–	–	–	–	8	6	4	–	–	–	–	–	7	7	5	–	–	–	–	–	5	5	5	4	–	–	–	–
16'-0"	14	12	10	–	–	–	–	–	8.5	6.5	4	3.5	–	–	–	–	7	5.5	3.5	–	–	–	–	–	5	5	3.5	–	–	–	–	–
	14	12	10	–	–	–	–	–	9.5	7	4.5	3.5	3	–	–	–	7	7	7	7	6	3	–	–	5	5	5	5	5	4.5	3.5	–
	14	12	10	–	–	–	–	–	6	4.5	3	–	–	–	–	–	7	6.5	4	–	–	–	–	–	5	5	4	3.5	–	–	–	–
	14	12	10	–	–	–	–	–	7.5	5.5	3.75	–	–	–	–	–	7	7	4.5	–	–	–	–	–	5	5	4.5	–	–	–	–	–

ANCHORS SPACING LEGEND

TAPCON OR TAPCON WITH ADVANCED THREADFORM TECHNOLOGY
ALL POINTS SOLID-SET
BLUE TAP
TAPPER+

* SEE ANCHOR SPECIFICATIONS ON SHEET 14

① HV BLADE ONLY

FLORIDA BUILDING CODE (High Velocity Hurricane Zone)

PRODUCT REVISED
as complying with the Florida Building Code
Acceptance No 11-0325.02
Expiration Date 03/23/2016
By Miami Dade Product Control

MIAMI-DADE COUNTY

WALTER A. TILLIT JR. LICENSE No. 44167 STATE OF FLORIDA PROFESSIONAL ENGINEER

P.E. SEAL/SIGNATURE/DATE

TILTECO INC.
TILLIT TESTING & ENGINEERING COMPANY
6355 N.W. 36th. St., Ste. 305, VIRGINIA GARDENS, FLORIDA 33166
Phone : (305)871-1530 . Fax : (305)871-1531
e-mail: tilteco@aol.com
EB-0006719
WALTER A. TILLIT Jr. P.E.
FLORIDA Lic. # 44167

PERFECT STORM SHUTTERS, INC.

(ASSA # 388)

12334 SW 131 AVE.
MIAMI, FL 33186
Phone:(305)256-8085, Fax:(305)256-8099

© 2011 EASTERN METAL SUPPLY, INC.

BERTHA HV™
Accordion Shutter System

REV.No	DESCRIPTION	DATE	DRAWN BY: M.C.V.
1	OLD DWG: 05-381	03/24/11	DATE: 03/24/11
2			DRAWING No 11-030
3			
4			
5			SHEET 15 OF 28
6			

MAXIMUM ANCHOR+ SPACING (in.) SCHEDULE FOR A GIVEN MAX. SHUTTER SPAN, NEGATIVE DESIGN LOAD AND A CORRESPONDING MOUNTING TYPE

(SEE MOUNTINGS ON SHEETS 18 & 19)

SUBSTRATE

MAXIMUM SPAN (ft)	SOUTHERN PINE No. 2 W/ MIN. G=0.55, DOUGLAS FIR W/ MIN. G=0.50											
	WALL MOUNTINGS M, N, O & R						CEILING MOUNT T FLOOR MOUNTINGS W & X					
	NEGATIVE DESIGN LOAD (psf)						NEGATIVE DESIGN LOAD (psf)					
	30	40	60	75	90	105	30	40	60	75	90	105
3'-0" OR LESS	12	10	10	9	8	8	6	6	6	6	6	5
4'-0"	12	10	10	9	8	8	6	6	6	5	4.5	4
5'-0"	12	10	10	9	8	8	6	6	5	4	3.5	3
6'-0"	12	10	10	9	8	6.5	6	6	4.5	3.5	3	2.5
7'-0"	12	10	10	9	6.5	4	6	5.5	4	3	2.5	2
8'-0"	12	10	10	7.5	4.5	3	6	5	3	2.5	2	2
9'-0"	12	10	10	5	3.5	–	6	4.5	3	2	2	–
10'-0"	12	10	7.5	4	–	–	5	4	2.5	2	–	–
11'-0"	12	10	5.5	–	–	–	5	3.5	2	–	–	–
12'-0"	12	10	4.5	–	–	–	4.5	3	2	–	–	–
13'-0"	12	10	–	–	–	–	4	3	–	–	–	–
14'-0"	12	10	–	–	–	–	4	3	–	–	–	–
15'-0"	12	–	–	–	–	–	3.5	–	–	–	–	–
16'-0"	12	–	–	–	–	–	3	–	–	–	–	–

MAXIMUM SPAN (ft)	SPRUCE PINE FIR NORTH W/ MIN. G=0.43											
	WALL MOUNTINGS M, N, O & R						CEILING MOUNT T FLOOR MOUNTINGS W & X					
	NEGATIVE DESIGN LOAD (psf)						NEGATIVE DESIGN LOAD (psf)					
	30	40	60	75	90	105	30	40	60	75	90	105
3'-0" OR LESS	12	10	10	9	8	8	6	6	6	6	5	4
4'-0"	12	10	10	9	8	8	6	6	5.5	4.5	3.5	3
5'-0"	12	10	10	9	8	8	6	6	4.5	3.5	3	2.5
6'-0"	12	10	10	9	8	4.5	6	5.5	3.5	3	2.5	2
7'-0"	12	10	10	9	4.5	3	6	5	3	2.5	2	–
8'-0"	12	10	10	5.5	3	–	5.5	4	2.5	2	2	–
9'-0"	12	10	8.5	4	–	–	5	3.5	2.5	2	–	–
10'-0"	12	10	5.5	3	–	–	4.5	3	2	–	–	–
11'-0"	12	10	4	–	–	–	4	3	2	–	–	–
12'-0"	12	10	3	–	–	–	3.5	2.5	–	–	–	–
13'-0"	12	10	–	–	–	–	3.5	2.5	–	–	–	–
14'-0"	12	7	–	–	–	–	3	2	–	–	–	–
15'-0"	12	–	–	–	–	–	3	–	–	–	–	–
16'-0"	12	–	–	–	–	–	2.5	–	–	–	–	–

MAXIMUM SPAN (ft)	SPRUCE PINE FIR SOUTH W/ MIN. G=0.36											
	WALL MOUNTINGS M, N, O & R						CEILING MOUNT T FLOOR MOUNTINGS W & X					
	NEGATIVE DESIGN LOAD (psf)						NEGATIVE DESIGN LOAD (psf)					
	30	40	60	75	90	105	30	40	60	75	90	105
3'-0" OR LESS	12	10	10	9	8	8	6	6	6	4.5	4	3
4'-0"	12	10	10	9	8	8	6	6	4.5	3.5	3	2.5
5'-0"	12	10	10	9	8	7	6	5.5	3.5	3	2	2
6'-0"	12	10	10	9	6	3	6	4.5	3	2	2	–
7'-0"	12	10	10	7	3	–	5	4	2.5	2	–	–
8'-0"	12	10	10	4	–	–	4.5	3	2	–	–	–
9'-0"	12	10	4	2.5	–	–	4	3	2	–	–	–
10'-0"	12	10	3	–	–	–	3.5	2.5	–	–	–	–
11'-0"	12	10	–	–	–	–	3	2.5	–	–	–	–
12'-0"	12	10	–	–	–	–	3	2	–	–	–	–
13'-0"	12	7	–	–	–	–	2.5	2	–	–	–	–
14'-0"	12	5	–	–	–	–	2.5	2	–	–	–	–
15'-0"	11.5	–	–	–	–	–	2	–	–	–	–	–
16'-0"	11	–	–	–	–	–	2	–	–	–	–	–

MAXIMUM SPAN (ft)	1/2" MIN. CDX PLYWOOD					
	WALL MOUNTINGS P & Q					
	NEGATIVE DESIGN LOAD (psf)					
	30	40	60	75	90	105
3'-0" OR LESS	6	5	4	4	4	3
4'-0"	6	5	4	4	4	3
5'-0"	6	5	4	4	4	3
6'-0"	6	5	4	4	3.5	–
7'-0"	6	5	4	4	–	–
8'-0"	6	5	4	–	–	–
9'-0"	6	5	3.5	–	–	–
10'-0"	6	5	–	–	–	–
11'-0"	6	5	–	–	–	–
12'-0"	6	5	–	–	–	–
13'-0"	6	4	–	–	–	–
14'-0"	6	3	–	–	–	–
15'-0"	6	–	–	–	–	–
16'-0"	6	–	–	–	–	–

+ NOTES ON ANCHORS REQUIREMENTS: WOOD SUBSTRATES.

1. ANCHORS TO WALL, FLOOR OR SOLID WOOD SOFFIT SHALL BE AS FOLLOWS:

– 1/4"ø TAPCON OR TAPCON WITH ADVANCED THREADFORM TECHNOLOGY ANCHORS, AS MANUFACTURED BY I.T.W. BUILDEX W/ MINIMUM THREADED PENETRATION AS INDICATED AT EACH SECTION ON SHEETS 18 & 19. EXCEPTION: SEE NOTE 2 BELOW.

2. ANCHORS TO HOLLOW CEILING SHALL BE AS PER MOUNTING TYPE U, SHEET 19 AND SHALL CONSIST OF LAG SCREWS AS PER N.D.S. 2005 SPECIFICATIONS.

3. SUBSTRATE SHALL CONSIST OF THE FOLLOWING:

–SOUTHERN PINE No. 2 W/ G=0.55 (N.D.S)
–DOUGLAS FIR W/ G=0.50 (N.D.S.)
–SPRUCE PINE FIR NORTH W/ G=0.43 (N.D.S.)
–SPRUCE PINE FIR SOUTH W/ G=0.36 (N.D.S.)
–MIN. 1/2" CDX PLYWOOD (1986 APA)

4. ANCHORS SHALL BE INSTALLED FOLLOWING ALL OF THE RECOMMENDATIONS AND SPECIFICATIONS OF THE ANCHOR'S MANUFACTURER.

(1) HV BLADE OR (1) HV BLADE W/ (1A) HV WINDOW BLADE WORKING IN UNISON ◆

◆ SEE LIMITATIONS OF USE OF BLADE (1A) ON SHEET 28

FLORIDA BUILDING CODE (High Velocity Hurricane Zone)

PRODUCT REVISED
as complying with the Florida Building Code
Acceptance No 11-0325.02
Expiration Date 03/23/2016
By Miami Dade Product Control

MIAMI-DADE COUNTY

WALTER A. TILLIT JR. LICENSE No. 44167 STATE OF FLORIDA PROFESSIONAL ENGINEER

P.E. SEAL, SIGNATURE, DATE

TILTECO INC.
TILLIT TESTING & ENGINEERING COMPANY
6355 N.W. 36th. St., Ste. 305, VIRGINIA GARDENS, FLORIDA 33166
Phone : (305)871-1530 . Fax : (305)871-1531
e-mail: tilteco@aol.com
E8-0006719
WALTER A. TILLIT Jr. P.E.
FLORIDA Lic. # 44167

PERFECT STORM SHUTTERS, INC.

(ASSA # 388)

12334 SW 131 AVE.
MIAMI, FL 33186
Phone:(305)256-8085, Fax:(305)256-8099

© 2011 EASTERN METAL SUPPLY, INC.

BERTHA HV™
Accordion Shutter System

REV.No	DESCRIPTION	DATE
1	OLD DWG: 05-381	03/24/11
2		
3		
4		
5		
6		

DRAWN BY: M.C.V.
DATE: 03/24/11

DRAWING No 11-030

SHEET 16 OF 28

MAXIMUM ANCHOR+ SPACING (in.) SCHEDULE FOR A GIVEN MAX. SHUTTER SPAN, NEGATIVE DESIGN LOAD AND A CORRESPONDING MOUNTING TYPE

(SEE MOUNTINGS ON SHEET 19)

MAXIMUM SPAN (ft)	SUBSTRATE																	
	SOUTHERN PINE No. 2 W/ MIN. G=0.55, DOUGLAS FIR W/ MIN. G=0.50						SPRUCE PINE FIR NORTH W/ MIN. G=0.43						SPRUCE PINE FIR SOUTH W/ MIN. G=0.36					
	B.O. WALL MOUNTINGS S & V						B.O. WALL MOUNTINGS S & V						B.O. WALL MOUNTINGS S & V					
	NEGATIVE DESIGN LOAD (psf)						NEGATIVE DESIGN LOAD (psf)						NEGATIVE DESIGN LOAD (psf)					
	30	40	60	75	90	105	30	40	60	75	90	105	30	40	60	75	90	105
3'-0" OR LESS	12	12	12	12	12	12	12	12	12	12	12	12	12	12	12	12	12	12
4'-0"	12	12	12	12	12	12	12	12	12	12	12	12	12	12	12	12	12	12
5'-0"	12	12	12	12	12	12	12	12	12	12	12	12	12	12	12	12	11.5	10
6'-0"	12	12	12	12	12	12	12	12	12	12	12	12	12	12	12	11.5	9.5	8
7'-0"	12	12	12	12	12	12	12	12	12	12	12	10	12	12	12	10	8	8
8'-0"	12	12	12	12	12	12	12	12	12	12	10.5	9	12	12	11	8.5	7	7
9'-0"	12	12	12	12	12	10.5	12	12	12	11	9	8	12	12	9.5	7.5	6.5	6
10'-0"	12	12	12	12	11.5	9.5	12	12	12	10	8	7	12	12	8.5	7	6	5.5
11'-0"	12	12	12	12	10	8.5	12	12	11.5	9	7.5	6.5	12	12	8	6	5	5
12'-0"	12	12	12	11.5	9.5	8	12	12	10.5	8	7	6	12	11	7	6	5	4.5
13'-0"	12	12	12	10.5	8.5	7.5	12	12	9.5	7.5	6	5.5	12	10	6.5	5	4.5	4
14'-0"	12	12	12	9.5	8	6	12	12	9	7	6	4.5	12	9.5	6	5	4	3.5
15'-0"	12	12	11	9	7.5	5	12	12	8	6.5	5.5	3.5	11.5	8.5	6	4.5	4	3
16'-0"	12	12	10.5	8.5	6.5	4	11.5	12	8	6	4.5	3	11	8	5.5	4	3	–

① HV BLADE ONLY

+ NOTES ON ANCHORS REQUIREMENTS: WOOD SUBSTRATES.

1. ANCHORS TO WALL, FLOOR OR SOLID WOOD SOFFIT SHALL BE AS FOLLOWS:

– 1/4"ø TAPCON OR TAPCON WITH ADVANCED THREADFORM TECHNOLOGY ANCHORS, AS MANUFACTURED BY I.T.W. BUILDEX W/ MINIMUM THREADED PENETRATION AS INDICATED AT EACH SECTION ON SHEETS 18 & 19. EXCEPTION: SEE NOTE 2 BELOW.

2. ANCHORS TO HOLLOW CEILING SHALL BE AS PER MOUNTING TYPE U, SHEET 19 AND SHALL CONSIST OF LAG SCREWS AS PER NDS 2005 SPECIFICATIONS.

3. SUBSTRATE SHALL CONSIST OF THE FOLLOWING:

–SOUTHERN PINE No. 2 W/ G=0.55 (N.D.S)
–DOUGLAS FIR W/ G=0.50 (N.D.S.)
–SPRUCE PINE FIR NORTH W/ G=0.43 (N.D.S.)
–SPRUCE PINE FIR SOUTH W/ G=0.36 (N.D.S.)
–MIN. 1/2" CDX PLYWOOD (1986 APA)

4. ANCHORS SHALL BE INSTALLED FOLLOWING ALL OF THE RECOMMENDATIONS AND SPECIFICATIONS OF THE ANCHOR'S MANUFACTURER.

FLORIDA BUILDING CODE (High Velocity Hurricane Zone)

PRODUCT REVISED
as complying with the Florida Building Code
Acceptance No 11-0325.02
Expiration Date 03/23/2016
By Helena A. Melo
Miami Dade Product Control

MIAMI-DADE COUNTY

WALTER A. TILLIT JR. LICENSE No. 44167 STATE OF FLORIDA PROFESSIONAL ENGINEER
3/24/11
P.E. SEAL, SIGNATURE AND DATE

TILTECO INC.
TILLIT TESTING & ENGINEERING COMPANY
8355 N.W. 36th. St., Ste. 305, VIRGINIA GARDENS, FLORIDA 33166
Phone : (305)871-1530 . Fax : (305)871-1531
e-mail: tilteco@aol.com
EB-0006719
WALTER A. TILLIT Jr. P.E.
FLORIDA Lic. # 44167

PERFECT STORM SHUTTERS, INC.

(ASSA # 388)

12334 SW 131 AVE.
MIAMI, FL 33186
Phone:(305)256-8085, Fax:(305)256-8099

© 2011 EASTERN METAL SUPPLY, INC.

BERTHA HV™
Accordion Shutter System

REV.No	DESCRIPTION	DATE
1	OLD DWG: 05-381	03/24/11
2		
3		
4		
5		
6		

DRAWN BY: M.C.V.
DATE: 03/24/11

DRAWING No 11-030

SHEET 17 OF 28

INSTALLATION DETAILS ON EXISTING WOOD BUILDINGS FOR (1) HV & (1A) HV◆ BLADES (AS APPLICABLE)

MAX. SHUTTER SPAN L+ OR L– FOR INSTALLATIONS INTO WOOD WITH HV BLADE (1) ONLY SHALL BE LIMITED TO 105.0 psf. DESIGN LOAD, SEE SHEET 28 FOR MAX SPAN & DESIGN LOAD FOR INSTALLATION WITH BLADE (1) & (1A) WORKING IN UNISON

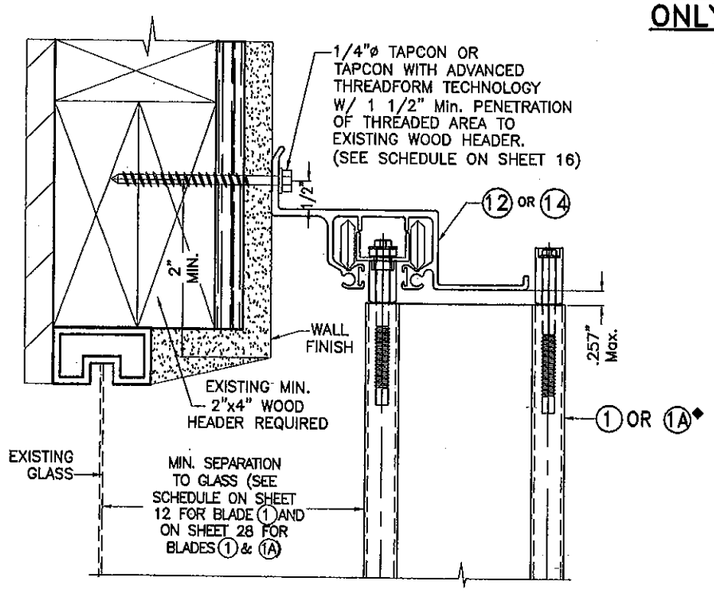

(M) HV WALL HEADER INSTALLATION

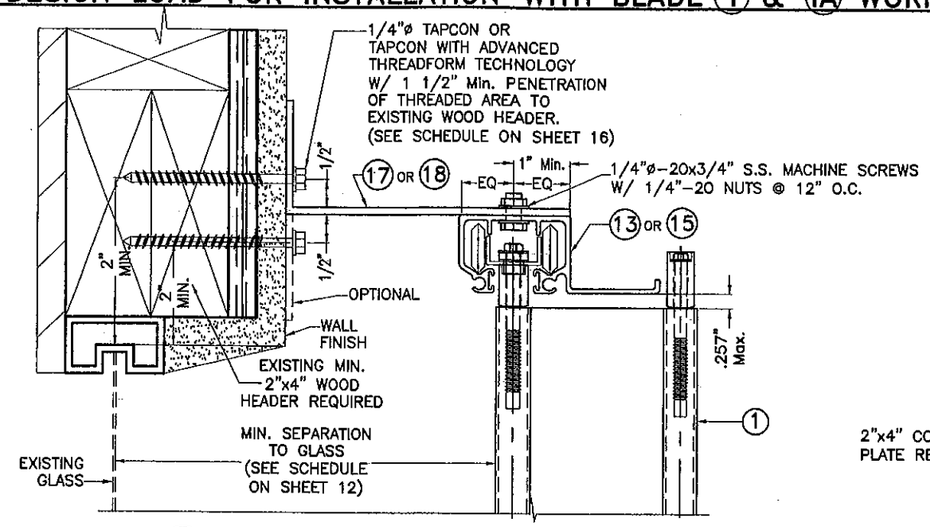

(N) HV WALL HEADER INSTALLATION

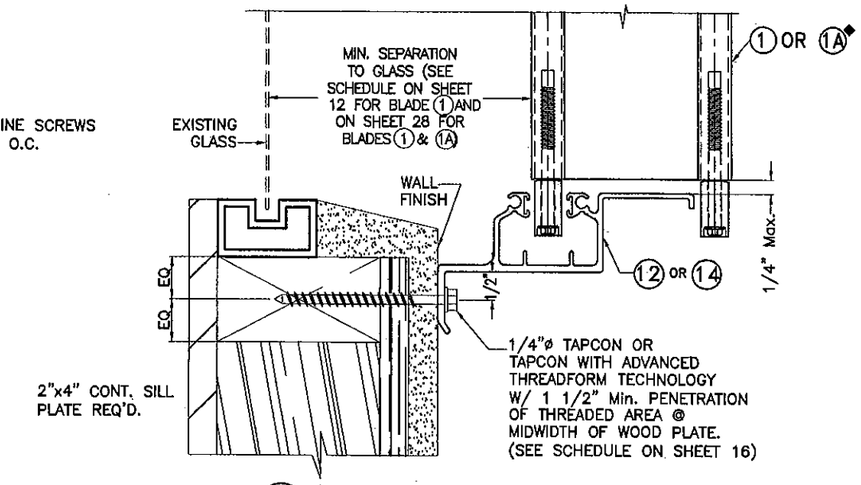

(O) HV WALL SILL INSTALLATION

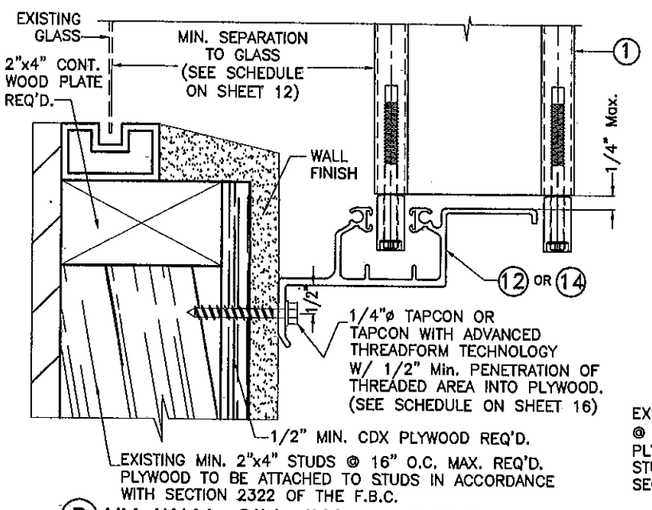

(P) HV WALL SILL INSTALLATION

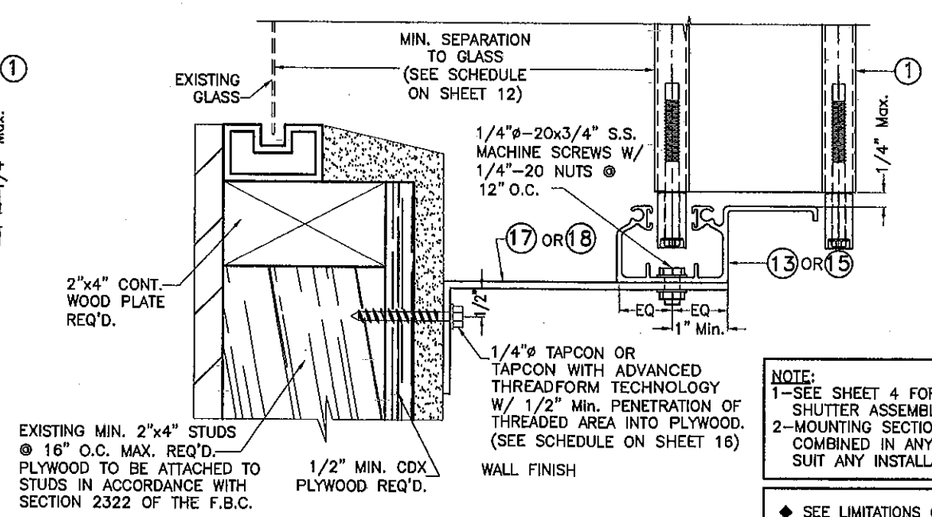

(Q) HV WALL SILL INSTALLATION

NOTE:
1–SEE SHEET 4 FOR TYPICAL SHUTTER ASSEMBLY.
2–MOUNTING SECTIONS CAN BE COMBINED IN ANY WAY TO SUIT ANY INSTALLATION.

◆ SEE LIMITATIONS OF USE OF BLADE (1A) ON SHEET 28

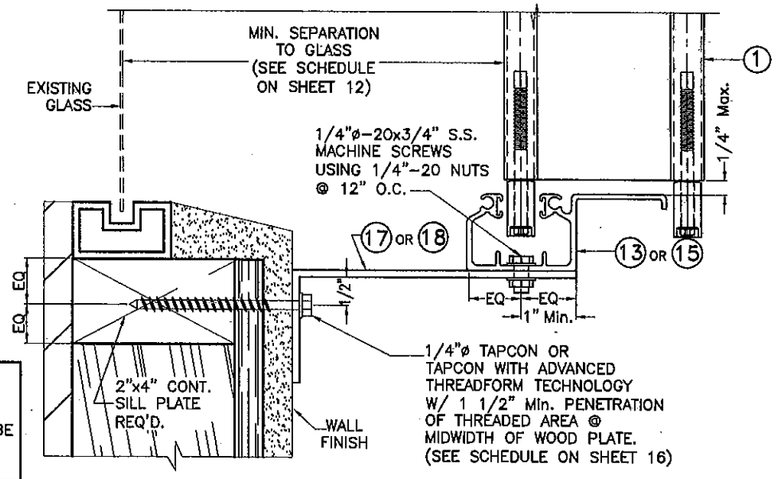

(R) HV WALL SILL INSTALLATION

FLORIDA BUILDING CODE (High Velocity Hurricane Zone)

PRODUCT REVISED
as complying with the Florida Building Code
Acceptance No 11-0325.02
Expiration Date 03/23/2016
By [signature]
Miami Dade Product Control

MIAMI–DADE COUNTY

WALTER A. TILLIT JR. LICENSE No. 44167 STATE OF FLORIDA PROFESSIONAL ENGINEER

P.E. SEAL, SIGNATURE & DATE

TILTECO INC.

TILLIT TESTING & ENGINEERING COMPANY
6355 N.W. 36th. St., Ste. 305, VIRGINIA GARDENS, FLORIDA 33166
Phone : (305)871–1530 . Fax : (305)871–1531
e–mail: tilteco@aol.com
EB–0006719
WALTER A. TILLIT Jr. P.E.
FLORIDA Lic. # 44167

PERFECT STORM SHUTTERS, INC.

(ASSA # 388)

12334 SW 131 AVE.
MIAMI, FL 33186
Phone:(305)256–8085, Fax:(305)256–8099

© 2011 EASTERN METAL SUPPLY, INC.

BERTHA HV™
Accordion Shutter System

REV.No	DESCRIPTION	DATE	DRAWN BY: M.C.V.
1	OLD DWG: 05–381	03/24/11	DATE: 03/24/11
2			DRAWING No
3			11–030
4			
5			SHEET
6			18 OF 28

INSTALLATION DETAILS ON EXISTING WOOD BUILDINGS FOR (1) HV & (1A) HV◆ BLADES (AS APPLICABLE)

MAX. SHUTTER SPAN L+ OR L– FOR INSTALLATIONS INTO WOOD WITH HV BLADE (1) ONLY SHALL BE LIMITED TO 105.0 psf. DESIGN LOAD, SEE SHEET 28 FOR MAX SPAN & DESIGN LOAD FOR INSTALLATION WITH BLADE (1) & (1A) WORKING IN UNISON

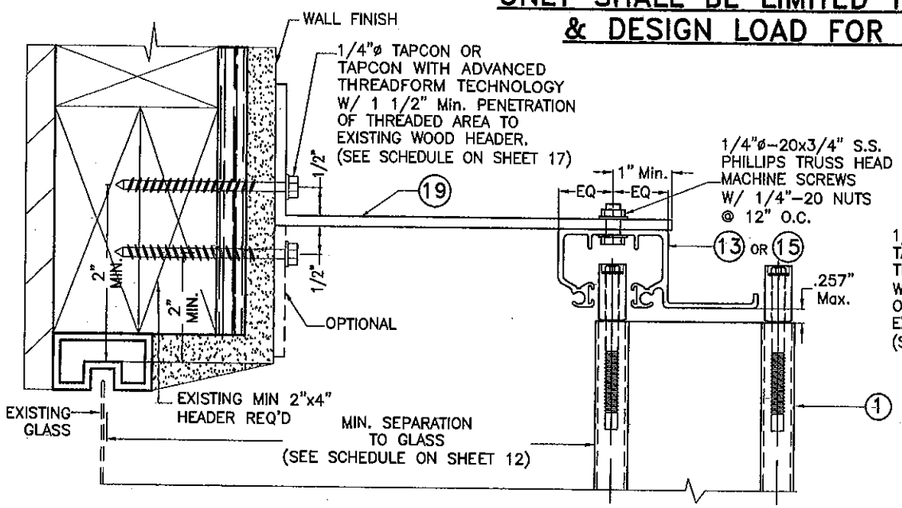

(S) HV WALL HEADER INSTALLATION

NOTES:
1–SEE SHEET 4 FOR TYPICAL SHUTTER ASSEMBLY,
2–MOUNTING SECTIONS CAN BE COMBINED IN ANY WAY TO SUIT ANY INSTALLATION.

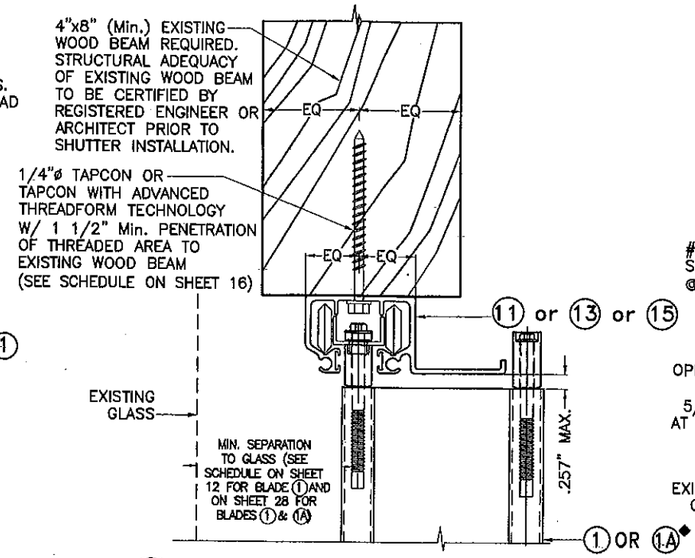

(T) HV CEILING INSTALLATION

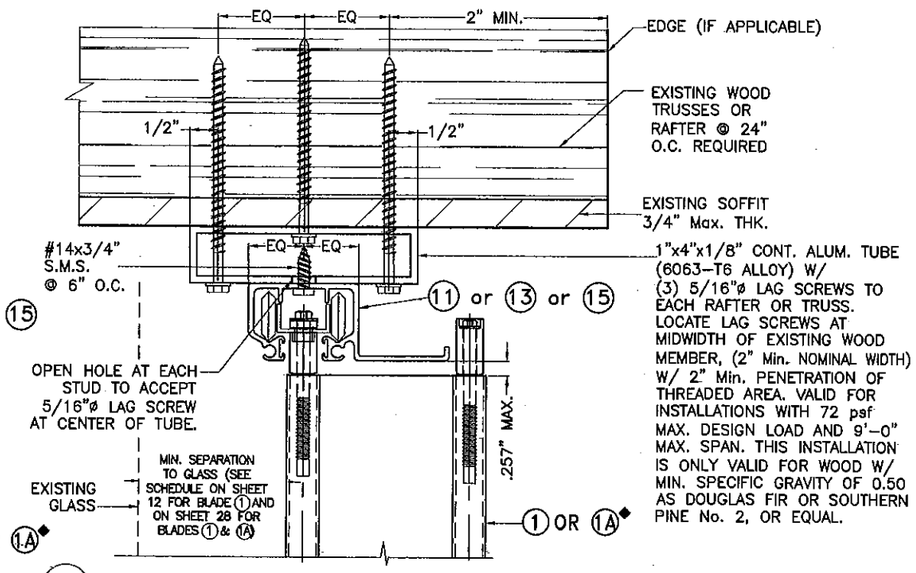

(U) HV CEILING INSTALLATION

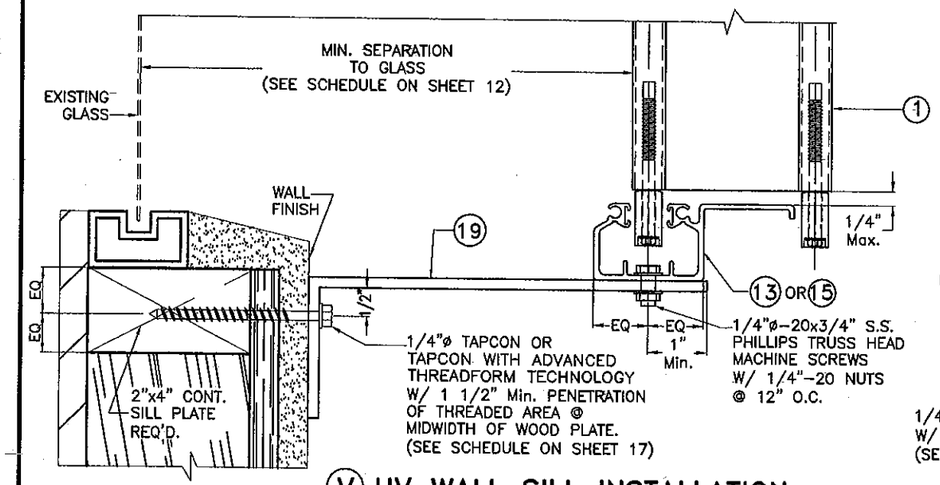

(V) HV WALL SILL INSTALLATION

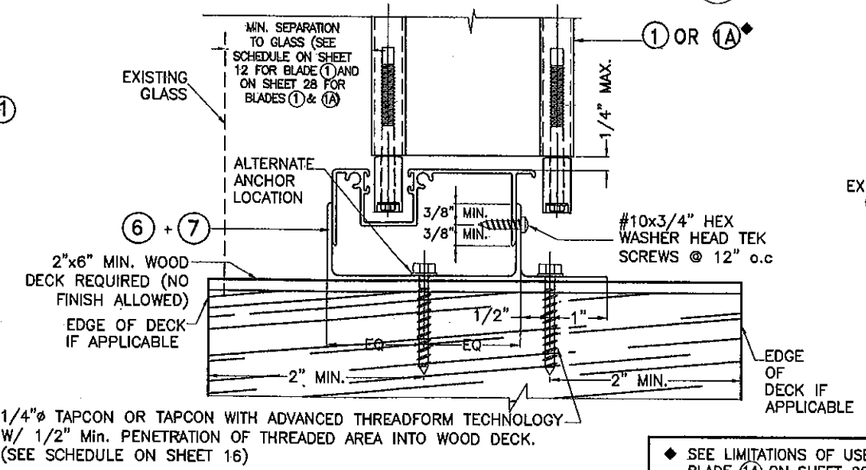

(W) HV FLOOR INSTALLATION

◆ SEE LIMITATIONS OF USE OF BLADE (1A) ON SHEET 28

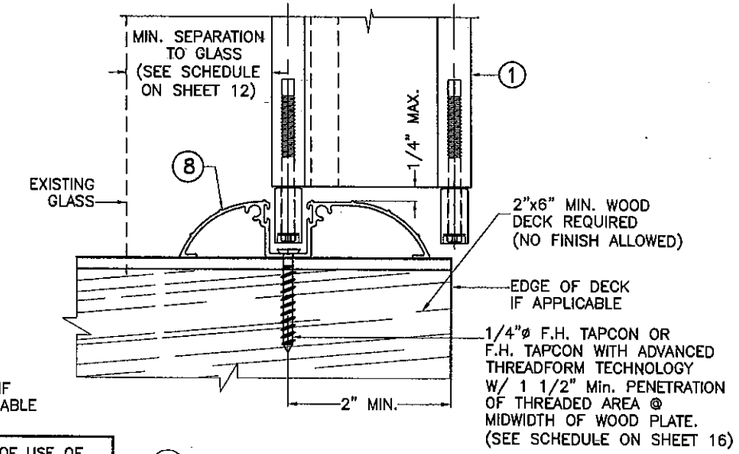

(X) HV WALK–OVER INSTALLATION

FLORIDA BUILDING CODE (High Velocity Hurricane Zone)

PRODUCT REVISED
as complying with the Florida Building Code
Acceptance No 11-0325.02
Expiration Date 03/23/2016
By Helena A. Melon
Miami Dade Product Control

MIAMI–DADE COUNTY

WALTER A. TILLIT JR. LICENSE No. 44167 STATE OF FLORIDA PROFESSIONAL ENGINEER

P.E. SEAL, SIGNATURE, DATE

TILTECO INC.
TILLIT TESTING & ENGINEERING COMPANY
6355 N.W. 36th. St., Ste. 305, VIRGINIA GARDENS, FLORIDA 33166
Phone : (305)871–1530 . Fax : (305)871–1531
e–mail: tilteco@aol.com
EB–00006719
WALTER A. TILLIT Jr. P.E.
FLORIDA Lic. # 44167

PERFECT STORM SHUTTERS, INC.

(ASSA # 388)

12334 SW 131 AVE.
MIAMI, FL 33186
Phone:(305)256–8085, Fax:(305)256–8099

© 2011 EASTERN METAL SUPPLY, INC.

BERTHA HV™
Accordion Shutter System

REV.No	DESCRIPTION	DATE	DRAWN BY: M.C.V.
1	OLD DWG: 05–381	03/24/11	DATE: 03/24/11
2			DRAWING No 11–030
3			
4			
5			SHEET 19 OF 28
6			

END INSTALLATIONS (1) HV & (1A) HV◆ BLADES INTO 2"x4" MIN. WOOD STUDS.

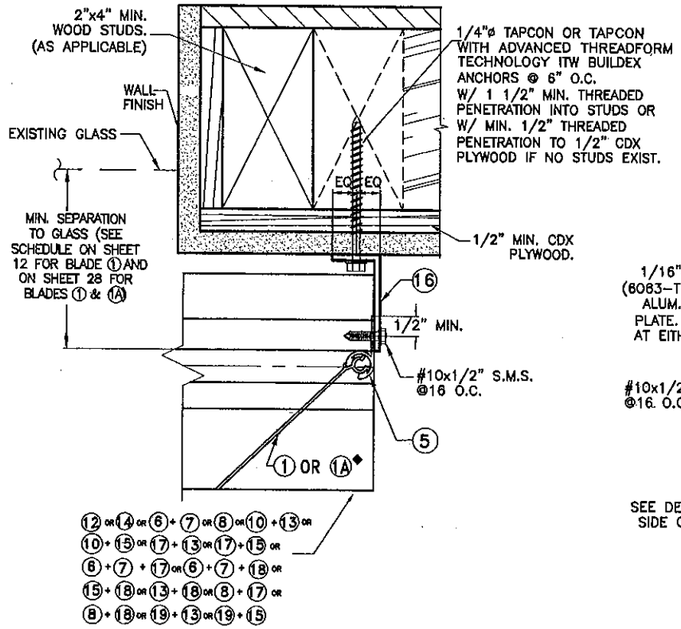

END CONNECTION DETAIL (7)

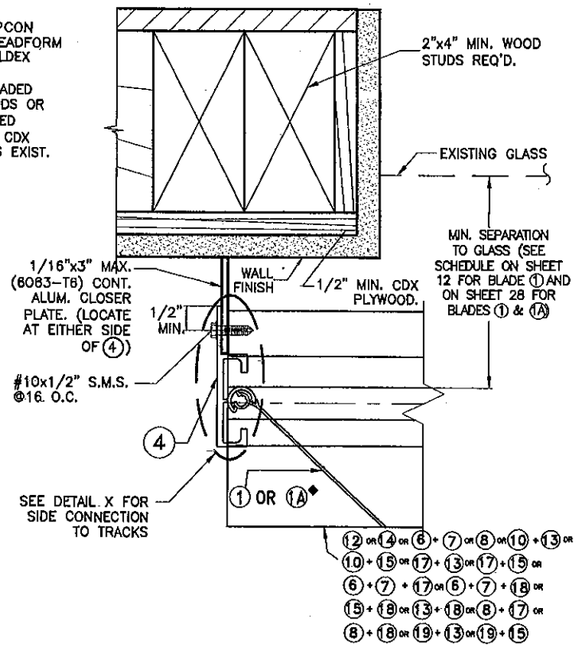

END CONNECTION DETAIL (8)

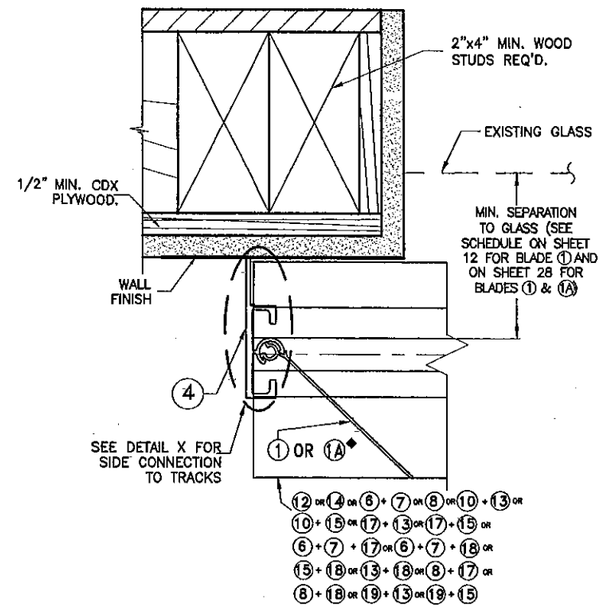

END CONNECTION DETAIL (9)

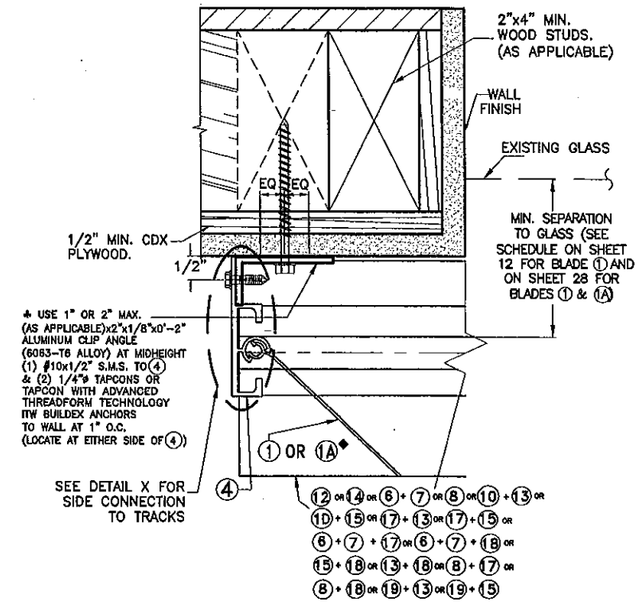

END CONNECTION DETAIL (10)

◆ REQUIRED ONLY FOR SPANS GREATER THAN 12'-0"

◆ SEE LIMITATIONS OF USE OF BLADE (1A) ON SHEET 28

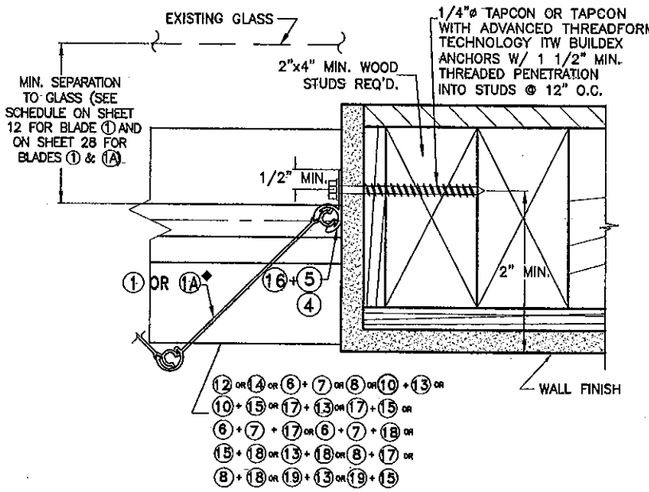

END CONNECTION DETAIL (11)

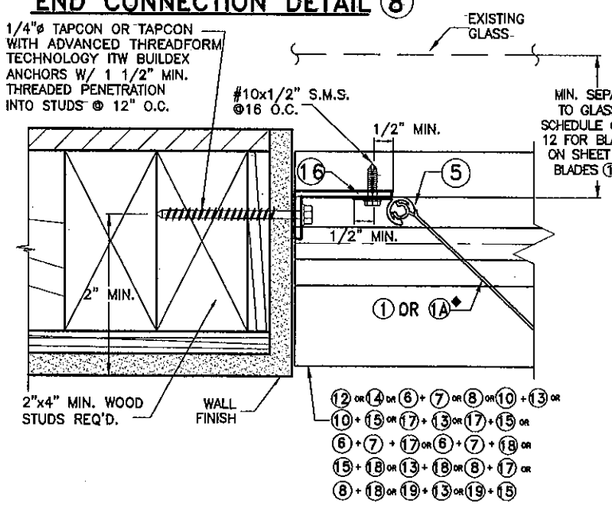

END CONNECTION DETAIL (12)

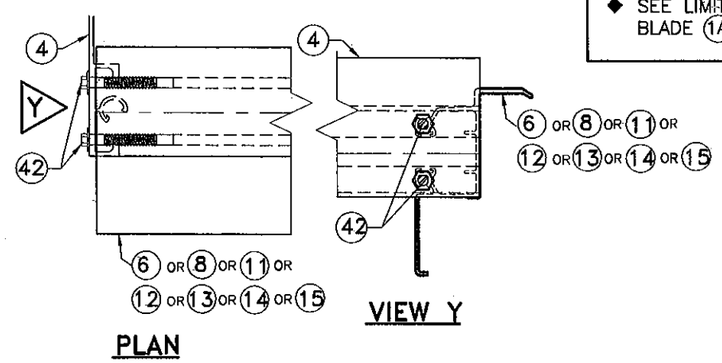

DETAIL X

FLORIDA BUILDING CODE (High Velocity Hurricane Zone)

PRODUCT REVISED
as complying with the Florida Building Code
Acceptance No 11-0325.02
Expiration Date 03/23/2016
By Helen A. Klein
Miami Dade Product Control

MIAMI-DADE COUNTY

WALTER A. TILLIT JR. LICENSE No. 44167 STATE OF FLORIDA PROFESSIONAL ENGINEER

P.E. SEAL/SIGNATURE/DATE

TILTECO INC.

TILLIT TESTING & ENGINEERING COMPANY
6355 N.W. 36th. St., Ste. 305, VIRGINIA GARDENS, FLORIDA 33166
Phone : (305)871-1530 . Fax : (305)871-1531
e-mail: tilteco@aol.com
EB-0006719
WALTER A. TILLIT Jr. P.E.
FLORIDA Lic. # 44167

PERFECT STORM SHUTTERS, INC.

(ASSA # 388)

12334 SW 131 AVE.
MIAMI, FL 33186
Phone:(305)256-8085, Fax:(305)256-8099

© 2011 EASTERN METAL SUPPLY, INC.

BERTHA HV™
Accordion Shutter System

REV.No	DESCRIPTION	DATE
1	OLD DWG: 05-381	03/24/11
2		
3		
4		
5		
6		

DRAWN BY: M.C.V.
DATE: 03/24/11
DRAWING No 11-030
SHEET 20 OF 28

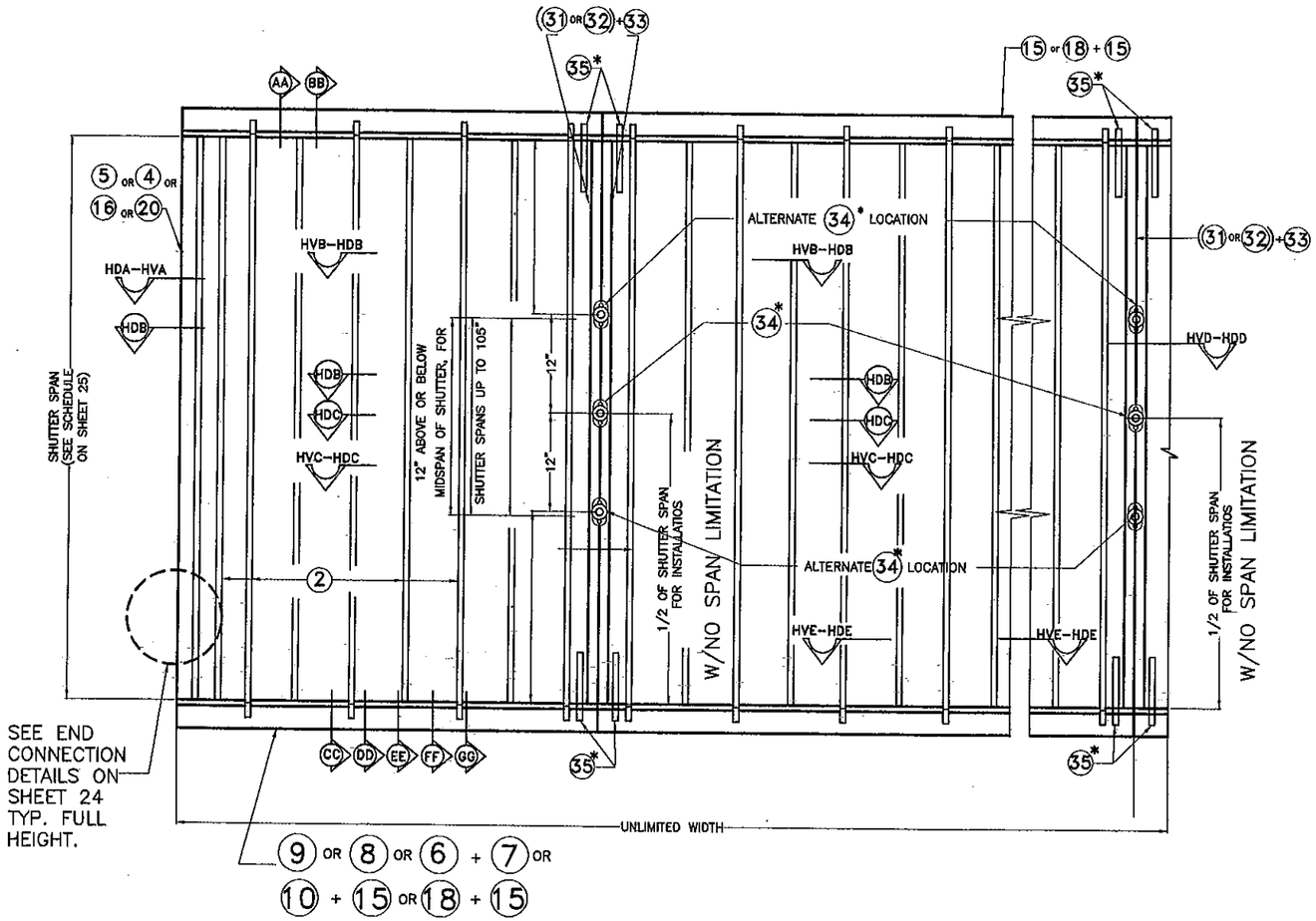

TYPICAL (2) HV BLADE SHUTTER ELEVATION

N.T.S.

* NOTES ON HD LOCKS AND CENTERMATES:

1. **MANDATORY CONDITION # 1:** ONE (34) H.D. LOCK SHALL BE USED FOR ANY SPAN AND INSTALLATION AT HEAVY DUTY SYMMETRICAL CENTERMATES, ((31) OR (32))+(33) AND AT ANY ELEVATION. (34) H.D. LOCK MAY BE USED AS AN INSIDE OR OUTSIDE LOCK, ATTACHED TO (33) HEAVY DUTY SYMMETRICAL CENTERMATES WITH (3) #8 x 3/8" LONG FLAT HEAD S.S. M.S. LOCKING RODS (35) ARE NOT MANDATORY, i.e. THEY ARE COMPLETELY OPTIONAL.

2. **MANDATORY CONDITION # 2:** LOCATION OF (34) H.D. LOCK SHALL BE AS INDICATED ON SHUTTER ELEVATION, i.e., FOR SHUTTER SPANS UP TO 105". (34) H.D. LOCK MAY BE INSTALLED AT MID HEIGHT OF SHUTTER OR AT 12" ABOVE OR BELOW MID HEIGHT OF SHUTTER. FOR SHUTTER SPANS GREATER THAN 105", (34) H.D. LOCK SHALL BE INSTALLED AT MID HEIGHT OF SHUTTER.

FLORIDA BUILDING CODE (High Velocity Hurricane Zone)

PRODUCT REVISED
as complying with the Florida Building Code
Acceptance No 11-0325.02
Expiration Date 03/23/2016
By
Miami Dade Product Control

MIAMI-DADE COUNTY

WALTER A. TILLIT JR. LICENSE No. 44167 STATE OF FLORIDA PROFESSIONAL ENGINEER

P.E. SEAL/SIGNATURE/DATE

TILTECO INC.

TILLIT TESTING & ENGINEERING COMPANY
6355 N.W. 36th. St., Ste. 305, VIRGINIA GARDENS, FLORIDA 33166
Phone : (305)871-1530 . Fax : (305)871-1531
e-mail: tilteco@aol.com
EB-0006719
WALTER A. TILLIT Jr. P.E.
FLORIDA Lic. # 44167

PERFECT STORM SHUTTERS, INC.

(ASSA # 388)

12334 SW 131 AVE.
MIAMI, FL 33186
Phone:(305)256-8085, Fax:(305)256-8099

© 2011 EASTERN METAL SUPPLY, INC.

BERTHA HV™
Accordion Shutter System

REV.No	DESCRIPTION	DATE	DRAWN BY: M.C.V.
1	OLD DWG: 05-381	03/24/11	DATE: 03/24/11
2			DRAWING No
3			11-030
4			
5			SHEET
6			21 OF 28

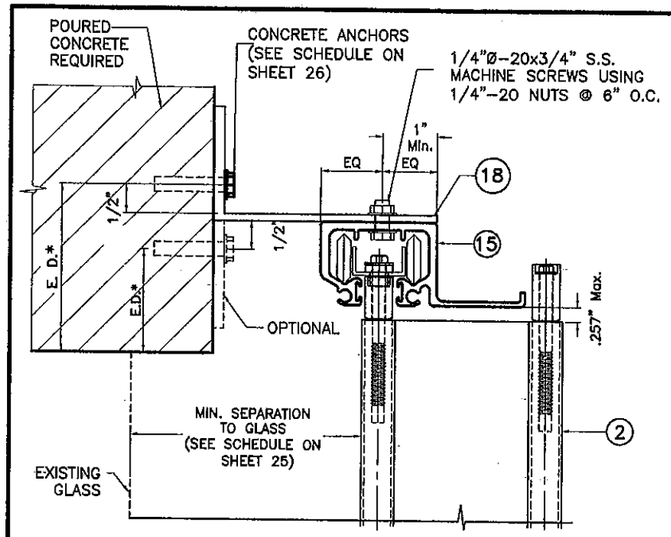

AA HD WALL HEADER INSTALLATION

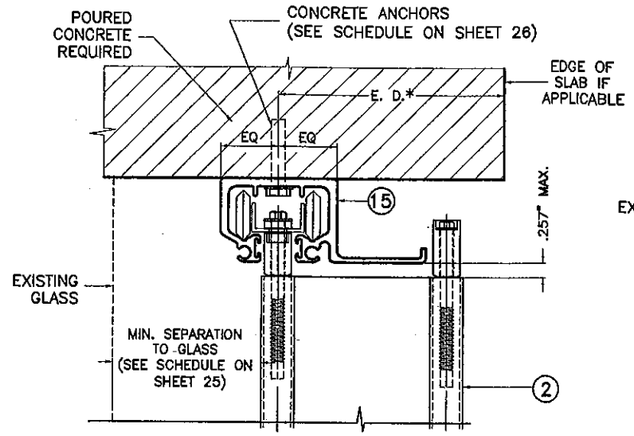

BB HD CEILING INSTALLATION

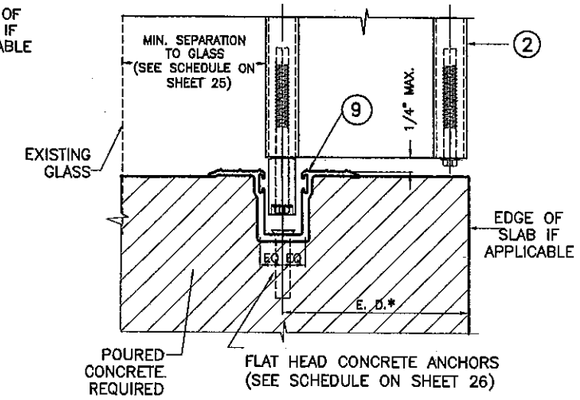

CC HD TRENCH INSTALLATION

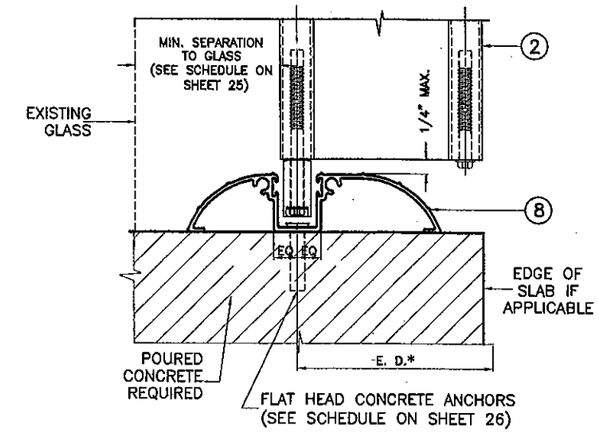

DD HD WALK-OVER INSTALLATION

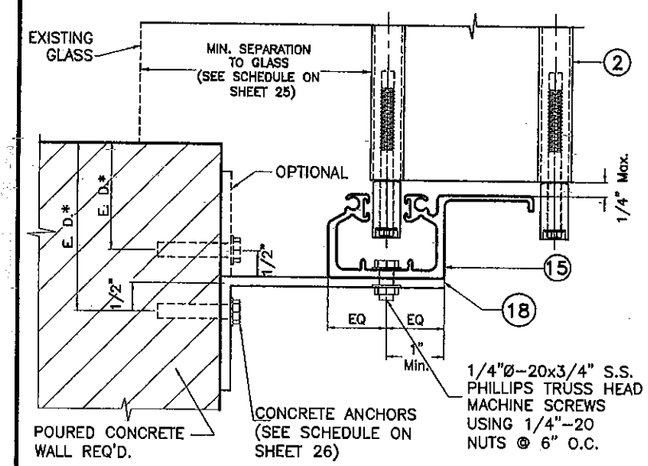

EE HD WALL SILL INSTALLATION

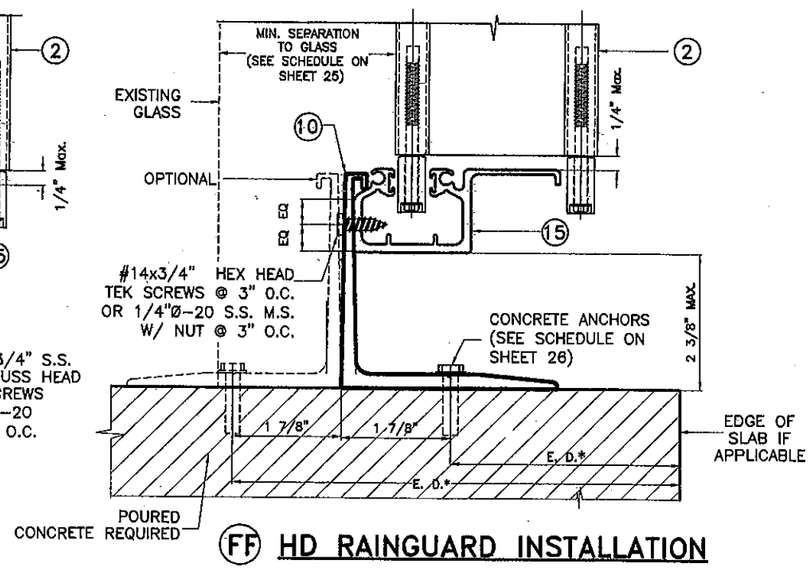

FF HD RAINGUARD INSTALLATION

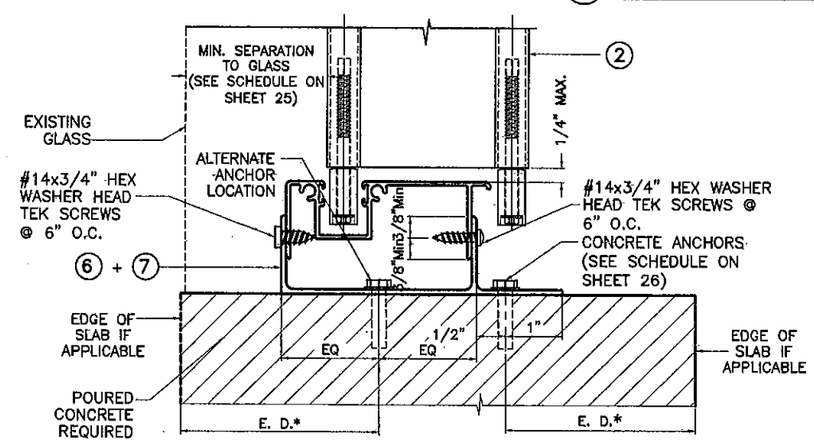

GG HD FLOOR INSTALLATION

NOTE FOR COMBINATION OF SECTIONS:

1– SEE SHEET 21 FOR TYPICAL SHUTTER ASSEMBLY.
2– MOUNTING SECTIONS CAN BE COMBINED IN ANY WAY TO SUIT ANY INSTALLATION.

* E. D. = EDGE DISTANCE. (SEE SPECIFICATIONS ON SHEET 26)

INSTALLATION DETAILS W/ 2 HV BLADE

SCALE: 3/8"=1"

FLORIDA BUILDING CODE (High Velocity Hurricane Zone)

PRODUCT REVISED
as complying with the Florida Building Code
Acceptance No 11-0325.02
Expiration Date 03/23/2016
By Miami Dade Product Control

MIAMI-DADE COUNTY

WALTER A. TILLIT JR. LICENSE No. 44167 STATE OF FLORIDA PROFESSIONAL ENGINEER

P.E. SEAL/SIGNATURE/DATE

TILTECO INC.
TILLIT TESTING & ENGINEERING COMPANY
6355 N.W. 36th. St., Ste. 305, VIRGINIA GARDENS, FLORIDA 33166
Phone : (305)871-1530 . Fax : (305)871-1531
e-mail: tilteco@aol.com
EB-0006719
WALTER A. TILLIT Jr. P.E.
FLORIDA Lic. # 44167

PERFECT STORM SHUTTERS, INC.
(ASSA # 388)
12334 SW 131 AVE.
MIAMI, FL 33186
Phone:(305)256-8085, Fax:(305)256-8099

© 2011 EASTERN METAL SUPPLY, INC.

BERTHA HV™
Accordion Shutter System

REV.No	DESCRIPTION	DATE	DRAWN BY: M.C.V.
1	OLD DWG: 05-381	03/24/11	DATE: 03/24/11
2			DRAWING No 11-030
3			
4			
5			SHEET 22 OF 28
6			

SEE END WALL CONNECTION DETAILS ON SHEET 24

INSTALLATION
② HV BLADE

* SEE NOTES ON LOCKING RODS (35) & HD (34) LOCKS ON SHEET 21

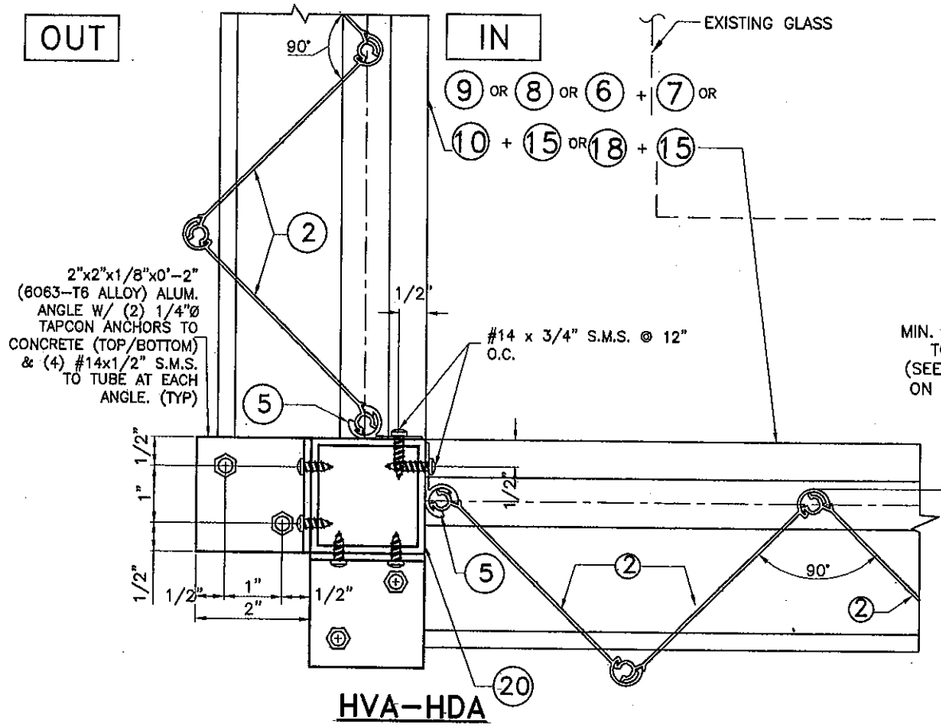

HVA-HDA

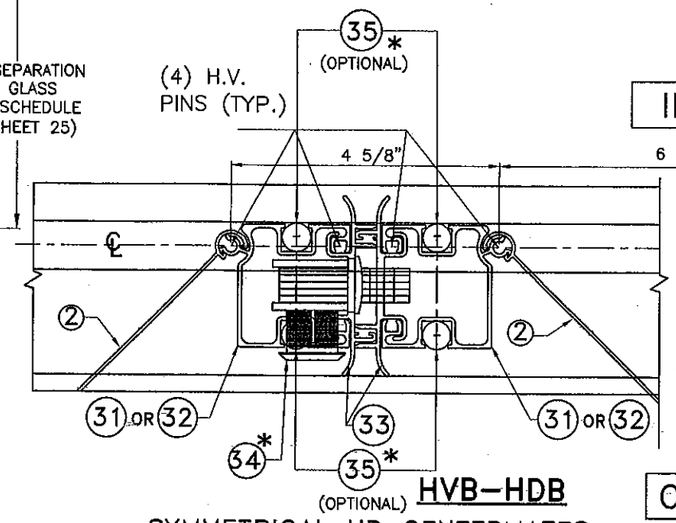

HVB-HDB
SYMMETRICAL HD CENTERMATES W/ (34)* LOCK (EXTERIOR)

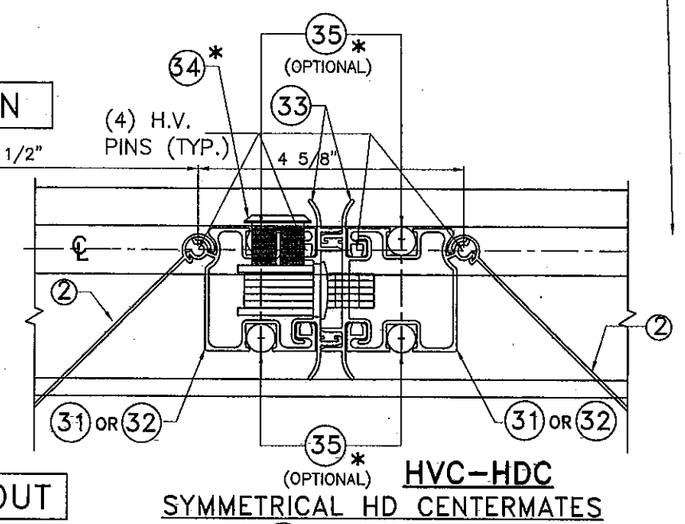

HVC-HDC
SYMMETRICAL HD CENTERMATES W/ (34)* LOCK (INTERIOR)

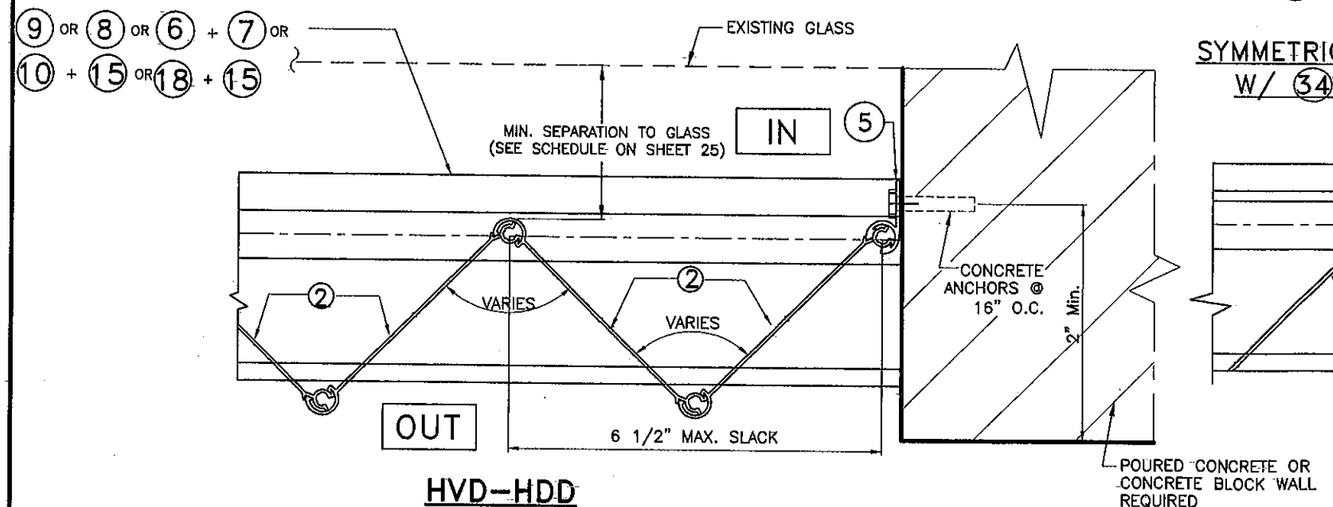

HVD-HDD

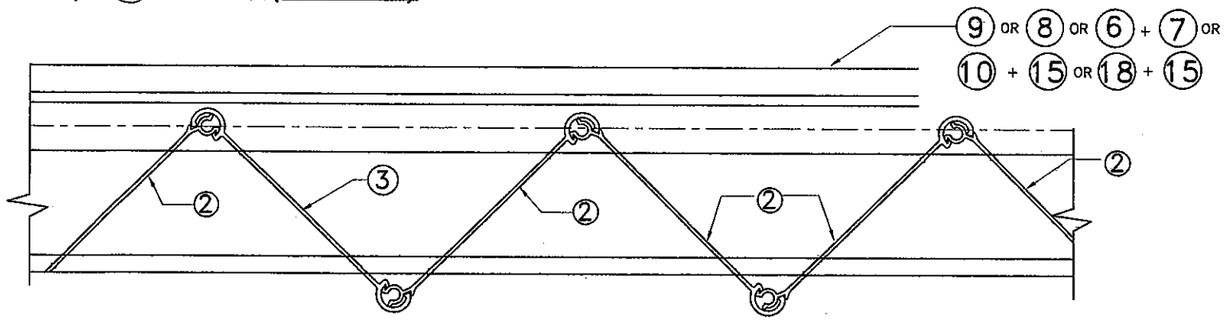

HVE-HDE

FLORIDA BUILDING CODE (High Velocity Hurricane Zone)

PRODUCT REVISED
as complying with the Florida Building Code
Acceptance No 11-0325.02
Expiration Date 03/23/2016
By Miami Dade Product Control

MIAMI-DADE COUNTY

WALTER A. TILLIT JR. LICENSE No 44167 STATE OF FLORIDA PROFESSIONAL ENGINEER

P.E. SEAL/SIGNATURE/DATE

TILTECO INC.
TILLIT TESTING & ENGINEERING COMPANY
6355 N.W. 36th. St., Ste. 305, VIRGINIA GARDENS, FLORIDA 33166
Phone : (305)871-1530 . Fax : (305)871-1531
e-mail: tilteco@aol.com
EB-0006719
WALTER A. TILLIT Jr. P.E.
FLORIDA Lic. # 44167

PERFECT STORM SHUTTERS, INC.

(ASSA # 388)

12334 SW 131 AVE.
MIAMI, FL 33186
Phone:(305)256-8085, Fax:(305)256-8099

© 2011 EASTERN METAL SUPPLY, INC.

BERTHA HV™
Accordion Shutter System

REV.No	DESCRIPTION	DATE	DRAWN BY: M.C.V.
1	OLD DWG: 05-381	03/24/11	DATE: 03/24/11
2			DRAWING No 11-030
3			
4			
5			SHEET 23 OF 28
6			

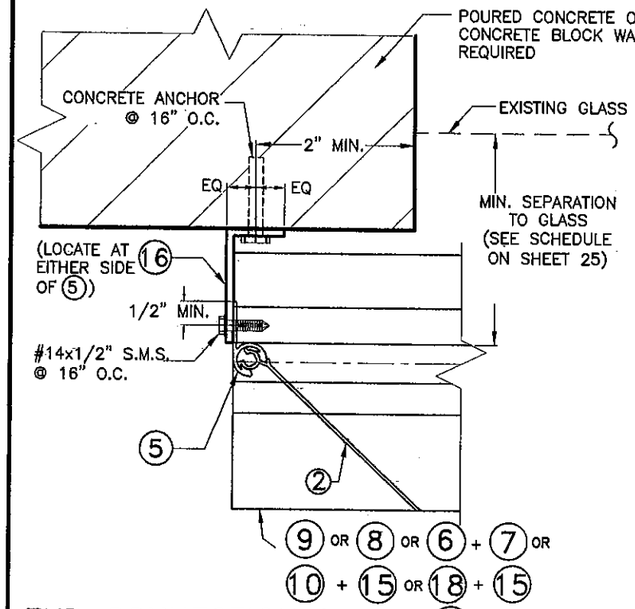

END CONNECTION DETAIL 1

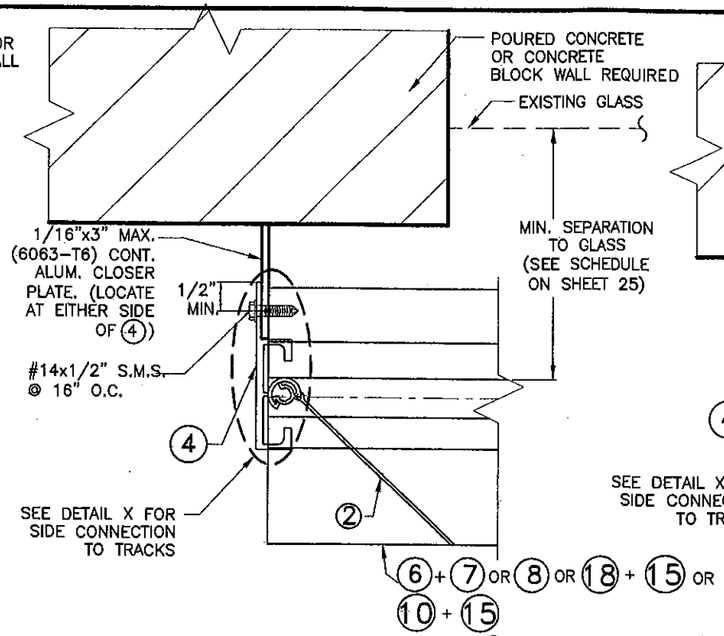

END CONNECTION DETAIL 2

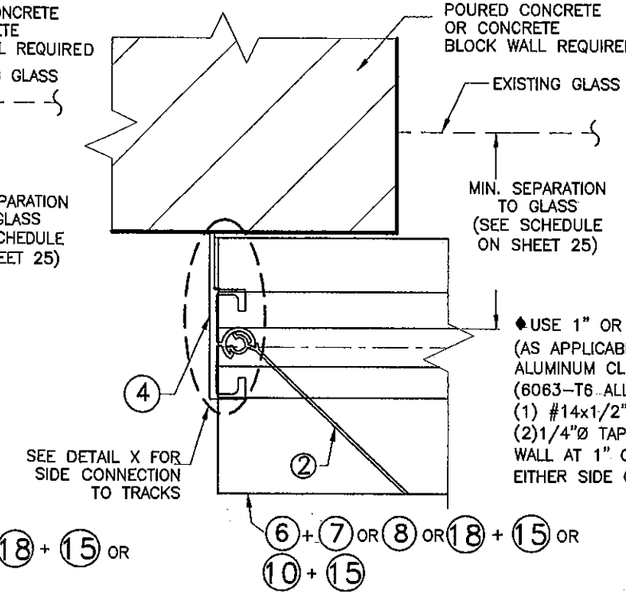

♦USE 1" OR 2" MAX. (AS APPLICABLE)x2"x1/8"x0'-2" ALUMINUM CLIP ANGLE (6063-T6 ALLOY) AT MIDHEIGHT (1) #14x1/2" S.M.S. TO 4 & (2)1/4"Ø TAPCONS ANCHORS TO WALL AT 1" O.C. (LOCATE AT EITHER SIDE OF 4)

END CONNECTION DETAIL 3

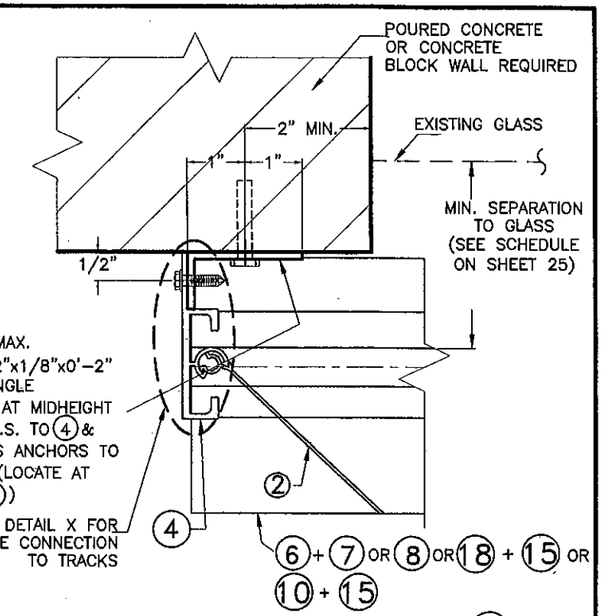

END CONNECTION DETAIL 4

♦ REQUIRED ONLY FOR SPANS GREATER THAN 12'-0"

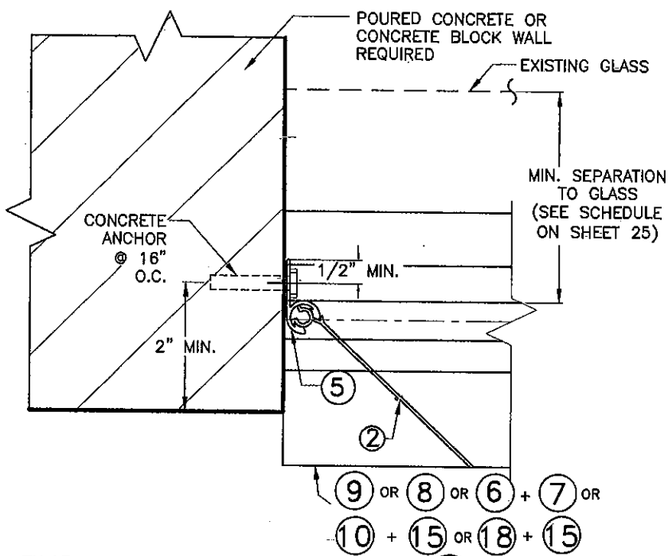

END CONNECTION DETAIL 5

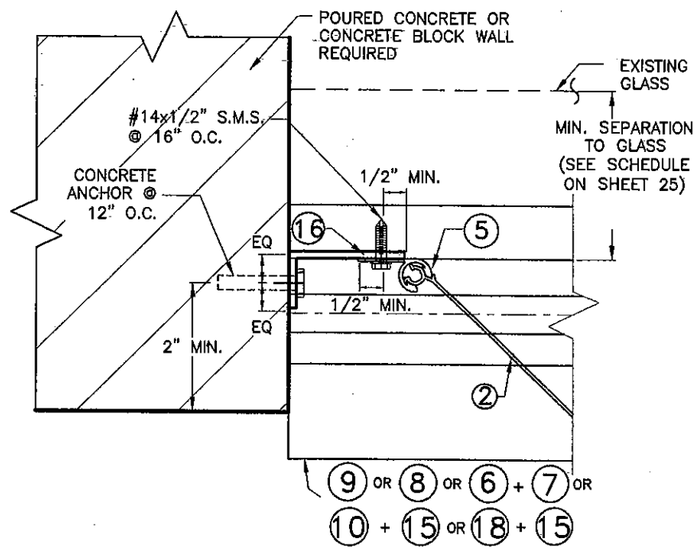

END CONNECTION DETAIL 6

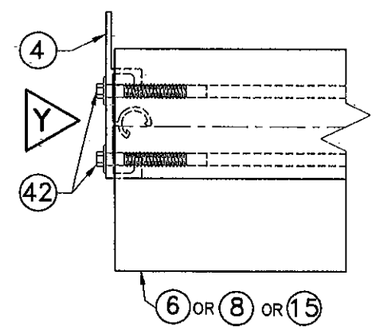

PLAN

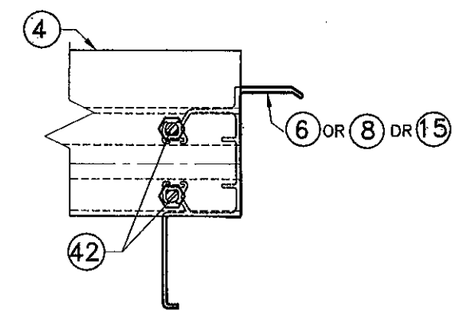

VIEW Y

DETAIL X

END INSTALLATION
2 HV BLADE INTO CONCRETE OR CONCRETE BLOCK WALL.

FLORIDA BUILDING CODE (High Velocity Hurricane Zone)

PRODUCT REVISED
as complying with the Florida Building Code
Acceptance No 11-0325.02
Expiration Date 03/23/2016
By Helena A. Melo
Miami Dade Product Control

MIAMI-DADE COUNTY

WALTER A. TILLIT JR. LICENSE No. 44167 STATE OF FLORIDA PROFESSIONAL ENGINEER

P.E. SEAL/SIGNATURE/DATE

TILTECO INC.
TILLIT TESTING & ENGINEERING COMPANY
6355 N.W. 36th. St., Ste. 305, VIRGINIA GARDENS, FLORIDA 33166
Phone : (305)871-1530 . Fax : (305)871-1531
e-mail: tilteco@aol.com
EB-0006719
WALTER A. TILLIT Jr. P.E.
FLORIDA Lic. # 44167

PERFECT STORM SHUTTERS, INC.

(ASSA # 388)

12334 SW 131 AVE.
MIAMI, FL 33186
Phone:(305)256-8085, Fax:(305)256-8099

© 2011 EASTERN METAL SUPPLY, INC.

BERTHA HV™
Accordion Shutter System

REV.No	DESCRIPTION	DATE	DRAWN BY: M.C.V.
1	OLD DWG: 05-381	03/24/11	DATE: 03/24/11
2			DRAWING No
3			11-030
4			
5			SHEET
6			24 OF 28

MAXIMUM SHUTTER SPAN "L+" OR "L−" (ft.) ✱
INSTALLATIONS W/ SYMMETRICAL HD CENTERMATES (31) OR (32), W/ ONE HD (34) LOCK & NO LOCKING RODS (35) ♦

MAXIMUM DESIGN LOAD (p.s.f.) (+ OR −)	POURED CONCRETE INSTALLATIONS	
	ALL MOUNTING CONDITIONS	
	L + (ft)	L − (ft)
30 OR LESS	15'−5"	18'−0"
35	14'−10"	18'−0"
40	14'−4"	17'−10"
45	13'−11"	17'−6"
50	13'−6"	17'−0"
55	13'−3"	16'−10"
60	12'−11"	16'−2"
65	12'−8"	15'−6"
70	12'−6"	14'−11"
75	12'−3"	14'−5"
80	12'−0"	14'−0"
85	11'−10"	13'−7"
90	11'−6"	13'−2"
95	11'−3"	12'−10"
100	10'−6"	12'−6"
105	10'−0"	12'−2"
110	9'−6"	11'−11"
115	9'−1"	11'−8"
120	8'−9"	11'−5"
125	−	11'−2"
130	−	10'−11"
135	−	10'−9"
140	−	10'−6"
145	−	10'−4"
150	−	10'−2"
155	−	10'−0"
160	−	9'−10"
165	−	9'−9"
170	−	9'−7"
175	−	9'−5"
180	−	9'−4"
185	−	9'−2"
190	−	9'−0"
195	−	8'−9"

✱ NOTES:

(1) L+: MAXIMUM ALLOWABLE SPAN FOR A GIVEN POSITIVE DESIGN LOAD.
L−: MAX. ALLOWABLE SPAN FOR A GIVEN NEGATIVE DESIGN LOAD.

(2) PROCEDURE TO DETERMINE MAXIMUM SPAN FOR WALL MOUNTINGS OR FLOOR/CEILING:

GIVEN A POSITIVE DESIGN LOAD, DETERMINE MAXIMUM SPAN "L+" FROM SCHEDULE.
GIVEN A NEGATIVE DESIGN LOAD, DETERMINE MAXIMUM SPAN "L−" FROM SCHEDULE.

FINAL MAXIMUM ALLOWABLE SPAN IS EQUAL TO THE MINIMUM DETERMINED SPAN BETWEEN "L+" AND "L−".

(3) PROCEDURE TO DETERMINE MAXIMUM SPAN FOR COMBINATIONS IN BETWEEN WALL W/ FLOOR/CEILING MOUNTINGS:

FOR A GIVEN POSITIVE DESIGN LOAD:
DETERMINE:
L_{1+}= MAX. SPAN FOR WALL MOUNTING INSTALLATIONS.
L_{2+}= MAX. SPAN FOR FLOOR/CEILING MOUNTING INSTALLATIONS.

FOR A GIVEN NEGATIVE DESIGN LOAD:
DETERMINE:
L_{1-}= MAX. SPAN FOR WALL MOUNTING INSTALLATIONS.
L_{2-}= MAX. SPAN FOR FLOOR/CEILING MOUNTING INSTALLATIONS.

FINAL MAXIMUM ALLOWABLE SPAN IS EQUAL TO THE MINIMUM BETWEEN "L_{1+}", "L_{2+}", "L_{1-}" AND "L_{2-}"

(4) GO TO ANCHOR SCHEDULE WITH FINAL MAXIMUM ALLOWABLE SPAN AND MAXIMUM DESIGN LOAD TO DETERMINE MAXIMUM ANCHOR SPACING.

♦ SEPARATION TO GLASS REQUIREMENTS

MINIMUM SEPARATION TO GLASS FOR SHUTTERS INSTALLED AT ALL ELEVATIONS OF BUILDING IS 3".

INSTALLATION LEGEND

MOUNTINGS \ SUBSTRATE	POURED CONCRETE (SHEET 22)
WALL MOUNTING	AA & EE
FLOOR/CEILING MOUNTING	BB, CC, DD, FF & GG

(2) HV BLADE ONLY

FLORIDA BUILDING CODE (High Velocity Hurricane Zone)

PRODUCT REVISED
as complying with the Florida Building Code
Acceptance No 11-0325.02
Expiration Date 03/23/2016
By Miami Dade Product Control

MIAMI-DADE COUNTY

WALTER A. TILLIT JR. LICENSE No. 44167 STATE OF FLORIDA PROFESSIONAL ENGINEER

P.E. SEAL / SIGNATURE / DATE

TILTECO INC.
TILLIT TESTING & ENGINEERING COMPANY
6355 N.W. 36th. St., Ste. 305, VIRGINIA GARDENS, FLORIDA 33166
Phone : (305)871-1530 . Fax : (305)871-1531
e-mail: tilteco@aol.com
EB-0006719
WALTER A. TILLIT Jr. P.E.
FLORIDA Lic. # 44167

PERFECT STORM SHUTTERS, INC.

(ASSA # 388)

12334 SW 131 AVE.
MIAMI, FL 33186
Phone:(305)256-8085, Fax:(305)256-8099

© 2011 EASTERN METAL SUPPLY, INC.

BERTHA HV™
Accordion Shutter System

REV.No	DESCRIPTION	DATE
1	OLD DWG: 05-381	03/24/11
2		
3		
4		
5		
6		

DRAWN BY: M.C.V.
DATE: 03/24/11
DRAWING No 11-030
SHEET 25 OF 28

ANCHORS SPACING LEGEND

1/4"ø TAPCON
5/16"ø TAPCON XL

MAXIMUM ANCHOR* SPACING (in.) SCHEDULE FOR A GIVEN MAX. SHUTTER SPAN, MAXIMUM DESIGN LOAD AND A CORRESPONDING MOUNTING TYPE FOR CONCRETE INSTALLATIONS

MAXIMUM SPAN (ft)	POURED CONCRETE				
	ALL MOUNTINGS AA THRU GG (SHEET 22)				
	USE MAXIMUM VALUES BETWEEN POSITVE AND NEGATIVE LOADS				
	50 OR LESS	>50 TO 90	>90 TO 120	>120 TO 160	>160 TO 195
8'–9" OR LESS	8"	4 1/2"	3 1/2"	–	–
	12"	8"	6"	4"	3 3/4"
>8'–9" UP TO 12'–1"	6"	3 1/2"	3" ‡	–	–
	10"	6"	4"	4"	–
>12'–1" UP TO 18'–0"	4"	3 1/2"	–	–	–
	7 1/2"	5 1/2"	4"	–	–

NOTE:

‡ VALID ONLY FOR UP TO 10'–0" SPAN

*SPECIFICATIONS ON ANCHOR REQUIREMENTS: POURED CONCRETE SUBSTRATE

(A) ANCHORS TO WALL SHALL BE AS FOLLOWS:

A.1) TO EXISTING POURED CONCRETE: (Min. f'c = 3192 psi)
– 1/4"Ø TAPCON ANCHORS, AS MANUFACTURED BY I.T.W. BUILDEX.
MINIMUM EMBEDMENT INTO POURED CONCRETE OF TAPCON IS 1 3/4".

A.2) TO EXISTING POURED CONCRETE: (Min. f'c = 2899 psi)
– 5/16"Ø TAPCON XL ANCHORS, AS MANUFACTURED BY I.T.W. BUILDEX.
MINIMUM EMBEDMENT INTO POURED CONCRETE OF 5/16" TAPCON XL ANCHORS IS 2 1/4".

A.3) IN CASE THAT PRECAST STONE, PRECAST CONCRETE PANELS, PAVERS OR ANY VENEER BE FOUND ON THE EXISTING WALL OR FLOOR, ANCHORS SHALL BE LONG ENOUGH TO REACH THE MAIN STRUCTURE BEHIND SAID WALL FINISHES. ANCHORAGE SHALL BE AS INDICATED ON NOTE A.1) ABOVE. FOR INSTALLATIONS ON VINYL SIDING OR EIFS CONSULT THIS ENGINEER.

(B) ANCHORS SHALL BE INSTALLED FOLLOWING ALL OF THE RECOMMENDATIONS AND SPECIFICATIONS OF THE ANCHOR'S MANUFACTURER.

(C) SEE BELOW FOR MINIMUM REQUIRED EDGE DISTANCE FOR ANCHORS.

MINIMUM REQUIRED EDGE DISTANCE FOR ANCHORS

MAXIMUM ANCHOR SPACINGS ARE VALID FOR
3" EDGE DISTANCE FOR 1/4"Ø TAPCON AND
3 5/8" EDGE DISTANCE FOR 5/16"Ø TAPCON XL.

(2) HV BLADE ONLY

FLORIDA BUILDING CODE (High Velocity Hurricane Zone)

PRODUCT REVISED
as complying with the Florida Building Code
Acceptance No 11-0325.02
Expiration Date 03/23/2016
By
Miami Dade Product Control

MIAMI–DADE COUNTY

WALTER A. TILLIT JR. LICENSE No. 44167 STATE OF FLORIDA PROFESSIONAL ENGINEER

P.E. SEAL, SIGNATURE, DATE

TILTECO INC.
TILLIT TESTING & ENGINEERING COMPANY
8355 N.W. 36th. St., Ste. 305, VIRGINIA GARDENS, FLORIDA 33166
Phone : (305)871–1530 . Fax : (305)871–1531
e–mail: tilteco@aol.com
EB–0006719
WALTER A. TILLIT Jr. P.E.
FLORIDA Lic. # 44167

PERFECT STORM SHUTTERS, INC.

(ASSA # 388)

12334 SW 131 AVE.
MIAMI, FL 33186
Phone:(305)256–8085, Fax:(305)256–8099

© 2011 EASTERN METAL SUPPLY, INC.

BERTHA HV™
Accordion Shutter System

REV.No	DESCRIPTION	DATE	DRAWN BY: M.C.V.
1	OLD DWG: 05–381	03/24/11	DATE: 03/24/11
2			DRAWING No 11–030
3			
4			
5			SHEET 26 OF 28
6			

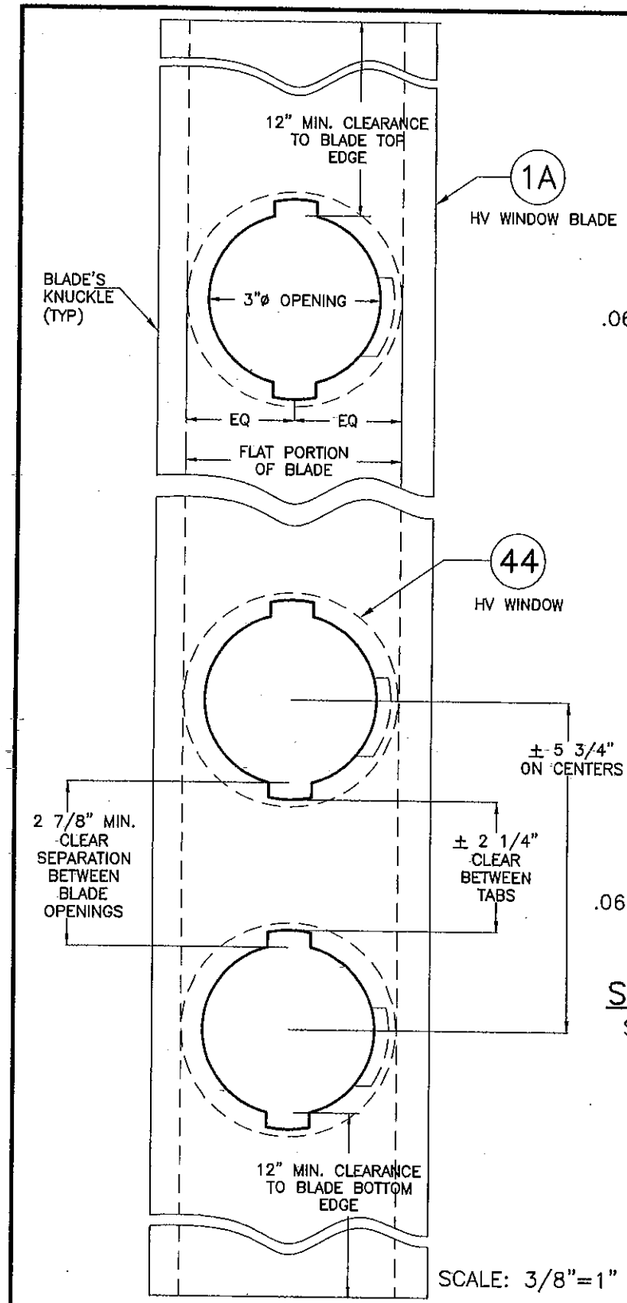

SCALE: 3/8"=1"

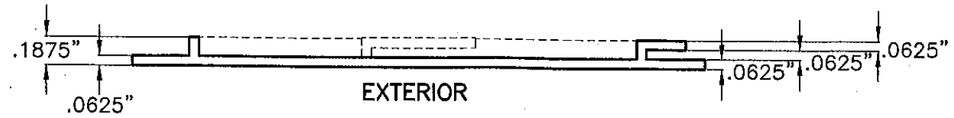

SECTION X–X
SCALE: 1" = 1"

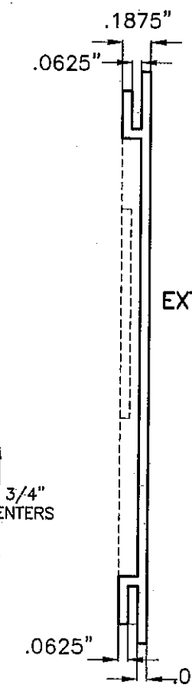

SECTION Y–Y
SCALE: 1" = 1"

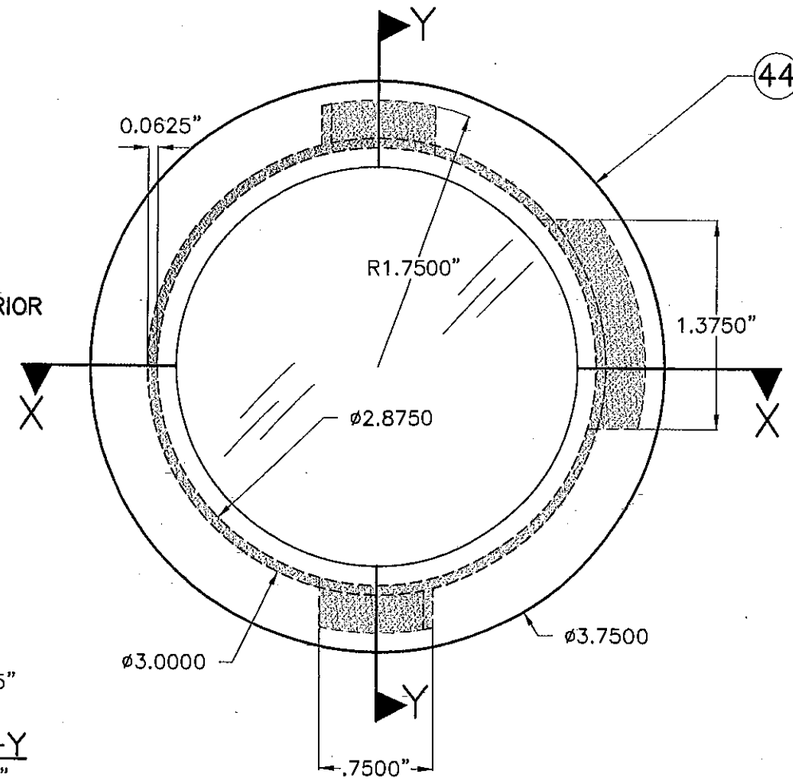

EXTERIOR ELEVATION
SCALE: 1" = 1"

(44) POLYCARBONATE IMPACT RESISTANT HV WINDOW
BAYER MAKROLON 3103 POLYCARBONATE RESINS, UV–STABILIZED GRADE OR SABIC INNOVATIVE PLASTIC LEXAN 103 RESIN (SEE NOTE "F" ON SHEET 28).

POLYCARBONATE SOURCES FOR (44)

TYPICAL PROPERTIES	APPLICABLE STANDARD REFERENCE	RESULT	
		BAYER MATERIAL / SCIENCE LLC.MAKROLON 3103	SABIC INNOVATIVE PLASTIC LEXAN 103 RESIN
PHYSICAL:			
SPECIFIC GRAVITY	ASTM D792	0.043 lb/in³	0.043 lb/in³
MECHANICAL:			
TENSILE YIELD STRENGTH	ASTM D638	9,400 p.s.i.	9,500 p.s.i.
FLEXURAL STRENGTH AT YIELD	ASTM D790	12,500 p.s.i.	13,400 p.s.i.
FLEXURAL MODULUS	ASTM D790	340,000 p.s.i.	345,000 p.s.i.
IMPACT:			
NOTCHED IZOD	ASTM D256	18 FT–lb/in	17 FT–lb/in
FIRE BURNING CHARACTERISTICS:			
SMOKE DENSITY	ASTM D2843	47.2 %	64.5 % MAX
RATE OF BURNING	ASTM D635	C–1 CLASS	C–1 CLASS
SELF IGNITION	ASTM D1929	1040 °F	980 °F
WEATHERING:	ASTM G155		
TENSILE STRENGTH AFTER WEATHERING	ASTM 638	9302 p.s.i.	8840 p.s.i.
TENSILE STRESS BEFORE WEATHERING	ASTM 638	8461 p.s.i.	8880 p.s.i.

TYPICAL HV WINDOW BLADE (1A) AND POLYCARBONATE HV WINDOW DETAIL

FLORIDA BUILDING CODE (High Velocity Hurricane Zone)

PRODUCT REVISED
as complying with the Florida Building Code
Acceptance No 11-0325.02
Expiration Date 03/23/2016
By Miami Dade Product Control

MIAMI–DADE COUNTY

WALTER A. TILLIT JR. LICENSE No. 44167 STATE OF FLORIDA PROFESSIONAL ENGINEER

P.E. SEAL/SIGNATURE/DATE

TILTECO INC.
TILLIT TESTING & ENGINEERING COMPANY
6355 N.W. 36th. St., Ste. 305, VIRGINIA GARDENS, FLORIDA 33166
Phone : (305)871–1530 . Fax : (305)871–1531
e–mail: tilteco@aol.com
EB–0008719
WALTER A. TILLIT Jr. P.E.
FLORIDA Lic. # 44167

PERFECT STORM SHUTTERS, INC.
(ASSA # 388)
12334 SW 131 AVE.
MIAMI, FL 33186
Phone:(305)256–8085, Fax:(305)256–8099

© 2011 EASTERN METAL SUPPLY, INC.

BERTHA HV™
Accordion Shutter System

REV.No	DESCRIPTION	DATE	DRAWN BY: M.C.V.
1	OLD DWG: 05–381	03/24/11	DATE: 03/24/11
2			DRAWING No
3			11–030
4			
5			SHEET
6			27 OF 28

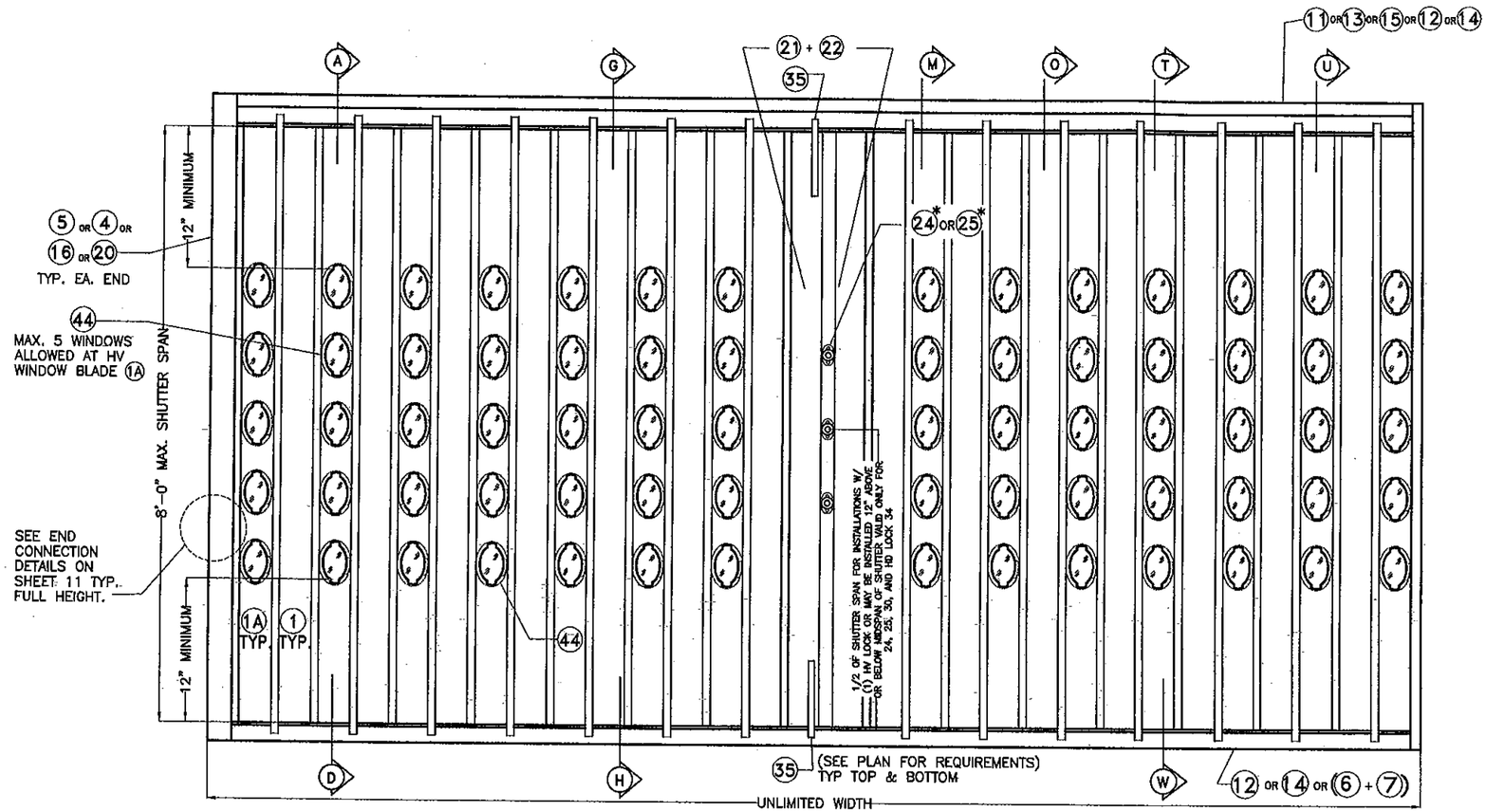

ELEVATION

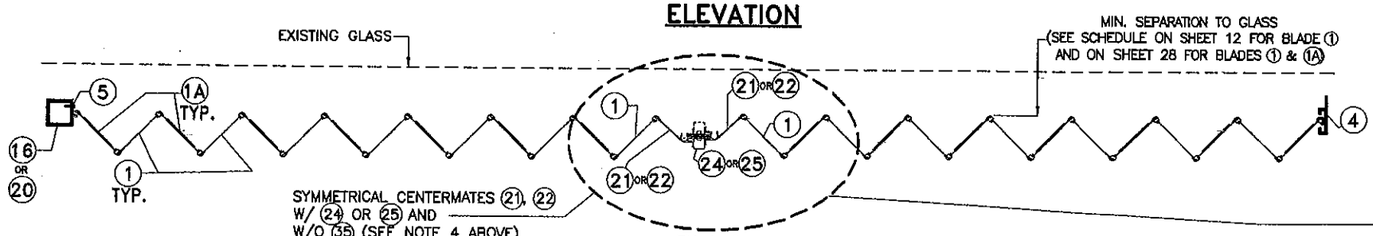

PLAN

TYPICAL 1 HV BLADE WORKING IN UNISON WITH HV WINDOW BLADE 1A SHUTTER*

N.T.S.

ALTERNATE OPPOSING CENTERMATES 21, 22 W/ 35 (EXTERIOR ONLY) AND W/ 24 OR 25 (SEE NOTE 4 ABOVE)

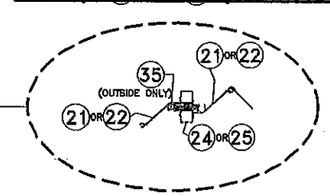

* GENERAL LIMITATIONS AND CONDITIONS OF USE FOR BERTHA 1 HV BLADE ACCORDION SHUTTER SYSTEM WORKING IN UNISON WITH HV WINDOW BLADE 1A

1. MAX. DESIGN PRESSURE RATING: +110, – 110 p.s.f.

2. MAX. SHUTTER SPAN: 96".

3. ALLOWED MOUNTINGS: A, D, G & H ON SHEETS 6, 7; AS WELL AS MOUNTINGS M, O, T, U & W ON SHEETS 18 & 19.

4. ONLY CENTERMATES 21, 22 (BOTH W/ 24 OR 25) ARE ALLOWED WITH 21, 22 ARRANGED IN A SYMMETRICAL OR OPPOSING LAYOUT. IN CASE OF OPPOSING LAYOUT, 35 MUST BE INCLUDED ONLY AT EXTERIOR ACCESS SIDE OF CENTERMATE.

5. (A) HV WINDOW BLADE 1A SHALL ONLY ALLOW A MAXIMUM OF 5 OPENINGS (3"ø HOLES) FOR 44 PER BLADE AT SPACINGS SHOWN ON SHEET 27.

(B) MIN. CLEARANCE FROM TOP OR BOTTOM EDGE OF HV WINDOW BLADE 1A OF ANY 3"ø HOLE FOR 44 SHALL BE 12".

(C) FIRST OR LAST BLADE COMING OUT FROM STARTERS AT ENDS MAY BE HV WINDOW BLADE 1A

(D) HV WINDOW BLADE 1A MUST BE USED ALTERNATE TO A SOLID HV BLADE 1 THROUGHOUT SHUTTER'S WIDTH.

(E) CENTERMATES SHALL ALWAYS BE INSTALLED ADJACENT TO A SOLID HV BLADE 1 AT EITHER SIDE OF THEM.

(F) POLYCARBONATE HV WINDOW 44 SHALL BE INSTALLED SO THAT TABS FACE THE INTERIOR OF THE OPENING BEING PROTECTED. HV WINDOW 44 MUST BE ONLY INSTALLED AND LOCKED USING A HV SETTING TOOL PROVIDED BY ASSA, INC.

6. SEE ANCHOR SPACING SCHEDULE FOR INSTALLATIONS INTO WOOD FRAME BUILDINGS ON SHEET 16, AS LIMITED BY SPAN AND DESIGN LOAD (SEE NOTES 1 & 2 ABOVE).

7. SEE ANCHOR SPACING SCHEDULE FOR INSTALLATIONS INTO POURED CONCRETE OR CONCRETE BLOCK WALL ON SHEETS 13 & 14 AS LIMITED BY SPAN AND DESIGN LOAD (SEE NOTES 1 & 2 ABOVE).

8. MINIMUM SEPARATION TO GLASS SCHEDULE:

SHUTTER SPAN	MINIMUM SEPARATION TO GLASS
96" Max.	5"

FLORIDA BUILDING CODE (High Velocity Hurricane Zone)

PRODUCT REVISED
as complying with the Florida Building Code
Acceptance No 11-0325.02
Expiration Date 03/23/2016
By [signature]
Miami Dade Product Control

MIAMI-DADE COUNTY

WALTER A. TILLIT JR. LICENSE No. 44167 STATE OF FLORIDA PROFESSIONAL ENGINEER
3/24/11

P.E. SEAL SIGNATURE & DATE

TILTECO INC.
TILLIT TESTING & ENGINEERING COMPANY
8355 N.W. 36th. St., Ste. 305, VIRGINIA GARDENS, FLORIDA 33166
Phone : (305)871-1530 . Fax : (305)871-1531
e-mail: tilteco@aol.com
EB-0006719
WALTER A. TILLIT Jr. P.E.
FLORIDA Lic. # 44167

PERFECT STORM SHUTTERS, INC.

(ASSA # 388)

12334 SW 131 AVE.
MIAMI, FL 33186
Phone:(305)256-8085, Fax:(305)256-8099

© 2011 EASTERN METAL SUPPLY, INC.

BERTHA HV™
Accordion Shutter System

REV.No	DESCRIPTION	DATE
1	OLD DWG: 05-381	03/24/11
2		
3		
4		
5		
6		

DRAWN BY: M.C.V.
DATE: 03/24/11

DRAWING No 11-030

SHEET 28 OF 28

INSTALLATIONS W/ (1) HV BLADE & HV CENTERMATES (21) INTO METAL STUD WALLS *

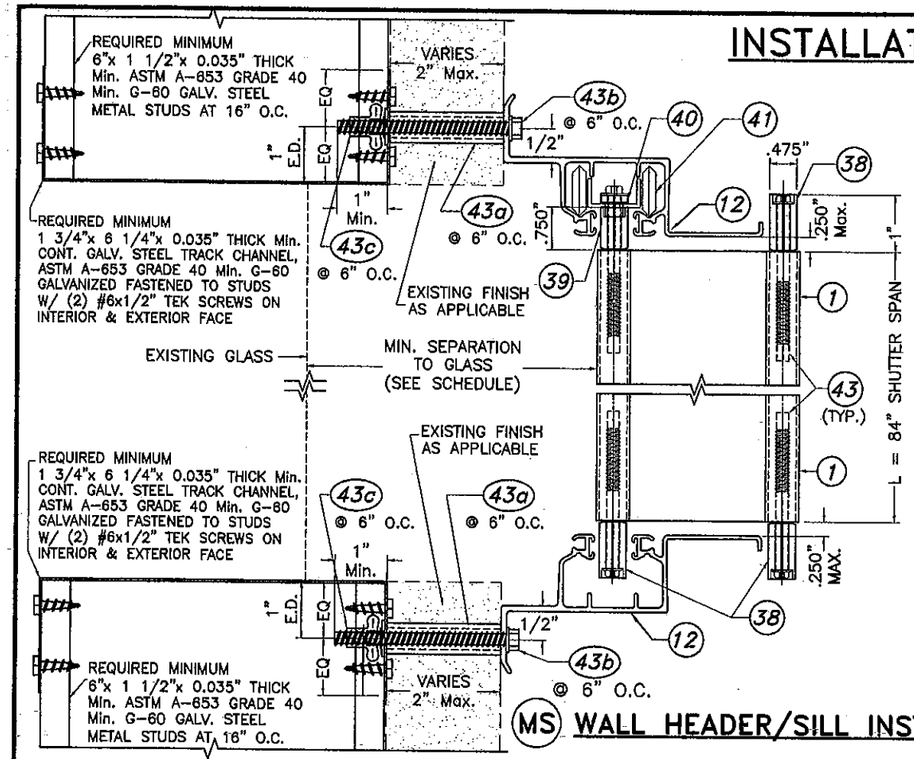

(MS) WALL HEADER/SILL INSTALLATION

* GENERAL LIMITATIONS AND CONDITIONS OF USE FOR BERTHA (1) HV BLADE ACCORDION SHUTTER SYSTEM INSTALLATION TO METAL STUD WALLS

1. MAX. DESIGN PRESSURE RATING: +75, – 75 p.s.f.
2. MAX. SHUTTER SPAN: 84"
3. ALLOWED MOUNTING: (MS) ON THIS SHEET.
4. ONLY CENTERMATE (21) W/ (24) HV LOCK ARE ALLOWED WITH (21) ARRANGED IN A SYMMETRICAL LAYOUT. USE OF (2) (35) (6" LONG, MINIMUM) MUST ALWAYS BE INCLUDED AT EXTERIOR OR INTERIOR ACCESS SIDE OF CENTERMATE.

** BLADE SLACK DETAIL HVF IS VALID FOR CENTERMATE (21) APPLICATION WITH BLADE (1)

SEPARATION TO GLASS SCHEDULE

MAX. SHUTTER SPAN L (in)	MINIMUM SEPARATION TO GLASS
84" OR LESS	3 1/4"

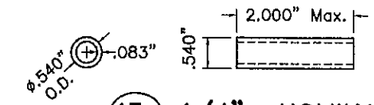

(43a) 1/4"ø NOMINAL ALUMINUM SLEEVE
6063-T5 ALLOY

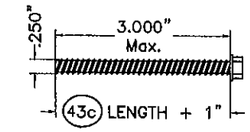

(43b) 1/4"ø-20X3" BOLT
MUST PENETRATE (43c) 1"

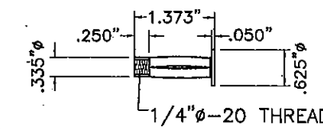

(43c) 1/4"ø ELCO CONSTRUCTION PRODUCTS FAB-LOK HD

COMPONENTS

SCALE: 3/8"= 1"

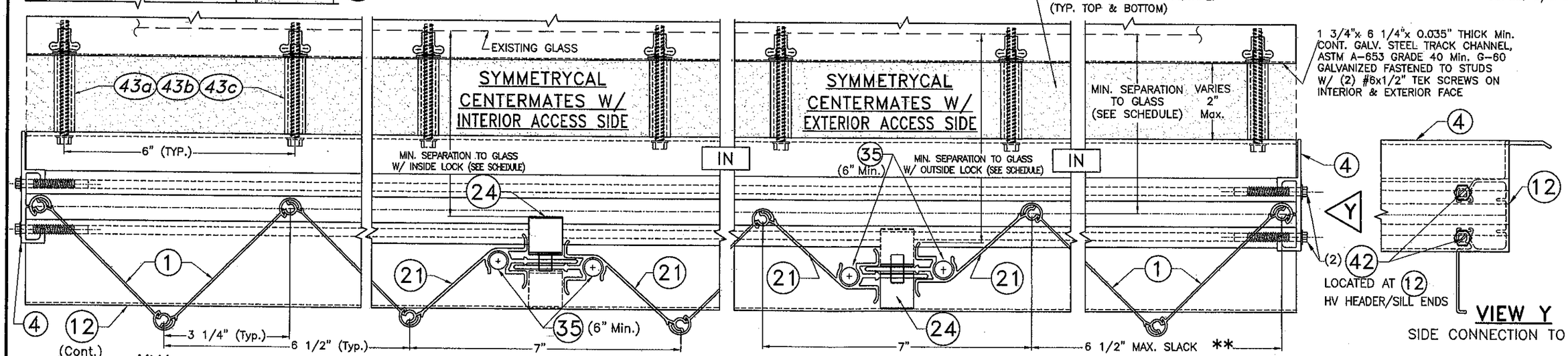

FLORIDA BUILDING CODE (High Velocity Hurricane Zone)

PRODUCT REVISED
as complying with the Florida Building Code
Acceptance No 11-0325.02
Expiration Date 03/23/2016
By
Miami Dade Product Control

MIAMI-DADE COUNTY

WALTER A. TILLIT JR. LICENSE No. 44167 STATE OF FLORIDA PROFESSIONAL ENGINEER

P.E. SEAL/SIGNATURE/DATE

TILTECO INC.
TILLIT TESTING & ENGINEERING COMPANY
8355 N.W. 36th. St., Ste. 305, VIRGINIA GARDENS, FLORIDA 33166
Phone : (305)871-1530 . Fax : (305)871-1531
e-mail: tilteco@aol.com
EB-0006719
WALTER A. TILLIT Jr. P.E.
FLORIDA Lic. # 44167

PERFECT STORM SHUTTERS, INC.

(ASSA # 388)

12334 SW 131 AVE.
MIAMI, FL 33186
Phone:(305)256-8085, Fax:(305)256-8099

© 2011 EASTERN METAL SUPPLY, INC.

BERTHA HV™
Accordion Shutter System

REV.No	DESCRIPTION	DATE	DRAWN BY: M.C.V.
1	OLD DWG: 05-381	03/24/11	DATE: 03/24/11
2			DRAWING No 11-030
3			
4			
5			SHEET 28A OF 28
6			