MIAMI-DADE COUNTY
BUILDING AND NEIGHBORHOOD COMPLIANCE DEPARTMENT (BNC)
BOARD AND CODE ADMINISTRATION DIVISION

MIAMI-DADE COUNTY
PRODUCT CONTROL SECTION
11805 SW 26 Street, Room 208
Miami, Florida 33175-2474
T (786) 315-2590 F (786) 315-2599
www.miamidade.gov/building/home/asp

NOTICE OF ACCEPTANCE (NOA)

Stanley Security Solutions Inc.
6161 East 75th Street
Indianapolis, IN 46250

SCOPE:

This NOA is being issued under the applicable rules and regulations governing the use of construction materials. The documentation submitted has been reviewed and accepted by Miami-Dade County BNC -Product Control Section to be used in Miami Dade County and other areas where allowed by the Authority Having Jurisdiction (AHJ).

This NOA shall not be valid after the expiration date stated below. The Miami-Dade County Product Control Section (In Miami Dade County) and/or the AHJ (in areas other than Miami Dade County) reserve the right to have this product or material tested for quality assurance purposes. If this product or material fails to perform in the accepted manner, the manufacturer will incur the expense of such testing and the AHJ may immediately revoke, modify, or suspend the use of such product or material within their jurisdiction. BNC reserves the right to revoke this acceptance, if it is determined by Miami-Dade County Product Control Section that this product or material fails to meet the requirements of the applicable building code.

This product is approved as described herein, and has been designed to comply with the Florida Building Code, including the High Velocity Hurricane Zone.

DESCRIPTION: QDB Series Deadbolts w/ QCL & QTL Leverset Locking Hardware-Component Approval

APPROVAL DOCUMENT: Drawing No. **11-01**, titled "K2 Commercial Locking Hardware-Component Approval", sheets 1 through 16 of 16, prepared by AL-Farooq Corporation, dated 02/22/11 and last revised on August 10, 2011, signed and sealed by Javad Ahmad, P.E., bearing the Miami-Dade County Product Control Approval stamp with the Notice of Acceptance number and approval date by the Miami-Dade County Product Control Section.

MISSILE IMPACT RATING: Large and Small Missile Impact Resistant

Limitations: 1. The locking component is approved to be used as an equal alternate in approved outswing single steel doors (48"W X 96"H max panel), having current NOA. Lower design of door or the component shall control.

2. Two (2) single doors with current qualified mullion NOA may be used, as long as the Dead bolts+ leverset engaged into opposite panel. The opposite panel containing Stanley QED Rim panic exit having current NOA must engage into the mullion. Lowest design pressure of the doors or the locking component or panic exit component or mullion NOA(s) shall control.
3. This locking devices are consist of QDB series Deadbolts plus QCL or QTL leversets.
4. Electrical device installation is not part of this approval, such installation to be reviewed by AHJ.

LABELING: Each unit shall bear a permanent label with the manufacturer's name or logo, Chiayi, Taiwan and Series and following statement: "Miami-Dade County Product Control Approved", unless otherwise noted herein.

RENEWAL of this NOA shall be considered after a renewal application has been filed and there has been no change in the applicable building code negatively affecting the performance of this product.

TERMINATION of this NOA will occur after the expiration date or if there has been a revision or change in the materials, use, and/or manufacture of the product or process. Misuse of this NOA as an endorsement of any product, for sales, advertising or any other purposes shall automatically terminate this NOA. Failure to comply with any section of this NOA shall be cause for termination and removal of NOA.

ADVERTISEMENT: The NOA number preceded by the words Miami-Dade County, Florida, and followed by the expiration date may be displayed in advertising literature. If any portion of the NOA is displayed, then it shall be done in its entirety.

INSPECTION: A copy of this entire NOA shall be provided to the user by the manufacturer or its distributors and shall be available for inspection at the job site at the request of the Building Official.

This NOA consists of this page 1 and evidence pages E-1, as well as approval document mentioned above.

The submitted documentation was reviewed by **Ishaq I. Chanda, P.E.**

MIAMI-DADE COUNTY APPROVED

8/11/11

NOTICE OF ACCEPTANCE: EVIDENCE SUBMITTED

A. DRAWINGS

1. Manufacturer's parts drawings and sections.
2. Drawing No. **11-01**, titled "K2 Commercial Locking Hardware-Component Approval", sheets 1 through 16 of 16, prepared by AL-Farooq Corporation, dated 02/22/11 and last revised on August 10, 2011, signed and sealed by Javad Ahmad, P.E.

B. TESTS

1. Test reports on: 1) Air Infiltration Test, per FBC, TAS 202-94
   2) Uniform Static Air Pressure Test, Loading per FBC TAS 202-94
   3) Water Resistance Test, per FBC, TAS 202-94
   4) Large Missile Impact Test per FBC, TAS 201-94
   5) Cyclic Wind Pressure Loading per FBC, TAS 203-94
   6) Forced Entry Test, per FBC 2411 3.2.1, TAS 202-94

   along with marked-up drawings and installation diagram of single steel doors w/ K2 locking hardware, prepared by Fenestration Testing lab, Inc., Test Report No. **FTL-6325**, dated 12/11/10, signed and sealed by Jorge A. Causo, P. E.
   (Note: This test report has been revised by addendum letters dated 05/26/11, 06/03/11 and August 10, 2011 along w/ verified marked-up Dwg of Rim exit & locking hardware w/ removable mullion, issued by Fenestration Testing Lab, all signed and sealed by Marlin D. Brinson, P.E.)

C. CALCULATIONS

1. Anchor verification calculations and mullion structural analysis, complying with FBC-2007, prepared by Al Farooq Corporation, dated 03/22/11 and last revised on Aug 03, 2011, signed and sealed by Javad Ahmad, P.E.

D. QUALITY ASSURANCE

1. Miami Dade Building and Neighborhood Compliance Department (BNC).

E. MATERIAL CERTIFICATIONS

1. None.

F. STATEMENTS

1. Statement letter of conformance and letter of no financial interest, prepared by Al Farooq Corporation, dated 08/10/11, signed and sealed by Javad Ahmad, P.E.
2. Statement letter dated June 17th, 2011, issued by Stanley Blacker & Decker Inc., certifying on behalf of company that Stanley Security Solutions Inc. is wholly own subsidiary of the company, signed by assistant secretary , Katy P. Sherer.
3. Distributor agreement dated May 11, 2011 between Stanley Security Solutions Inc., USA and Tonglong Metal Industry Co. Inc, Taiwan, signed by Brent A. Flaharty and Lin Tsung Lieh, respectively on behalf of their company.
4. Statement of lab compliance, as part of test reports, along with addendum letters & marked-up Dwg referenced above.

G. OTHER

1. Test proposal # **10-0199 R**, dated 08-24-10 approved by BCCO.

Ishaq I. Chanda

Ishaq I. Chanda, P.E.
Product Control Examiner
NOA No 11-0325.04
Expiration Date: August 18, 2016
Approval Date: August 18, 2011

STANLEY SECURITY SOLUTIONS
K2 Commercial Locking Hardware
QDB SERIES DEADBOLTS WITH QCL & QTL SERIES LEVERSET
(Component Approval)

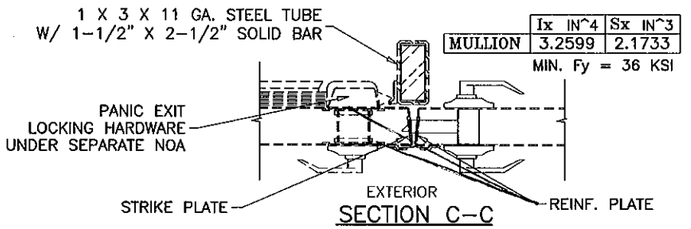

	Ix IN^4	Sx IN^3
MULLION	3.2599	2.1733

MIN. Fy = 36 KSI

SECTION C–C

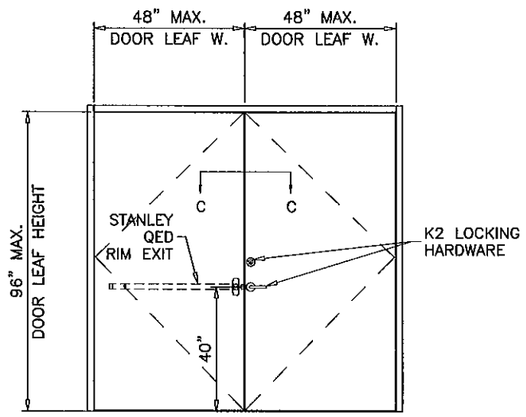

(2) SINGLE STEEL DOOR WITH INTERMEDIATE MULLION

UNDER SEPARATE APPROVAL

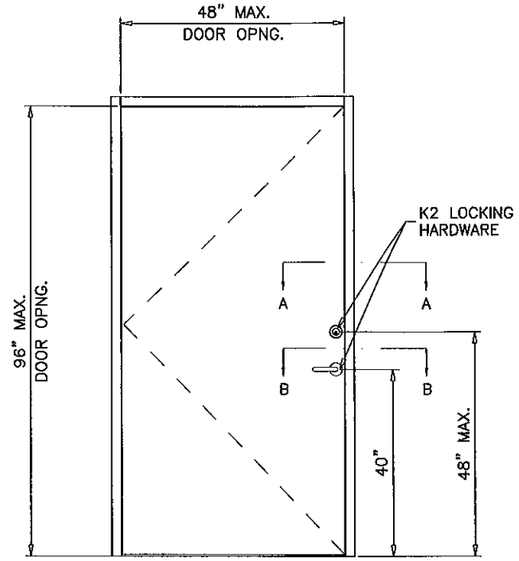

SINGLE STEEL DOOR

UNDER SEPARATE APPROVAL

COMBINATION OF LEVER/DEADBOLTS LOCKS WITH STANLEY SECURITY PANIC EXIT DEVICES, SEE SEPARATE CURRENT NOA(S) FOR EXIT DEVICE AND MULLION CPACITY AND INSTALLATION.
LOWER DESIGN PRESSURE RATINGS FROM DOOR OR LOCKING HARDWARE OR MULLION NOA(S) SHALL APPLY.

Approved as complying with the Florida Building Code
Date: AUG 18, 2011
NOA# 11-0325.04
Miami Dade Product Control
By Ishaq I. Chanda

SEE APPROVED DOOR CURRENT NOA FOR DOOR CONSTRUCTION, DESIGN LOAD RATING AND INSTALLATION DETAILS

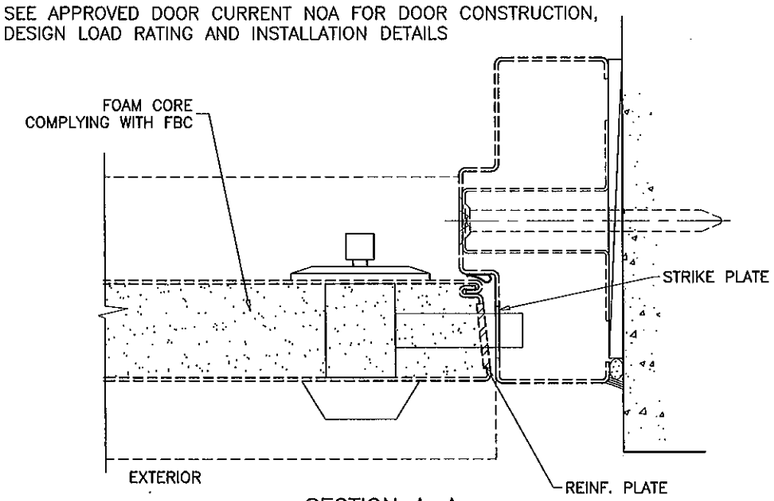

SECTION A–A

QDB SERIES 100/200 DEADBOLTS

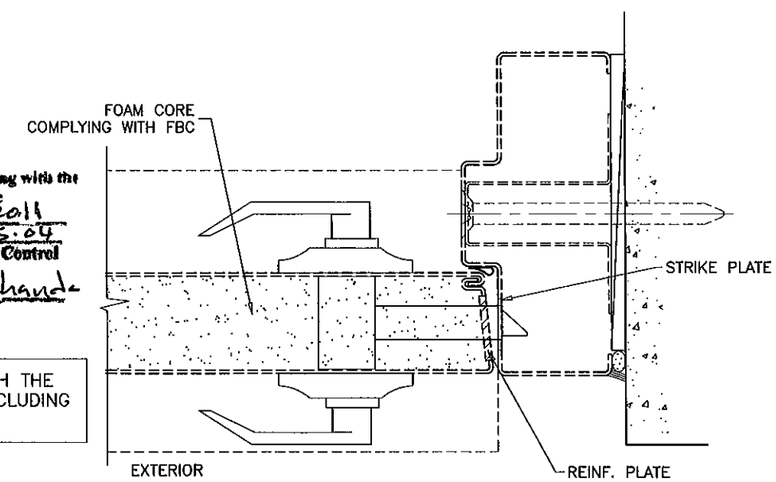

SECTION B–B

QCL SERIES 100/200 OR QTL SERIES 200 LEVERSET

THIS PRODUCT HAS BEEN DESIGNED AND TESTED TO COMPLY WITH THE REQUIREMENTS OF THE FLORIDA BUILDING CODE 2007 EDITION INCLUDING HIGH VELOCITY HURRICANE ZONE (HVHZ).

LIMITATIONS:

1. LOCKING HARDWARE COMPONENT IS APPROVED TO BE USED AS EQUAL ALTERNATIVE IN SINGLE STEEL OUTSWING DOORS HOLDING CURRENT NOA. LOWEST DESIGN PRESSURE RATING FROM DOOR OR LOCK COMPONENT NOA WILL APPLY.
2. DOOR PANEL FACE SHEETS TO BE MIN. 18 GA. (.045" MIN.) STEEL OR BETTER. FRAME JAMBS/STRIKE PLATE TO BE MIN. 16 GA. (.057" MIN.) STEEL OR BETTER. LOCK REINFORCEMENT PLATE TO BE MIN. 12 GA. STEEL OR BETTER. MULLION TO BE MIN. 11GA. (.120" MIN.) STEEL OR BETTER UNDER SEPARATE NOA. PANEL SIZES NO TO EXCEED 48" WIDTH & 96" HEIGHTS.
3. ELECTRICAL/ELECTRONIC FUNCTION AND INSTALLATION OTHER THAN SELF CONTAINED ELECTRONIC DEVICE IS NOT PART OF THIS APPROVAL, AND SUCH INSTALLATION MUST BE REVIEWED BY CORRESPONDING BUILDING AUTHORITY.
4. EGRESS COMPLIANCE TO BE REVIEWED BY BUILDING OFFICIAL.
5. LOCKING HARDWARE SHALL BE INSTALLED AS PER MANUF'S INSTALLATION INSTRUCTIONS.

INDEX OF DRAWING

SHEET NO.	DESCRIPTION
1	GENERAL NOTES
2 THRU 4	QDB 100 SERIES GRADE 1 AUXILIARY DEADBOLTS
5 THRU 7	QDB 200 SERIES GRADE 2 AUXILIARY DEADBOLTS
8 THRU 10	QCL 100 SERIES GRADE 1 CYLINDRICAL LEVERSETS
11 THRU 13	QCL 200 SERIES GRADE 2 CYLINDRICAL LEVERSETS
14 THRU 16	QTL 200 SERIES GRADE 2 TUBULAR LEVERSETS

Engr: JAVAD AHMAD
CIVIL
FLA. PE # 70592
C.A.N. 3538
AUG 10 2011

AL-FAROOQ CORPORATION
ENGINEERS & PRODUCT DEVELOPMENT
1235 S.W. 87 AVE
MIAMI, FLORIDA 33174
TEL. (305) 264-8100 FAX. (305) 262-6978

LOCKS\11-01BD

K2 COMMERCIAL LOCKING HARDWARE COMPONENT APPROVAL

STANLEY SECURITY SOLUTIONS INC.
6161 E 75TH STREET
INDIANAPOLIS, IN, 46250
TEL (800) 392-5209 FAX. (317) 806-3557

revisions:

no	date	by	description
A	05.05.11		REV. PER BNC COMMENTS
B	07.22.11		REV. PER BNC COMMENTS

date: 02-22-11
scale: 3/8" = 1"
dr. by: HAMID
chk. by:

drawing no.
11-01

NO	Component	Spec	Qty	Remark
1	Key	CU	2	K2
2	Single cylinder		1	
3	Outside rose maunting	brass forged	1	
4	Anti-pry	ZAMAK3	1	
5	Anti-Pry screw	steel	2	
6	Latch		1	
7	Circular external rings	Ø9.7x12.6 0.4t	2	
8	Circular external rings	0.3t Ø14.5	1	
9	Inside rose hourting	steel	1	
10	Inside rose plate	CU. SUS 0.4t	1	
11	One way screw	10B21 #12-24 L=68	2	
12	Turn button	ZAMAK3	1	
13	#8 X 1-1/4" FH SCREWS		2	
14	Strike plate	SUS 2.0t	1	
15	#8 X 3" FH SMS		2	
16	Strike plate cover	S45C3.0 heat-treatment	1	HRC30-35°
17	Dust box	POM	1	

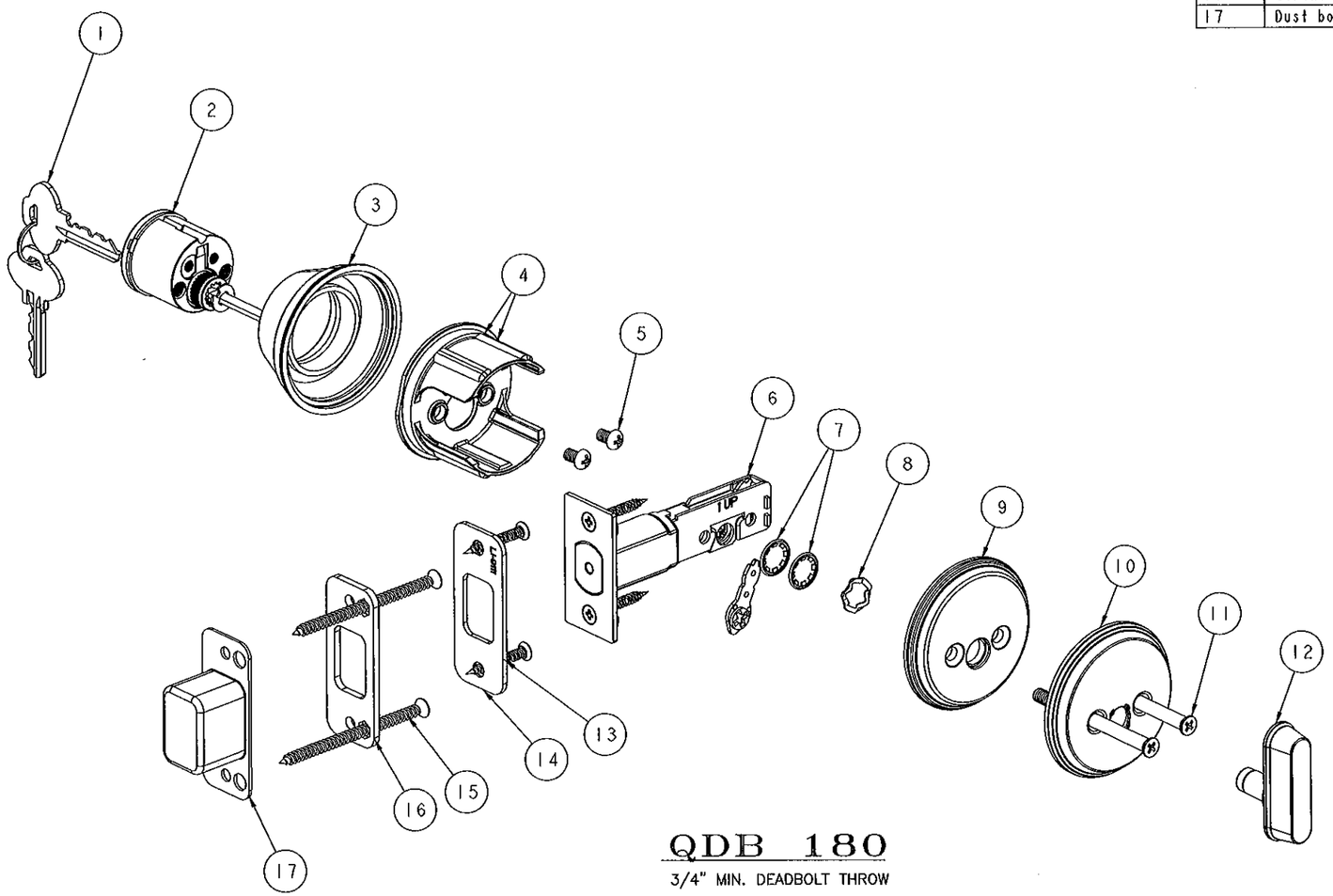

QDB 180

3/4" MIN. DEADBOLT THROW

Approved as complying with the Florida Building Code
Date 8/18/11
NOAC 11-0325.04
Miami-Dade Product Control
By Ishaq I. Chanda

QDB 100 SERIES AUXILIARY DEADBOLTS TO BE USED WITH QCL SERIES 100/200 OR QTL SERIES 200 LEVERSET		
MAX. DESIGN PRESSURE RATING–PSF (48" WIDE X 96" HIGH SINGLE LEAF DOORS)		
HARDWARE MODEL	EXT. (+)	INT. (–)
QDB 180 (SHOWN) QDB 181 QDB 182 QDB 183	75.0	75.0

Engr: JAVAD AHMAD
CIVIL
FLA. PE # 70592
C.A.N. 3538

AUG 16 2011

AL-FAROOQ CORPORATION
ENGINEERS & PRODUCT DEVELOPMENT
1235 S.W. 87 AVE
MIAMI, FLORIDA 33174
TEL. (305) 264-8100 FAX. (305) 262-6978

LOCKS\11-01BD

K2 COMMERCIAL LOCKING HARDWARE COMPONENT APPROVAL

STANLEY SECURITY SOLUTIONS INC.
6161 E 75TH STREET
INDIANAPOLIS, IN, 46250
TEL. (800) 392-5209 FAX. (317) 806-3557

revisions:

no	date	by	description
A	05.05.11		REV. PER BNC COMMENTS
B	07.22.11		NO CHANGE THIS SHEET

date: 02-22-11
scale: –
dr. by: HAMID
chk. by:

drawing no. 11–01

NO	Component	Spec	Qty	Remark
1	Key	CU	3	K2
2	Single cylinder		1	
3	Outside rose maunting	brass forged	1	
4	Anti-pry	ZAMAK3	1	
5	Anti-Pry screw	steel	2	
6	Latch		1	
7	Circular external rings	spring steel Ø15.4	2	
8	Circular external rings	spring steel 0.3t Ø14.5	1	
9	Inside rose hourting	steel	1	
10	Inside rose plate	cu. sus 0.4t	1	
11	One way screw	35ACR #12-24 L=68	2	
12	Turn button	ZAMAK3	1	
13	#8 X 1-1/4" FH SCREWS		2	
14	Strike plate	SUS 2.0t	1	
15	#8 X 3" FH SMS		2	
16	Strike plate cover	S45C3.0 heat-treatment	1	HRC30-35°
17	Dust box	POM	1	

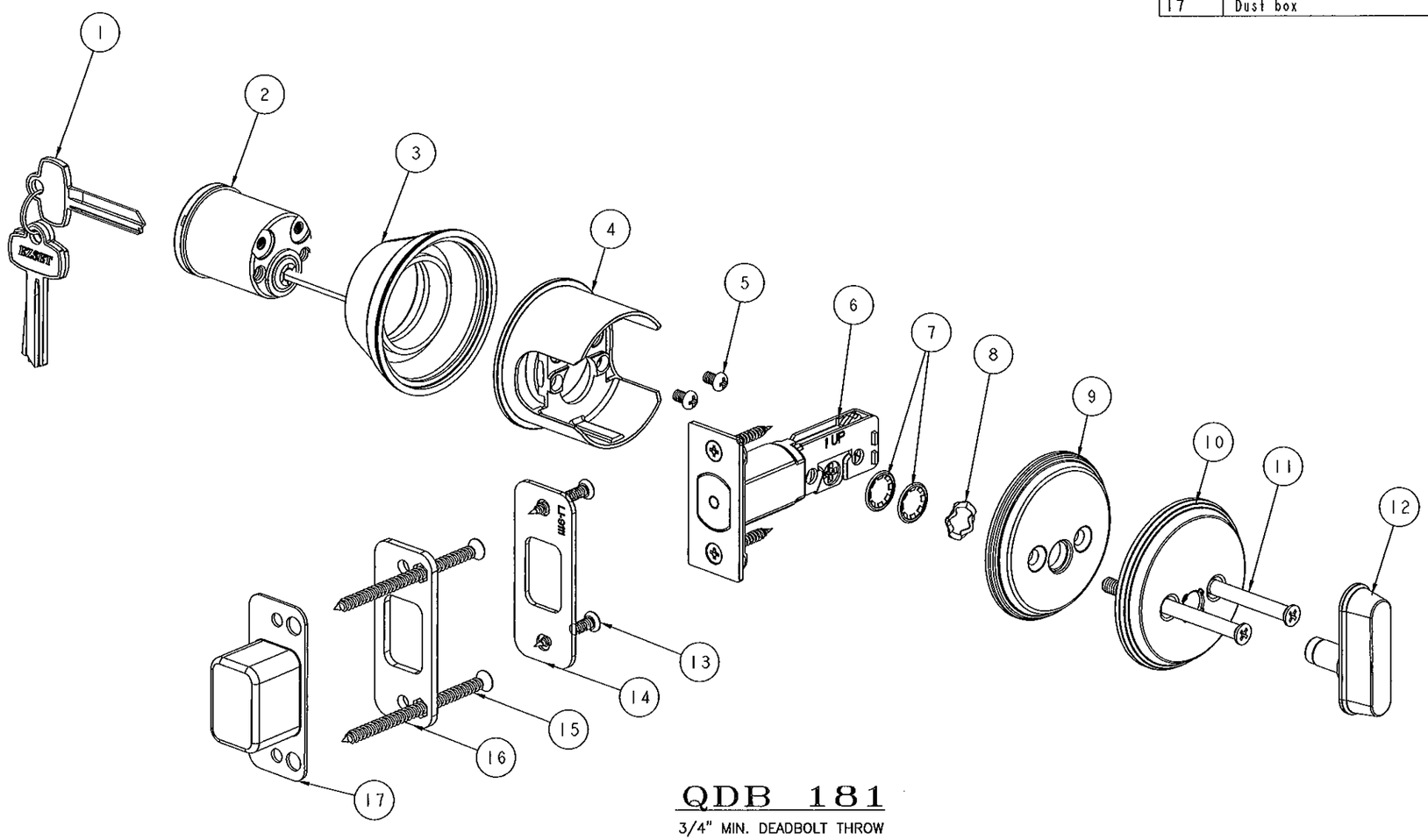

QDB 181

3/4" MIN. DEADBOLT THROW

Approved as complying with the Florida Building Code
Date 8/18/11
NOA# 11-0325.04
Miami Dade Product Control
By Ishaq I. Chanda

QDB 100 SERIES AUXILIARY DEADBOLTS

TO BE USED WITH
QCL SERIES 100/200 OR QTL SERIES 200 LEVERSET

MAX. DESIGN PRESSURE RATING–PSF

(48" WIDE X 96" HIGH SINGLE LEAF DOORS)

HARDWARE MODEL	EXT. (+)	INT. (–)
QDB 180 QDB 181 (SHOWN) QDB 182, QDB 183	75.0	75.0

Engr: JAVAD AHMAD
CIVIL
FLA. PE # 70592,
C.A.N. 3538

AUG 10 2011

AL-FAROOQ CORPORATION
ENGINEERS & PRODUCT DEVELOPMENT
1235 S.W. 87 AVE
MIAMI, FLORIDA 33174
TEL. (305) 264-8100 FAX. (305) 262-6978

LOCKS\11-01BD

K2 COMMERCIAL LOCKING HARDWARE COMPONENT APPROVAL

STANLEY SECURITY SOLUTIONS INC.
6161 E 75TH STREET
INDIANAPOLIS, IN, 46250
TEL. (800) 392-5209 FAX. (317) 806-3557

revisions:

no	date	by	description
A	05.05.11		REV. PER BNC COMMENTS
B	07.22.11		NO CHANGE THIS SHEET

date: 02-22-11
scale: –
dr. by: HAMID
chk. by:

drawing no.
11-01

sheet 3 of 16

NO	Component	Spec	Qty	Remark
1	key		2	K2
2	Double outsidr cylinder		1	
3	Outside rose mounting	brass forged	2	
4	Anti-pry	ZAMAK	1	
5	Anti-Pry screw	steel	3	
6	Latch		1	
7	washer	SPCC 1.2t	1	
8	Double inside cylinder		1	
9	Double installation screw	35ACR 12*24 L=83	2	
10	#8 X 1-1/4" FH SCREWS		2	
11	Strike plate	SUS 2.0t	1	
12	Strike plate cover	S45C3.0t heat-treatment	1	HRC30-35°
13	#8 X 3" FH SMS		2	
14	Strike box	POM	1	

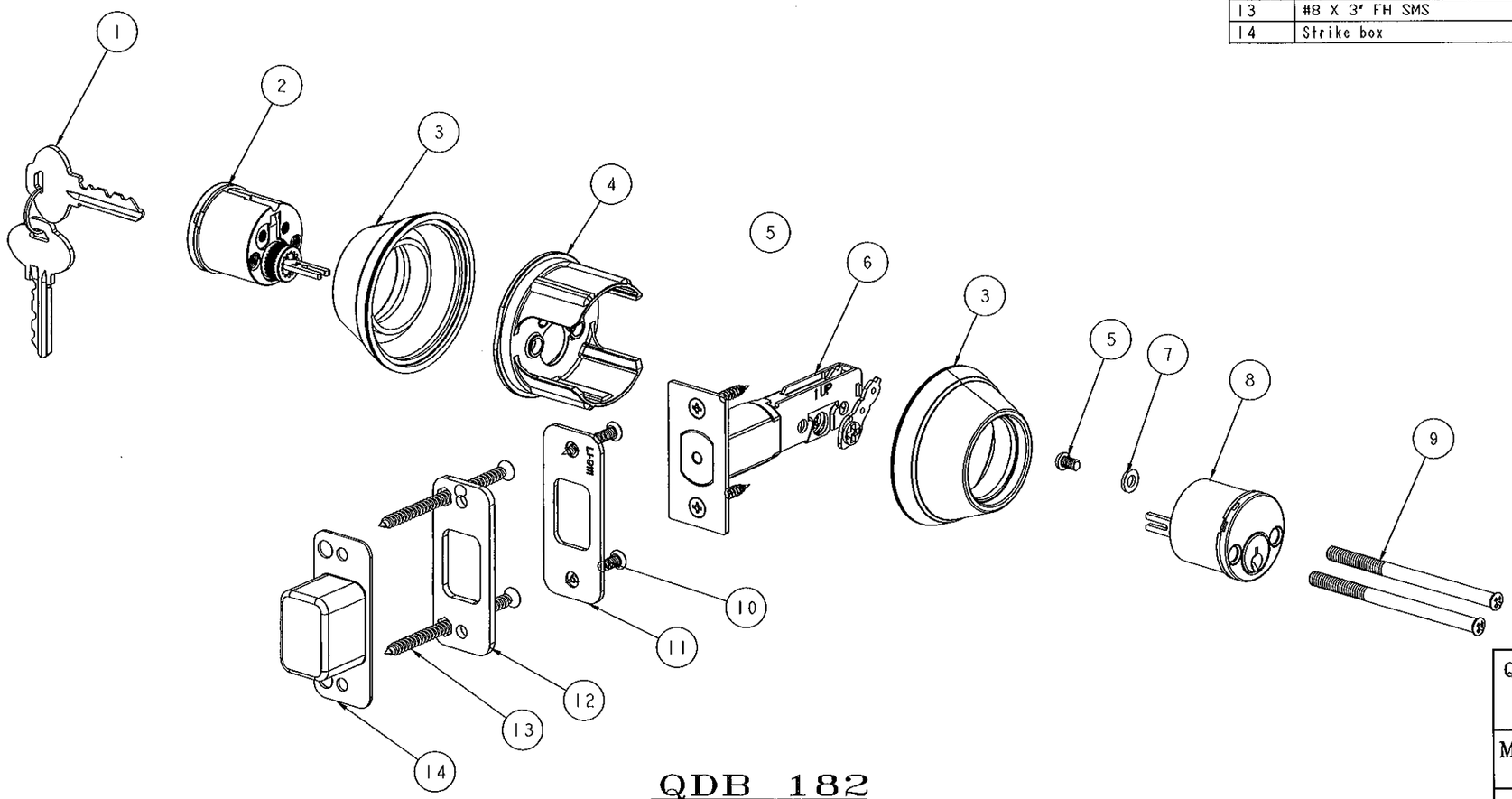

QDB 182

3/4" MIN. DEADBOLT THROW

Approved as complying with the Florida Building Code
Date 8/18/11
NOA# 11-0325.04
Miami Dade Product Control
By Ishaq Chanda

QDB 100 SERIES AUXILIARY DEADBOLTS TO BE USED WITH QCL SERIES 100/200 OR QTL SERIES 200 LEVERSET		
MAX. DESIGN PRESSURE RATING-PSF (48" WIDE X 96" HIGH SINGLE LEAF DOORS)		
HARDWARE MODEL	EXT. (+)	INT. (−)
QDB 180 QDB 181 QDB 182 (SHOWN) QDB 183	75.0	75.0

Engr: JAVAD AHMAD
CIVIL
FLA. PE # 70592
C.A.N. 3538

AUG 10 2011

AL-FAROOQ CORPORATION
ENGINEERS & PRODUCT DEVELOPMENT
1235 S.W. 87 AVE
MIAMI, FLORIDA 33174
TEL. (305) 264-8100 FAX. (305) 262-6978

LOCKS\11-01BD

K2 COMMERCIAL LOCKING HARDWARE COMPONENT APPROVAL

STANLEY SECURITY SOLUTIONS INC.
6161 E 75TH STREET
INDIANAPOLIS, IN, 46250
TEL. (800) 392-5209 FAX. (317) 806-3557

revisions:

no	date	by	description
A	05.05.11		REV. PER BNC COMMENTS
B	07.22.11		NO CHANGE THIS SHEET

date: 02-22-11
scale: -
dr. by: HAMID
chk. by:

drawing no. 11-01

NO.	Component	Spec	Qty	Remark
1	Key	CU	2	K2
2	Single cylinder		1	
3	Outside protect sleeve	CU SUS 0.4t	1	
4	Inside protect sleeve	steel forged	1	
5	Anti-pry	ZAMAK3	1	
6	Anti-Pry screw	steel	2	
7	Latch		1	
8	Circular external rings	spring steel∅9.7x12.6 0.4t	2	
9	Wave wash	spring steel0.3t∅14.5	2	
10	Inside support plate	SPCC2.0 63.9	1	
11	Inside rose plate	SPCC 1.2t	1	
12	Inside rose	0.4t	1	
13	One way screw	10B21 #12-24 L=68	2	
14	Turn button	ZAMAK3	1	
15	#8 X 1-1/4" FH SCREWS		2	
16	Strike plate	SPCC 2.0t	1	
17	#8 X 3" FH SMS		2	
18	Strike plate cover	S45C3.0 heat-treatment	1	HRC30-35°
19	Dust box	POM	1	

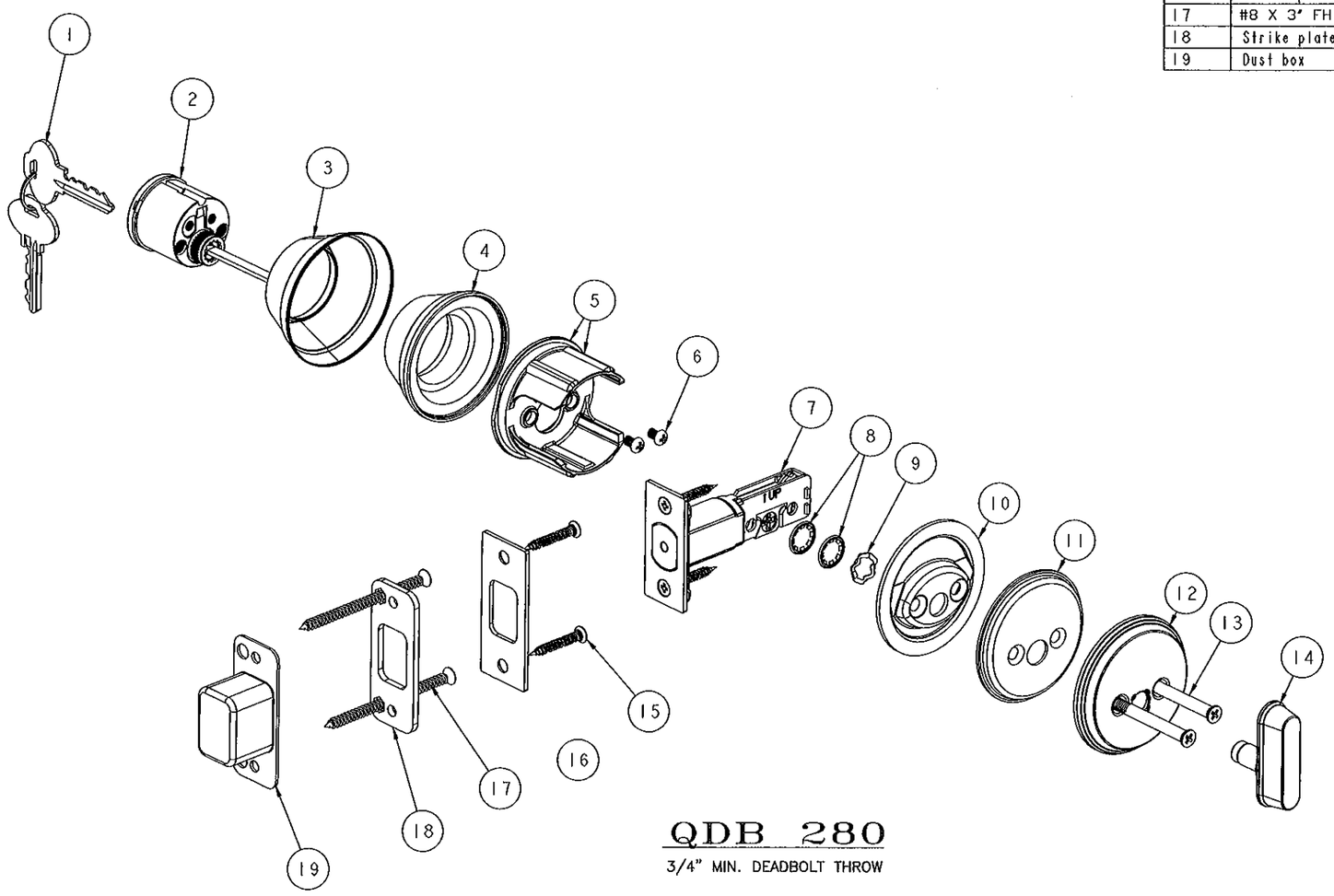

QDB 280

3/4" MIN. DEADBOLT THROW

Approved as complying with the Florida Building Code
Date 8/18/11
NOA# 11-0325.04
Miami-Dade Product Control
By Ishaq I. Chanda

QDB 200 SERIES AUXILIARY DEADBOLTS TO BE USED WITH QCL SERIES 100/200 OR QTL SERIES 200 LEVERSET		
MAX. DESIGN PRESSURE RATING-PSF (48" WIDE X 96" HIGH SINGLE LEAF DOORS)		
HARDWARE MODEL	EXT. (+)	INT. (-)
QDB 280 (SHOWN) QDB 281 QDB 282 QDB 283 QDB 284	75.0	75.0

Engr: JAVAD AHMAD
CIVIL
FLA. PE # 70592
C.A.N. 3538

AUG 10 2011

AL-FAROOQ CORPORATION
ENGINEERS & PRODUCT DEVELOPMENT
1235 S.W. 87 AVE
MIAMI, FLORIDA 33174
TEL. (305) 264-8100 FAX. (305) 262-6978

LOCKS\11-01BD

K2 COMMERCIAL LOCKING HARDWARE COMPONENT APPROVAL

STANLEY SECURITY SOLUTIONS INC.
6161 E 75TH STREET
INDIANAPOLIS, IN, 46250
TEL. (800) 392-5209 FAX. (317) 806-3557

revisions:

no	date	by	description
A	05.05.11		REV. PER BNC COMMENTS
B	07.22.11		NO CHANGE THIS SHEET

date: 02-22-11
scale: --
dr. by: HAMID
chk. by:

drawing no. 11-01

NO	Component	Spec	Qty	Remark
1	Key	CU	3	K2
2	Double outsidr cylinder		1	
3	Outside protect sleeve	CU SUS 0.4t	2	
4	Inside protect sleeve	steel forged	2	
5	Anti-pry	ZAMAK	1	
6	Anti-Pry screw	steel	2	
7	Outside washer maunting	SUS CU 0.6t	2	
8	Latch		1	
9	Double inside cylinder		1	
10	Double installation screw	35ACR 12*24 L=83	2	
11	#8 X 1-1/4" FH SCREWS		4	
12	Strike plate	SPCC 2.0t	1	
13	#8 X 3" FH SMS		2	
14	Strike plate cover	S45C 3.0t heat-treatment	1	HRC30-35°
15	Dust box	POM	1	

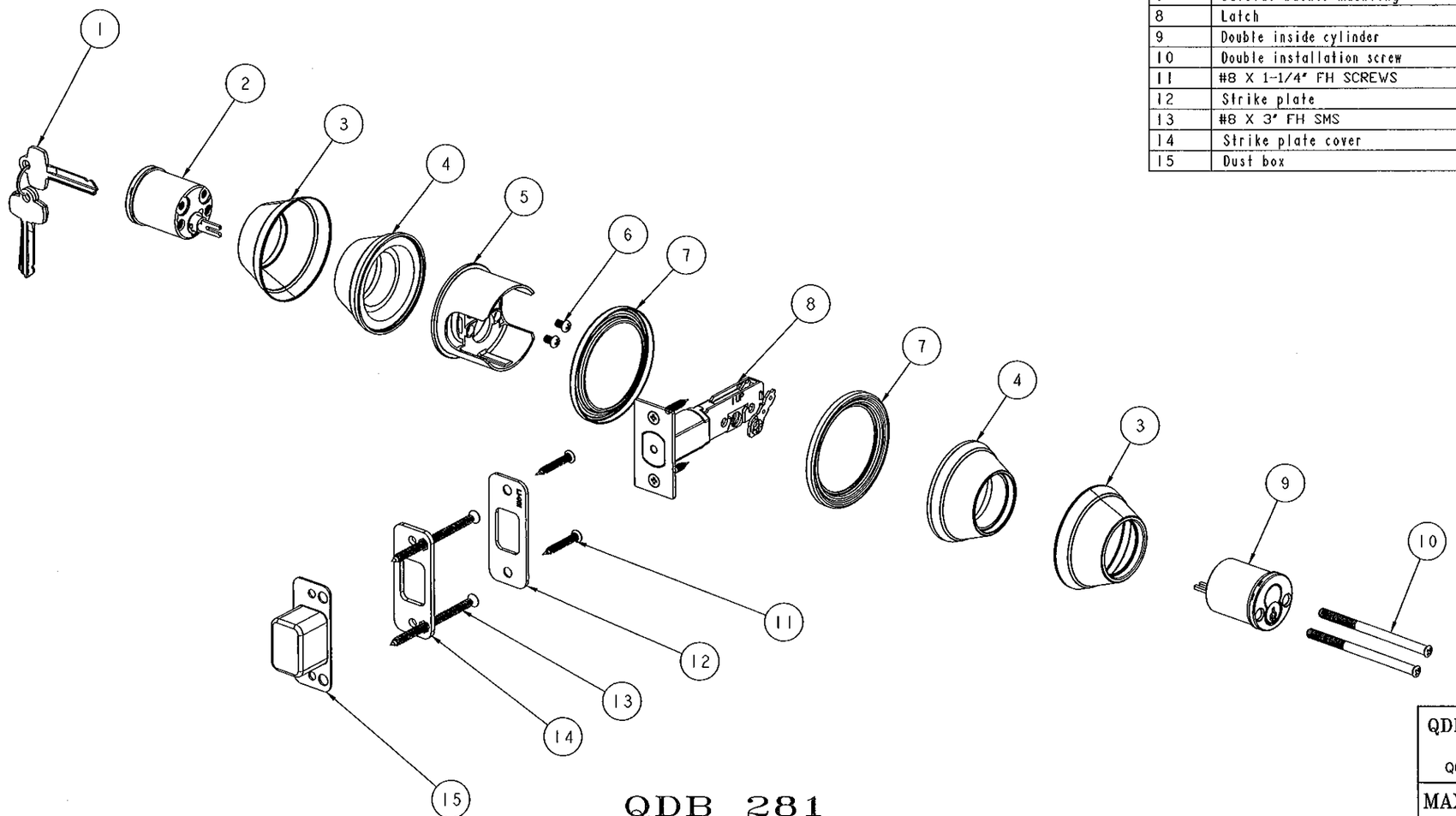

Approved as complying with the Florida Building Code
Date 8/18/11
NOA# 11-0325.04
Miami-Dade Product Control
By Ishaq I. Chanda

QDB 281

3/4" MIN. DEADBOLT THROW

QDB 200 SERIES AUXILIARY DEADBOLTS
TO BE USED WITH
QCL SERIES 100/200 OR QTL SERIES 200 LEVERSET

MAX. DESIGN PRESSURE RATING–PSF
(48" WIDE X 96" HIGH SINGLE LEAF DOORS)

HARDWARE MODEL	EXT. (+)	INT. (–)
QDB 280 QDB 281 (SHOWN) QDB 282 QDB 283 QDB 284	75.0	75.0

Engr: JAVAD AHMAD
CIVIL
FLA. PE # 70592
C.A.N. 3538

AUG 1 0 2011

AL-FAROOQ CORPORATION
ENGINEERS & PRODUCT DEVELOPMENT
1235 S.W. 87 AVE
MIAMI, FLORIDA 33174
TEL. (305) 264-8100 FAX. (305) 262-6978

LOCKS\11-01BD

K2 COMMERCIAL LOCKING HARDWARE COMPONENT APPROVAL

STANLEY SECURITY SOLUTIONS INC.
6161 E 75TH STREET
INDIANAPOLIS, IN, 46250
TEL. (800) 392-5209 FAX. (317) 806-3557

revisions:

no	date	by	description
A	05.05.11		REV. PER BNC COMMENTS
B	07.22.11		NO CHANGE THIS SHEET

date: 02-22-11
scale: –
dr. by: HAMID
chk. by:

drawing no.
11-01

NO	Component	Spec	Qty	Remark
1	Key	CU	2	K2
2	Double outsidr cylinder		1	
3	Outside protect sleeve	SUS CU 0.4t	2	
4	Inside protect sleeve	steel forged	1	
5	Anti-pry	ZAMAK	1	
6	Anti-Pry screw	steel	3	
7	Latch		1	
8	wash	SPCC 1.2t	1	
9	Double installation screw		1	
10	Double installation screw	35ACR 12*24 L=83	2	
11	#8 X 1-1/4" FH SCREWS		2	
12	Strike plate	SPCC 2.0t	1	
13	Strike plate cover	S45C3.0t heat-treatment	1	HRC30-35°
14	#8 X 3" FH SMS		2	
15	Dust box	POM	1	

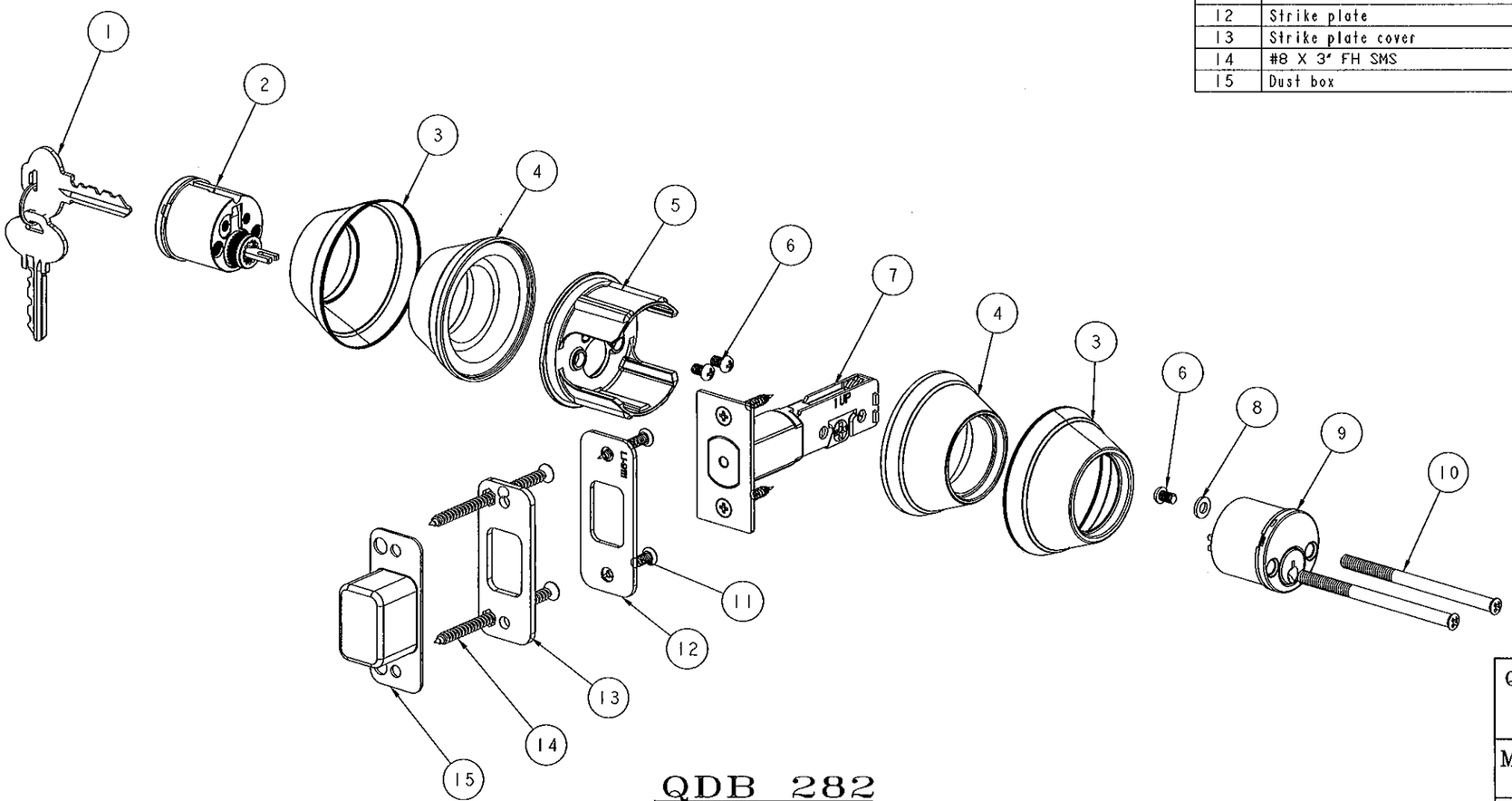

QDB 282

3/4" MIN. DEADBOLT THROW

Approved as complying with the Florida Building Code
Date 8/18/11
NOA# 11-0325.04
Miami Dade Product Control
By Ishaq I. Hanif

QDB 200 SERIES AUXILIARY DEADBOLTS TO BE USED WITH QCL SERIES 100/200 OR QTL SERIES 200 LEVERSET		
MAX. DESIGN PRESSURE RATING–PSF (48" WIDE X 96" HIGH SINGLE LEAF DOORS)		
HARDWARE MODEL	EXT. (+)	INT. (–)
QDB 280 QDB 281 QDB 282 (SHOWN) QDB 283 QDB 284	75.0	75.0

Engr.: JAVAD AHMAD
CIVIL
FLA. PE # 70592
C.A.N. 3538

AUG 10 2011

AL-FAROOQ CORPORATION
ENGINEERS & PRODUCT DEVELOPMENT
1235 S.W. 87 AVE
MIAMI, FLORIDA 33174
TEL. (305) 264-8100 FAX. (305) 262-6978

LOCKS\11-01BD

K2 COMMERCIAL LOCKING HARDWARE COMPONENT APPROVAL

STANLEY SECURITY SOLUTIONS INC.
6161 E 75TH STREET
INDIANAPOLIS, IN, 46250
TEL. (800) 392-5209 FAX. (317) 806-3557

revisions:

no	date	by	description
A	05.05.11		REV. PER BNC COMMENTS
B	07.22.11		NO CHANGE THIS SHEET

date: 02-22-11
scale: –
dr. by: HAMID
chk. by:

drawing no. 11-01

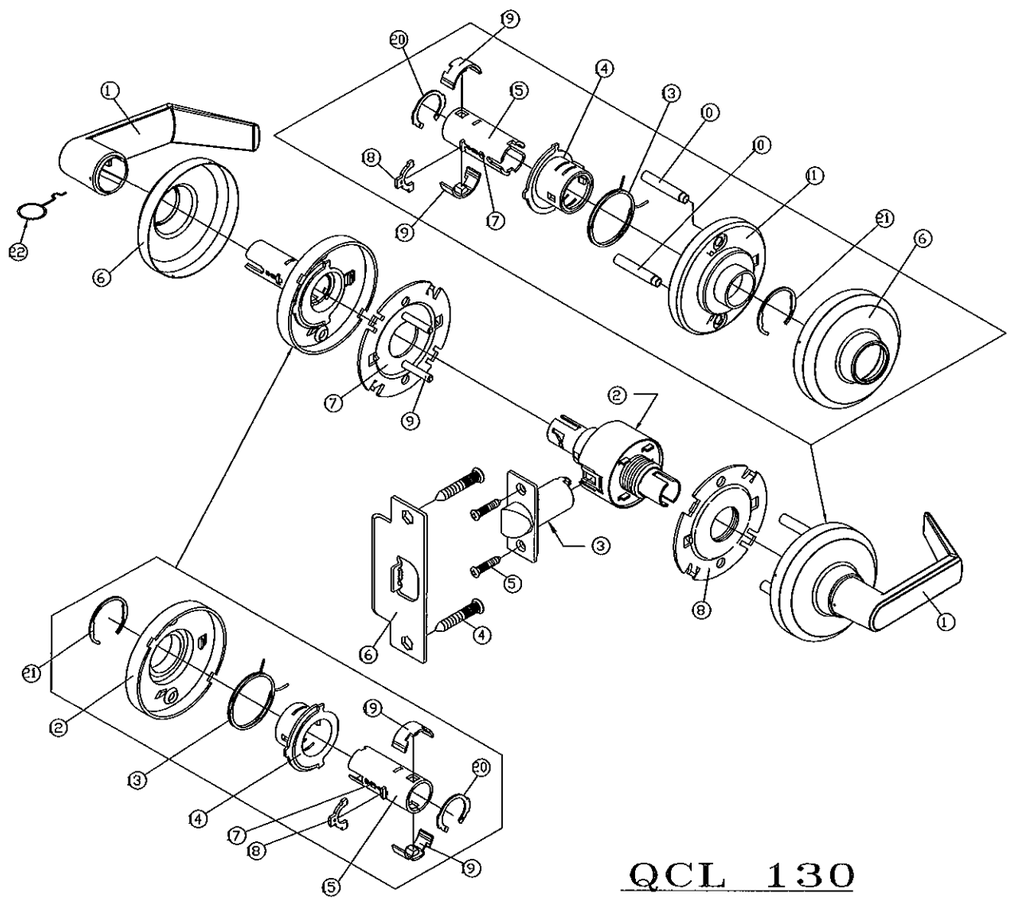

QCL 130

1/2" MIN. LATCH THROW

No	COMPONENT	SPEC	Q'TY	REMARK
1	PASSAGE LEVER	ZINC ALLOY	2	
2	#82 LOCK CHASSIS		1	
3	#82 LATCH		1	
4	SCREW	#12-24UNCx23.8	2	
5	SCREW	#8x3/4	2	
6	ROSE	CU,SUS 0.5t	2	
7	INSIDE MOUNTING PLATE	SPCC 2.0t	1	
8	OUTSIDE MOUNTING PLATE	SPCC 2.0t	1	
9	FIXED PIN	STEEL	2	
10	SUPPORTING NUT	STEEL	2	
11	OUTSIDE ROSE PLATE	SPCC 2.0t	1	CARBURIZED AND BLACKENED FOR WITH CYLINDER TYPE ONLY,OTHERS YELLOW CHROMATE SEAL
12	INSIDE ROSE PLATE	SPCC 2.0t	1	
13	ROTATING SPRING	SWPB	2	
14	ROTATING FIXED PLATE	SPCC 1.8t	2	
15	LEVER SLEEVE SUPPORT	SPCC 2.0t	2	CARBURIZED AND BLACKENED FOR WITH CYLINDER TYPE ONLY,OTHERS YELLOW CHROMATE SEAL
16	STRIKE PLATE-9109	SPCC,SUS 2.4t	1	
17	SPRING WIRE	ø0.7	2	
18	INSIDE RETAINER PLATE	SPCC 2.0t	2	
19	ROTATING KEY PLATE	ZINC ALLOY	4	
20	INSIDE RETAINING RING	SK5 1.2t	2	
21	RING	SK5 1.2t	2	
22	LEVER CATCH TOOL	WIRE	1	

Approved as complying with the Florida Building Code
Date 8/18/11
NOA# 11-0325.04
Miami Dade Product Control
By Ishag I. Chaudhary

QCL 100 SERIES CYLINDRICAL LEVERS TO BE USED WITH QDB SERIES 100/200 DEADBOLTS
HARDWARE MODEL
QCL 120
QCL 130 (SHOWN)
QCL 135
QCL 140
QCL 150
QCL 151
QCL 160
QCL 161
QCL 170
QCL 171

Engr: JAVAD AHMAD
CIVIL
FLA. PE # 10592
C.A.N. 3538

AUG 10 2011

AL-FAROOQ CORPORATION
ENGINEERS & PRODUCT DEVELOPMENT
1235 S.W. 87 AVE
MIAMI, FLORIDA 33174
TEL. (305) 264-8100 FAX. (305) 262-6978

LOCKS\11-01BD

K2 COMMERCIAL LOCKING HARDWARE COMPONENT APPROVAL

STANLEY SECURITY SOLUTIONS INC.
6161 E 75TH STREET
INDIANAPOLIS, IN, 46250
TEL. (800) 392-5209 FAX. (317) 806-3557

revisions:

no	date	by	description
A	05.05.11		REV. PER BNC COMMENTS
B	07.22.11		NO CHANGE THIS SHEET

date: 02-22-11
scale: –
dr. by: HAMID
chk. by:

drawing no. 11-01

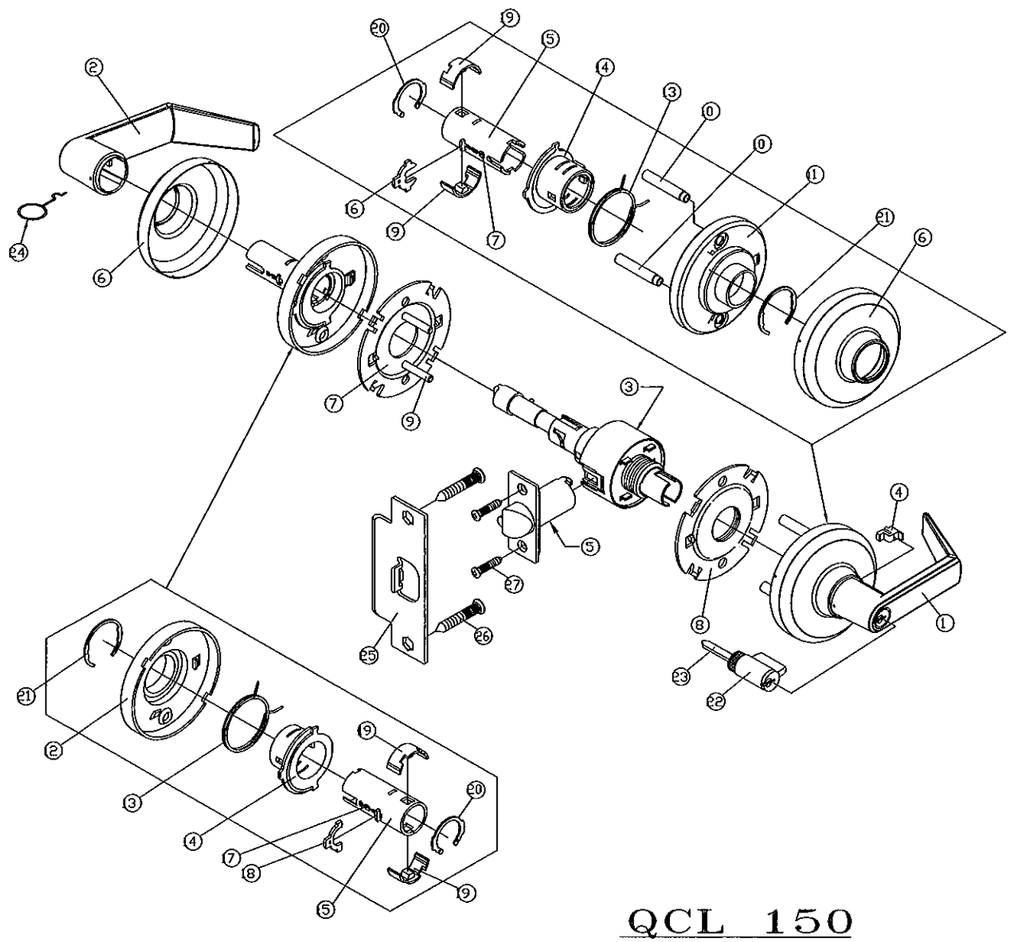

QCL 150

1/2" MIN. LATCH THROW

No	COMPONENT	SPEC	Q'TY	REMARK
1	ENTRY LEVER	ZINC ALLOY	1	
2	ENTRY,PRIVACY INSIDE LEVER	ZINC ALLOY	1	(#30 OUTSIDE SAME)
3	#00 LOCK CHASSIS		1	
4	LEVER AIDED SLEEVE	PLASTIC	1	
5	#00 LATCH		1	
6	ROSE	CU,SUS 0.5t	2	
7	INSIDE MOUNTING PLATE	SPCC 2.0t	1	
8	OUTSIDE MOUNTING PLATE	SPCC 2.0t	1	
9	FIXED PIN	STEEL	2	
10	SUPPORTING NUT	STEEL	2	
11	OUTSIDE ROSE PLATE	SPCC 2.0t	1	CARBURIZED AND BLACKENED FOR WITH CYLINDER TYPE ONLY,OTHERS YELLOW CHROMATE SEAL
12	INSIDE ROSE PLATE	SPCC 2.0t	1	
13	ROTATING SPRING	SWPB	2	
14	ROTATING FIXED PLATE	SPCC 1.8t	2	CARBURIZED AND BLACKENED FOR WITH CYLINDER TYPE ONLY,OTHERS YELLOW CHROMATE SEAL
15	LEVER SLEEVE SUPPORT	SPCC 2.0t	2	
16	S KEYWAY RETAINER PLATE	SPCC 2.0t	1	
17	SPRING WIRE	ø0.7	2	
18	INSIDE RETAINER PLATE	SPCC 2.0t	1	
19	ROTATING KEY PLATE	ZINC ALLOY	4	
20	INSIDE RETAINING RING	SK5 1.2t	2	
21	RING	SK5 1.2t	2	
22	S KEYWAY CYLINDER		1	
23	#00 TAIL PIECE	AISI 1018 HR15N 79°~90°	1	
24	LEVER CATCH TOOL	WIRE	1	
25	STRIKE PLATE-9109	SPCC,SUS 2.4t	1	
26	SCREW	#12-24UNCx23.8	2	
27	SCREW	#8x3/4	2	

Approved as complying with the Florida Building Code
Date 8/18/11
NOA# 11-0325.04
Miami Dade Product Control
By Ishaq I. Hand

QCL 100 SERIES CYLINDRICAL LEVERS
TO BE USED WITH QDB SERIES 100/200 DEADBOLTS
HARDWARE MODEL
QCL 120
QCL 130
QCL 135
QCL 140
QCL 150 (SHOWN)
QCL 151
QCL 160
QCL 161
QCL 170
QCL 171

Engr: JAVAD AHMAD
CIVIL
FLA. PE # 70592
C.A.N. 3538

AUG 10 2011

AL-FAROOQ CORPORATION
ENGINEERS & PRODUCT DEVELOPMENT
1235 S.W. 87 AVE
MIAMI, FLORIDA 33174
TEL. (305) 264-8100 FAX. (305) 262-6978

LOCKS\11-01BD

K2 COMMERCIAL LOCKING HARDWARE COMPONENT APPROVAL

STANLEY SECURITY SOLUTIONS INC.
6161 E 75TH STREET
INDIANAPOLIS, IN, 46250
TEL. (800) 392-5209 FAX. (317) 806-3557

revisions:

no	date	by	description
A	05.05.11		REV. PER BNC COMMENTS
B	07.22.11		NO CHANGE THIS SHEET

date: 02-22-11
scale: -
dr. by: HAMID
chk. by:

drawing no. 11-01

sheet 9 of 16

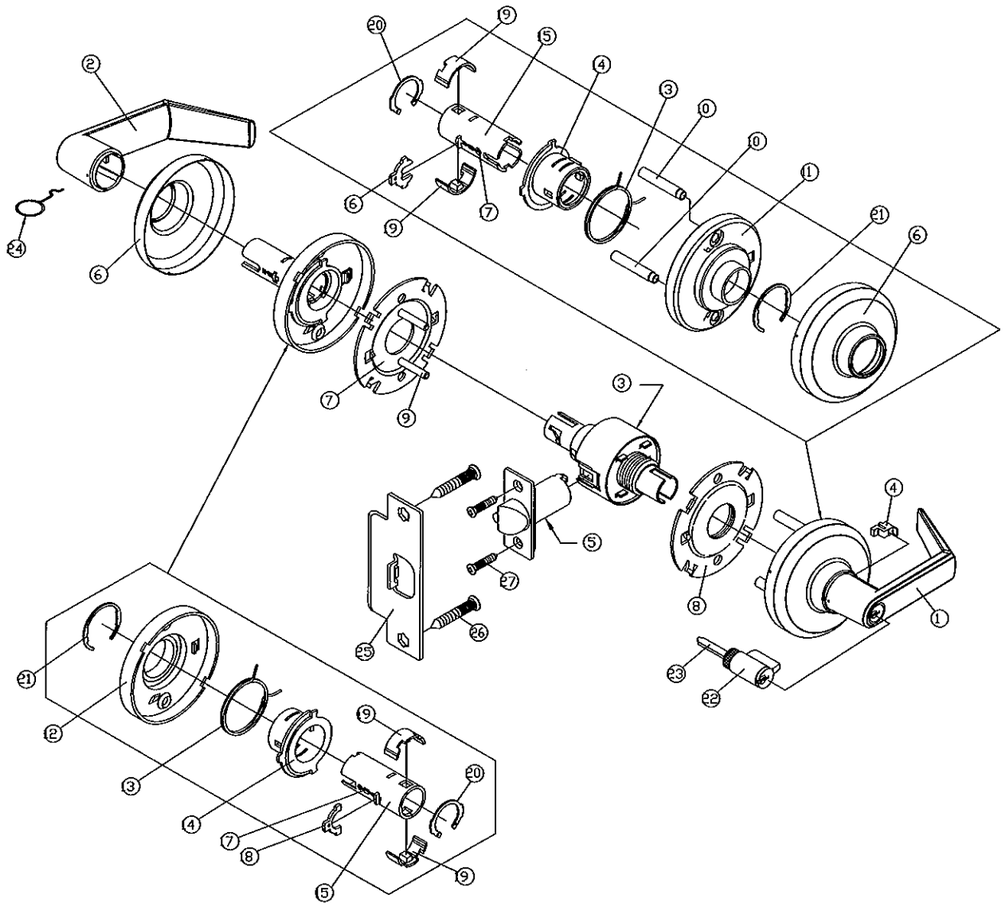

QCL 170

1/2" MIN. LATCH THROW

No	COMPONENT	SPEC	Q'TY	REMARK
1	ENTRY LEVER	ZINC ALLOY	1	
2	PASSAGE LEVER	ZINC ALLOY	1	
3	#62 LOCK CHASSIS		1	
4	LEVER AIDED SLEEVE	PLASTIC	1	
5	#00 LATCH		1	
6	ROSE	CU,SUS 0.5t	2	
7	INSIDE MOUNTING PLATE	SPCC 2.0t	1	
8	OUTSIDE MOUNTING PLATE	SPCC 2.0t	1	
9	FIXED PIN	STEEL	2	
10	SUPPORTING NUT	STEEL	2	
11	OUTSIDE ROSE PLATE	SPCC 2.0t	1	CARBURIZED AND BLACKENED FOR WITH CYLINDER TYPE ONLY,OTHERS YELLOW CHROMATE SEAL
12	INSIDE ROSE PLATE	SPCC 2.0t	1	
13	ROTATING SPRING	SWPB	2	
14	ROTATING FIXED PLATE	SPCC 1.8t	2	
15	LEVER SLEEVE SUPPORT	SPCC 2.0t	2	CARBURIZED AND BLACKENED FOR WITH CYLINDER TYPE ONLY,OTHERS YELLOW CHROMATE SEAL
16	S KEYWAY RETAINER PLATE	SPCC 2.0t	1	
17	SPRING WIRE	Ø0.7	2	
18	INSIDE RETAINER PLATE	SPCC 2.0t	1	
19	ROTATING KEY PLATE	ZINC ALLOY	4	
20	INSIDE RETAINING RING	SK5 1.2t	2	
21	RING	SK5 1.2t	2	
22	S KEYWAY CYLINDER		1	
23	#00 TAIL PIECE	AISI 1018 HR15N 79°~90°	1	
24	LEVER CATCH TOOL	WIRE	1	
25	STRIKE PLATE-9109	SPCC,SUS 2.4t	1	
26	SCREW	#12-24UNCx23.8	2	
27	SCREW	#8x3/4	2	

Approved as complying with the Florida Building Code
Date 8/18/11
NOA# 11-0325.04
Miami Dade Product Control
By Ishaq I. Chaudhary

QCL 100 SERIES CYLINDRICAL LEVERS TO BE USED WITH QDB SERIES 100/200 DEADBOLTS
HARDWARE MODEL
QCL 120
QCL 130
QCL 135
QCL 140
QCL 150
QCL 151
QCL 160
QCL 161
QCL 170 (SHOWN)
QCL 171

Engr: JAVAD AHMAD
CIVIL
FLA. PE # 70592
C.A.N. 3538

AUG 10 2011

AL-FAROOQ CORPORATION
ENGINEERS & PRODUCT DEVELOPMENT
1235 S.W. 87 AVE
MIAMI, FLORIDA 33174
TEL. (305) 264-8100 FAX. (305) 262-6978

LOCKS\11-01BD

K2 COMMERCIAL LOCKING HARDWARE COMPONENT APPROVAL

STANLEY SECURITY SOLUTIONS INC.
6161 E 75TH STREET
INDIANAPOLIS, IN, 46250
TEL. (800) 392-5209 FAX. (317) 806-3557

revisions:

no	date	by	description
A	05.05.11		REV. PER BNC COMMENTS
B	07.22.11		NO CHANGE THIS SHEET

date: 02-22-11
scale: –
dr. by: HAMID
chk. by:

drawing no. 11-01

No	COMPONENT	SPEC	QTY	REMARK
1	Retractor spring plate	SPCC 0.9t	1	
2	Inside reactor plate	SPCC 2.3t	1	
3	Retractor	SPCC 1.6t	1	
4	Retractor sleeve	SPCC 1.4t	1	
5	Latch		1	
6	Retainer plate	SPCC 2.0t	1	
7	Inside retainer plate	SPCC 2.0t	1	
8	Outside reactor plate	SPCC 2.3t	1	
9	Outside spindle	SPCC 1.5t	1	
10	Seady bushing	FC-0208-40	1	
11	Passage lever	ZAMK 3	2	
12	Inside rose mounting	ZAMK	1	
13	Outside mounting plate	SPCC 2.0t	1	
14	Outside spindle	ZAMK	1	
15	Rose	C2600,SUS304 0.5t	2	
16	Inside seady bushing	ZAMAK 8	1	
17	Inside spindle	SPCC 1.5t	1	
18	Cylinder case	SPCC 0.9t	1	
19	Outside sleeve support	SPCC 1.2t	1	
20	Turning mounting	SPCC 2.0t	2	
21	Turning spring	SWPB	2	
22	Turning plate	SPCC 1.2t	2	

No	COMPONENT	SPEC	QTY	REMARK
23	Inside mounting plate	SPCC 2.0t	1	
24	Supporting nut	Steel	2	
25	Retractor spring	SWB	2	
26	EA Twin thread wood screw	#8x19	2	
27	EA Twin thread screw	#12x23.8	2	
28	Strike	SUS	1	
29	FC Monting screw	M5x38	4	

Approved as complying with the Florida Building Code
Date 8/18/11
NOA# 11-0325.07
Miami Dade Product Control
By Ishaq I. Chunde

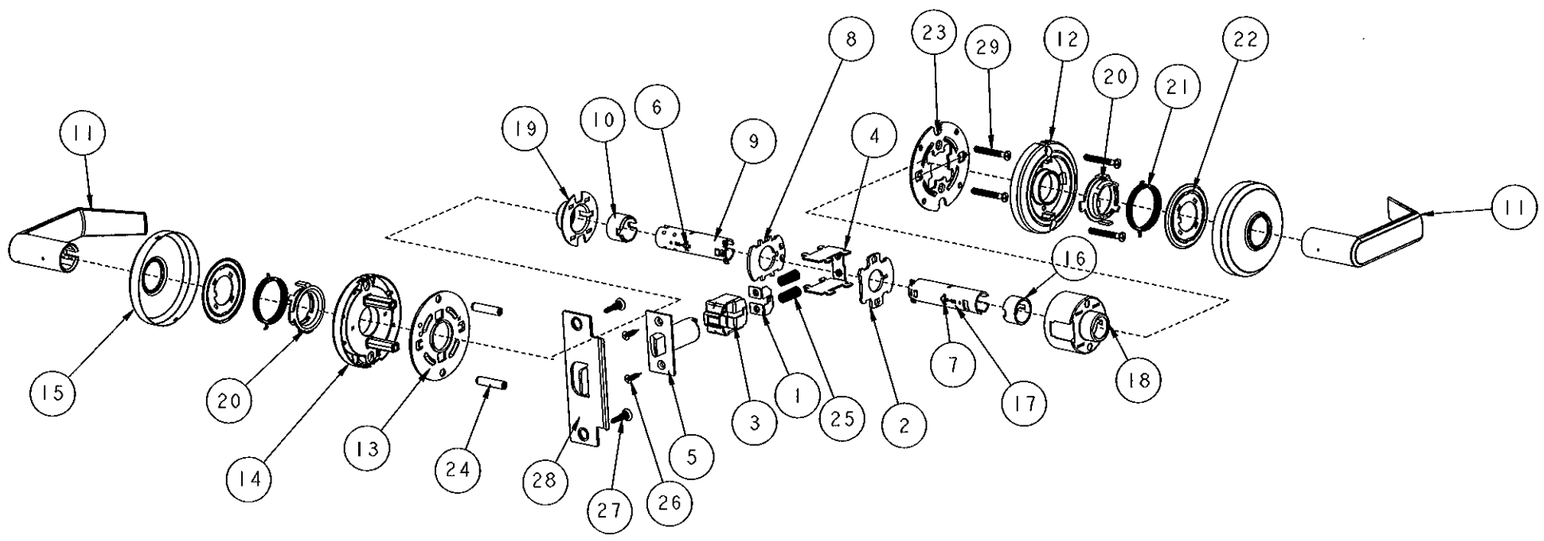

QCL 230

1/2" MIN. LATCH THROW

QCL 200 SERIES CYLINDRICAL LEVERS

TO BE USED WITH
QDB SERIES 100/200 DEADBOLTS

HARDWARE MODEL
QCL 220
QCL 230 (SHOWN)
QCL 235
QCL 240
QCL 250
QCL 251
QCL 260
QCL 261
QCL 270
QCL 271

Engr: JAVAD AHMAD
CIVIL
FLA. PE # 70592
C.A.N. 3538

AUG 10 2011

AL-FAROOQ CORPORATION
ENGINEERS & PRODUCT DEVELOPMENT
1235 S.W. 87 AVE
MIAMI, FLORIDA 33174
TEL. (305) 264-8100 FAX. (305) 262-6978

LOCKS\11-01BD

K2 COMMERCIAL LOCKING HARDWARE COMPONENT APPROVAL

STANLEY SECURITY SOLUTIONS INC.
6161 E 75TH STREET
INDIANAPOLIS, IN, 46250
TEL. (800) 392-5209 FAX. (317) 806-3557

revisions:

no	date	by	description
A	05.05.11		REV. PER BNC COMMENTS
B	07.22.11		NO CHANGE THIS SHEET

date: 02-22-11
scale: -
dr. by: HAMID
chk. by:

drawing no. 11-01

No	COMPONENT	SPEC	QTY	REMARK
1	Retractor spring plate	SPCC 0.9t	1	
2	Latch		1	
3	Inside reactor plate	SPCC 2.3t	1	
4	Retractor	SPCC 1.6t	1	
5	Retractor sleeve	SPCC 1.4t	1	
6	Clinder		1	
7	Retainer plate	SPCC 2.0t	1	
8	Inside retainer plate	SPCC 2.0t	1	
9	Button leeve	SUS,CU 0.4t	1	
10	Key locking ring	SPCC 2.0t	1	
11	Entry lever	ZAMK 3	1	
12	Inside rose mounting	ZAMK	1	
13	Inside lever	ZAMK 3	1	
14	Outside mounting plate	SPCC 2.0t	1	
15	Outside rose mounting	ZAMK	1	
16	Rose	C2600,SUS304 0.5t	2	
17	Inside steady bushing	ZAMAK 8	1	
18	Inside spindle	SPCC 1.5t	1	
19	Cylinder case	SPCC 0.9t	1	
20	Outside sleeve support	SPCC 1.2t	1	
21	Outside reactor plate	SPCC 2.3t	1	
22	Outside steady bushing	ZAMK	1	

No	COMPONENT	SPEC	QTY	REMARK
23	Outside spindle	SPCC 1.5t	1	
24	Outside spindle washer	SWC	1	
25	Lever aided sleeve	ABS	1	
26	Button stem	SPCC 2.3t	1	
27	Turning mounting	SPCC 2.0t	2	
28	Turning spring	SWPB	2	
29	Turning plate	SPCC 1.2t	2	
30	Inside mounting plate	SPCC 2.0t	1	
31	Supporting nut		2	
32	Key turn spring	SWB	1	
33	key turn spindle	SPCC 1.5t	1	
34	Turn push mounting	Stainless powder metallurgy	1	
35	Turn plate	SPCC 2.0t 15N80°~85°	1	
36	Entry up button washer	SPCC 1.4t	1	
37	Down button washer	SPCC 1.2t	1	
38	Pistic button	ABS	1	
39	Retvactor spring	SWB	2	
40	EA Twin thread wood screw	#8x19	2	
41	EA Twin thread screw	#12x23.8	2	
42	FC Monting screw	M5x38	4	
43	Strike	SUS	1	

Approved as complying with the Florida Building Code
Date: 8/18/11
NOA#: 11-0325.04
Miami Dade Product Control
By: [illegible]

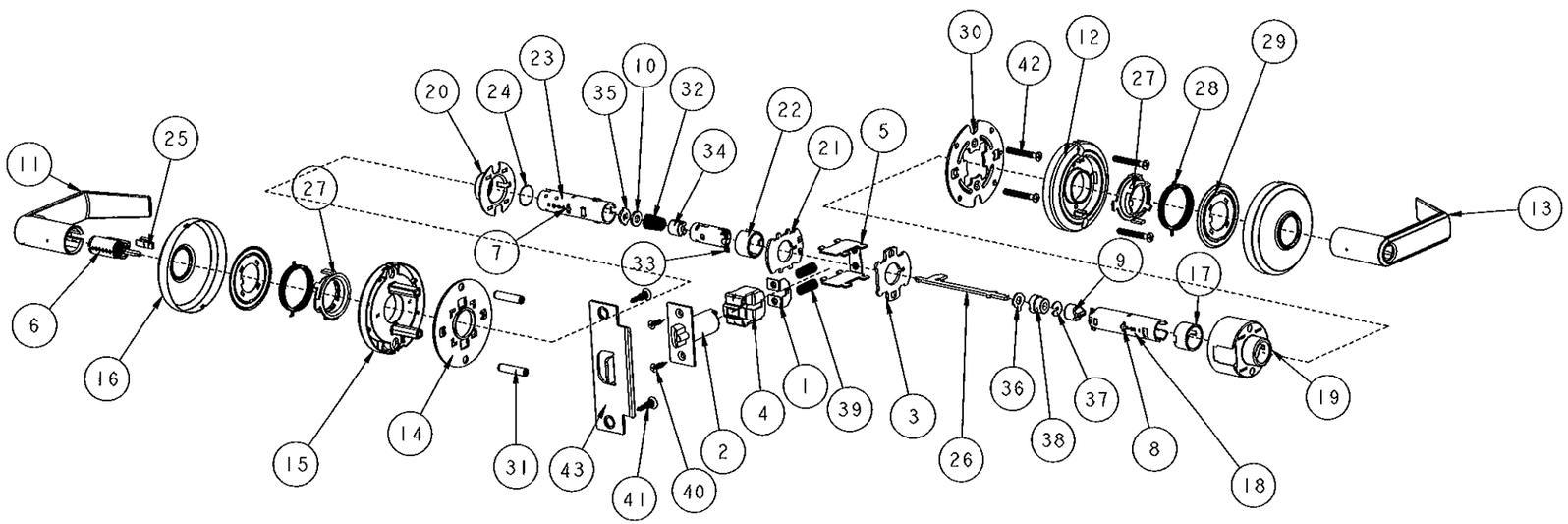

QCL 250

1/2" MIN. LATCH THROW

QCL 200 SERIES CYLINDRICAL LEVERS

TO BE USED WITH
QDB SERIES 100/200 DEADBOLTS

HARDWARE MODEL
QCL 220
QCL 230
QCL 235
QCL 240
QCL 250 (SHOWN)
QCL 251
QCL 260
QCL 261
QCL 270
QCL 271

Engr: JAVAD AHMAD
CIVIL
FLA. PE # 70592
C.A.N. 3538

AUG 1 0 2011

AL-FAROOQ CORPORATION
ENGINEERS & PRODUCT DEVELOPMENT
1235 S.W. 87 AVE
MIAMI, FLORIDA 33174
TEL. (305) 264-8100 FAX. (305) 262-6978

LOCKS\11-01BD

K2 COMMERCIAL LOCKING HARDWARE COMPONENT APPROVAL

STANLEY SECURITY SOLUTIONS INC.
6161 E 75TH STREET
INDIANAPOLIS, IN, 46250
TEL. (800) 392-5209 FAX. (317) 806-3557

revisions:

no	date	by	description
A	05.05.11		REV. PER BNC COMMENTS
B	07.22.11		NO CHANGE THIS SHEET

date: 02-22-11
scale: -
dr. by: HAMID
chk. by:

drawing no. 11-01

No	COMPONENT	SPEC	QTY	REMARK
1	Retractor spring plate	SPCC 0.9t	1	
2	Latch		1	
3	Inside Reactor plate	SPCC 2.3t	1	
4	Retractor	SPCC 1.6t	1	
5	Retractor sleeve	SPCC 1.4t	1	
6	Cylinder		1	
7	Retainer plate	SPCC 2.0t	1	
8	Inside retainer plate	SPCC 2.0t	1	
9	Key locking ring	SPCC 2.0t	1	
10	Entry lever	ZAMK 3	1	
11	Passage lever	ZAMK 3	1	
12	Inside rose mounting	ZAMK	1	
13	Outside mounting plate	SPCC 2.0t	1	
14	Outside rose mounting	ZAMK	1	
15	Rose	C2600,SUS304 0.5t	2	
16	Inside steady bushing	ZAMAK 8	1	
17	Inside spindle	SPCC 1.5t	2	
18	Cylinder case	SPCC 0.9t	1	
19	Outside sleeve support	SPCC 1.2t	1	
20	Outside reactor plate	SPCC 2.3t	1	

No	COMPONENT	SPEC	QTY	REMARK
21	Outside steady bushing	ZAMK	1	
22	Outside spindle	SPCC 1.5t	1	
23	Outside spindle washer	SWC	1	
24	Lever aided sleeve	ABS	1	
25	Turning mounting	SPCC 2.0t	2	
26	Turning spring	SWPB	2	
27	Turning plate	SPCC 1.2t	2	
28	Inside mounting plate	SPCC 2.0t	1	
29	Supporting nut	Steel	2	
30	Key turn spring	SWB	1	
31	Key turn spindle	SPCC 1.5t	1	
32	Turn push mounting	Stainless powder metallurgy	1	
33	Turn plate	SPCC 2.0t 15N80°~85°	1	
34	Retractor spring	SWB	2	
35	EA Twin thread wood screw	#8x19	2	
36	EA Twin thread screw	#12x23.8	2	
37	FC Monting screw	M5x38	4	
38	Strike	SUS	1	

Approved as complying with the Florida Building Code
Date 8/18/11
NOA# 11-0325.04
Miami Dade Product Control
By Ishaq L. Khan

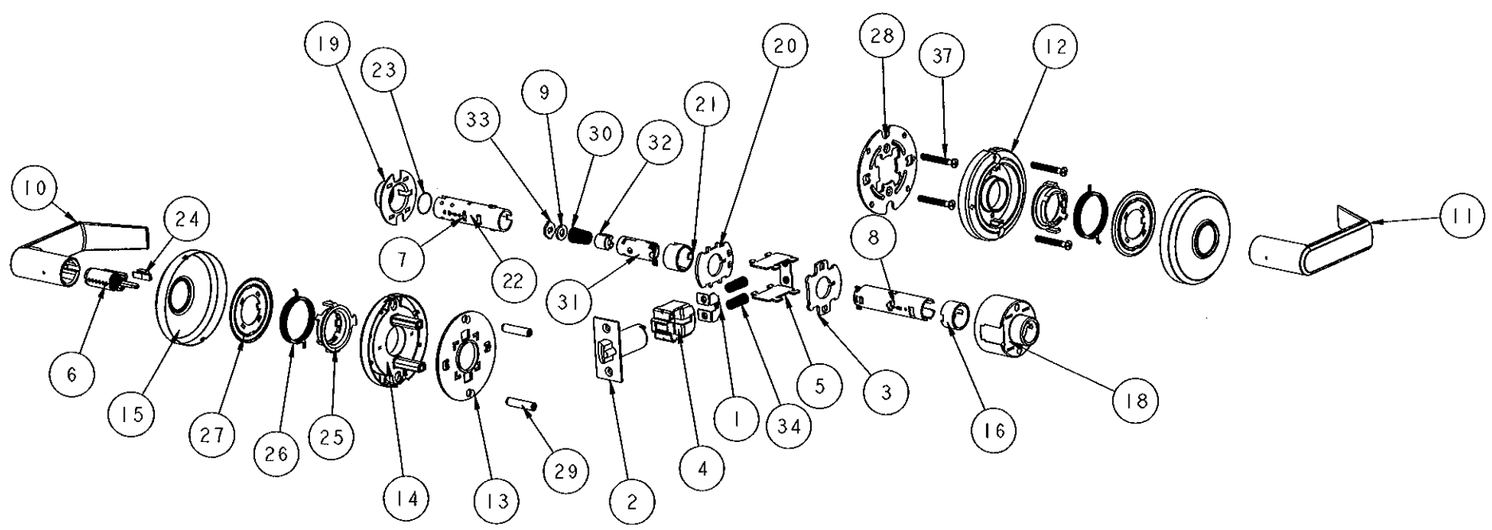

QCL 270

1/2" MIN. LATCH THROW

QCL 200 SERIES CYLINDRICAL LEVERS
TO BE USED WITH
QDB SERIES 100/200 DEADBOLTS

HARDWARE MODEL
QCL 220
QCL 230
QCL 235
QCL 240
QCL 250
QCL 251
QCL 260
QCL 261
QCL 270 (SHOWN)
QCL 271

Engr: JAVAD AHMAD
CIVIL
FLA. PE # 70592
C.A.N. 3538
AUG 1 0 2011

AL-FAROOQ CORPORATION
ENGINEERS & PRODUCT DEVELOPMENT
1235 S.W. 87 AVE
MIAMI, FLORIDA 33174
TEL. (305) 264-8100 FAX. (305) 262-6978

LOCKS\11-01BD

K2 COMMERCIAL LOCKING HARDWARE COMPONENT APPROVAL

STANLEY SECURITY SOLUTIONS INC.
6161 E 75TH STREET
INDIANAPOLIS, IN, 46250
TEL. (800) 392-5209 FAX. (317) 806-3557

revisions:

no	date	by	description
A	05.05.11		REV. PER BNC COMMENTS
B	07.22.11		NO CHANGE THIS SHEET

date: 02-22-11
scale: -
dr. by: HAMID
chk. by:

drawing no. 11-01

No	COMPONENT	SPEC	QTY	REMARK
1	Retainer plate	SPCC 2.0t	1	
2	Outside turning plate	SPCC 1.5t	1	
3	Rose	C2600,SUS304 0.5t	2	
4	Inside supporting nut	Free cutting iron	2	
5	Inside turning plate	SPCC 1.5t	1	
6	Inside spindle	SPCC 1.5t	2	
7	Fixed cylinder housing	SPCC 0.9t	1	
8	Roating stem	Steel	1	
9	Locking ring	Powder metallurgy	2	
10	Turning mounting	SPCC 1.5t	2	
11	Inside turning spring	SWPB	1	
12	Rose plate	SPCC 1.4t	2	
13	Passage lever	ZAMK 3	2	
14	Turning spring	SWPB	1	
15	Supporting nut	Free cutting iron	2	
16	TA screw	#8x24	2	
17	EA Twin thread screw	#8x19	4	
18	Strike	SUS	1	
19	Latch		1	

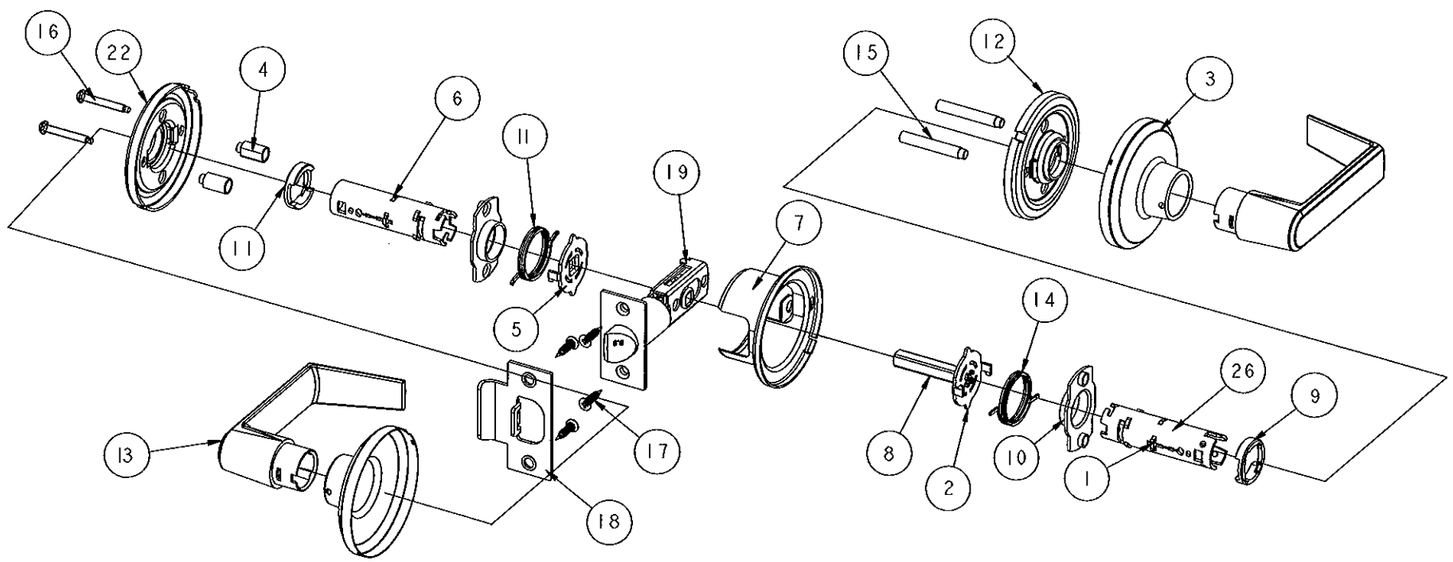

QTL 230

1/2" MIN. LATCH THROW

QTL 200 SERIES TUBULAR LEVERS TO BE USED WITH QDB SERIES 100/200 DEADBOLTS
HARDWARE MODEL
QTL 230 (SHOWN) QTL 240 QTL 250 QTL 251 QTL 260 QTL 261 QTL 270 QTL 271

Engr: JAVAD AHMAD
CIVIL
FLA. PE # 70592
C.A.N. 3538

AUG 10 2011

Approved as complying with the Florida Building Code
Date 8/18/11
NOA# 11-0325.04
Miami Dade Product Control
By Ishaq L. Chande

AL-FAROOQ CORPORATION
ENGINEERS & PRODUCT DEVELOPMENT
1235 S.W. 87 AVE
MIAMI, FLORIDA 33174
TEL. (305) 264-8100 FAX. (305) 262-6978

LOCKS\11-01BD

K2 COMMERCIAL LOCKING HARDWARE COMPONENT APPROVAL

STANLEY SECURITY SOLUTIONS INC.
6161 E 75TH STREET
INDIANAPOLIS, IN, 46250
TEL. (800) 392-5209 FAX. (317) 806-3557

revisions:

no	date	by	description
A	05.05.11		REV. PER BNC COMMENTS
B	07.22.11		NO CHANGE THIS SHEET

date: 02-22-11
scale: -
dr. by: HAMID
chk. by:

drawing no. 11-01

No	COMPONENT	SPEC	QTY	REMARK
1	Retainer plate	SPCC 2.0t	1	
2	Steady piece	SPCC 1.2t	1	
3	Rose	C2600, SUS304 0.5t	2	
4	Inside supporting nut	Free cutting iron	2	
5	Inside turning plate	SPCC 1.5t	1	
6	Outside spindle	SPCC 1.5t	1	
7	Fixed cylinder housing	SPCC 0.9t	1	
8	Outside turning plate	SPCC 1.5t	1	
9	Locking recover plate	SPCC 1.6t15N70~75°	1	
10	Locking Fixed plate	SPCC 1.2t	1	
11	Locking ring	Powder metallurgy	2	
12	Locking plate	SPCC 1.2t15N80~85°	2	
13	Turning mounting	SPCC 1.5t	2	
14	Turning stem mounting	SPCC 1.2T	1	
15	Roating key plate	SPCC 1.4t15N70~75°	1	
16	Retainer plate	SPCC 2.0t	1	
17	Cylinder lock turn mounting	Powder metallurgy	1	
18	Turn button	POM	1	
19	Turn button mounting	POM	1	

No	COMPONENT	SPEC	QTY	REMARK
20	Turn button Cover	SUS304, C2600 0.4t	1	
21	Entry turn button stem	SPCC 2.0t15N80~85°	1	
22	Rose plate	SPCC 1.4t	2	
23	Entry lever	ZAMK 3	1	
24	Inside lever	ZAMK 3	1	
25	Cylinder		1	
26	Entry outside spirdle	SPCC 1.5t	1	
27	Lever alded sleeve	ABS	1	
28	Inside turning spring	SWPB	1	
29	Turning spring	SWPB	1	
30	Supporting nut	Free cutting iron	2	
31	Roating stem	Steel	1	
32	Locking spring	SWC Ø0.7	1	
33	TA screw	#8x24	2	
34	EA Twin thread screw	#8x19	4	
35	Strike	SUS	1	
36	Latch		1	

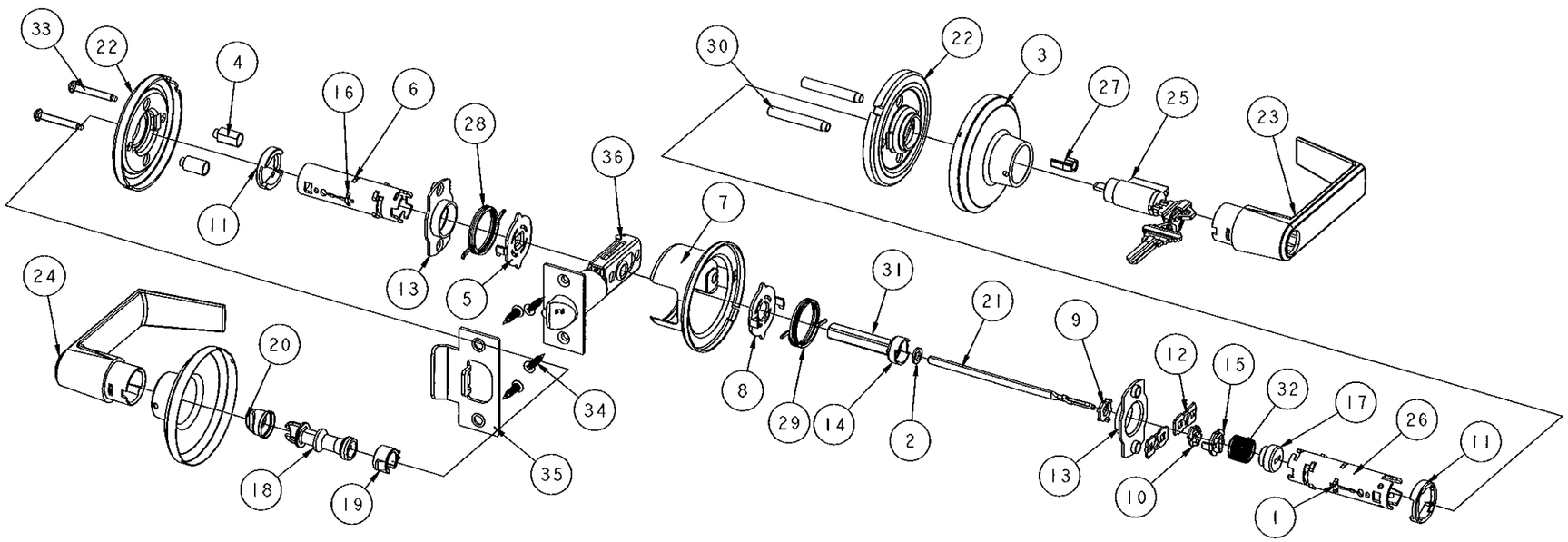

Approved as complying with the Florida Building Code
Date 8/18/11
NOA# 11-0325.04
Miami Dade Product Control
By Ishaq L. Chanda

QTL 250

1/2" MIN. LATCH THROW

QTL 200 SERIES TUBULAR LEVERS TO BE USED WITH QDB SERIES 100/200 DEADBOLTS
HARDWARE MODEL
QTL 230
QTL 240
QTL 250 (SHOWN)
QTL 251
QTL 260
QTL 261
QTL 270
QTL 271

Engr: JAVAD AHMAD
CIVIL
FLA. PE # 70592
C.A.N. 3538
AUG 10 2011

AL-FAROOQ CORPORATION
ENGINEERS & PRODUCT DEVELOPMENT
1235 S.W. 87 AVE
MIAMI, FLORIDA 33174
TEL. (305) 264-8100 FAX. (305) 262-6978

LOCKS\11-01BD

K2 COMMERCIAL LOCKING HARDWARE COMPONENT APPROVAL

STANLEY SECURITY SOLUTIONS INC.
6161 E 75TH STREET
INDIANAPOLIS, IN, 46250
TEL. (800) 392-5209 FAX. (317) 806-3557

revisions:

no	date	by	description
A	05.05.11		REV. PER BNC COMMENTS
B	07.22.11		NO CHANGE THIS SHEET

date: 02-22-11
scale: -
dr. by: HAMID
chk. by:

drawing no. 11-01

No	COMPONENT	SPEC	QTY	REMARK
1	Retainer plate	SPCC 2.0t	1	
2	Inside retainer plate	SPCC 1.2t	2	
3	Outside turning plate	SPCC 1.5t	1	
4	Turning stem mounting	SPCC 1.2T	1	
5	Cylinder lock turn mounting	Powder metalluigy	1	
6	Rose	C2600,SUS304 0.5t	2	
7	Inside supdrting nut	Free cutting iron	2	
8	Inside turning plate	SPCC 1.5t	1	
9	Inside spindle	SPCC 1.5t	1	
10	Fixed cylinder housing	SPCC 0.9t	1	
11	Locking fixed plate	SPCC 1.2t	1	
12	Locking ring	Powder metalluigy	2	
13	Locking plate	SPCC 1.2t15N80~85°	2	
14	Turning mounting	SPCC 1.5t	2	
15	Roating key plate	SPCC 1.4t15N70~75°	1	
16	Retainer plate	SPCC 2.0t	1	
17	Turn button stem	SPCC 2.0t15N80~85°	1	
18	Rose plate	SPCC 1.4t	2	
19	Entry lever	ZAMK 3	1	

No	COMPONENT	SPEC	QTY	REMARK
20	Passage lever	ZAMK 3	1	
21	Cylinder		1	
22	Entry outside spindle	SPCC 1.5t	1	
23	Lever aided sleeve	ABS	1	
24	Inside turning spring	SWPB	1	
25	Turning spring	SWPB	1	
26	Supporting nut	Free cutting iron	2	
27	Roating stem	Steel	1	
28	Locking spring	SWC Ø0.7	1	
29	TA screw	#8x24	2	
30	EA Twin thread screw	#8x19	4	
31	Strike	SUS	1	
32	Latch		1	

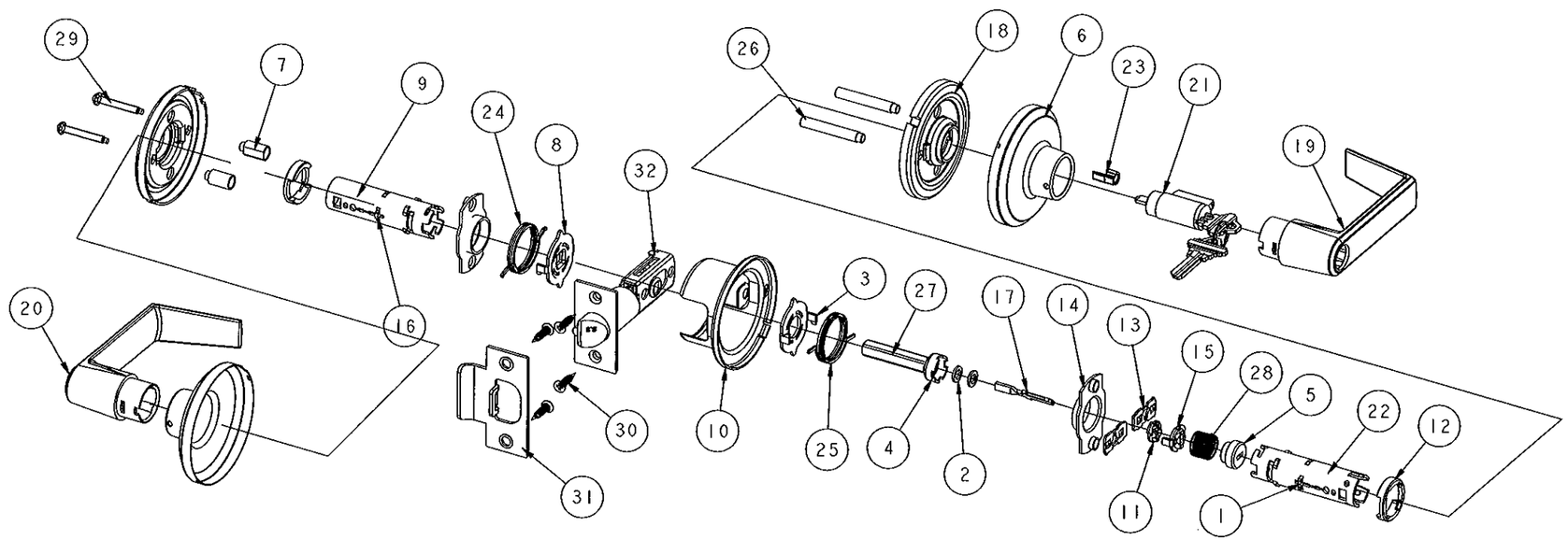

Approved as complying with the Florida Building Code
Date 8/18/11
NOA# 11-0325.04
Miami Dade Product Control
By Ishaq I. Chanda

QTL 270

1/2" MIN. LATCH THROW

QTL 200 SERIES TUBULAR LEVERS TO BE USED WITH QDB SERIES 100/200 DEADBOLTS
HARDWARE MODEL
QTL 230
QTL 240
QTL 250
QTL 251
QTL 260
QTL 261
QTL 270 (SHOWN)
QTL 271

Engr: JAVAD AHMAD
CIVIL
FLA. PE # 70592
C.A.N. 13538
AUG 10 2011

AL-FAROOQ CORPORATION
ENGINEERS & PRODUCT DEVELOPMENT
1235 S.W. 87 AVE
MIAMI, FLORIDA 33174
TEL. (305) 264-8100 FAX. (305) 262-6978

afc

LOCKS\11-01BD

K2 COMMERCIAL LOCKING HARDWARE COMPONENT APPROVAL

STANLEY SECURITY SOLUTIONS INC.
6161 E 75TH STREET
INDIANAPOLIS, IN, 46250
TEL. (800) 392-5209 FAX. (317) 806-3557

revisions:

no	date	by	description
A	05.05.11		REV. PER BNC COMMENTS
B	07.22.11		NO CHANGE THIS SHEET

date: 02-22-11
scale: –
dr. by: HAMID
chk. by:

drawing no.
11-01