MIAMI-DADE COUNTY
DEPARTMENT OF PERMITTING, ENVIRONMENT, AND REGULATORY AFFAIRS (PERA)
BOARD AND CODE ADMINISTRATION DIVISION

MIAMI–DADE COUNTY, Florida
PRODUCT CONTROL SECTION
11805 SW 26 Street, Room 208
Miami, Florida 33175–2474
T (786) 315–2590 F (786) 315–2599
www.miamidade.gov/pera/

NOTICE OF ACCEPTANCE (NOA)

Atrium Companies, Inc.
9001 Ambassador Row
Dallas, TX 75247

SCOPE:

This NOA is being issued under the applicable rules and regulations governing the use of construction materials. The documentation submitted has been reviewed and accepted by Miami–Dade County PERA–Product Control Section to be used in Miami–Dade County and other areas where allowed by the Authority Having Jurisdiction (AHJ).

This NOA shall not be valid after the expiration date stated below. The Miami–Dade County Product Control Section (In Miami–Dade County) and/or the AHJ (in areas other than Miami–Dade County) reserve the right to have this product or material tested for quality assurance purposes. If this product or material fails to perform in the accepted manner, the manufacturer will incur the expense of such testing and the AHJ may immediately revoke, modify, or suspend the use of such product or material within their jurisdiction. PERA reserves the right to revoke this acceptance, if it is determined by Miami–Dade County Product Control Section that this product or material fails to meet the requirements of the applicable building code.

This product is approved as described herein, and has been designed to comply with the Florida Building Code, including the High Velocity Hurricane Zone.

DESCRIPTION: Series "2500/ RW 4–5 XHP" Aluminum Horizontal Sliding Window – N. I.

APPROVAL DOCUMENT: Drawing No. **W98–55,** titled "Series 2500/ RW 4–5 XHP Alum. Horiz. Sld. Wdw. (N.I.)", sheets 1 through 8 of 8, dated 7/29/1998, with revision "**E**" dated 10/26/2011, prepared by Al–Farooq Corporation, signed, sealed and dated 12/07/2011 by Javad Ahmad, P. E., bearing the Miami–Dade County Product Control Revision stamp with the Notice of Acceptance number and Expiration date by the Miami–Dade County Product Control Section.

MISSILE IMPACT RATING: None.

LIMITATIONS:

Miami–Dade County Product Control Approved External Shutters Or Protective Devices Shall Be Required.

LABELING: Each unit shall bear a permanent label with the manufacturer's name or logo, city, state, model/ series and following statement: "Miami–Dade County Product Control Approved" unless otherwise noted herein.

RENEWAL of this NOA shall be considered after a renewal application has been filed and there has been no change in the applicable building code negatively affecting the performance of this product.

TERMINATION of this NOA will occur after the expiration date or if there has been a revision or change in the materials, use, and/or manufacture of the product or process. Misuse of this NOA as an endorsement of any product, for sales, advertising or any other purposes shall automatically terminate this NOA. Failure to comply with any section of this NOA shall be cause for termination and removal of NOA.

ADVERTISEMENT: The NOA number preceded by the words Miami–Dade County, Florida, and followed by the expiration date may be displayed in advertising literature. If any portion of the NOA is displayed, then it shall be done in its entirety.

INSPECTION: A copy of this entire NOA shall be provided to the user by the manufacturer or its distributors and shall be available for inspection at the job site at the request of the Building Official.

This NOA **renews and revises NOA No. 06–0605.02** and consists of this page 1, evidence pages E–1 and E–2, as well as approval document mentioned above.

The submitted documentation was reviewed by **Jaime D. Gascon, P. E.**

MIAMI-DADE COUNTY APPROVED

J. Gascon 12/8/11

NOTICE OF ACCEPTANCE: EVIDENCE SUBMITTED

A. DRAWINGS

1. Manufacturer's die drawings and sections.
2. Drawing No. **W98–55,** titled "Series 2500/ RW 4–5 XHP Alum. Horiz. Sld. Wdw. (N.I.)", sheets 1 through 8 of 8, dated 7/29/1998, with revision "**E**" dated 10/26/2011, prepared by Al–Farooq Corporation, signed, sealed and dated 12/07/2011 by Javad Ahmad, P. E.

B. TESTS

1. Test reports on: 1) Air Infiltration Test, per FBC, TAS 202–94
   2) Uniform Static Air Pressure Test, Loading per FBC, TAS 202–94
   3) Water Resistance Test, per FBC, TAS 202–94
   4) Forced Entry Test, per FBC 2411 3.2.1, TAS 202–94

   along with marked–up drawings and installation diagram of a Horizontal Sliding Window, prepared by Certified Testing Laboratories, Inc., Test Report No. **CTLA–2023W**, dated 05/28/2010, signed and sealed by Ramesh C. Patel, P. E.
2. Test reports on: 1) Air Infiltration Test, per SFBC, PA 202–94
   2) Uniform Static Air Pressure Test, per SFBC PA 202–94
   3) Water Resistance Test, per SFBC, PA 202–94
   4) Forced Entry Test, per SFBC, PA 202–94

   along with marked–up drawings and installation diagram of a Horizontal Sliding Window, glazed with 3/16" ann. glass, prepared by Fenestration Testing Laboratory, Inc., Test Report No. **FTL–2071**, dated 06/25/1998, signed and sealed by Gilbert Diamond, P. E.

   (Submitted under previous NOA No.98–1009.02)
3. Test reports on: 1) Air Infiltration Test, per SFBC, PA 202–94
   2) Uniform Static Air Pressure Test, per SFBC, PA 202–94

   along with marked–up drawings and installation diagram of a Horizontal Sliding Window, glazed with 3/16" ann. glass, prepared by Fenestration Testing Laboratory, Inc., Test Report No. **FTL–2070**, dated 06/25/1998, signed and sealed by Gilbert Diamond, P. E.

   (Submitted under previous NOA No.98–1009.02)

C. CALCULATIONS

1. Anchor verification calculations and structural analysis, complying with FBC–2007 and FBC–2010, prepared by Al–Farooq Corporation, dated 03/25/2011, signed, sealed and dated 12/07/2011 by Javad Ahmad, P. E.
2. **Glazing complies with ASTM E1300–04**

Jaime D. Gascon, P. E.
Product Control Section Supervisor
NOA No. 11–0330.02
Expiration Date: December 24, 2016
Approval Date: December 15, 2011

NOTICE OF ACCEPTANCE: EVIDENCE SUBMITTED

D. QUALITY ASSURANCE

1. Miami–Dade Department of Permitting, Environment, and Regulatory Affairs (PERA).

E. MATERIAL CERTIFICATIONS

1. None.

F. STATEMENTS

1. Statement letter of conformance and compliance with the FBC–2010, 12/07/2011, signed and sealed by Javad Ahmad, P. E.
2. Statement letter of no financial interest, conformance and compliance with the FBC–2007, dated 08/24/2011, signed and sealed by Javad Ahmad, P. E.
3. Letter of *Adoption of as his Own, the Work of another Engineer* per Section 61G15–27 of the FBPE, dated 12/08/2011 signed and sealed by Javad Ahmad, P. E.
4. Proposal No. **09–1194** issued by Product Control, dated 09/29/2009, signed by Renzo Narciso.
5. Asset purchase agreement dated 12/30/2009, signed by Mr. Kevin P. O'Meara and Mr. Phil Ragona.
6. Laboratory compliance letter for Test Report No. **CTLA–2023W**, issued by Certified Testing Laboratories, Inc., dated 05/28/10, signed and sealed by Ramesh C. Patel, P. E.
7. Laboratory compliance letter for Test Reports No.'s **FTL–2070** and **FTL–2071**, issued by Fenestration Testing Laboratory, Inc., dated 06/25/1998, signed and sealed by Gilbert Diamond, P. E.
   (Submitted under previous NOA No.98–1009.02)

G. OTHERS

1. Notice of Acceptance No. **06–0605.02**, issued to Kinco Windows & Door for their Series "RW – XHP Aluminum Horizontal Sliding Window – N.I.", approved on 02/01/2007 and expiring on 12/24/2011.

Jaime D. Gascon, P. E.
Product Control Section Supervisor
NOA No. 11–0330.02
Expiration Date: December 24, 2016
Approval Date: December 15, 2011

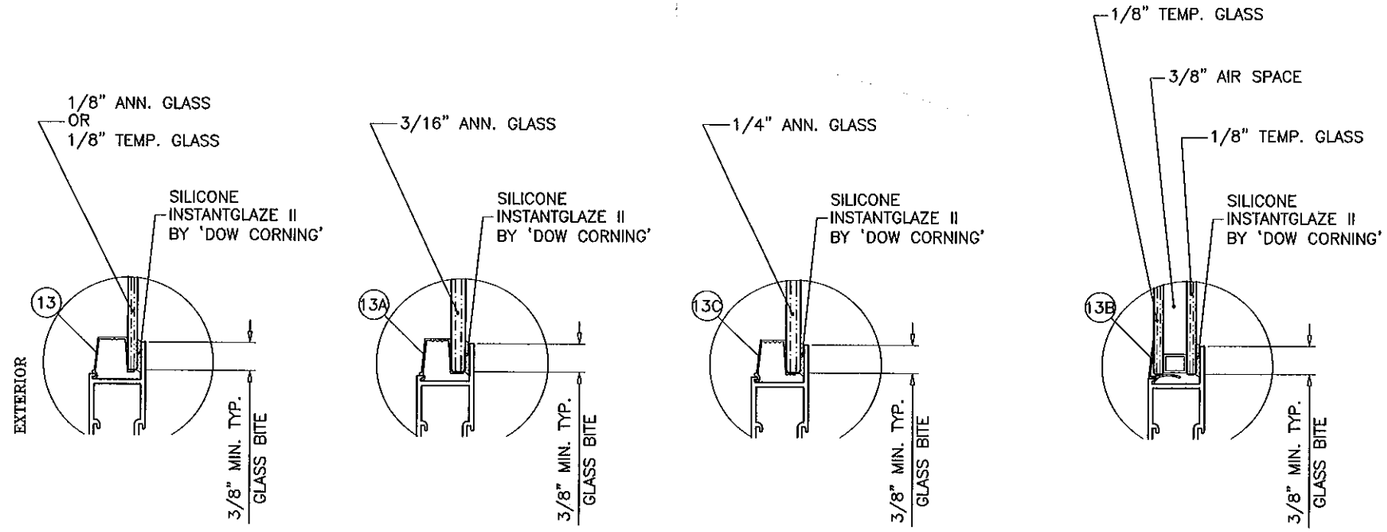

GLAZING OPTIONS

SERIES 2500/RW4-5 XHP
ALUMINUM HORIZONTAL SLIDING WINDOW

DESIGN LOAD RATINGS FOR THESE WINDOWS TO BE AS PER CHARTS SHOWN ON SHEET 3.

APPROVAL APPLIES TO SINGLE UNITS OR SIDE BY SIDE COMBINATIONS OF H.R./H.R. OR HORIZONTAL ROLLING WITH OTHER WINDOW TYPES IN MODULES OF TWO OR MORE WINDOWS USING MIAMI-DADE COUNTY/HVHZ APPROVED MULLIONS IN BETWEEN. LOWER DESIGN PRESSURE FROM WINDOWS OR MULLION APPROVAL WILL APPLY TO ENTIRE SYSTEM.

THIS PRODUCT HAS BEEN DESIGNED AND TESTED TO COMPLY WITH THE REQUIREMENTS OF THE FLORIDA BUILDING CODE 2007/2010 EDITION INCLUDING HIGH VELOCITY HURRICANE ZONE (HVHZ).

WOOD BUCKS BY OTHERS, MUST BE ANCHORED PROPERLY TO TRANSFER LOADS TO THE STRUCTURE.

ANCHORS SHALL BE AS LISTED, SPACED AS SHOWN ON DETAILS, ANCHORS EMBEDMENT TO BASE MATERIAL SHALL BE BEYOND WALL DRESSING OR STUCCO.

ANCHORING OR LOADING CONDITIONS NOT SHOWN IN THESE DETAILS ARE NOT PART OF THIS APPROVAL.

A LOAD DURATION INCREASE IS USED IN DESIGN OF ANCHORS INTO WOOD ONLY.

MATERIALS INCLUDING BUT NOT LIMITED TO STEEL/METAL SCREWS, THAT COME INTO CONTACT WITH OTHER DISSIMILAR MATERIALS SHALL MEET THE REQUIREMENTS OF 2007/2010 FLORIDA BLDG. CODE SECTION 2003.8.4.

WINDOWS NOT RATED FOR IMPACT.

INSTALLATION OF THIS PRODUCT IN THE HVHZ AREA REQUIRES THE USE OF APPROVED SHUTTERS OR EXTERNAL PROTECTION DEVICES COMPLYING WITH HVHZ REQUIREMENTS.

INSTALLATION OF THIS SYSTEM OUTSIDE THE HVHZ AREA SHALL MEET THE APPLICABLE REQUIREMENTS FOR WIND BORNE DEBRIS PROTECTION.

Engr: JAVAD AHMAD
CIVIL
FLA. PE # 70592
G.A.N. 3538

DEC 07 2011

PRODUCT REVISED
as complying with the Florida Building Code
Acceptance No 11-0330.02
Expiration Date 12/24/2016
By
Miami-Dade Product Control

AL-FAROOQ CORPORATION
ENGINEERS & PRODUCT DEVELOPMENT
1235 S.W. 87 AVE
MIAMI, FLORIDA 33174
TEL. (305) 264-8100 FAX. (305) 262-6978

COMP-ANL\W98-55KL

SERIES 2500/RW4-5 XHP ALUM. HORIZ. SLD. WDW. (N.I.)

ATRIUM COMPANIES, INC.
9001 AMBASSADOR ROW
DALLAS, TX. 75247
TEL. (214) 637-2696 FAX. (214) 424-6734

revisions:

no	date	by	description
B	05.23.06		UPDATED FOR 2004 FBC
C	07.25.06		REV. PER BCCO COMMENTS
D	08.11.10		GENERAL REVISION
E	10.26.11		REV. PER BNC COMMENTS

date: 07-29-98
scale: 1/2"=1'-0"
dr. by: HAMID
chk. by:

drawing no.
W98-55

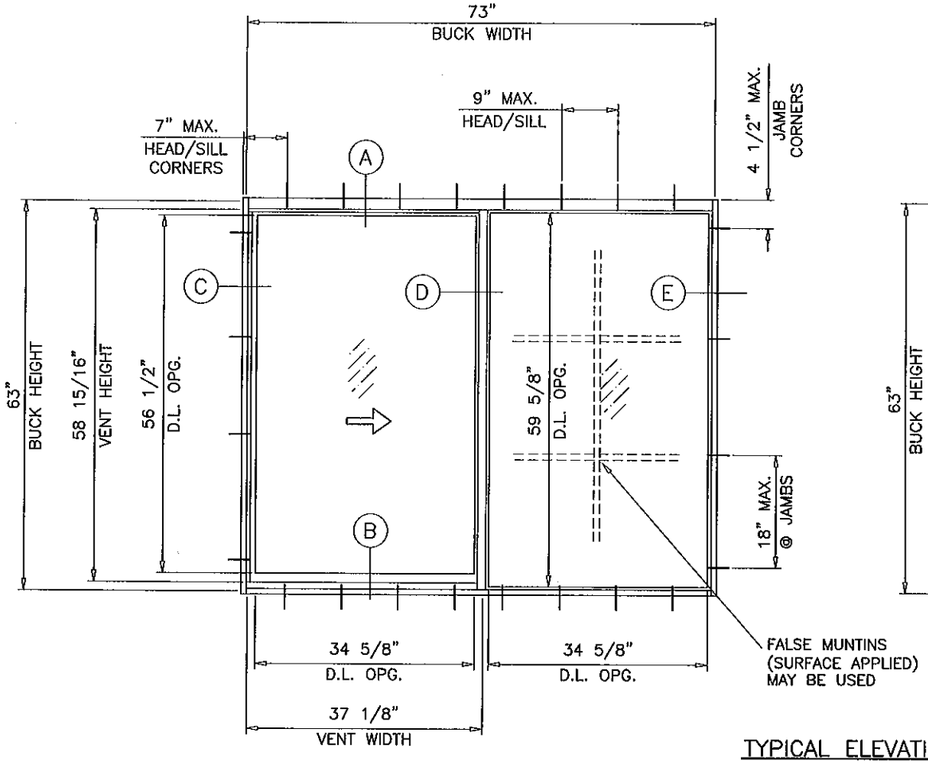

TYPICAL ELEVATIONS

FLANGE FRAMES

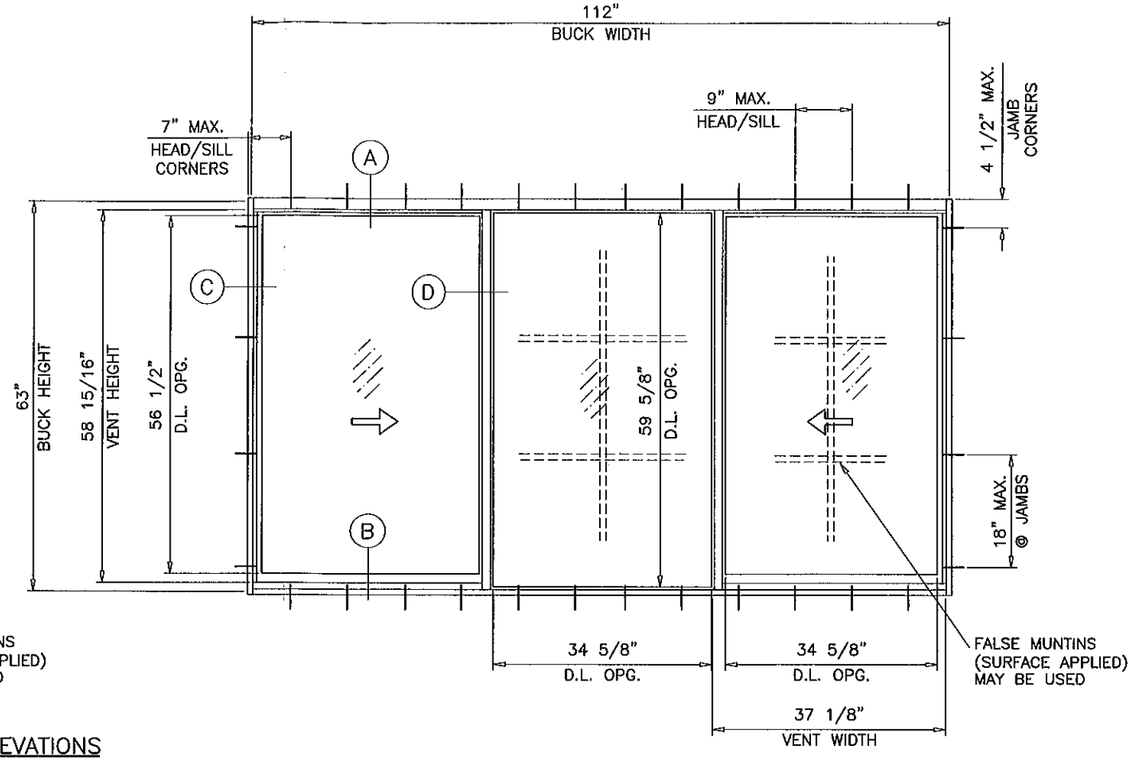

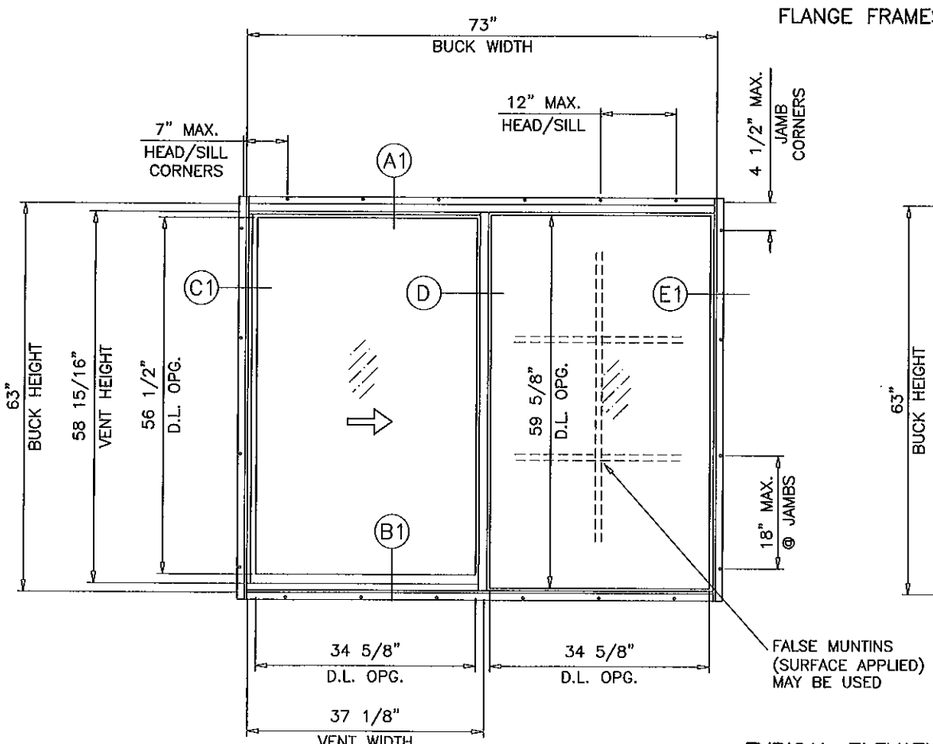

TYPICAL ELEVATIONS

FIN FRAMES

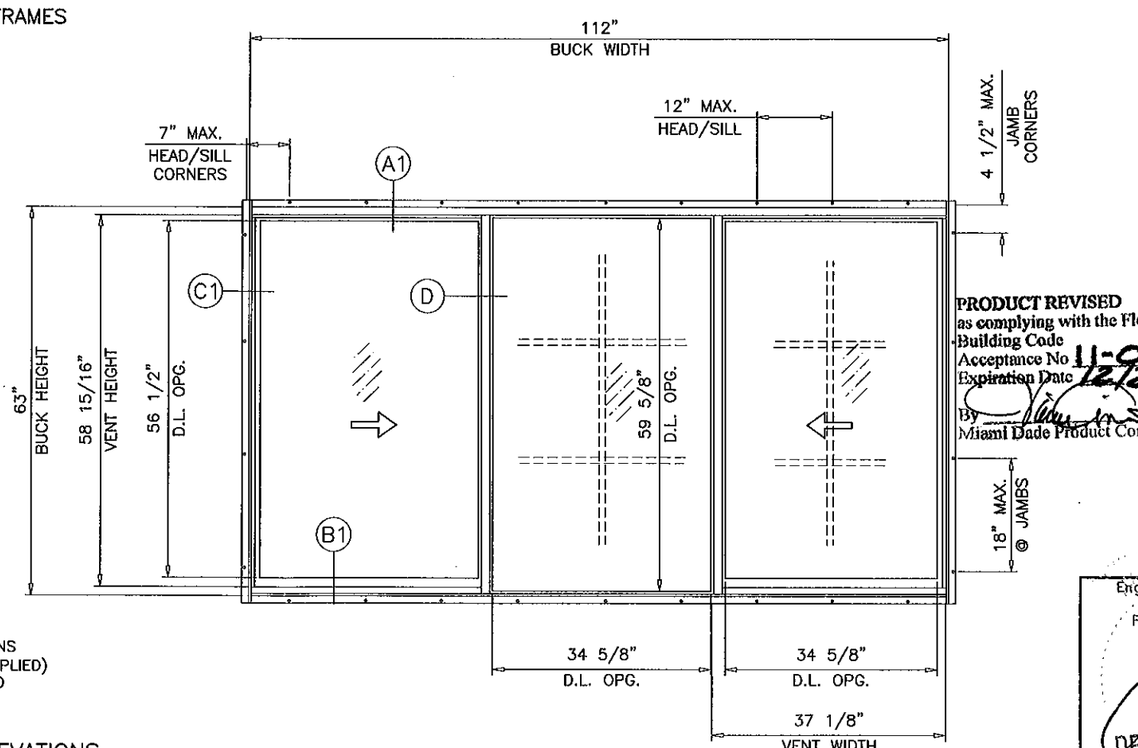

PRODUCT REVISED
as complying with the Florida
Building Code
Acceptance No 11-0330.02
Expiration Date 12/24/2016
By
Miami Dade Product Control

Engr: JAVAD AHMAD
CIVIL
FLA. PE # 70592
C.A.N. 3538

DEC 07 2011

AL-FAROOQ CORPORATION
ENGINEERS & PRODUCT DEVELOPMENT
1235 S.W. 87 AVE
MIAMI, FLORIDA 33174
TEL. (305) 264-8100 FAX. (305) 262-6978
COMP-ANL\W98-55KL

SERIES 2500/RW4-5 XHP ALUM. HORIZ. SLD. WDW. (N.I.)

ATRIUM COMPANIES, INC.
9001 AMBASSADOR ROW
DALLAS, TX. 75247
TEL. (214) 637-2696 FAX. (214) 424-6734

revisions:

no	date	by	description
D	08.11.10		GENERAL REVISION
E	10.26.11		REV. PER BNC COMMENTS

date: 07-29-98
scale: 1/2"=1'-0"
dr. by: HAMID
chk. by:

drawing no.
W98-55

DESIGN LOAD CAPACITY - PSF
XO OR OX SIZES

BUCK DIMS.		DSB ANN. GLASS		3/16" ANN. GLASS		1/4" ANN. GLASS		1/8" TEMP. GLASS 1/8" INSUL. TEMP. GL.	
WIDTH	HEIGHT	EXT.(+)	INT.(−)	EXT.(+)	INT.(−)	EXT.(+)	INT.(−)	EXT.(+)	INT.(−)
25"	25" (2)	55.0	78.4	55.0	125.0	55.0	140.0	55.0	140.0
37"		55.0	78.4	55.0	125.0	55.0	140.0	55.0	140.0
49"		55.0	78.4	55.0	125.0	55.0	140.0	55.0	140.0
61"		55.0	78.4	55.0	125.0	55.0	140.0	55.0	140.0
73"		55.0	63.4	55.0	116.6	55.0	140.0	55.0	140.0
25"	37" (3)	55.0	78.4	55.0	125.0	55.0	140.0	55.0	140.0
37"		55.0	72.6	55.0	125.0	55.0	140.0	55.0	140.0
49"		55.0	64.4	55.0	116.2	55.0	122.8	55.0	122.8
61"		55.0	57.2	55.0	96.4	55.0	112.3	55.0	112.3
73"		–	–	55.0	80.6	55.0	105.0	55.0	108.8
25"	49" (4)	55.0	78.4	55.0	125.0	55.0	139.4	55.0	139.4
37"		55.0	55.0	55.0	101.3	55.0	101.3	55.0	101.3
49"		43.0	43.0	55.0	82.0	55.0	82.7	55.0	82.7
61"		–	–	55.0	69.6	55.0	72.4	55.0	72.4
73"		–	–	55.0	63.2	55.0	66.4	55.0	66.4
25"	61" (4)	55.0	57.2	55.0	108.8	55.0	108.8	55.0	108.8
37"		39.4	39.4	55.0	77.8	55.0	77.8	55.0	77.8
49"		–	–	55.0	62.4	55.0	62.4	55.0	62.4
61"		–	–	51.7	51.7	53.4	53.4	53.4	53.4
73"		–	–	47.7	47.7	47.7	47.7	47.7	47.7
26-1/2"	26" (2)	55.0	78.4	55.0	125.0	55.0	140.0	55.0	140.0
37"		55.0	78.4	55.0	125.0	55.0	140.0	55.0	140.0
53-1/8"		55.0	78.4	55.0	125.0	55.0	140.0	55.0	140.0
74"		55.0	61.4	55.0	110.6	55.0	140.0	55.0	140.0
26-1/2"	38-3/8" (3)	55.0	78.4	55.0	125.0	55.0	140.0	55.0	140.0
37"		55.0	69.2	55.0	125.0	55.0	138.2	55.0	138.2
53-1/8"		55.0	59.6	55.0	103.9	55.0	111.7	55.0	111.7
74"		–	–	55.0	76.8	55.0	99.6	55.0	101.3
26-1/2"	50-5/8" (4)	55.0	78.4	55.0	125.0	55.0	127.8	55.0	127.8
37"		54.0	54.0	55.0	97.3	55.0	97.3	55.0	97.3
53-1/8"		–	–	55.0	73.0	55.0	75.1	55.0	75.1
74"		–	–	55.0	60.5	55.0	62.7	55.0	62.7
26-1/2"	63" (4)	49.1	49.1	55.0	99.7	55.0	99.7	55.0	99.7
37"		35.7	35.7	55.0	74.9	55.0	74.9	55.0	74.9
53-1/8"		–	–	55.0	56.4	55.0	56.4	55.0	56.4
74"		–	–	45.2	45.2	45.2	45.2	45.2	45.2

NO. IN PARENTHESIS INDICATE NUMBER OF ANCHORS PER JAMB.

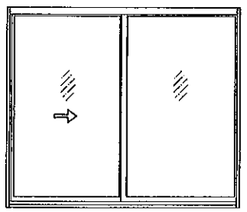

XO

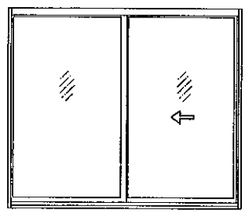

OX

DESIGN LOAD CAPACITY - PSF
XOX SIZES

BUCK DIMS.		DSB ANN. GLASS		3/16" ANN. GLASS		1/4" ANN. GLASS		1/8" TEMP. GLASS 1/8" INSUL. TEMP. GL.	
WIDTH	HEIGHT	EXT.(+)	INT.(−)	EXT.(+)	INT.(−)	EXT.(+)	INT.(−)	EXT.(+)	INT.(−)
73"	25" (2)	55.0	96.3	55.0	125.0	55.0	140.0	55.0	140.0
85"		55.0	85.8	55.0	125.0	55.0	140.0	55.0	140.0
97"		55.0	74.8	55.0	125.0	55.0	140.0	55.0	140.0
109"		55.0	64.5	55.0	118.5	55.0	140.0	55.0	140.0
112"		55.0	62.2	55.0	114.8	55.0	140.0	55.0	140.0
73"	37" (3)	55.0	64.9	55.0	118.4	55.0	120.9	55.0	120.9
85"		55.0	60.7	55.0	103.8	55.0	114.1	55.0	114.1
97"		55.0	55.0	55.0	92.0	55.0	110.6	55.0	110.6
109"		–	–	55.0	81.4	55.0	106.1	55.0	108.8
112"		–	–	55.0	80.0	55.0	103.9	55.0	108.8
73"	49" (4)	43.3	43.3	55.0	83.1	55.0	83.1	55.0	83.1
85"		–	–	55.0	73.2	55.0	75.5	55.0	75.5
97"		–	–	55.0	67.8	55.0	70.2	55.0	70.2
109"		–	–	55.0	63.7	55.0	66.5	55.0	66.5
112"		–	–	55.0	62.7	55.0	65.8	55.0	65.8
73"	61" (4)	–	–	55.0	62.7	55.0	62.7	55.0	62.7
85"		–	–	55.0	55.6	55.0	56.1	55.0	56.1
97"		–	–	50.3	50.3	51.4	51.4	51.4	51.4
109"		–	–	47.9	47.9	47.9	47.9	47.9	47.9
112"		–	–	47.1	47.1	47.1	47.1	47.1	47.1
73"	63" (4)	–	–	55.0	60.2	55.0	60.2	55.0	60.2
85"		–	–	53.6	53.6	53.8	53.8	53.8	53.8
97"		–	–	48.1	48.1	49.2	49.2	49.2	49.2
109"		–	–	45.7	45.7	45.7	45.7	45.7	45.7
112"		–	–	45.0	45.0	45.0	45.0	45.0	45.0
74"	26" (2)	55.0	91.9	55.0	125.0	55.0	140.0	55.0	140.0
111"		55.0	62.2	55.0	111.9	55.0	140.0	55.0	140.0
74"	38-3/8" (3)	55.0	61.4	55.0	111.9	55.0	115.3	55.0	115.3
111"		–	–	55.0	77.6	55.0	100.6	55.0	101.3
74"	50-5/8" (4)	41.2	41.2	55.0	78.9	55.0	78.9	55.0	78.9
111"		–	–	55.0	60.9	55.0	62.7	55.0	62.7
74"	63" (4)	–	–	55.0	59.6	55.0	59.6	55.0	59.6
111"		–	–	45.2	45.2	45.2	45.2	45.2	45.2

NO. IN PARENTHESIS INDICATE NUMBER OF ANCHORS PER JAMB.

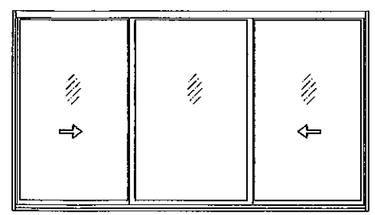

XOX

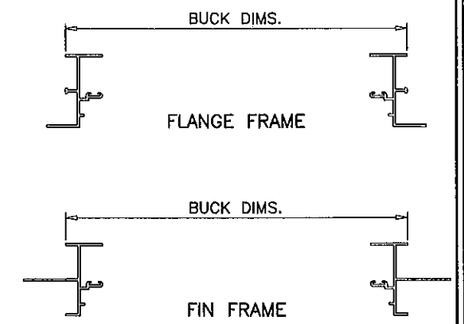

NOTE:
GLASS CAPACITIES ON THIS SHEET ARE BASED ON ASTM E1300-04 (3 SEC. GUSTS) AND FLORIDA BUILDING COMMISSION DECLARATORY STATEMENT DCA05-DEC-219

Engr: JAVAD, AHMAD
CIVIL
FLA. PE #: 70592
C.A.N: 3538

DEC 07 2011

PRODUCT REVISED
is complying with the Florida Building Code
Acceptance No 11-0330.02
Expiration Date 12/24/2016
By
Miami Dade Product Control

AL-FAROOQ CORPORATION
ENGINEERS & PRODUCT DEVELOPMENT
1235 S.W. 87 AVE
MIAMI, FLORIDA 33174
TEL. (305) 264-8100 FAX. (305) 262-6978
COMP-ANL\W98-55KL

SERIES 2500/RW4-5 XHP ALUM. HORIZ. SLD. WDW. (N.I.)

ATRIUM COMPANIES, INC.
9001 AMBASSADOR ROW
DALLAS, TX. 75247
TEL. (214) 637-2696 FAX. (214) 424-6734

revisions:

no	date	by	description
B	05.23.06		UPDATED FOR 2004 FBC
C	07.25.06		REV. PER BCCO COMMENTS
D	08.11.10		GENERAL REVISION
E	10.26.11		REV. PER BNC COMMENTS

date: 07-29-98
scale: 1/2"=1'-0"
dr. by: HAMID
chk. by:

drawing no.
W98-55

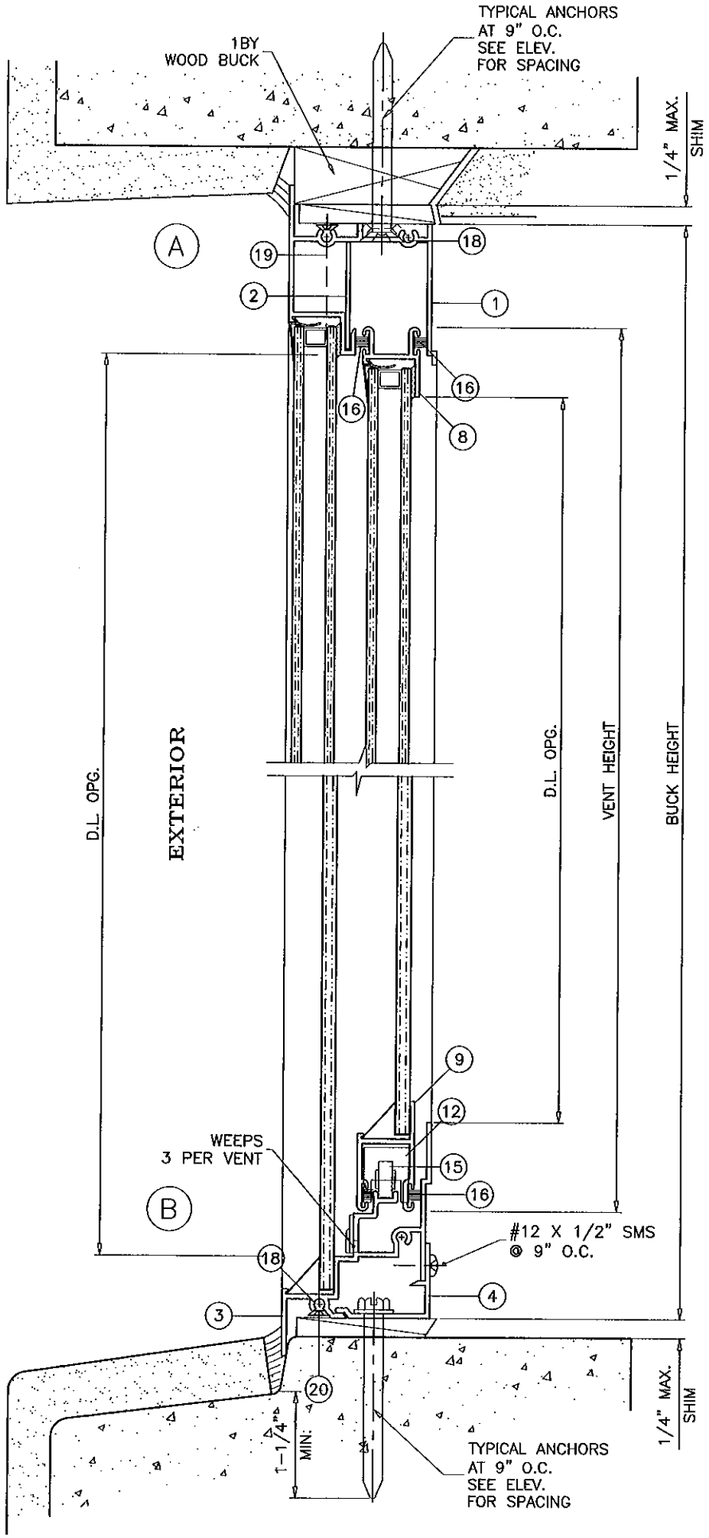

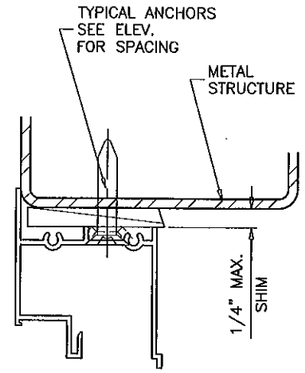

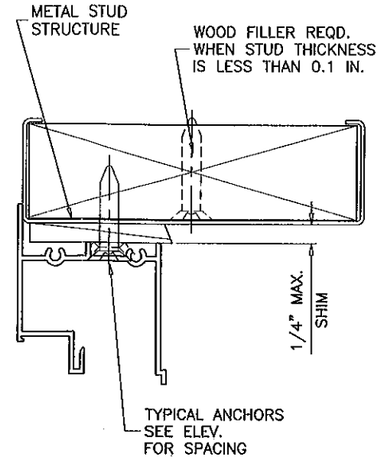

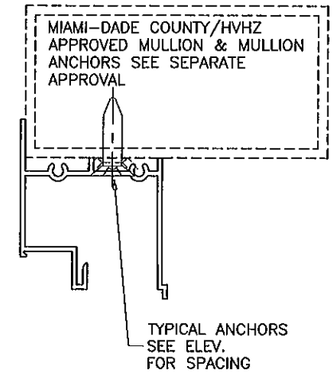

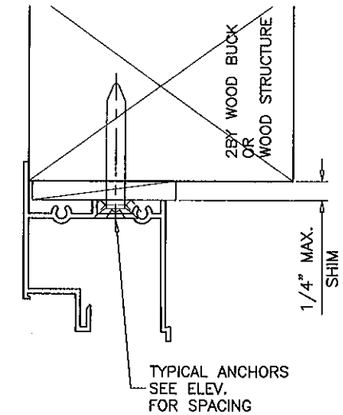

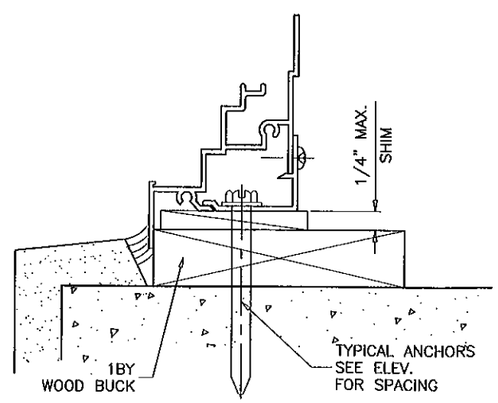

WOOD BUCKS, METAL STUDS AND METAL STRUCTURE NOT BY ATRIUM MUST SUSTAIN LOADS IMPOSED BY GLAZING SYSTEM AND TRANSFER THEM TO THE BUILDING STRUCTURE.

TYPICAL ANCHORS: SEE ELEV. FOR SPACING

1/4" DIA. TAPCON BY 'ITW' (Fu=120 KSI, Fy=92 KSI)

1/4" DIA. ULTRACON BY 'ELCO' (Fu=177 KSI, Fy=155 KSI)

INTO 2BY WOOD BUCKS OR WOOD STRUCTURES
1-3/8" MIN. PENETRATION INTO WOOD

THRU 1BY BUCKS INTO CONC. OR MASONRY
1-1/4" MIN. EMBED INTO CONC. OR MASONRY

DIRECTLY INTO CONC. OR MASONRY
1-1/4" MIN. EMBED INTO CONC. OR MASONRY

#14 SMS OR SELF DRILLING SCREWS (GRADE 2 CRS)
INTO METAL STRUCTURES

STEEL : 1/8" THK. MIN. (Fy = 36 KSI MIN.)
ALUMINUM : 1/8" THK. MIN. (6063-T5 MIN.)
(STEEL IN CONTACT WITH ALUMINUM TO BE PLATED OR PAINTED)

#14 SMS OR SELF DRILLING SCREWS

INTO MIAMI-DADE COUNTY/HVHZ APPROVED MULLIONS (MIN. THK. = 1/8")
(NO SHIM SPACE)

TYPICAL EDGE DISTANCE

INTO CONCRETE AND MASONRY = 2-1/2" MIN.
INTO WOOD STRUCTURE = 1" MIN.
INTO METAL STRUCTURE = 3/4" MIN.

CONCRETE AT HEAD, SILL OR JAMBS f'c = 3000 PSI MIN.
C-90 HOLLOW/FILLED BLOCK AT JAMBS f'm = 2000 PSI MIN.

FLANGE FRAME WINDOW

Engr: JAVAD AHMAD
CIVIL
FLA. PE # 70592
C.A.N. 3538

DEC 07 2011

PRODUCT REVISED
as complying with the Florida
Building Code
Acceptance No 11-0330.02
Expiration Date 12/12/2016
By
Miami Dade Product Control

AL-FAROOQ CORPORATION
ENGINEERS & PRODUCT DEVELOPMENT
1235 S.W. 87 AVE
MIAMI, FLORIDA 33174
TEL. (305) 264-8100 FAX. (305) 262-6978

COMP-ANL\W98-55KL

SERIES 2500/RW4-5 XHP ALUM. HORIZ. SLD. WDW. (N.I.)

ATRIUM COMPANIES, INC.
9001 AMBASSADOR ROW
DALLAS, TX. 75247
TEL. (214) 637-2696 FAX. (214) 424-6734

revisions:

no	date	by	description
B	05.23.06		UPDATED FOR 2004 FBC
C	07.25.06		REV. PER BCCO COMMENTS
D	08.11.10		GENERAL REVISION
E	10.26.11		REV. PER BNC COMMENTS

date: 07-29-98
scale: 1/2" = 1"
dr. by: HAMID
chk. by:

drawing no.
W98-55

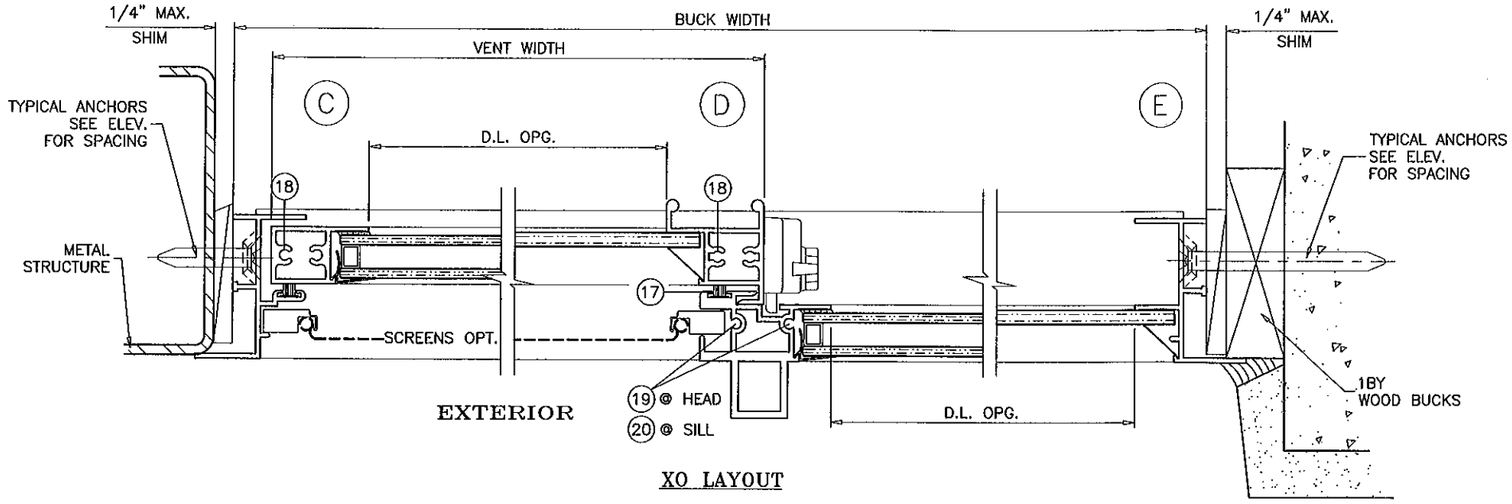

XO LAYOUT

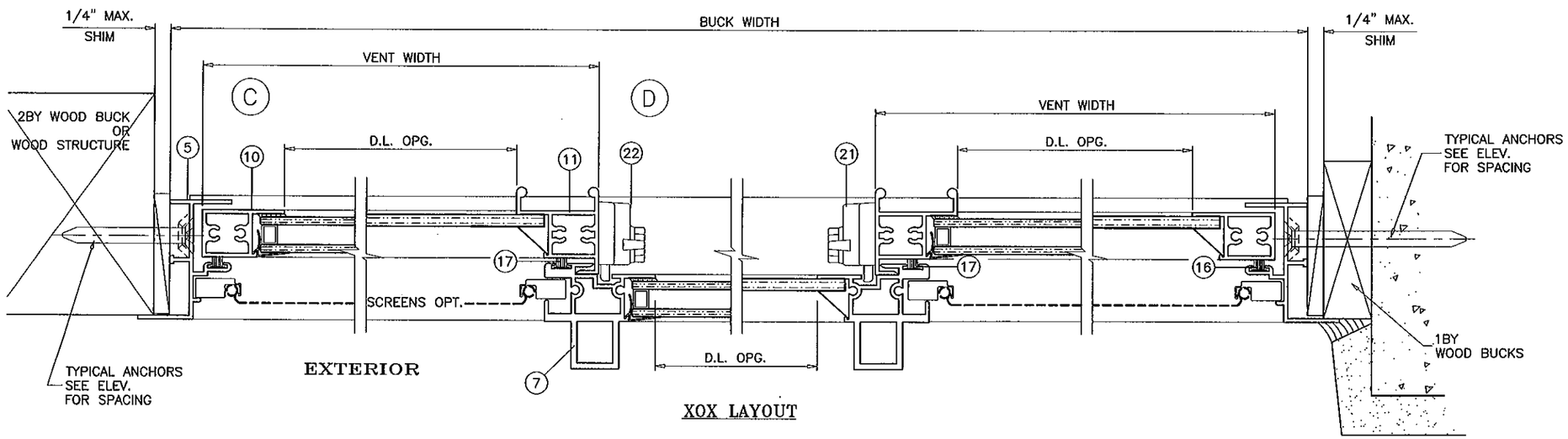

XOX LAYOUT

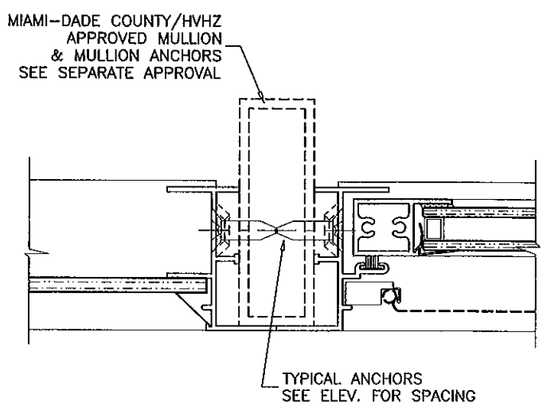

FLANGE FRAME WINDOW

Engr: JAVAD AHMAD
CIVIL
FLA. PE # 70592
C.A.N. 3538

DEC 07 2011

PRODUCT REVISED
as complying with the Florida
Building Code
Acceptance No 11-0330.02
Expiration Date 12/24/2016
By
Miami Dade Product Control

AL-FAROOQ CORPORATION
ENGINEERS & PRODUCT DEVELOPMENT
1235 S.W. 87 AVE
MIAMI, FLORIDA 33174
TEL. (305) 264-8100 FAX. (305) 262-6978

COMP-ANL\W98-55KL

SERIES 2500/RW4-5 XHP ALUM. HORIZ. SLD. WDW. (N.I.)

ATRIUM COMPANIES, INC.
9001 AMBASSADOR ROW
DALLAS, TX. 75247
TEL. (214) 637-2696 FAX. (214) 424-6734

revisions:

no	date	by	description
B	05.23.06		UPDATED FOR 2004 FBC
C	07.25.06		NO CHANGE THIS SHEET
D	08.11.10		GENERAL REVISION
E	10.26.11		REV. PER BNC COMMENTS

date: 07-29-98
scale: 1/2" = 1"
dr. by: HAMID
chk. by:

drawing no.
W98-55

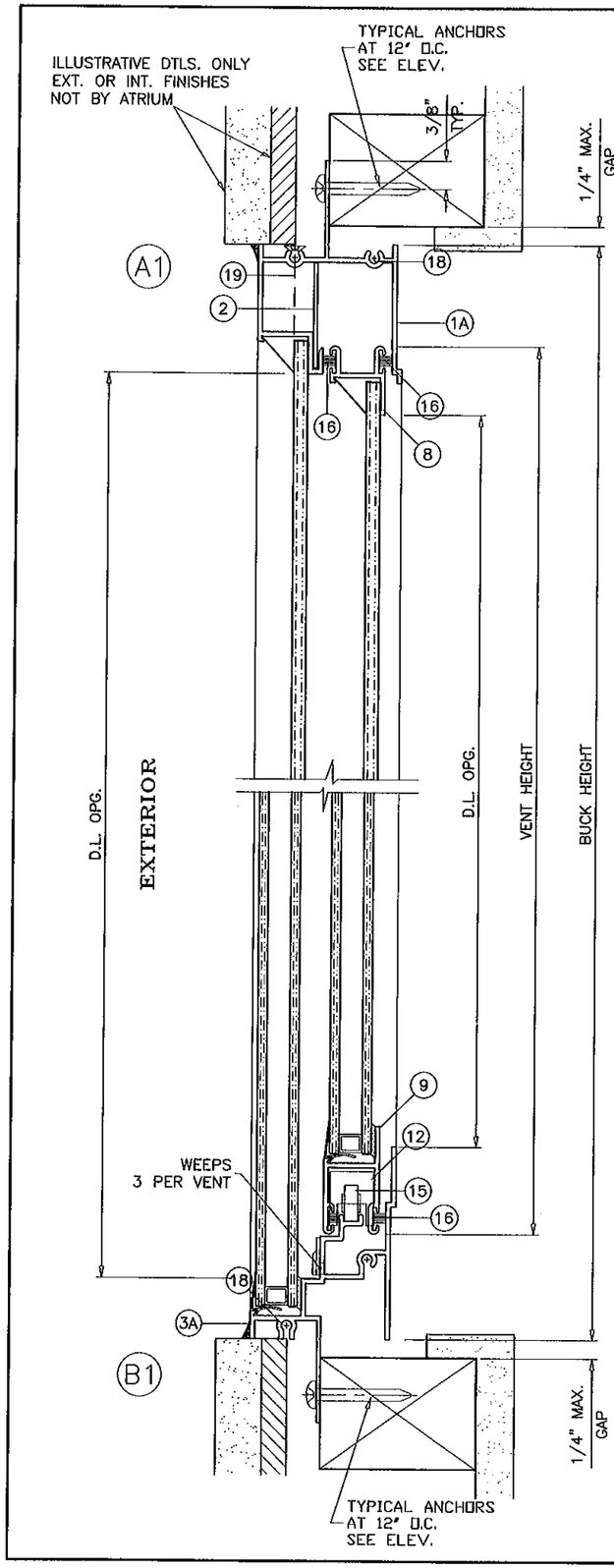

TYPICAL ANCHORS: SEE ELEV. FOR SPACING

#10 SMS

INTO 2BY WOOD BUCKS OR WOOD STRUCTURES
1-3/8" MIN. PENETRATION INTO WOOD

#10 SMS OR SELF DRILLING SCREWS

INTO MIAMI-DADE COUNTY/HVHZ APPROVED MULLIONS (MIN. THK. = 1/8")
(NO SHIM SPACE)

WOOD BUCKS, METAL STUDS AND METAL STRUCTURE NOT BY ATRIUM MUST SUSTAIN LOADS IMPOSED BY GLAZING SYSTEM AND TRANSFER THEM TO THE BUILDING STRUCTURE.

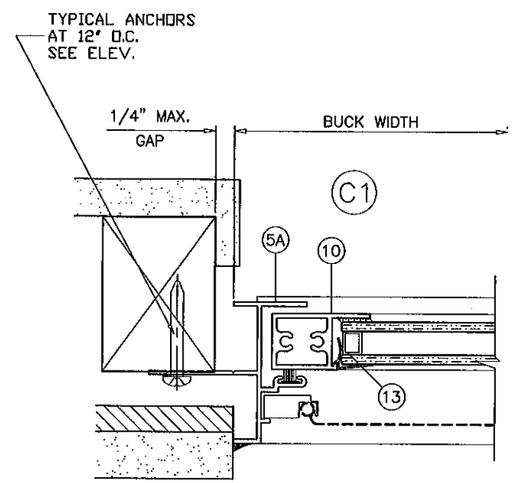

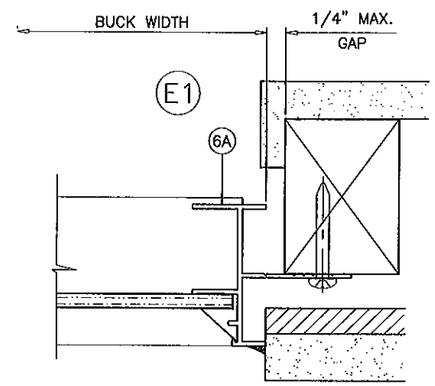

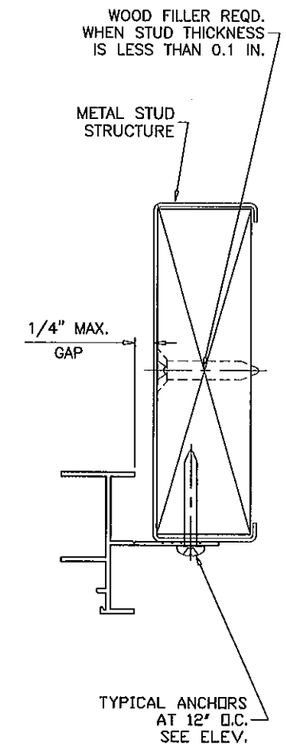

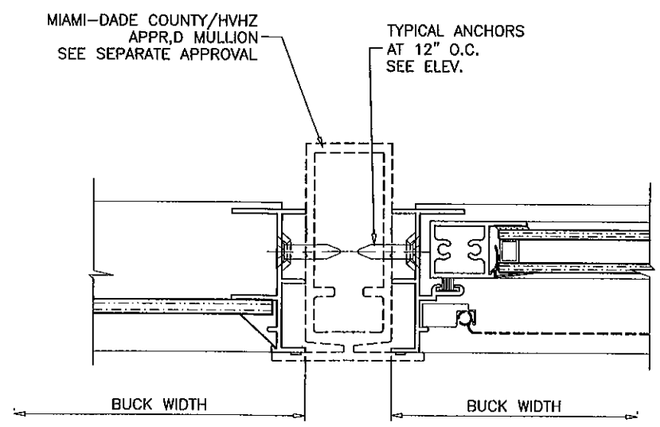

FIN FRAME WINDOW

Engr: JAVAD AHMAD
CIVIL
FLA. PE # 70592
C.A.N. 3538

DEC 07 2011

PRODUCT REVISED
as complying with the Florida
Building Code
Acceptance No 11-0330.02
Expiration Date 12/24/2016
By
Miami Dade Product Control

AL-FAROOQ CORPORATION
ENGINEERS & PRODUCT DEVELOPMENT
1235 S.W. 87 AVE
MIAMI, FLORIDA 33174
TEL. (305) 264-8100 FAX. (305) 262-6978
COMP-ANL\W98-55KL

SERIES 2500/RW4-5 XHP ALUM. HORIZ. SLD. WDW. (N.I.)

ATRIUM COMPANIES, INC.
9001 AMBASSADOR ROW
DALLAS, TX. 75247
TEL. (214) 637-2696 FAX. (214) 424-6734

revisions:

no	date	by	description
D	08.11.10		GENERAL REVISION
E	10.26.11		REV. PER BNC COMMENTS

date: 07-29-98
scale: 1/2" = 1"
dr. by: HAMID
chk. by:

drawing no.
W98-55

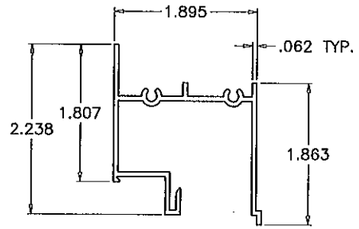

1 FRAME HEAD (FLANGE)

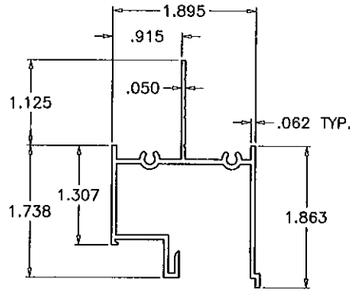

1A FRAME HEAD (FIN)

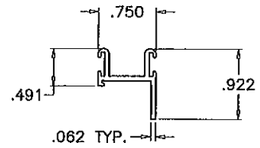

8 SASH TOP RAIL

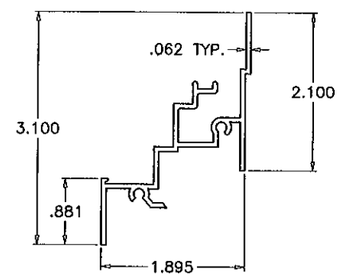

3 FRAME SILL (FLANGE)

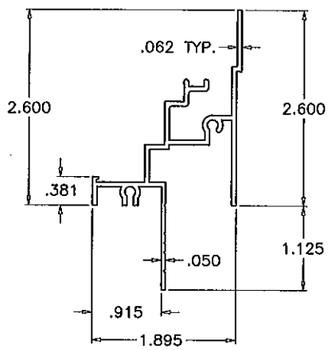

3A FRAME SILL (FIN)

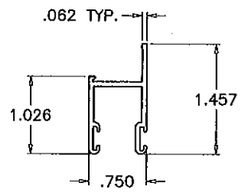

9 SASH BOTTOM RAIL

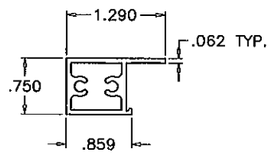

10 LEAD RAIL

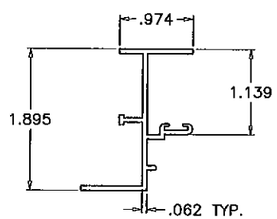

5 MOVING JAMB (FLANGE)

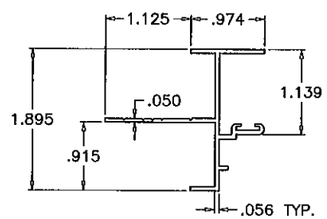

5A MOVING JAMB (FIN)

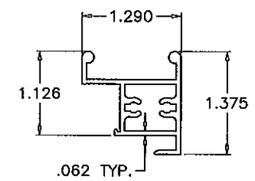

11 LOCK RAIL

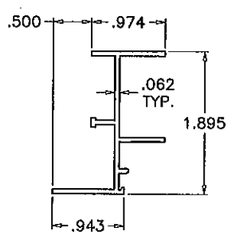

6 FIXED JAMB (FLANGE)

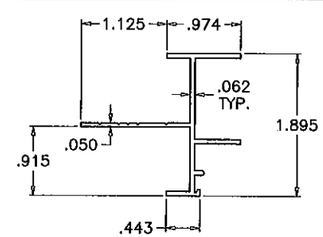

6A FIXED JAMB (FIN)

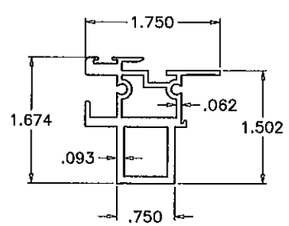

7 FIXED MTG. RAIL

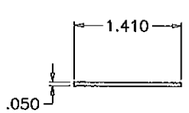

2 HEAD SPACER

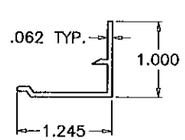

4 SUB SILL

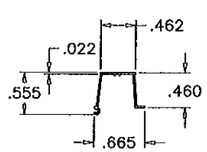

13 GLAZING BEAD PVC

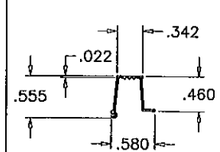

13A GLAZING BEAD PVC

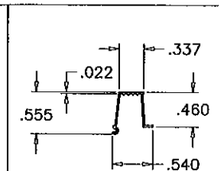

13C GLAZING BEAD PVC

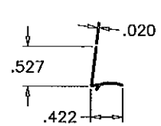

13B GLAZING BEAD PVC

ITEM	PART #	QUANTITY	DESCRIPTION	MATERIAL	MANF./SUPPLIER
1	10091	1	FRAME HEAD (FLANGE)	6063-T6	–
1A	10092	1	FRAME HEAD (FIN)	6063-T6	–
2	10143	1/VENT	HEAD SPACER, 2-7/16" LONG AT FIXED RAIL	6063-T6	–
3	10095	1	FRAME SILL (FLANGE)	6063-T6	–
3A	10094	1	FRAME SILL (FIN)	6063-T6	–
4	10144	1	FRAME SUB SILL	6063-T6	–
5	10085	1	FRAME MOVING JAMB (FLANGE)	6063-T6	–
5A	10087	1	FRAME MOVING JAMB (FIN)	6063-T6	–
6	10086	1	FRAME FIXED JAMB (FLANGE)	6063-T6	–
6A	10134	1	FRAME FIXED JAMB (FIN)	6063-T6	–
7	10096	1/ VENT	FIXED MTG. STILE	6063-T6	–
8	10135	1/ VENT	VENT TOP RAIL	6063-T6	–
9	10136	1/ VENT	VENT BOTTOM RAIL	6063-T6	–
10	10088	1/ VENT	VENT SIDE RAIL	6063-T6	–
11	10089	1/ VENT	VENT LOCK STILE	6063-T6	–
12	L-015	2/ VENT	WHEEL HOUSING	–	HUGHES SUPPLY
13	1652-R	AS REQD.	GLAZING BEAD	PVC	DOW-TECH
13A	1653-R	AS REQD.	GLAZING BEAD	PVC	DOW-TECH
13B	1668-R	AS REQD.	GLAZING BEAD (INSUL. GLASS)	PVC	DOW-TECH
13C	1654-R	AS REQD.	GLAZING BEAD	PVC	DOW-TECH
14	421	2/ VENT	WHEEL AXLE	–	SAUNDERS ENG.
15	141	2/ VENT	WHEEL	BRASS	SAUNDERS ENG.
16	7518	AS REQD.	FIN-SEAL W' STRIP .270W X .310H	–	SCHLEGEL
17	7518	AS REQD.	FIN-SEAL W' STRIP .270W X .130H	–	SCHLEGEL
18	#8X5/8" SMS	AS REQD.	VENT AND FRAME ASSEMBLY SCREWS	–	–
19	#8X2" FH SMS	2/ STILE	HEAD TO FIXED STILE	–	–
20	#8X1" FH SMS	2/ STILE	SILL TO FIXED STILE	–	–
21	7538-169	1/ LOCK STILE	VENT LATCH R.H. AT MIDSPAN	ZINC CAST	ALLEN-STEVENS
22	7538-153	1/ LOCK STILE	VENT LATCH L.H. AT MIDSPAN	ZINC CAST	ALLEN-STEVENS

Engr: JAVAD AHMAD
CIVIL
FLA. PE # 70592
C.A.N. 3538

DEC 07 2011

PRODUCT REVISED
as complying with the Florida
Building Code
Acceptance No 11-0330.02
Expiration Date 12/24/2016
By
Miami Dade Product Control

AL-FAROOQ CORPORATION
ENGINEERS & PRODUCT DEVELOPMENT
1235 S.W. 87 AVE
MIAMI, FLORIDA 33174
TEL. (305) 264-8100 FAX. (305) 262-6978
COMP-ANL\W98-55KL

SERIES 2500/RW4-5 XHP ALUM. HORIZ. SLD. WDW. (N.I.)

ATRIUM COMPANIES, INC.
9001 AMBASSADOR ROW
DALLAS, TX. 75247
TEL. (214) 637-2696 FAX. (214) 424-6734

revisions:

no	date	by	description
B	05.23.06		UPDATED FOR 2004 FBC
C	07.25.06		NO CHANGE THIS SHEET
D	08.11.10		GENERAL REVISION
E	10.26.11		REV. PER BNC COMMENTS

date: 07-29-98
scale: 1/2" = 1"
dr. by: HAMID
chk. by:

drawing no.
W98-55

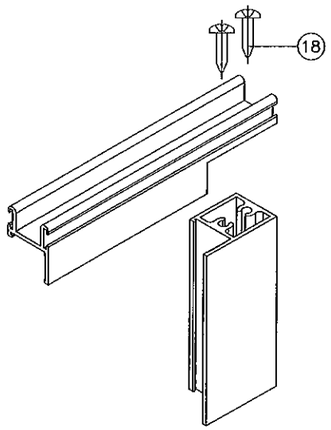

VENT TOP CORNER

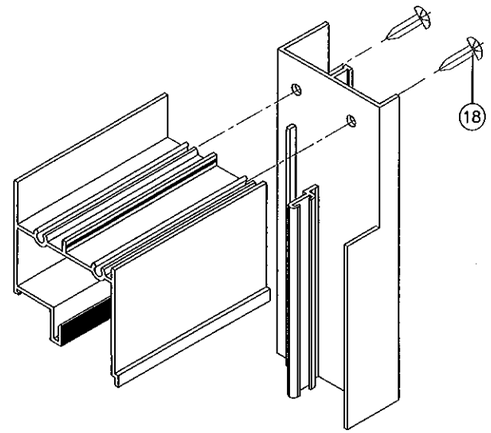

FLANGE FRAME TOP CORNER

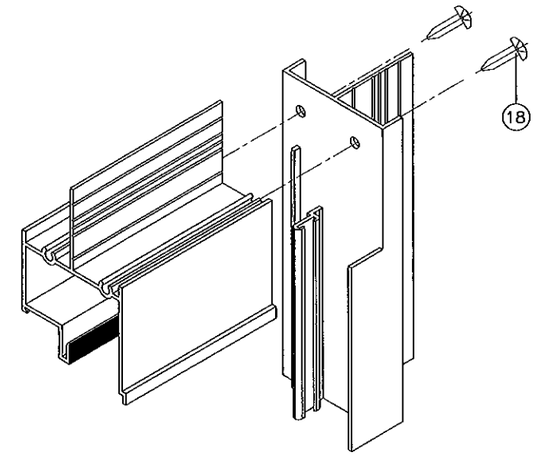

FIN FRAME TOP CORNER

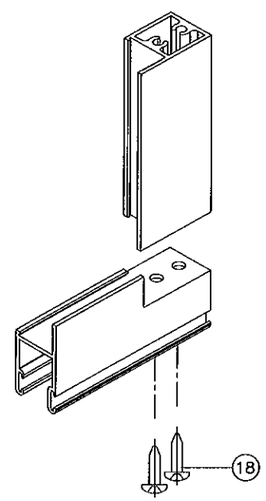

VENT BOTTOM CORNER

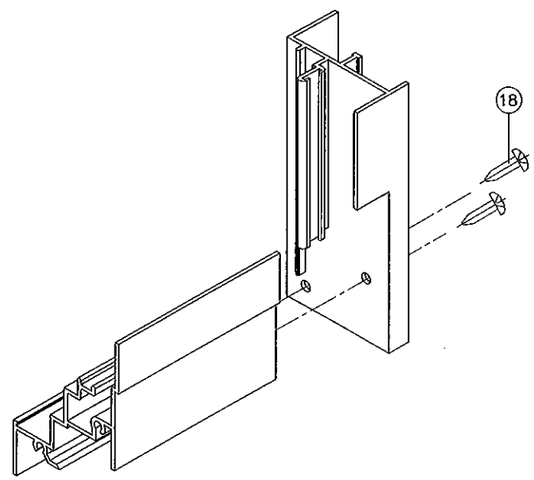

FLANGE FRAME BOTTOM CORNER

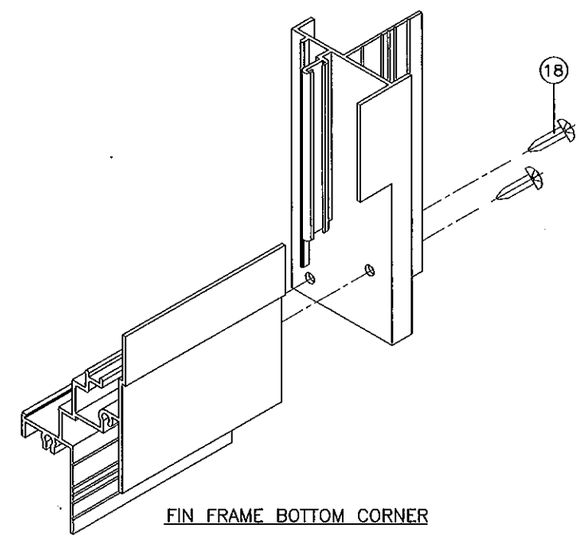

FIN FRAME BOTTOM CORNER

Engr: JAVAD AHMAD
CIVIL
FLA. PE. # 70592
C.A.N. 3538

DEC 07 2011

PRODUCT REVISED
as complying with the Florida
Building Code
Acceptance No 11-0330.02
Expiration Date 12/24/2016
By
Miami Dade Product Control

AL-FAROOQ CORPORATION
ENGINEERS & PRODUCT DEVELOPMENT
1235 S.W. 87 AVE
MIAMI, FLORIDA 33174
TEL. (305) 264-8100 FAX. (305) 262-6978

COMP-ANL\W98-55KL

SERIES 2500/RW4-5 XHP ALUM. HORIZ. SLD. WDW. (N.L.)

ATRIUM COMPANIES, INC.
9001 AMBASSADOR ROW
DALLAS, TX. 75247
TEL. (214) 637-2696 FAX. (214) 424-6734

revisions:

no	date	by	description
B	05.23.06		UPDATED FOR 2004 FBC
C	07.25.06		NO CHANGE THIS SHEET
D	08.11.10		GENERAL REVISION
E	10.26.11		REV. PER BNC COMMENTS

date: 07-29-98
scale: 1/2" = 1"
dr. by: HAMID
chk. by:

drawing no.
W98-55

sheet 8 of 8