BUILDING AND NEIGHBORHOOD COMPLIANCE DEPARTMENT (BNC)
BOARD AND CODE ADMINISTRATION DIVISION

MIAMI-DADE COUNTY, FLORIDA
PRODUCT CONTROL SECTION
11805 SW 26th Street, Room 208
MIAMI, FLORIDA 33175-2474
T (786) 315-2590 F (786) 315-2599
www.miamidade.gov/building

NOTICE OF ACCEPTANCE (NOA)

CGI Windows and Doors, INC.
10100 NW 25 Street
Miami, FL 33172

SCOPE:

This NOA is being issued under the applicable rules and regulations governing the use of construction materials. The documentation submitted has been reviewed and accepted by Miami-Dade County BNC-Product Control Section to be used in Miami-Dade County and other areas where allowed by the Authority Having Jurisdiction (AHJ).

This NOA shall not be valid after the expiration date stated below. The Miami-Dade County Product Control Section (In Miami-Dade County) and/or the AHJ (in areas other than Miami-Dade County) reserve the right to have this product or material tested for quality assurance purposes. If this product or material fails to perform in the accepted manner, the manufacturer will incur the expense of such testing and the AHJ may immediately revoke, modify, or suspend the use of such product or material within their jurisdiction. BNC reserves the right to revoke this acceptance, if it is determined by Miami-Dade County Product Control Section that this product or material fails to meet the requirements of the applicable building code. This product is approved as described herein, and has been designed to comply with the Florida Building Code, including the High Velocity Hurricane Zone.

DESCRIPTION: Series "Sentinel" Aluminum Unclipped Mullion – L.M.I.

APPROVAL DOCUMENT: Drawing No. **W10-01**, titled "**Series Sentinel Unclipped Alum. Mullion**", sheets 1 through 7 of 7, dated 04/02/10, prepared by Al-Farooq Corporation, signed, sealed and dated 07/29/10 by Javad Ahmad, P. E., bearing the Miami-Dade County Product Control Revision stamp with the Notice of Acceptance number and Expiration date by the Miami-Dade County Product Control Section.

MISSILE IMPACT RATING: Large and Small Missile Impact Resistant.

LABELING: Each unit shall bear a permanent label with the manufacturer's name or logo, city, state and following statement: "Miami-Dade County Product Control Approved", unless otherwise noted herein.

RENEWAL of this NOA shall be considered after a renewal application has been filed and there has been no change in the applicable building code negatively affecting the performance of this product.

TERMINATION of this NOA will occur after the expiration date or if there has been a revision or change in the materials, use, and/or manufacture of the product or process. Misuse of this NOA as an endorsement of any product, for sales, advertising or any other purposes shall automatically terminate this NOA. Failure to comply with any section of this NOA shall be cause for termination and removal of NOA.

ADVERTISEMENT: The NOA number preceded by the words Miami-Dade County, Florida, and followed by the expiration date may be displayed in advertising literature. If any portion of the NOA is displayed, then it shall be done in its entirety.

INSPECTION: A copy of this entire NOA shall be provided to the user by the manufacturer or its distributors and shall be available for inspection at the job site at the request of the Building Official.

This NOA **revises NOA No. 10-0510.14** and consists of this page 1, evidence pages E-1 and E-2, as well as approval document mentioned above.

The submitted documentation was reviewed by **Jaime D. Gascon, P. E.**

MIAMI-DADE COUNTY APPROVED

J. Gascon
5/2/11

CGI WINDOWS AND DOORS, INC.

NOTICE OF ACCEPTANCE: EVIDENCE SUBMITTED

A. DRAWINGS

1. Manufacturer's die drawings and sections.
2. Drawing No **W10–01**, titled Series "**Sentinel Aluminum Unclipped Mullion**", sheets 1 through 7 of 7, dated 04/02/10, prepared by Al–Farooq Corporation, signed, sealed and dated 07/29/10 by Javad Ahmad, P. E.
   (Submitted under previous NOA No.10–0510.14)

B. TESTS

1. Test reports on: 1) Air Infiltration Test, per FBC, TAS 202–94
   2) Uniform Static Air Pressure Test, Loading per FBC TAS 202–94
   3) Water Resistance Test, per FBC, TAS 202–94
   along with marked–up drawings and installation diagram of mullion, prepared by Hurricane test Laboratory, LLC, Test Report No. **HTL–0080–0303–11**, dated March 24, 2011, signed and sealed by Vinu J. Abraham, P. E.
2. Test reports on: 1) Air Infiltration Test, per FBC, TAS 202–94
   4) Uniform Static Air Pressure Test, Loading per FBC TAS 202–94
   5) Water Resistance Test, per FBC, TAS 202–94
   6) Large Missile Impact Test per FBC, TAS 201–94
   7) Cyclic Wind Pressure Loading per FBC, TAS 203–94
   along with marked–up drawings and installation diagram of mullion, prepared by Hurricane test Laboratory, LLC, Test Report No. **HTL–0080–0301–10**, dated March 30, 2010, signed and sealed by Vinu J. Abraham, P. E.
   (Submitted under previous NOA No.10–0510.14)

C. CALCULATIONS

1. Anchor verification calculations and structural analysis, complying with FBC–2007, prepared by Al–Farooq Corporation, dated 05/06/10, signed and sealed by Javad Ahmad, P. E.
   (Submitted under previous NOA No.10–0510.14)

D. QUALITY ASSURANCE

1. Miami–Dade Building and Neighborhood Compliance Department (BNC).

E. MATERIAL CERTIFICATIONS

1. None.

Jaime D. Gascon, P.E.
Product Control Section Supervisor
NOA No. 11–0330.22
Expiration Date: September 22, 2015
Approval Date: May 12, 2011

F. STATEMENTS

1. Statement letter of conformance, no financial interest and compliance with the FBC–2007, dated April 30, 2010, signed and sealed by Javad Ahmad, P. E.
   (Submitted under previous NOA No.10–0510.14)
2. Laboratory compliance letter for Test Report No. **HTL–0080–0303–11**, issued by Hurricane Test Laboratory, LLC, dated March 24, 2011, signed and sealed by Vinu J. Abraham, P. E.
3. Laboratory compliance letter for Test Report No. **HTL–0080–0301–10**, issued by Hurricane Test Laboratory, LLC, dated March 30, 2010, signed and sealed by Vinu J. Abraham, P. E.
   (Submitted under previous NOA No.10–0510.14)
4. Proposal No. **09–1492** issued by BCCO, dated November 05, 2009, signed by Manuel Perez, P. E.
   (Submitted under previous NOA No.10–0510.14)

G. OTHERS

1. Notice of Acceptance No. **10–0510.14**, issued to CGI Windows and Doors, Inc. for their Series "**Sentinel Aluminum Unclipped Mullion – L.M.I.**", approved on 09/22/10 and expiring on 09/22/15.

Jaime D. Gascon, P. E.
Product Control Section Supervisor
NOA No. 11–0330.22
Expiration Date: September 22, 2015
Approval Date: May 12, 2011

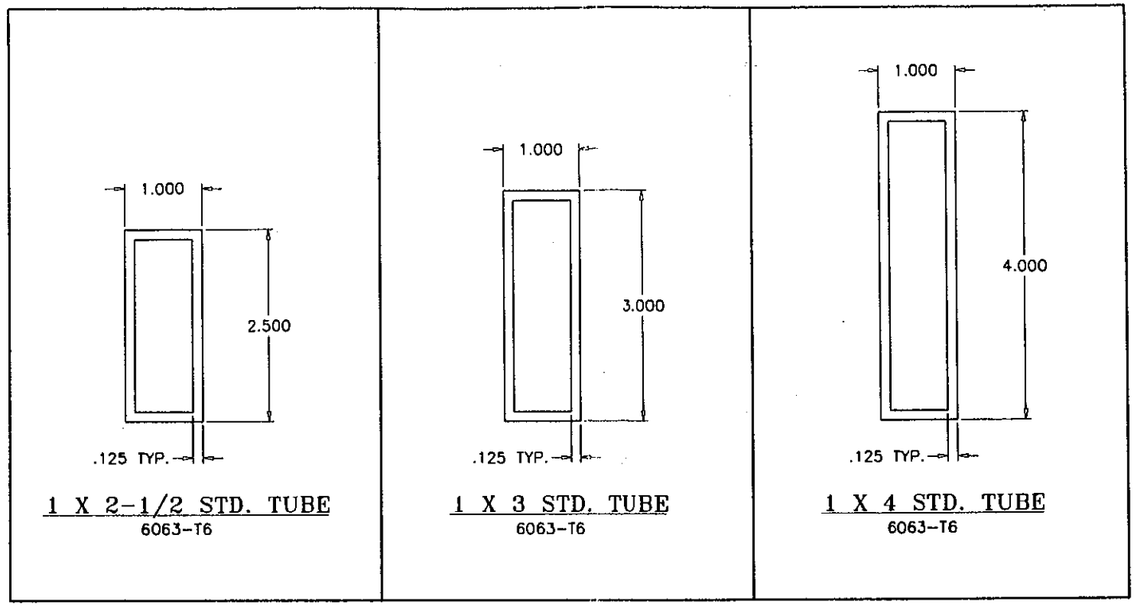

1 X 2-1/2 STD. TUBE
6063-T6

1 X 3 STD. TUBE
6063-T6

1 X 4 STD. TUBE
6063-T6

SERIES SENTINEL UNCLIPPED ALUMINUM MULLIONS
WINDOW FRAME MEMBER INCLUDED IN PROPERTIES

THESE MULLIONS TO BE USED WITH
SERIES 130 SENTINEL FIXED WINDOW
SERIES 110 SENTINEL SINGLE HUNG WINDOW
SERIES 120 SENTINEL HORIZ. SLIDING WINDOW
FOR WINDOWS IMPACT AND LOAD RATINGS SEE CORRESPONDING NOA'S.
LOWER DESIGN PRESSURE FROM WINDOW APPROVALS OR MULLION CHARTS WILL APPLY TO ENTIRE SYSTEM.

NOTES:

THIS PRODUCT HAS BEEN DESIGNED AND TESTED TO COMPLY WITH THE REQUIREMENTS OF THE FLORIDA BUILDING CODE 2007 EDITION INCLUDING HIGH VELOCITY HURRICANE ZONE (HVHZ).

ALL GLAZING PRODUCTS USED WITH THESE MULLIONS MUST MEET THE APPLICABLE BUILDING CODE REQUIREMENTS I.E: WIND LOAD, WATER INFILTRATION, FORCED ENTRY RESISTANCE, SAFEGUARDS ETC.

WOOD BUCKS BY OTHERS, MUST BE ANCHORED PROPERLY TO TRANSFER LOADS TO THE STRUCTURE.

ANCHORS SHALL BE AS LISTED, SPACED AS SHOWN ON DETAILS, EMBEDMENT TO BASE MATERIAL SHALL BE BEYOND WALL COVERING (STUCCO, TILE ETC.).

ANCHORING CONDITIONS OTHER THAN THOSE SHOWN IN THESE DETAILS ARE NOT PART OF THIS APPROVAL.

A LOAD DURATION INCREASE IN ALLOWABLE STRESS IS USED IN DESIGN OF ANCHORS INTO WOOD ONLY.

MATERIALS INCLUDING BUT NOT LIMITED TO STEEL/METAL SCREWS, THAT COME INTO CONTACT WITH OTHER DISSIMILAR MATERIALS SHALL MEET THE REQUIREMENTS OF 2007 FLORIDA BLDG. CODE SECTION 2003.8.4.

THESE MULLIONS ARE RATED FOR LARGE & SMALL MISSILE IMPACT

INSTRUCTIONS:

USE CHARTS AS FOLLOWS.

STEP 1 DETERMINE DESIGN LOAD REQUIRED PER ASCE 7 FOR PARTICULAR OPENING.

STEP 2 USE CONNECTION OF WINDOWS TO MULLION AS PER PRODUCT APPROVAL.

STEP 3 USING CHARTS ON SHEETS 3 THRU 5 SELECT MULLION TYPE AND ANCHOR QUANTITIES WITH DESIGN RATING MORE THAN THE DESIGN LOAD SPECIFIED IN STEP 1 ABOVE.

STEP 4 CAPACITY OF SELECTED CGI'S WINDOWS AND MULLION MUST EQUAL OR EXCEED REQUIRED LOADS.

Engr: JAVAD AHMAD
CIVIL
FL. PE # 70592
M.A.N. 3538
JUL 29 2010

PRODUCT REVISED
as complying with the Florida Building Code
Acceptance No 11-0330.22
Expiration Date 09/22/2015
By
Miami Dade Product Control

Approved as complying with the Florida Building Code
Date 09/22/2010
NOA# 10-0510.14
Miami Dade Product Control Division
By

AL-FAROOQ CORPORATION
ENGINEERS & PRODUCT DEVELOPMENT
1235 S.W. 87 AVE
MIAMI, FLORIDA 33174
TEL. (305) 264-8100 FAX. (305) 262-6978

MULLION\M10-01CGI

SERIES SENTINEL UNCLIPPED ALUM MULLIONS

CGI WINDOWS & DOORS
10100 N.W. 25TH STREET
MIAMI, FL. 33172
TEL. (305) 593-6590 FAX. (305) 593-6592

revisions:

no	date	by	description

date: 04-02-10
scale: 1/2" = 1"
dr. by:
chk. by:

drawing no.
M10-01

FLANGE, FLANGE ADAPTOR AND FLUSH FRAMES CAN BE USED AT ALL MULLION COMBINATIONS.

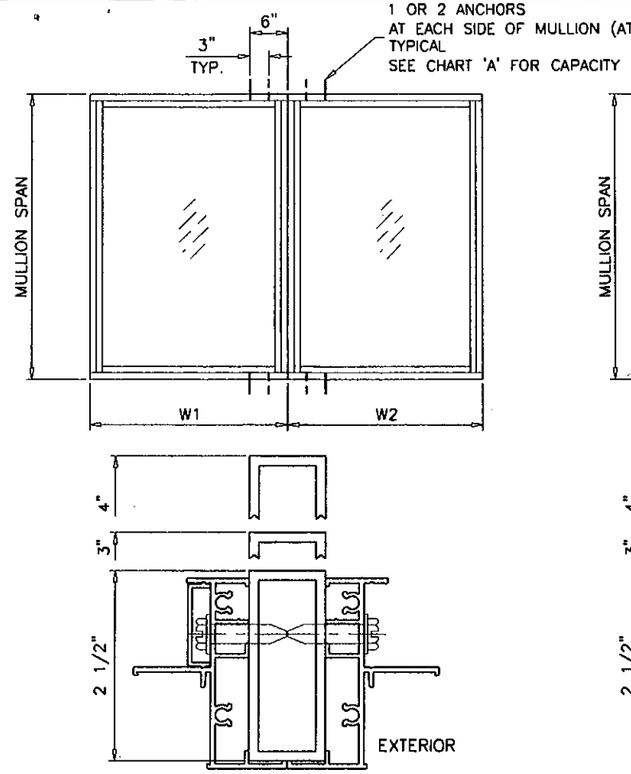

FIXED TO FIXED

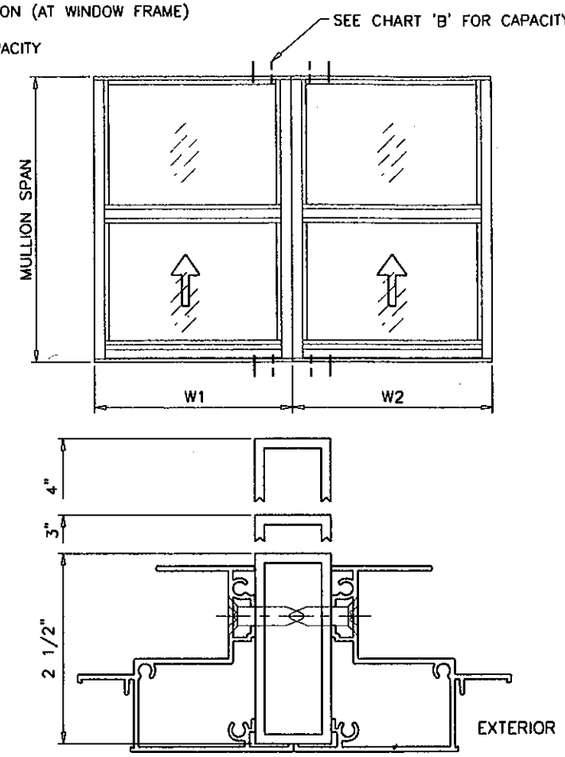

S.H. TO S.H.

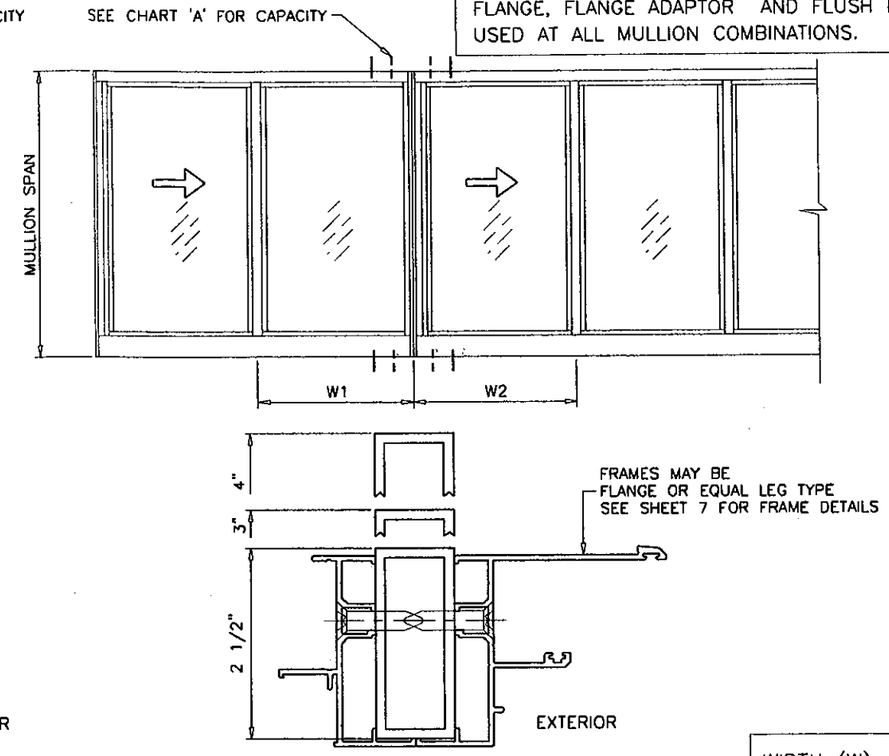

H.R. TO H.R.

$$\text{WIDTH (W)} = \frac{W1 + W2}{2}$$

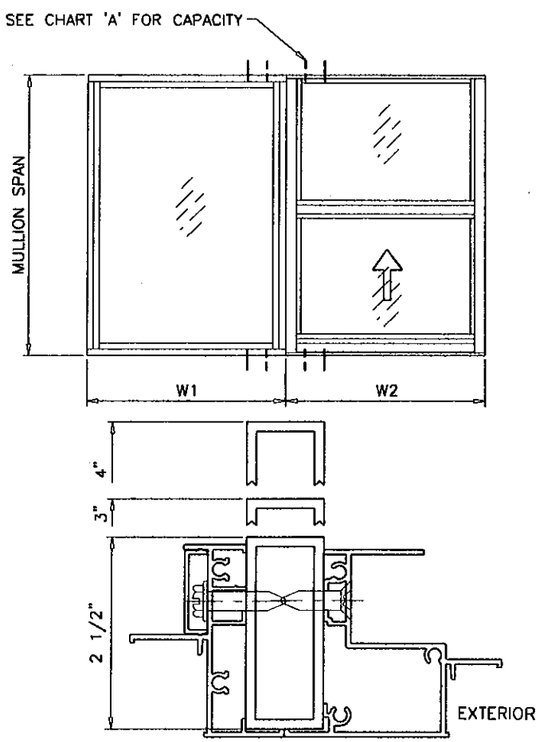

FIXED TO S.H.

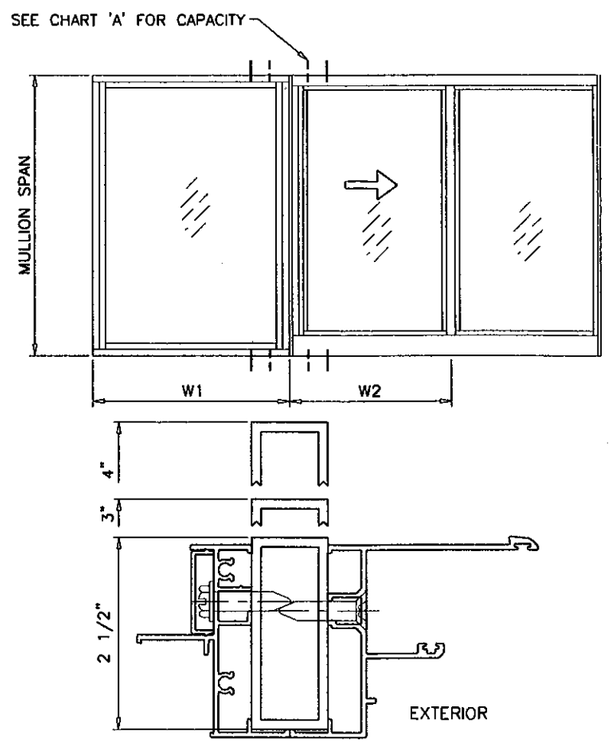

FIXED TO H.R.

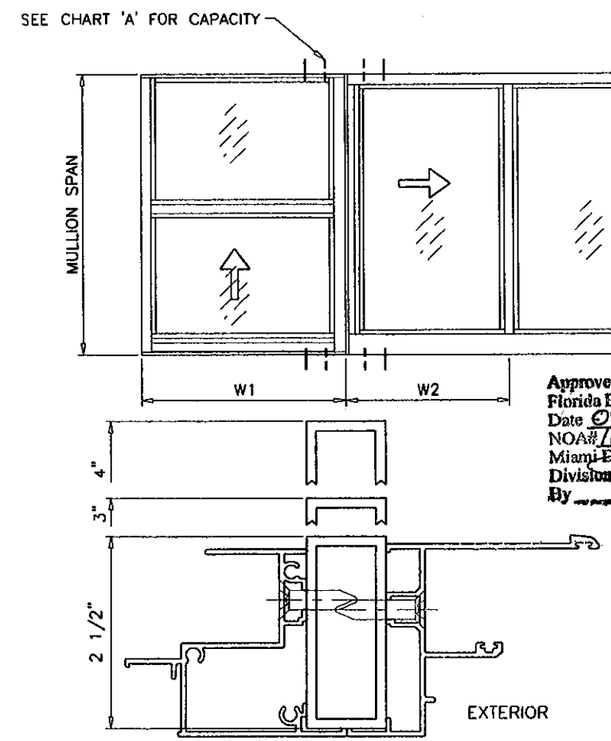

S.H. TO H.R.

PRODUCT REVISED
as complying with the Florida Building Code
Acceptance No 11-0330.22
Expiration Date 09/22/2016
By
Miami Dade Product Control

Approved as complying with the Florida Building Code
Date 09/22/2010
NOA# 10-0510.14
Miami Dade Product Control Division
By

Engr: JAVAD AHMAD
CIVIL
FLA. PE # 70592
C.A.N. 2898

AL-FAROOQ CORPORATION
ENGINEERS & PRODUCT DEVELOPMENT
1235 S.W. 87 AVE
MIAMI, FLORIDA 33174
TEL (305) 264-8100 FAX. (305) 262-6978

MULLION\M10-01CGI

SERIES SENTINEL UNCLIPPED ALUM MULLIONS

CGI WINDOWS & DOORS
10100 N.W. 25TH STREET
MIAMI, FL. 33172
TEL. (305) 593-6590 FAX. (305) 593-6592

revisions:			
no	date	by	description

date: 04-02-10
scale: 1/2" = 1"
dr. by:
chk. by:

drawing no.
M10-01

CHART 'A' DESIGN LOAD CAPACITY – PSF

MULLION WITH ANY COMBINATION OF SERIES SENTINEL
FIXED, HORIZONTAL SLIDING OR SINGLE HUNG WINDOWS

WINDOW DIMS.		1 ANCHOR AT EACH SIDE OF MULLION			2 ANCHORS AT EACH SIDE OF MULLION		
WIDTH (W)	MULL SPAN	MULL TUBE 1 X 2-1/2	MULL TUBE 1 X 3	MULL TUBE 1 X 4	MULL TUBE 1 X 2-1/2	MULL TUBE 1 X 3	MULL TUBE 1 X 4
19-1/8"	50-5/8"	90.0	90.0	90.0	90.0	90.0	90.0
26-1/2"		90.0	90.0	90.0	90.0	90.0	90.0
37"		90.0	90.0	90.0	90.0	90.0	90.0
49"		85.0	85.0	85.0	90.0	90.0	90.0
53-1/8"		85.0	85.0	85.0	90.0	90.0	90.0
19-1/8"	63"	90.0	90.0	90.0	90.0	90.0	90.0
26-1/2"		82.6	82.6	82.6	90.0	90.0	90.0
37"		66.1	66.1	66.1	82.5	90.0	90.0
49"		57.7	57.7	57.7	70.0	90.0	90.0
53-1/8"		56.2	56.2	56.2	67.8	90.0	90.0
19-1/8"	76"	80.7	85.7	85.7	80.7	90.0	90.0
26-1/2"		59.6	65.5	65.5	59.6	79.5	90.0
37"		44.8	51.2	51.2	44.8	59.8	90.0
49"		36.6	43.1	43.1	36.6	48.8	85.8
53-1/8"		34.9	41.5	41.5	34.9	46.5	81.7
19-1/8"	85"	57.4	75.5	75.5	57.4	76.5	90.0
26-1/2"		42.2	56.3	57.3	42.2	56.3	90.0
37"		31.4	41.9	44.2	31.4	41.9	73.6
49"		25.2	33.6	36.7	25.2	33.6	59.1
53-1/8"		23.9	31.8	35.1	23.9	31.8	55.9
19-1/8"	90"	48.2	64.3	70.8	48.2	64.3	90.0
26-1/2"		35.4	47.2	53.5	35.4	47.2	82.9
37"		26.2	35.0	41.2	26.2	35.0	61.4
49"		20.9	27.9	33.9	20.9	27.9	49.0
19-1/8"	96"	39.6	52.9	65.9	39.6	52.9	90.0
26-1/2"		29.0	38.7	49.6	29.0	38.7	68.0
37"		21.4	28.6	38.0	21.4	28.6	50.2

NOTE:
MULLIONS RATED IN THESE CHARTS WITH ANY COMBINATION OF FIXED, SINGLE HUNG OR HORIZ. SLIDING WINDOWS MAY BE ORIENTED VERTICALLY OR HORIZONTALLY.
(INTERPOLATION BETWEEN WIDTHS ALLOWED)

CHART 'A' DESIGN LOAD CAPACITY – PSF

MULLION WITH ANY COMBINATION OF SERIES SENTINEL
FIXED, HORIZONTAL SLIDING OR SINGLE HUNG WINDOWS

WINDOW DIMS.		1 ANCHOR AT EACH SIDE OF MULLION			2 ANCHORS AT EACH SIDE OF MULLION		
WIDTH (W)	MULL SPAN	MULL TUBE 1 X 2-1/2	MULL TUBE 1 X 3	MULL TUBE 1 X 4	MULL TUBE 1 X 2-1/2	MULL TUBE 1 X 3	MULL TUBE 1 X 4
24"	48"	90.0	90.0	90.0	90.0	90.0	90.0
30"		90.0	90.0	90.0	90.0	90.0	90.0
36"		90.0	90.0	90.0	90.0	90.0	90.0
42"		90.0	90.0	90.0	90.0	90.0	90.0
48"		90.0	90.0	90.0	90.0	90.0	90.0
54"		90.0	90.0	90.0	90.0	90.0	90.0
60"		90.0	90.0	90.0	90.0	90.0	90.0
24"	60"	90.0	90.0	90.0	90.0	90.0	90.0
30"		80.6	80.6	80.6	90.0	90.0	90.0
36"		72.0	72.0	72.0	90.0	90.0	90.0
42"		66.5	66.5	66.5	89.7	90.0	90.0
48"		63.0	63.0	63.0	84.1	90.0	90.0
54"		61.1	61.1	61.1	80.9	90.0	90.0
60"		60.5	60.5	60.5	79.8	90.0	90.0
24"	72"	75.6	75.6	75.6	77.1	90.0	90.0
30"		63.3	63.7	63.7	63.3	84.4	90.0
36"		54.5	56.0	56.0	54.5	72.7	90.0
42"		48.6	50.8	50.8	48.6	64.8	90.0
48"		44.5	47.3	47.3	44.5	59.4	90.0
54"		41.7	44.8	44.8	41.7	55.7	90.0
60"		39.9	43.2	43.2	39.9	53.3	90.0
24"	84"	47.9	63.0	63.0	47.9	64.0	90.0
30"		39.1	52.1	52.6	39.1	52.1	90.0
36"		33.3	44.5	45.8	33.3	44.5	78.1
42"		29.4	39.2	41.1	29.4	39.2	68.9
48"		26.6	35.5	37.8	26.6	35.5	62.3
54"		24.6	32.8	35.4	24.6	32.8	57.6
24"	96"	31.9	42.5	54.0	31.9	42.5	74.7
30"		25.9	34.5	44.8	25.9	34.5	60.6
36"		21.9	29.3	38.8	21.9	29.3	51.4
42"		–	25.6	34.6	–	25.6	45.0
48"		–	23.0	31.5	–	23.0	40.4

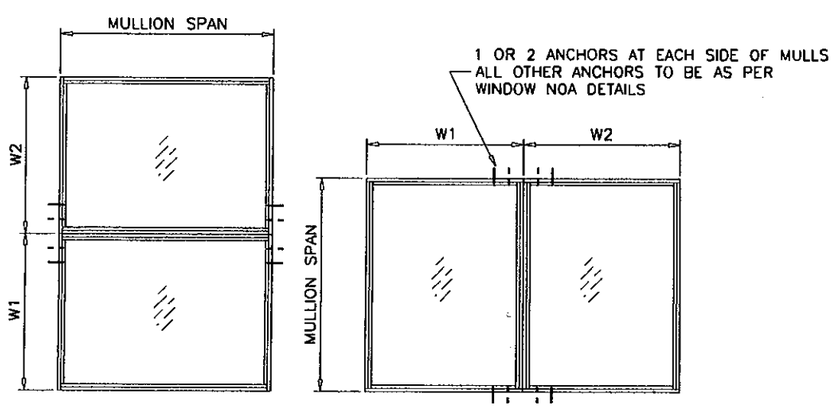

$$\text{WIDTH (W)} = \frac{W1 + W2}{2}$$

FLANGE OR FLUSH FRAMES

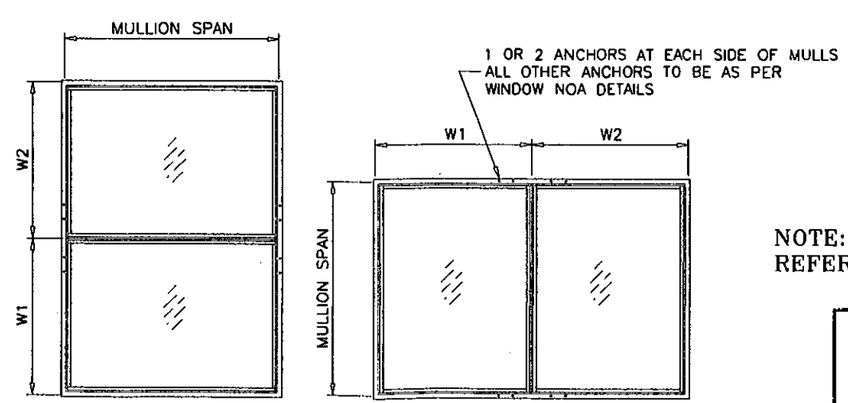

$$\text{WIDTH (W)} = \frac{W1 + W2}{2}$$

FIN FRAMES

PRODUCT REVISED
as complying with the Florida
Building Code
Acceptance No 11-0330.22
Expiration Date 09/22/2015
By
Miami Dade Product Control

NOTE:
REFER TO PAGE 2 FOR OTHER COMBINATIONS.

Engr: JAVAD AHMAD
CIVIL
FLA. PE # 70592
C.A.N. 3538
JUL 29 2010

Approved as complying with the
Florida Building Code
Date 09/22/2010
NOA#10-0510.14
Miami Dade Product Control
Division
By

AL-FAROOQ CORPORATION
ENGINEERS & PRODUCT DEVELOPMENT
1235 S.W. 87 AVE
MIAMI, FLORIDA 33174
TEL. (305) 264-8100 FAX. (305) 262-6978

MULLION\M10-01CGI

SERIES SENTINEL UNCLIPPED ALUM MULLIONS

CGI WINDOWS & DOORS
10100 N.W. 25TH STREET
MIAMI, FL. 33172
TEL. (305) 593-6590 FAX. (305) 593-6592

revisions:			
no	date	by	description

date: 04-02-10
scale: 1/2" = 1"
dr. by:
chk. by:

drawing no.
M10-01

CHART 'B' DESIGN LOAD CAPACITY - PSF

MULLION WITH COMBINATION OF SERIES SENTINEL
SINGLE HUNG WINDOWS OR FIXED TRANSOM

WINDOW DIMS.		1 ANCHOR AT EACH SIDE OF MULLION			2 ANCHORS AT EACH SIDE OF MULLION		
WIDTH (W)	MULL SPAN	MULL TUBE 1 X 2-1/2	MULL TUBE 1 X 3	MULL TUBE 1 X 4	MULL TUBE 1 X 2-1/2	MULL TUBE 1 X 3	MULL TUBE 1 X 4
19-1/8"	50-5/8"	90.0	90.0	90.0	90.0	90.0	90.0
26-1/2"		90.0	90.0	90.0	90.0	90.0	90.0
37"		90.0	90.0	90.0	90.0	90.0	90.0
49"		85.0	85.0	85.0	90.0	90.0	90.0
53-1/8"		85.0	85.0	85.0	90.0	90.0	90.0
19-1/8"	63"	90.0	90.0	90.0	90.0	90.0	90.0
26-1/2"		82.6	82.6	82.6	90.0	90.0	90.0
37"		66.1	66.1	66.1	90.0	90.0	90.0
49"		57.7	57.7	57.7	90.0	90.0	90.0
53-1/8"		56.2	56.2	56.2	88.5	90.0	90.0
19-1/8"	76"	85.7	85.7	85.7	90.0	90.0	90.0
26-1/2"		65.5	65.5	65.5	77.7	90.0	90.0
37"		51.2	51.2	51.2	58.5	73.4	90.0
49"		43.1	43.1	43.1	47.7	60.0	86.3
53-1/8"		41.5	41.5	41.5	45.5	57.2	82.9
19-1/8"	85"	74.8	75.5	75.5	74.8	90.0	90.0
26-1/2"		55.0	57.3	57.3	55.0	69.1	90.0
37"		40.9	44.2	44.2	40.9	51.4	83.1
49"		32.9	36.7	36.7	32.9	41.3	66.8
53-1/8"		31.1	35.1	35.1	31.1	39.1	63.2
19-1/8"	90"	62.9	70.8	70.8	62.9	79.0	90.0
26-1/2"		46.2	53.5	53.5	46.2	58.0	90.0
37"		34.2	41.2	41.2	34.2	43.0	69.4
49"		27.3	33.9	33.9	27.3	34.3	55.4
19-1/8"	96"	51.7	65.0	65.9	51.7	65.0	90.0
26-1/2"		37.9	47.6	49.6	37.9	47.6	76.9
37"		27.9	35.1	38.0	27.9	35.1	56.7

CHART 'B' DESIGN LOAD CAPACITY - PSF

MULLION WITH COMBINATION OF SERIES SENTINEL
SINGLE HUNG WINDOWS OR FIXED TRANSOM

WINDOW DIMS.		1 ANCHOR AT EACH SIDE OF MULLION			2 ANCHORS AT EACH SIDE OF MULLION		
WIDTH (W)	MULL SPAN	MULL TUBE 1 X 2-1/2	MULL TUBE 1 X 3	MULL TUBE 1 X 4	MULL TUBE 1 X 2-1/2	MULL TUBE 1 X 3	MULL TUBE 1 X 4
24"	48"	90.0	90.0	90.0	90.0	90.0	90.0
30"		90.0	90.0	90.0	90.0	90.0	90.0
36"		90.0	90.0	90.0	90.0	90.0	90.0
42"		90.0	90.0	90.0	90.0	90.0	90.0
48"		90.0	90.0	90.0	90.0	90.0	90.0
54"		90.0	90.0	90.0	90.0	90.0	90.0
60"		90.0	90.0	90.0	90.0	90.0	90.0
24"	60"	90.0	90.0	90.0	90.0	90.0	90.0
30"		80.6	80.6	80.6	90.0	90.0	90.0
36"		72.0	72.0	72.0	90.0	90.0	90.0
42"		66.5	66.5	66.5	90.0	90.0	90.0
48"		63.0	63.0	63.0	90.0	90.0	90.0
54"		61.1	61.1	61.1	90.0	90.0	90.0
60"		60.5	60.5	60.5	90.0	90.0	90.0
24"	72"	75.6	75.6	75.6	90.0	90.0	90.0
30"		63.7	63.7	63.7	82.5	90.0	90.0
36"		56.0	56.0	56.0	71.1	89.3	90.0
42"		50.8	50.8	50.8	63.4	79.6	90.0
48"		47.3	47.3	47.3	58.1	72.9	90.0
54"		44.8	44.8	44.8	54.4	68.4	89.6
60"		43.2	43.2	43.2	52.1	65.4	86.4
24"	84"	62.6	63.0	63.0	62.6	78.6	90.0
30"		51.0	52.6	52.6	51.0	64.1	90.0
36"		43.5	45.8	45.8	43.5	54.6	88.3
42"		38.4	41.1	41.1	38.4	48.2	77.9
48"		34.7	37.8	37.8	34.7	43.6	70.4
54"		32.1	35.4	35.4	32.1	40.3	65.1
24"	96"	41.6	52.2	54.0	41.6	52.2	84.4
30"		33.7	42.4	44.8	33.7	42.4	68.5
36"		28.6	36.0	38.8	28.6	36.0	58.1
42"		25.1	31.5	34.6	25.1	31.5	50.9
48"		22.5	28.2	31.5	22.5	28.2	45.6

NOTE:
MULLIONS RATED IN THESE CHARTS WITH SINGLE HUNG FRAMES
MAY BE ORIENTED VERTICALLY OR HORIZONTALLY AS SHOWN BELOW.
(INTERPOLATION BETWEEN WIDTHS ALLOWED)

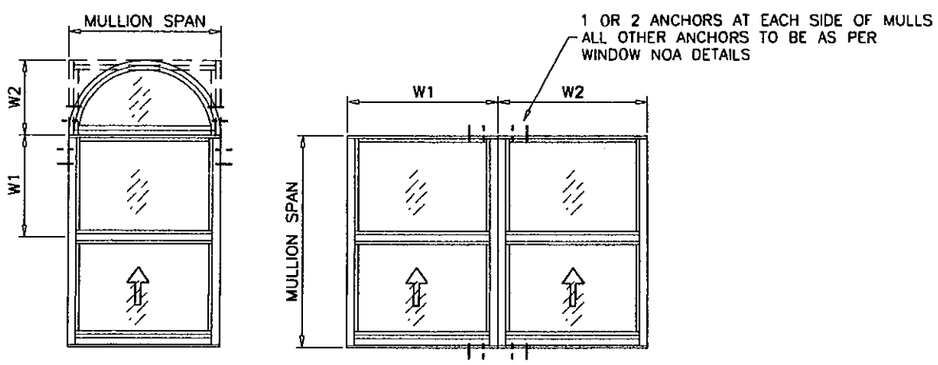

$$\text{WIDTH (W)} = \frac{W1 + W2}{2}$$

Engr: JAVAD AHMAD
CIVIL
FLA. PE # 70592
C.A.N. 3538

JUL 29 2010

PRODUCT REVISED
as complying with the Florida
Building Code
Acceptance No. 10330.22
Expiration Date 09/22/2015
By
Miami Dade Product Control

Approved as complying with the
Florida Building Code
Date 09/22/2010
NOA# 10-0510.14
Miami Dade Product Control
Division
By

AL-FAROOQ CORPORATION
ENGINEERS & PRODUCT DEVELOPMENT
1235 S.W. 87 AVE
MIAMI, FLORIDA 33174
TEL. (305) 264-8100 FAX. (305) 262-6978

MULLION\M10-01CGI

SERIES SENTINEL UNCLIPPED ALUM MULLIONS

CGI WINDOWS & DOORS
10100 N.W. 25TH STREET
MIAMI, FL. 33172
TEL. (305) 593-6590 FAX. (305) 593-6592

revisions:			
no	date	by	description

date: 04-02-10
scale: 1/2" = 1"
dr. by:
chk. by:

drawing no.
M10-01

CHART 'C' DESIGN LOAD CAPACITY - PSF

HORIZONTAL MULLION WITH COMBINATION OF SERIES SENTINEL
FIXED OVER HORIZ. SLIDING WINDOW

WINDOW DIMS.			1 ANCHOR AT EACH SIDE OF MULLION			2 ANCHORS AT EACH SIDE OF MULLION	
WINDOW WIDTH	WINDOW HEIGHT	TRANSOM HEIGHT	MULL TUBE 1 X 2-1/2	MULL TUBE 1 X 3	MULL TUBE 1 X 4	MULL TUBE 1 X 3	MULL TUBE 1 X 4
52-1/8"	25"	12"	90.0	90.0	90.0	90.0	90.0
		18"	90.0	90.0	90.0	90.0	90.0
		24"	90.0	90.0	90.0	90.0	90.0
		30"	90.0	90.0	90.0	90.0	90.0
		36"	90.0	90.0	90.0	90.0	90.0
		42"	90.0	90.0	90.0	90.0	90.0
		48"	90.0	90.0	90.0	90.0	90.0
73"		12"	90.0	90.0	90.0	90.0	90.0
		18"	90.0	90.0	90.0	90.0	90.0
		24"	90.0	90.0	90.0	90.0	90.0
		30"	82.1	82.1	82.1	90.0	90.0
		36"	75.3	75.3	75.3	90.0	90.0
		42"	70.3	70.3	70.3	90.0	90.0
		48"	66.7	66.7	66.7	86.9	90.0
52-1/8"	37-3/8"	12"	90.0	90.0	90.0	90.0	90.0
		18"	90.0	90.0	90.0	90.0	90.0
		24"	90.0	90.0	90.0	90.0	90.0
		30"	90.0	90.0	90.0	90.0	90.0
		36"	90.0	90.0	90.0	90.0	90.0
		42"	90.0	90.0	90.0	90.0	90.0
		48"	90.0	90.0	90.0	90.0	90.0
73"		12"	90.0	90.0	90.0	90.0	90.0
		18"	85.9	86.5	86.5	90.0	90.0
		24"	77.0	77.0	77.0	90.0	90.0
		30"	70.1	70.1	70.1	90.0	90.0
		36"	65.1	65.1	65.1	83.4	90.0
		42"	61.3	61.4	61.4	78.4	90.0
		48"	58.3	58.6	58.6	74.6	90.0
36"	49-5/8"	12"	90.0	90.0	90.0	90.0	90.0
		18"	90.0	90.0	90.0	90.0	90.0
		24"	90.0	90.0	90.0	90.0	90.0
		30"	90.0	90.0	90.0	90.0	90.0
		36"	90.0	90.0	90.0	90.0	90.0
		42"	90.0	90.0	90.0	90.0	90.0
		48"	90.0	90.0	90.0	90.0	90.0
52-1/8"		12"	90.0	90.0	90.0	90.0	90.0
		18"	90.0	90.0	90.0	90.0	90.0
		24"	90.0	90.0	90.0	90.0	90.0
		30"	90.0	90.0	90.0	90.0	90.0
		36"	76.3	86.3	86.3	90.0	90.0
		42"	83.7	83.7	83.7	90.0	90.0
		48"	82.4	82.4	82.4	90.0	90.0
73"		12"	79.1	83.3	83.3	90.0	90.0
		18"	71.2	73.5	73.5	90.0	90.0
		24"	65.0	66.5	66.5	83.2	90.0
		30"	60.2	61.3	61.3	77.0	90.0
		36"	56.4	57.4	57.4	72.1	90.0
		42"	53.4	54.5	54.5	68.3	90.0
		48"	51.2	52.3	52.3	65.4	90.0

CHART 'C' DESIGN LOAD CAPACITY - PSF

HORIZONTAL MULLION WITH COMBINATION OF SERIES SENTINEL
FIXED OVER HORIZ. SLIDING WINDOW

WINDOW DIMS.			1 ANCHOR AT EACH SIDE OF MULLION			2 ANCHORS AT EACH SIDE OF MULLION	
WINDOW WIDTH	WINDOW HEIGHT	TRANSOM HEIGHT	MULL TUBE 1 X 2-1/2	MULL TUBE 1 X 3	MULL TUBE 1 X 4	MULL TUBE 1 X 3	MULL TUBE 1 X 4
36"	62"	12"	90.0	90.0	90.0	90.0	90.0
		18"	90.0	90.0	90.0	90.0	90.0
		24"	90.0	90.0	90.0	90.0	90.0
		30"	90.0	90.0	90.0	90.0	90.0
		36"	90.0	90.0	90.0	90.0	90.0
		42"	90.0	90.0	90.0	90.0	90.0
		48"	90.0	90.0	90.0	90.0	90.0
52-1/8"		12"	90.0	90.0	90.0	90.0	90.0
		18"	90.0	90.0	90.0	90.0	90.0
		24"	84.4	84.4	84.4	90.0	90.0
		30"	79.8	79.8	79.8	90.0	90.0
		36"	76.5	76.5	76.5	90.0	90.0
		42"	74.5	74.5	74.5	90.0	90.0
		48"	73.4	73.4	73.4	90.0	90.0
73"		12"	66.3	71.0	71.0	84.8	90.0
		18"	60.7	63.8	63.8	77.6	90.0
		24"	56.2	58.4	58.4	71.8	90.0
		30"	52.5	54.4	54.4	67.2	90.0
		36"	49.6	51.3	51.3	63.4	90.0
		42"	47.3	49.0	49.0	60.5	89.3
		48"	45.5	47.2	47.2	58.2	86.1

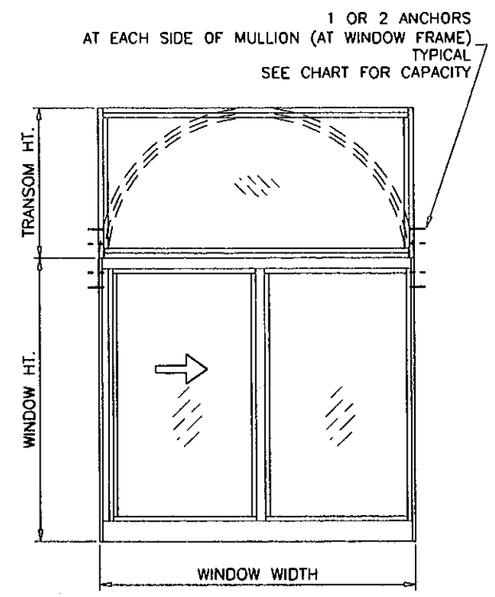

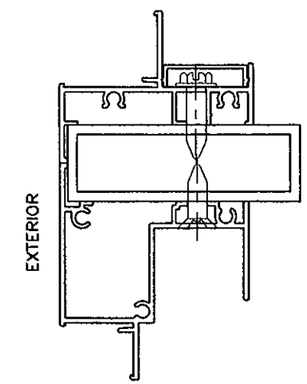

FIXED OVER H.R.

PRODUCT REVISED
as complying with the Florida
Building Code
Acceptance No 11-0330.22
Expiration Date 09/22/2015
By
Miami Dade Product Control

Engr: JAVAD AHMAD
CIVIL
FLA. PE # 70592
C.A.M. 3538
JUL 22, 2010

Approved as complying with the
Florida Building Code
Date 09/22/2010
NOA#10-0510.14
Miami Dade Product Control
Division
By

AL-FAROOQ CORPORATION
ENGINEERS & PRODUCT DEVELOPMENT
1235 S.W. 87 AVE
MIAMI, FLORIDA 33174
TEL. (305) 264-8100 FAX. (305) 262-6978

MULLION\M10-01CGI

SERIES SENTINEL UNCLIPPED ALUM MULLIONS

CGI WINDOWS & DOORS
10100 N.W. 25TH STREET
MIAMI, FL. 33172
TEL. (305) 593-6590 FAX. (305) 593-6592

revisions:			
no	date	by	description

date: 04-02-10
scale: 1/2" = 1"
dr. by:
chk. by:

drawing no.
M10-01

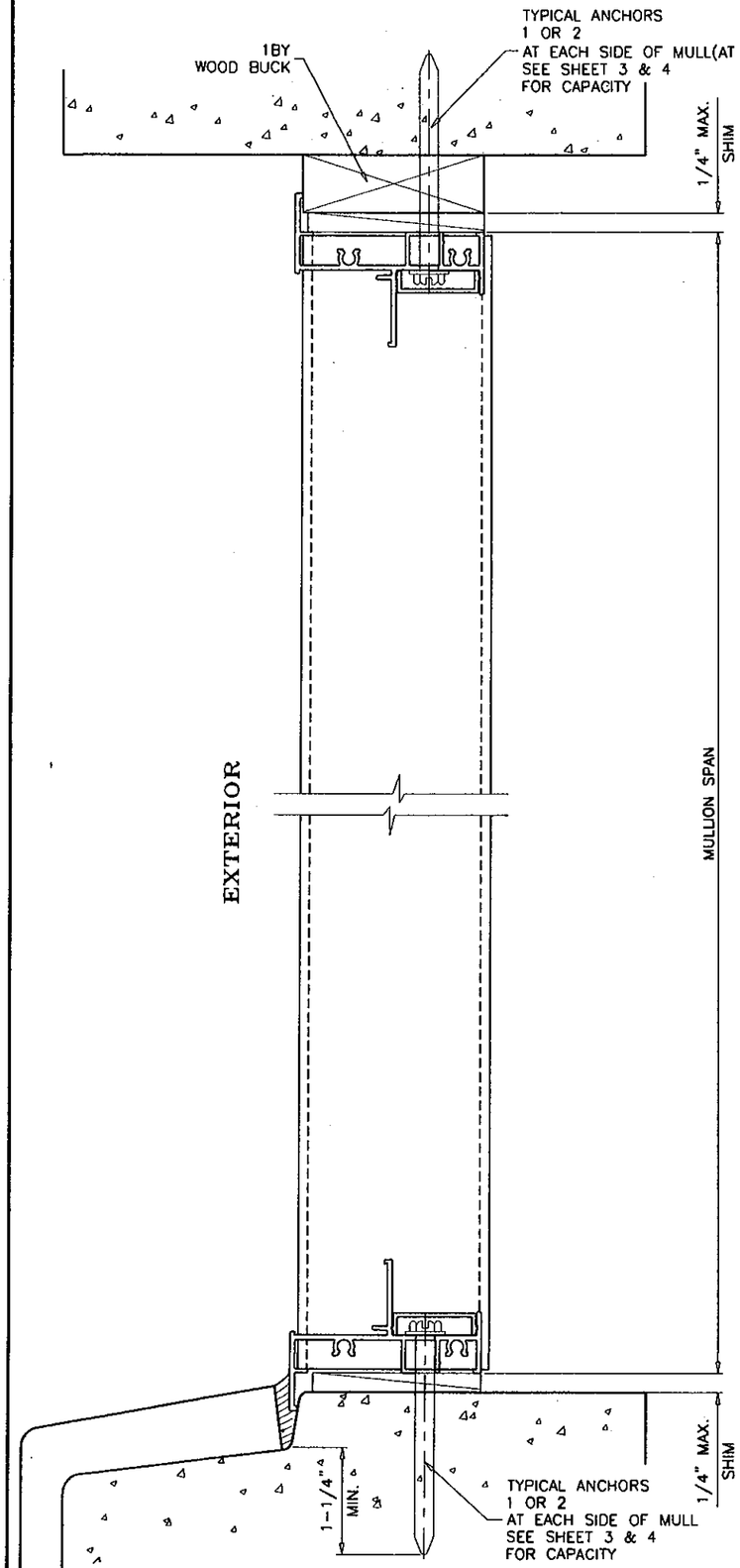

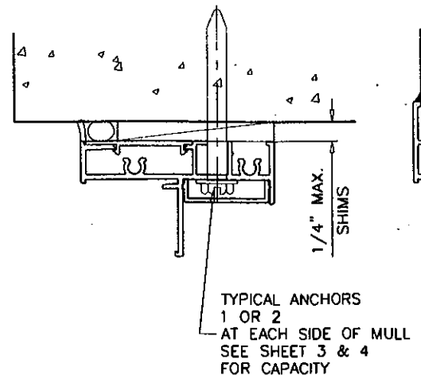

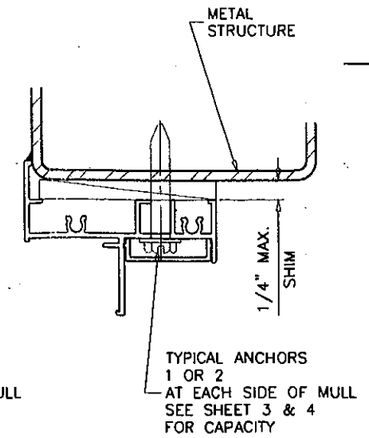

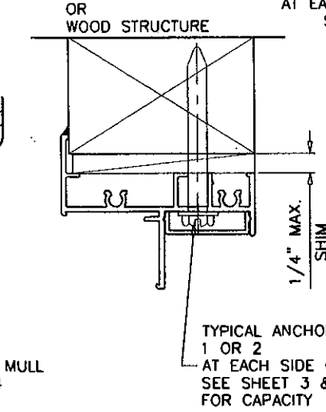

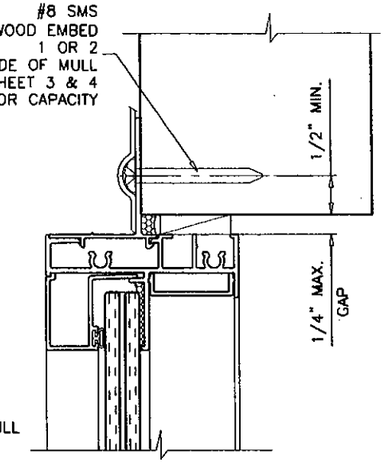

FLANGE, FLANGE ADAPTOR AND FLUSH FRAMES CAN BE USED AT ALL ANCHORAGE CONDITIONS.

WOOD BUCKS AND METAL STRUCTURE NOT BY CGI WDW. MUST SUSTAIN LOADS IMPOSED BY GLAZING SYSTEM AND TRANSFER THEM TO THE BUILDING STRUCTURE.

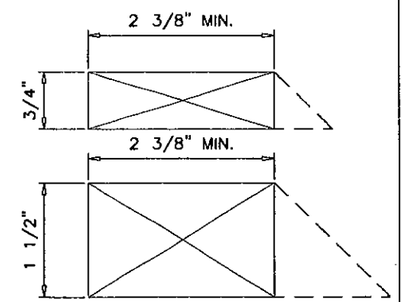

WHEN USED THE MIN. WOOD BUCK DEPTH SHALL BE 2⅜". THE USE OF DEEPER OR BEVELED WOODBUCKS IS PERMITTED.

TYPICAL ANCHORS: SEE ELEV. FOR SPACING

1/4" DIA. TAPCON BY 'ITW' (Fu=120 KSI, Fy=92 KSI)
1/4" DIA. ULTRACON BY 'ELCO' (Fu=177 KSI, Fy=155 KSI)

INTO 2BY WOOD BUCKS OR WOOD STRUCTURES
1-3/8" MIN. PENETRATION INTO WOOD

THRU 1BY BUCKS INTO CONC. OR MASONRY
1-1/4" MIN. EMBED INTO CONC. OR MASONRY

DIRECTLY INTO CONC. OR MASONRY
1-1/4" MIN. EMBED INTO CONC. OR MASONRY

#14 SMS OR SELF DRILLING SCREWS (GRADE 2 CRS)
INTO METAL STRUCTURES
STEEL : 12 GA. MIN. (Fy = 36 KSI MIN.)
ALUMINUM : 1/8" THK. MIN. (6063-T5 MIN.)
(STEEL IN CONTACT WITH ALUMINUM TO BE PLATED OR PAINTED)

TYPICAL EDGE DISTANCE
INTO CONCRETE AND MASONRY = 2" MIN.
INTO WOOD STRUCTURE = 1" MIN.
INTO METAL STRUCTURE = 3/4" MIN.

CONCRETE AT HEAD, SILL OR JAMBS f'c = 3000 PSI MIN.
C-90 HOLLOW/FILLED BLOCK AT JAMBS f'm = 2000 PSI MIN.

PRODUCT REVISED
as complying with the Florida Building Code
Acceptance No 11-0330.22
Expiration Date 09/22/2015
By
Miami Dade Product Control

FIXED WINDOW ANCHOR INSTALLATION DETAILS SHOWN. ALSO APPLICABLE TO SINGLE HUNG AND HORIZONTAL SLIDING WINDOW FRAMES IN FLANGE, EQUAL LEG OR FIN FRAME CONFIGURATIONS.

Engr: JAVAD AHMAD
CIVIL
FLA. PE # 70592
C.A.N. 3538
JUL 29 2010

Approved as complying with the Florida Building Code
Date 09/22/2010
NOA# 10-0510.14
Miami Dade Product Control Division
By

AL-FAROOQ CORPORATION
ENGINEERS & PRODUCT DEVELOPMENT
1235 S.W. 87 AVE
MIAMI, FLORIDA 33174
TEL. (305) 264-8100 FAX. (305) 262-6978

MULLION\M10-01CGI

SERIES SENTINEL UNCLIPPED ALUM MULLIONS

CGI WINDOWS & DOORS
10100 N.W. 25TH STREET
MIAMI, FL. 33172
TEL. (305) 593-6590 FAX. (305) 593-6592

revisions:			
no	date	by	description

date: 04-02-10
scale: 1/2" = 1"
dr. by:
chk. by:

drawing no. M10-01

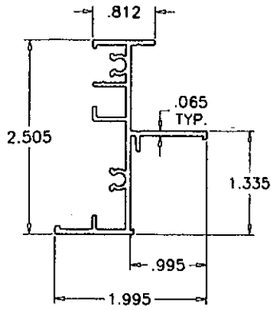

SERIES 130 SENTINEL
FIX. WDW. FLANGE FRAME
CGI-118

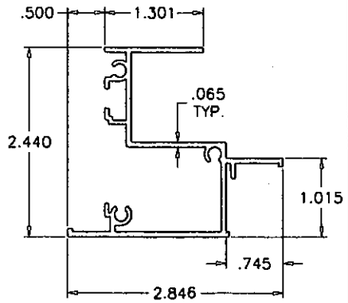

H.R. WDW. FLANGE FRAME HEAD
S.H. WDW. FLANGE FRAME JAMB
CGI-136

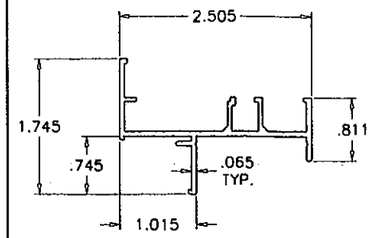

H.R. WDW. FLANGE FRAME JAMB
S.H. WDW. FLANGE FRAME HEAD
CGI-135

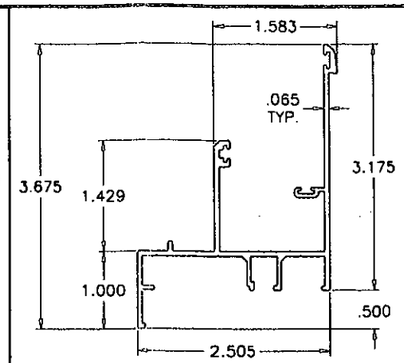

SERIES 110 SENTINEL
S.H. WDW. FLANGE FRAME SILL
CGI-137

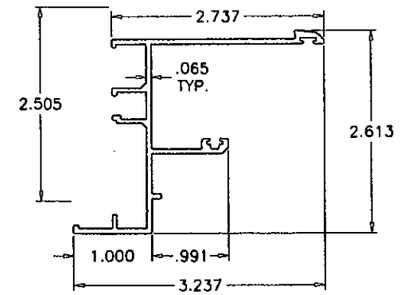

SERIES 120 SENTINEL
H.R. WDW. FLANGE FRAME JAMB
CGI-139

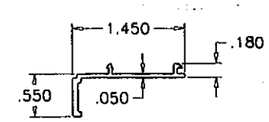

FLANGE ADAPTOR
CGI-109

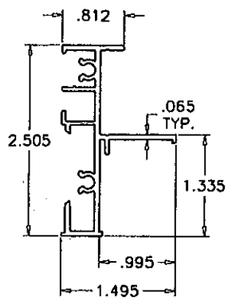

SERIES 130 SENTINEL
FIX. WDW. FLUSH FRAME
CGI-119

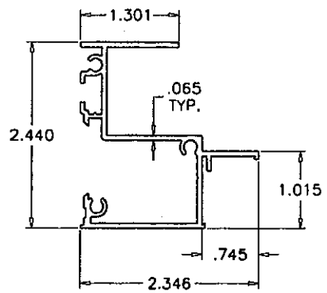

H.R. WDW. FLUSH FRAME HEAD
S.H. WDW. FLUSH FRAME JAMB
CGI-102

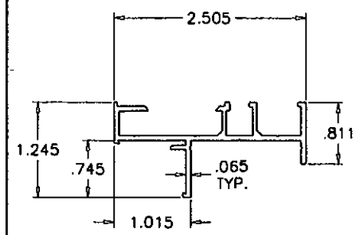

H.R. WDW. FLUSH FRAME JAMB
S.H. WDW. FLUSH FRAME HEAD
CGI-100

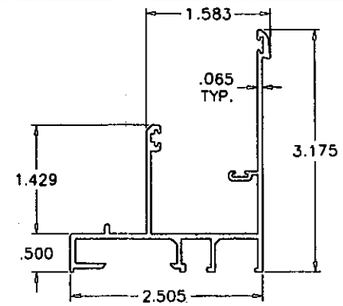

SERIES 110 SENTINEL
S.H. WDW. FLUSH FRAME SILL
CGI-101

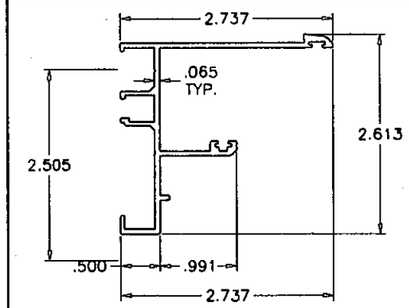

SERIES 120 SENTINEL
H.R. WDW. FLUSH FRAME JAMB
CGI-116

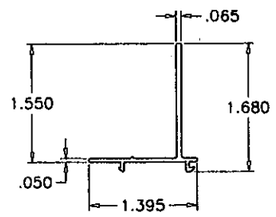

FIN ADAPTOR
CGI-110

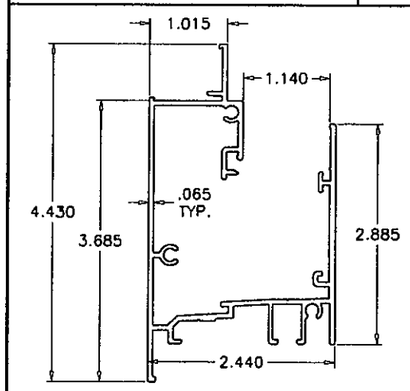

SERIES 120 SENTINEL
H.R. WDW. FLANGE FRAME SILL
CGI-138

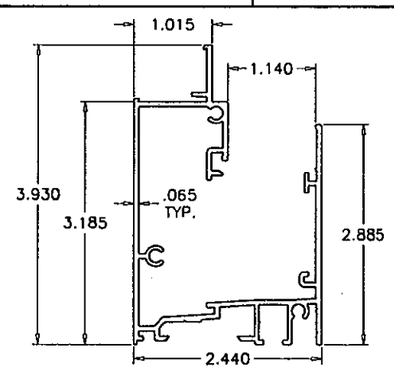

SERIES 120 SENTINEL
H.R. WDW. FLUSH FRAME SILL
CGI-113

PRODUCT REVISED
as complying with the Florida Building Code
Acceptance No 11-0330.22
Expiration Date 09/22/2015
By
Miami Dade Product Control

Engr: JAVAD AHMAD
CIVIL
FLA. PE # 70592
C.A.N. 3538
JULY 2, 2010

Approved as complying with the Florida Building Code
Date 09/22/2010
NOA# 10-0510.14
Miami Dade Product Control Division
By

AL-FAROOQ CORPORATION
ENGINEERS & PRODUCT DEVELOPMENT
1235 S.W. 87 AVE
MIAMI, FLORIDA 33174
TEL. (305) 264-8100 FAX. (305) 262-6978

MULLION\M10-01CGI

SERIES SENTINEL UNCLIPPED ALUM MULLIONS

CGI WINDOWS & DOORS
10100 N.W. 25TH STREET
MIAMI, FL. 33172
TEL. (305) 593-6590 FAX. (305) 593-6592

revisions:

no	date	by	description

date: 04-02-10
scale: 1/2" = 1"
dr. by:
chk. by:

drawing no.
M10-01