MIAMI-DADE COUNTY
DEPARTMENT OF PERMITTING, ENVIRONMENT, AND REGULATORY AFFAIRS (PERA)
BOARD AND CODE ADMINISTRATION DIVISION

MIAMI–DADE COUNTY
PRODUCT CONTROL SECTION
11805 SW 26 Street, Room 208
Miami, Florida 33175–2474
T (786) 315–2590 F (786) 315–2599
www.miamidade.gov/pera/

NOTICE OF ACCEPTANCE (NOA)

Trainor Glass Company
1101 W. 13th Street West
Riviera Beach, FL 33404

SCOPE:

This NOA is being issued under the applicable rules and regulations governing the use of construction materials. The documentation submitted has been reviewed and accepted by Miami–Dade County PERA–Product Control Section to be used in Miami–Dade County and other areas where allowed by the Authority Having Jurisdiction (AHJ).

This NOA shall not be valid after the expiration date stated below. The Miami–Dade County Product Control Section (In Miami–Dade County) and/or the AHJ (in areas other than Miami–Dade County) reserve the right to have this product or material tested for quality assurance purposes. If this product or material fails to perform in the accepted manner, the manufacturer will incur the expense of such testing and the AHJ may immediately revoke, modify, or suspend the use of such product or material within their jurisdiction. PERA reserves the right to revoke this acceptance, if it is determined by Miami–Dade County Product Control Section that this product or material fails to meet the requirements of the applicable building code.

This product is approved as described herein, and has been designed to comply with the Florida Building Code, including the High Velocity Hurricane Zone.

DESCRIPTION: Series "T850 ICW 90 PSF" Aluminum Curtain Wall System – S.M.I.

APPROVAL DOCUMENT: Drawing No. **4326435**, titled "Series T850 ICW System Single & Multiple Span 90 PSF Small Missile Impact", sheets 1 through 44 of 44, dated 03/03/2011 with revision "**2**" dated 10/04/2011, prepared by Design Engineering & Consulting, Inc., signed and sealed by Jeffery H. Marsh, P. E., bearing the Miami–Dade County Product Control Approval stamp with the Notice of Acceptance number and Approval date by the Miami–Dade County Product Control Section.

MISSILE IMPACT RATING: Small Missile Impact Resistant.

LABELING: Each unit shall bear a permanent label with the manufacturer's name or logo, city, state, model/series and following statement: "Miami–Dade County Product Control Approved" unless otherwise noted herein.

RENEWAL of this NOA shall be considered after a renewal application has been filed and there has been no change in the applicable building code negatively affecting the performance of this product.

TERMINATION of this NOA will occur after the expiration date or if there has been a revision or change in the materials, use, and/or manufacture of the product or process. Misuse of this NOA as an endorsement of any product, for sales, advertising or any other purposes shall automatically terminate this NOA. Failure to comply with any section of this NOA shall be cause for termination and removal of NOA.

ADVERTISEMENT: The NOA number preceded by the words Miami–Dade County, Florida, and followed by the expiration date may be displayed in advertising literature. If any portion of the NOA is displayed, then it shall be done in its entirety.

INSPECTION: A copy of this entire NOA shall be provided to the user by the manufacturer or its distributors and shall be available for inspection at the job site at the request of the Building Official.

This NOA consists of this page 1 and evidence page E–1, as well as approval document mentioned above.

The submitted documentation was reviewed by **Jaime D. Gascon, P. E.**

MIAMI-DADE COUNTY APPROVED

J. Gascon
10/13/11

NOTICE OF ACCEPTANCE: EVIDENCE SUBMITTED

A. DRAWINGS

1. Manufacturer's die drawings and sections.
2. Drawing No. **4326435**, titled "Series T850 ICW System Single & Multiple Span 90 PSF Small Missile Impact", sheets 1 through 44 of 44, dated 03/03/2011 with revision "**2**" dated 10/04/2011, prepared by Design Engineering & Consulting, Inc., signed and sealed by Jeffery H. Marsh, P. E.

B. TESTS

1. Test reports on: 1) Air Infiltration Test, per FBC, TAS 202–94
   2) Uniform Static Air Pressure Test, Loading per FBC TAS 202–94
   3) Water Resistance Test, per FBC, TAS 202–94
   4) Dynamic Water Infiltration Test, per FBC and per AAMA 501.1–05
   5) Interstory Displacement Test, per FBC and per AAMA 501.4–00
   6) Small Missile Impact Test, per FBC, TAS 201–94, Level A per ASTM E 1996–08
   7) Thermal Cycling Test, per FBC and per AAMA 501.5–07
   8) Cyclic Wind Pressure Loading per FBC, TAS 203–94

   along with marked–up drawings and installation diagram of curtain wall system, prepared by Hurricane Test Laboratory, LLC, Test Reports No. **HTL 0062–0906–10**, dated 03/24/2011, all signed and sealed by Vinu J. Abraham, P. E.

C. CALCULATIONS

1. Anchor calculations and structural analysis, complying with FBC–2007, prepared by Design Engineering & Consulting, Inc., dated 11/18/2010, signed, sealed and dated 10/04/2011 by Jeffery H. Marsh, P. E.
   Complies with ASTM E1300–04

D. QUALITY ASSURANCE

1. Miami–Dade Department of Permitting, Environment, and Regulatory Affairs (PERA).

E. MATERIAL CERTIFICATIONS

1. Notice of Acceptance No. **11–0624.02** issued to E.I. DuPont DeNemours & Co., Inc. for their "**DuPont Sentry Glass® Interlayer**" dated 05/26/2010, expiring on 01/14/12.

F. STATEMENTS

1. Statement letter of compliance with the FBC–2007 and FBC–2010, dated 10/04/2011, signed and sealed by Jeffery H. Marsh, P. E.
2. Statement letter of no financial interest, conformance and compliance with the FBC–2007, dated 11/18/2010, signed and sealed by Jeffery H. Marsh, P. E.
3. Laboratory compliance letters for Test Report No. **HTL 0062–0906–10**, issued by Hurricane Test Laboratory, LLC, dated 03/24/2011, all signed and sealed by Vinu J. Abraham, P. E.

G. OTHERS

1. None.

Jaime D. Gascon, P. E.
Product Control Section Supervisor
NOA No. 11–0401.03
Expiration Date: October 20, 2016
Approval Date: October 20, 2011

TRAINOR GLASS - T850 ICW SYSTEM
SINGLE & MULTIPLE SPAN
90 PSF SMALL MISSILE IMPACT

GLAZING GASKETS AND TAPES

PART NO.	PROFILE	DESCRIPTION	MANUFACTURER NO.	MATERIAL	DUROMETER	COLOR	FURNISHED BY
G-1		PRESET WIPER GASKET	TX-18034E	EPDM	70±5	BLACK	TRAINOR/ TREMCO
G-2		PRESET AIR SEAL BULB GASKET	TX-17992E	EPDM	70±5	BLACK	TRAINOR/ TREMCO
G-3		PRESET RAINSCREEN GASKET	TX-15075E	EPDM	70±5	BLACK	TRAINOR/ TREMCO
G-4		WEDGE GASKET	TR-6329E	EPDM	70±5	BLACK	TRAINOR/ TREMCO
G-5		PRESET GASKET	TR-5796W	SCR-900	70±5	BLACK	TRAINOR/ TREMCO
G-6		PRESET GLASS EDGE BULB GASKET	TX-17989E	EPDM	70±5	BLACK	TRAINOR/ TREMCO
G-7		PRESET AIR SEAL WIPER GASKET	TX-17979E	EPDM	70±5	BLACK	TRAINOR/ TREMCO
G-8		ACCORDIAN RAINSCREEN GASKET	TX-17980P/S	PEROX. EPDM SILICONE	60±5	BLACK	TRAINOR/ TREMCO
		0.062" X 6" EXTRUDED SILICONE SHEET	TR4949S	SILICONE	N/A 2	TRANS-LUCENT	TRAINOR/ TREMCO
FB-1		EXTRUDED CLOSED CELL FOAM BAFFLE 6" LONG	TR16132E	EPDM	N/A 2	BLACK	TRAINOR/ TREMCO
FB-2		EXTRUDED CLOSED CELL FOAM BAFFLE 6" LONG	TR16133E	EPDM	N/A 2	BLACK	TRAINOR/ TREMCO

SETTING BLOCKS

PART NO.	PROFILE	DESCRIPTION	MANUFACTURER NO.	MATERIAL	DUROMETER
SB-1		5/16" X 1 1/4" X 4"	TR-1731S	SILICONE	85±5
SB-2	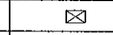	5/16" X 1/2" X 4"	TR-1058S	SILICONE	85±5
SB-3		1/4" X 1 3/8" X 4"	TR-1064S	SILICONE	85±5
SB-4	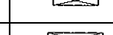	3/8" X 1 1/4" X 4"	TR-5043S	SILICONE	85±5
SB-5		3/8" X 11/16" X 4"	TX-18035S	SILICONE	85±5
SB-6	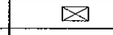	1/4" X 1/2" X 4"	TR-1294S	SILICONE	85±5

GLASS TYPES

TAG	DESCRIPTION
GL1	1 5/16" THK. INSULATED GLASS SMALL MISSILE I.G. LAMI CONSISTING OF: -1/4" CLEAR, TEMPERED -1/2" AIRSPACE -1/4" CLEAR ,HEAT STRENGTHENED -0.035 SENTRYGLAS - MDCA 1 -1/4" CLEAR ,HEAT STRENGTHENED
GL2	9/16" THK. LAMINATED GLASS SMALL MISSILE LAMI CONSISTING OF: -1/4" CLEAR ,HEAT STRENGTHENED -0.035 SENTRY GLASS - MDCA 1 -1/4" CLEAR ,HEAT STRENGTHENED

TAG	DESCRIPTION
GL3	1 5/16" COMPOSITE METAL PANEL SMALL MISSILE, CONSISTING OF: 4MM COMPOSITE ALUMINUM CLEAR ANODIZED 1" RIGID INSULATION .060 ALUM. SHEET CLEAR ANODIZED

INDEX

1/44	COVER SHEET
2/44	LISTS OF MATERIALS
3/44	ELEVATIONS - SINGLE SPAN
4/44	ELEVATIONS - SINGLE SPAN
5/44	ELEVATIONS - MULTIPLE SPAN
6/44	ELEVATIONS - MULTIPLE SPAN
7/44	GLAZING CHART
8/44	SINGLE SPAN MULLION CHART
9/44	MULTIPLE SPAN MULLION CHART
10/44	DETAILS - JAMB
11/44	DETAILS - INTERMEDIATE MULLION
12/44	DETAILS - INSIDE CORNER MULLION
13/44	DETAILS - OUTSIDE CORNER MULLION
14/44	DETAILS - DOOR JAMB
15/44	DETAILS - HEAD
16/44	DETAILS - INTERMEDIATE HORIZONTAL
17/44	DETAILS - SINGLE-SPAN SILL
18/44	DETAILS - CURTAINWALL SILL
19/44	DETAILS - DOOR HEADER
20/44	DETAILS - EXPANSION (STACK) HORIZONTAL
21/44	ANCHOR DETAILS - JAMB
22/44	ANCHOR DETAILS - INT MULLION
23/44	ANCHOR DETAILS - INSIDE CORNER MULLION
24/44	ANCHOR DETAILS - OUTSIDE CORNER MULLION
25/44	ANCHOR DETAILS - OUTSIDE CORNER MULLION
26/44	ANCHOR DETAILS - SINGLE SPAN HEAD
27/44	ANCHOR DETAILS - MULTIPLE SPAN HEAD
28/44	ANCHOR DETAILS - SINGLE SPAN SILL
29/44	ANCHOR DETAILS - MULTIPLE SPAN SILL
30/44	ANCHOR DETAILS - HEAD/SILL STRAP ANCHORS
31/44	ANCHOR LAYOUTS
32/44	ANCHOR LAYOUTS
33/44	ANCHOR LAYOUTS
34/44	ANCHOR LAYOUTS
35/44	ANCHOR LAYOUTS
36/44	EXTRUSIONS
37/44	EXTRUSIONS
38/44	EXTRUSIONS
39/44	EXTRUSIONS
40/44	EXTRUSIONS
41/44	EXTRUSIONS
42/44	EXTRUSIONS & STEEL SHAPES
43/44	STEEL & BRAKE SHAPES
44/44	REGLAZE DETAILS

GENERAL NOTES

DESIGN PARAMETERS

1 2007 AND 2010 FLORIDA BUILDING CODE WITH HVHZ REQUIREMENTS
TAS-201 - LARGE AND SMALL MISSILE IMPACT
TAS-202 - AIR LEAKAGE, WATER PENETRATION AND STRUCTURAL PERFORMANCE
TAS-203 - CYCLIC WIND PRESSURE LOADING

ASTM STANDARDS

E283 STATIC AIR LEAKAGE
E331 STATIC WATER PENETRATION
E501.1 DYNAMIC WATER PENETRATION
E330 UNIFORM STRUCTURAL DESIGN
E1886 LEVEL "D" IMPACT BY MISSILE & CYCLIC PRESSURES
AAMA - TIR - A9 - 91

SYSTEM DIMENSIONS

3 1/2" x 7 3/4" WITH 1 5/16" GLAZING
3 1/2" x 7" WITH 9/16"

FINISH

ON A PER JOB BASIS (EXPOSED AREAS)
CLEAR ANODIZED (NON EXPOSED AREAS)
MILL (NON-EXPOSED AREAS SUCH AS SETTING CHAIRS, ANCHOR CLIPS, ETC)
ALUMINUM IN CONTACT WITH DISSIMILAR MATERIALS SHALL BE PROTECTED AS SPECIFIED IN SECTION 2003.8.4 OF THE FLORIDA BUILDING CODE (FBC)

ALUMINUM ALLOYS

6063-T5, 6063-T6 AND 6005-T5 (SEE ALSO EXTRUSIONS ON SHEETS 36-43)

STEEL

ALL REINFORCING STEEL SHALL BE PER ASTM-A36 (PRIME PAINTED)

GLASS

SEE "GLASS TYPES" SECTION ON THIS COVER SHEET
SEE GLAZING CHART ON SHEET 7

GASKETS

SEE "GLAZING GASKETS AND TAPES" SECTION ON THIS COVER SHEET

SEALANTS

SEE "SEALANT TYPES" SECTION ON THIS COVER SHEET
SEE "PERIMETER SEALANT OPTIONS" ON SHEETS 10, 15, 17 & 18

ANCHORAGE

FASTENERS AND ANCHOR BOLTS TO BE CORROSION RESISTANT AS DETAILED HEREIN AND CONFORM TO THE FLORIDA BUILDING CODE (FBC)

SEALANT TYPES

TAG	DESCRIPTION
S-1	DOW-CORNING 983 (2 PART SILICONE) COLOR: (BLACK) SHOP APPLIED STRUCTURAL SILICONE SEALANT
S-2	DOW-CORNING 795 (1 PART SILICONE) COLOR: (BLACK) SHOP APPLIED WEATHER SEAL AND PERIMETER SEALANT
S-3	DOW-CORNING 795 (1 PART SILICONE) COLOR: (TO MATCH FRAME) SHOP APPLIED JOINERY SILICONE SEALANT
S-4	DOW-CORNING 795 (1 PART SILICONE) COLOR: (TO BE DETERMINED) FIELD JOINERY AND PERIMETER SILICONE SEALANT
S-5	DOW-CORNING 995 (1 PART SILICONE) COLOR: (BLACK) FIELD REGLAZE STRUCTURAL SILICONE SEALANT

FOR MIAMI-DADE CO. B.C.C.O.

Approved as complying with the Florida Building Code
Date 10/20/2011
NOA# 11-0401.03
Miami Dade Product Control
By

JEFFREY H MARSH
LICENSE
No 70018
STATE OF
FLORIDA
PROFESSIONAL ENGINEER
10/4/2011

GLASS COMPANY
1101 13TH STREET WEST RIVIERA BEACH, FLORIDA 33404
PH. (561) 863-7078 FAX (561) 863-7088
www.trainorglass.com
TRAINOR
ILLINOIS FLORIDA GEORGIA NEW JERSEY COLORADO TEXAS ARIZONA VIRGINIA MARYLAND

NO.	DATE	BY	REVISIONS
1	9/22/11	BBC	ADDED SETTING BLOCK COMMERCIAL WINDOW LISTED
2	9/26/11	BBC	ADDED NOTES TO GLAZING GASKETS AND TAPE

DESIGN ENGINEERING & CONSULTING Inc.
FB 972-644-4545
FAX 972-644-4594
2965 N. COLLINS BLVD. - SUITE 104
RICHARDSON, TEXAS 75080

Date	Scale
3-3-11	NONE

Drawing No
4326435

Drawing Title
90 PSF SMALL MISSILE IMPACT COVER SHEET

Sheet No
1/44

LISTS OF MATERIALS

FASTENERS

NO.	PROFILE	DESCRIPTION
F-1		#12-14 x 1 1/2" HWH SMS
F-4		#12-24 x 5/8" PH SMS (S.S. OR CAP SEAL)
F-5		12-24 x 3/4" HWH SMS
F-6		12-24 x 3/4" 300 SERIES FH UNDER CUT S.S. SCREW
F-7		12-24 x 1 1/2" PH SMS (S.S. OR CAP SEAL)
F-10	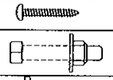	3/8" x 2" HEX HEAD THRU-BOLT w/ WASHER & LOCK NUT
F-11	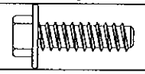	5/8-11 x 2 1/2" CONTI DUO-TAPTITE, Gr. 5 △ WITH 1/2" MIN THICKNESS STEEL
F-12		3/8-16 X 4" LONG FULLY THREADED H.H.M.B. GR.5 WITH (2) HH NUT ZINC PLATED
F-13	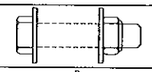	5/8" x 2 3/4" LONG HHMB (GR5) w/ (2) FLAT WASHERS AND LOCK NUT
F-14		3/8" x 1 3/4" FH BOLT w/ FLAT WASHER AND LOCK NUT
F-20		#8-32 x 5/8" P.H. S.M.S.
F-22		△1/4" HH BUILDEX TAPCON CONCRETE ANCHOR W/ 1" MIN EMBED
F-24		1/4"-20 x 3/4" 300 SERIES (S.S.) FH SMS
F-25		1/4" x 1" HEX HEAD THRU BOLT w/ WASHER AND LOCK NUT
F-26		5/8" DIA HILTI HIT-HY 150 MAX ADHESIVE ANCHOR w/ 5 5/8" MIN EMBEDMENT
F-29	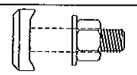	M16 (5/8") (GR8.8) 2 3/4" LONG HALFEN TEE-BOLTS
F-30	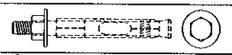	5/8" DIA. (5" LONG) HILTI KWIK BOLT III WITH 4" MIN EMBEDMENT
F-31	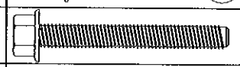	5/8" DIA (5" LONG) POWERS FASTENERS WEDGE BOLT △ WITH 2-1/2" MIN EMBEDMENT
F-32		#12-14 x 1 1/2" HWH DRIL-FLEX FASTENER
F-33		#6-32 x 1/2" 300 SERIES (S.S.) FH SMS
F-34	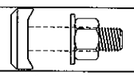	M16 (5/8") (GR8.8) 3" LONG HALFEN TEE-BOLTS
F-37		1/2" -13 X 2 1/2" CONTI DUO-TAPTITE, Gr. 5 △ WITH 1/2" MIN STEEL THICKNESS
F-38		5/8" x 3 1/2" LONG HHMB (GR5) w/ (2) FLAT WASHERS AND LOCK NUT
F-39		#12 x 3/4" PH SMS
F-40		3/8" x 1 1/2" FH MACHINE SCREW
F-41		3/8"-16 x 2" FH SMS w/ LOC-TITE
F-42	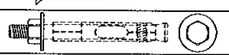	1/2" DIA. 5"LONG HILTI KWIK BOLT III WITH 4" MIN. EMBEDMENT
F-43		5/8"-11 x 2 3/4" FH BOLT w/ FLAT WASHER AND LOCK NUT
F-44		1/2"-13 x 1 1/2" 300 SERIES (S.S.) FH BOLT
F-45	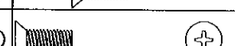	1/2"-13 x 1 1/2" 300 SERIES (S.S.) FH MACHINE BOLT w/ LOC-TITE
F-46	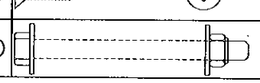	1/2" x 6" 300 SERIES (S.S.) HEX HEAD BOLT w/ (S.S.) FLAT WASHERS & (S.S.) NYLON LOCK NUT

FASTENERS (CONT)

NO.	PROFILE	DESCRIPTION
F-47	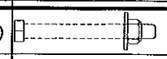	3/8" x 3 3/4" 300 SERIES (S.S.) BOLT w/ (S.S.) FLAT WASHER AND (S.S.) NYLON LOCK NUT
F-48	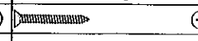	1/4" x 2" 300 SERIES (S.S.) FH MACHINE SCREW
F-49	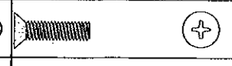	1/2"-13 x 2" 300 SERIES (S.S.) FH MACHINE BOLT w/ LOC-TITE
F-50		1/2"-13 x 2 1/2" 300 SERIES (S.S.) FH MACHINE BOLT w/ LOC-TITE
F-51		#12-14 x 1" UNDERCUT FH DRIL-FLEX FASTENER
F-52		#12 x 5/8" HWH SMS
F-53	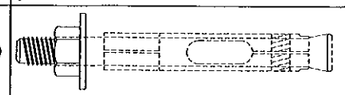	3/4" DIA HILTI KWIK BOLT III w/ 5" MIN EMBEDMENT
F-54	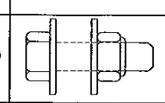	3/4" x 2 3/4" (GR5) HHMB w/ (2) FLAT WASHERS & LOCK NUT
F-55	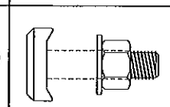	M20 (3/4") x 3" (GR8.8) HALFEN TEE-BOLTS
F-56	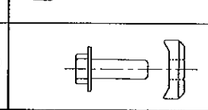	1/2" x 1 1/2" (GR5) HHMB w/ HALFEN CHANNEL NUT (LP5411)
F-57	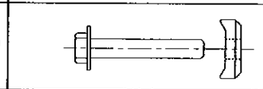	1/2" x 3" (GR5) HHMB w/ (2) FLAT WASHERS & HALFEN CHANNEL NUT (LP5411)
F-58		1/2" x 3" (GR5) HHMB w/ (2) FLAT WASHERS & LOCK NUT
F-59	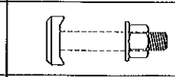	M12 (1/2") x 4" (GR8.8) HALFEN TEE BOLTS
F-60	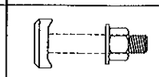	M12 (1/2") x 3" (GR8.8) HALFEN TEE BOLTS
F-61	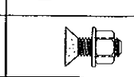	1/2"-13 x 1 1/2" FH MACHINE SCREW w/ FLAT WASHER & LOCK NUT
F-62	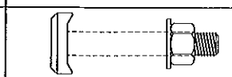	M16 (5/8") (GR8.8) 4" LONG HALFEN TEE-BOLTS △

FOR MIAMI-DADE CO. B.C.C.O.

Approved as complying with the Florida Building Code
Date 10/20/2011
NOA# 11-0405.03
Miami Dade Product Control
By

JEFFREY H MARSH LICENSE No 70018 STATE OF FLORIDA PROFESSIONAL ENGINEER
10/4/2011

GLASS COMPANY
1101 13TH STREET WEST RIVIERA BEACH, FLORIDA 33404
PH. (561) 863-7078 FAX (561) 863-7088
www.trainorglass.com
TRAINOR
ILLINOIS FLORIDA GEORGIA NEW JERSEY COLORADO TEXAS ARIZONA VIRGINIA MARYLAND

NO.	DATE	BY	REVISIONS
1	9/7/11	MD	UPDATED FASTENER INFORMATION

DESIGN ENGINEERING & CONSULTING Inc.
PHONE 972-444-2540 FAX 972-444-2554
2005 N. COLLINS BLVD., SUITE 100 RICHARDSON, TEXAS 75080

Date	Scale
3-3-11	NONE

Drawing No
4326435

Drawing Title
90 PSF SMALL MISSILE IMPACT LISTS OF MATERIALS

Sheet No
2 144

1: DESIGN PARAMETERS

DETERMINE THE WIND LOAD REQUIREMENT BASED ON WIND VELOCITY , BUILDING HEIGHT, AND WIND ZONE USING APPLICABLE ASCE 7 STANDARDS OR PROJECT WIND TUNNEL ANALYSIS

2: GLAZING TYPES AND SIZES

SEE CHART ON SHEET 7 FOR ALLOWABLE DESIGN LOAD CAPACITY FOR DESIRED GLAZING TYPES AND SIZE

3: MULLION LENGTHS

SEE CHARTS ON SHEET 8 FOR ALLOWABLE DESIGN LOAD CAPACITY OF MULLION HEIGHTS AND MODULE WIDTHS. THE CAPACITY SHOULD EQUAL OR EXCEED THE DESIGN LOAD GIVEN FOR THE SPECIFIC PROJECT.

4: ANCHOR OPTIONS

SEE DETAILS ON 21-30 TO SELECT ANCHOR AND SUBSTRATE OPTIONS WITH CAPACITY EQUAL TO OR GREATER THAN THE DESIGN LOAD GIVEN.

5: ENTIRE ASSEMBLY

MULTIPLE UNITS CAN BE INSTALLED SIDE BY SIDE FOR AN UNLIMITED OVERALL ROUGH OPENING

REFER TO GLAZING CHARTS ON SHEET 7 FOR ALLOWABLE GLAZING TYPES AND MAXIMUM SIZES

NOTICE: OVERALL SQUARE FOOTAGE MUST NOT EXCEED MAXIMUM AREA OF TESTED GLAZING.

NOTICE: 4 SIDED CAPTURED WITH 2 1/2" EXTERIOR COVERS ARE SHOWN IN ELEVATION.

REFER TO SHEETS 10-20 FOR 3 1/2" EXTERIOR COVERS AND 2-4 SIDED SSG OPTIONS.

REFER TO ANCHOR CHARTS ON SHEETS 21-30 FOR ALLOWABLE FRAMING , SUBSTRATES AND PRESSURES

DEAD LOAD ANCHOR

WIND LOAD ANCHOR

= COMBINED MODULES

= INSIDE CORNER MODULE

= OUTSIDE CORNER MODULE

= JAMB MODULE

= TYPICAL MODULE

= TYPICAL MODULE

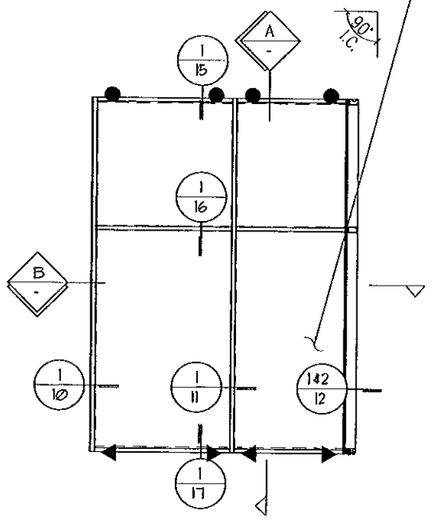

1 SINGLE SPAN ELEVATION
+ / - 90 PSF SMALL MISSILE IMPACT

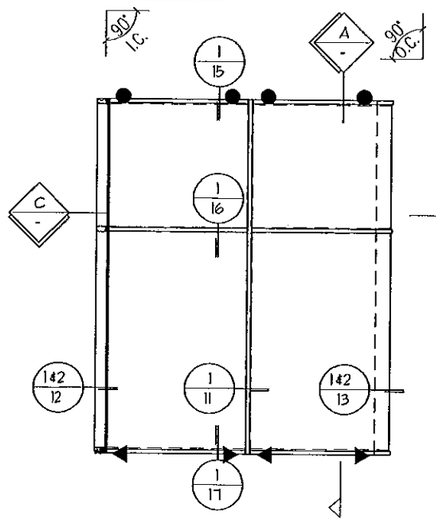

2 SINGLE SPAN ELEVATION
+ / - 90 PSF SMALL MISSILE IMPACT

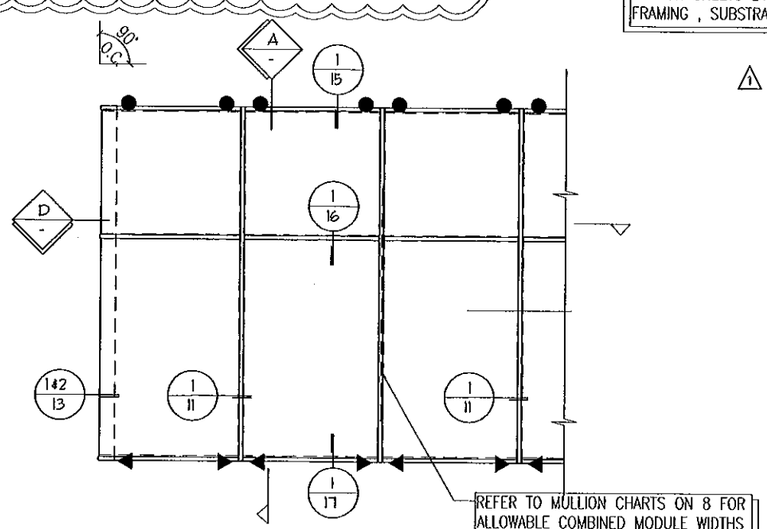

3 SINGLE SPAN ELEVATION
+ / - 90 PSF SMALL MISSILE IMPACT

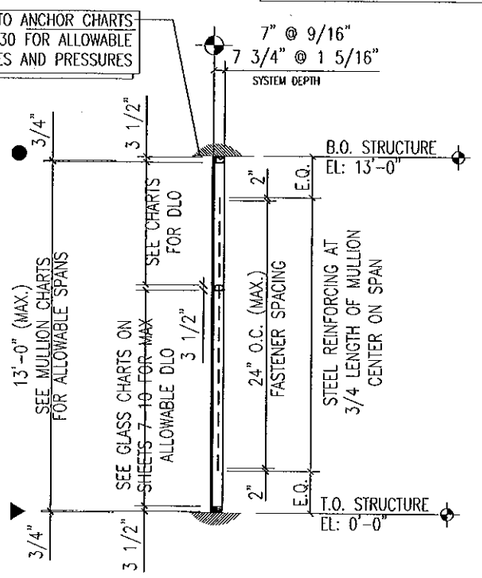

A WALL SECTION
+ / - 90 PSF SMALL MISSILE IMPACT

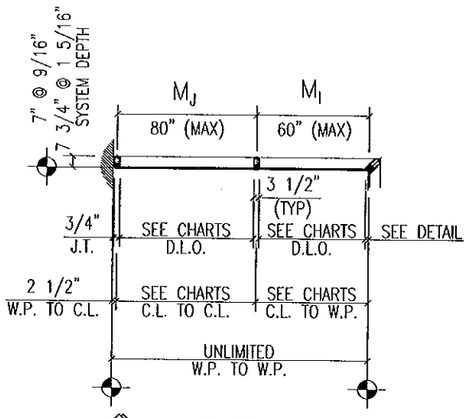

B KEY PLAN
+ / - 90 PSF SMALL MISSILE IMPACT

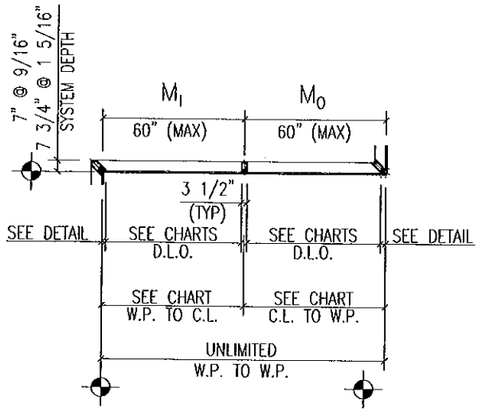

C KEY PLAN
+ / - 90 PSF SMALL MISSILE IMPACT

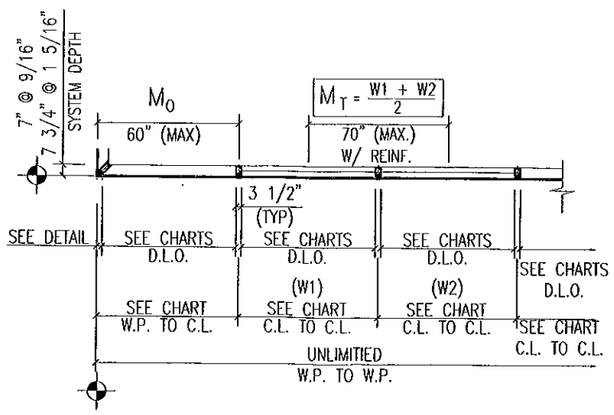

D KEY PLAN
+ / - 90 PSF SMALL MISSILE IMPACT

FOR MIAMI-DADE CO. B.C.C.O.

Approved as complying with the Florida Building Code
Date 10/20/2011
NOA# 11-0401.03
Miami Dade Product Control
By

JEFFREY H MARSH
LICENSE
No 70018
STATE OF FLORIDA
PROFESSIONAL ENGINEER
10/4/2011

GLASS COMPANY
1101 13TH STREET WEST RIVIERA BEACH, FLORIDA 33404
PH. (561) 863-7078 FAX (561) 863-7088
www.trainorglass.com
TRAINOR
ILLINOIS FLORIDA GEORGIA NEW JERSEY COLORADO TEXAS ARIZONA VIRGINIA MARYLAND

NO.	DATE	BY	REVISIONS
1	9/20/11	BSD	REVISED ELEVATION SCALE, ADDED ANCHOR LOCATIONS TO ELEVATIONS

DESIGN ENGINEERING & CONSULTING Inc.
2595 N. COLLINS BLVD., SUITE 120 RICHARDSON, TEXAS 75080
PH: 972-644-1940 FAX: 972-644-1954

Date	Scale
3-3-11	1/4" = 1'-0"

Drawing No
4326435

Drawing Title
90 PSF SMALL MISSILE IMPACT ELEVATIONS

Sheet No
3 / 44

REFER TO GLAZING CHART ON SHEET 7 FOR ALLOWABLE GLAZING TYPES AND MAXIMUM SIZES

NOTICE: OVERALL SQUARE FOOTAGE MUST NOT EXCEED MAXIMUM AREA OF TESTED GLAZING.

REFER TO MULLION CHART ON 8 FOR ALLOWABLE COMBINED MODULE WIDTHS AND REQUIRED REINFORCING TYPES

REFER TO ANCHOR CHARTS ON SHEETS 21-30 FOR ALLOWABLE FRAMING, SUBSTRATES AND PRESSURES

NOTICE: 4 SIDED CAPTURED WITH 2 1/2" EXTERIOR COVERS ARE SHOWN IN ELEVATION.

REFER TO SHEETS 10-20 FOR 3 1/2" EXTERIOR COVERS AND 2-4 SIDED SSG OPTIONS.

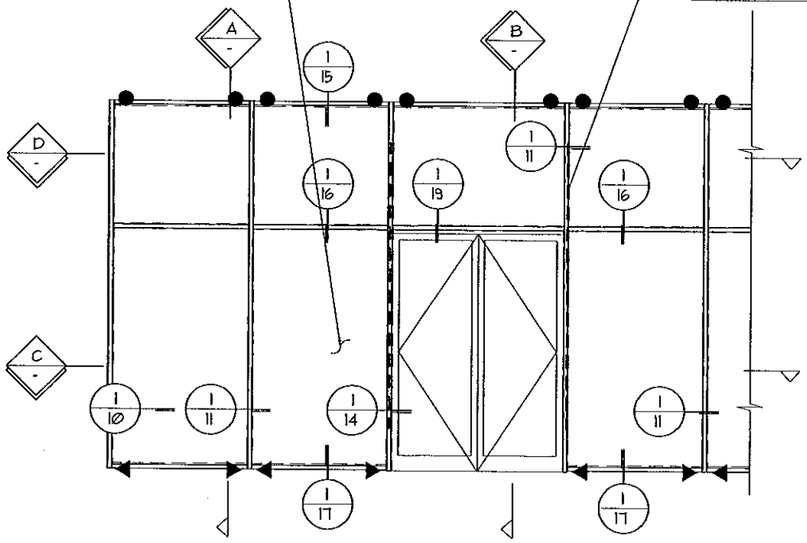

4 - SINGLE SPAN ELEVATION W/ DOORS
+ / - 90 PSF SMALL MISSILE IMPACT

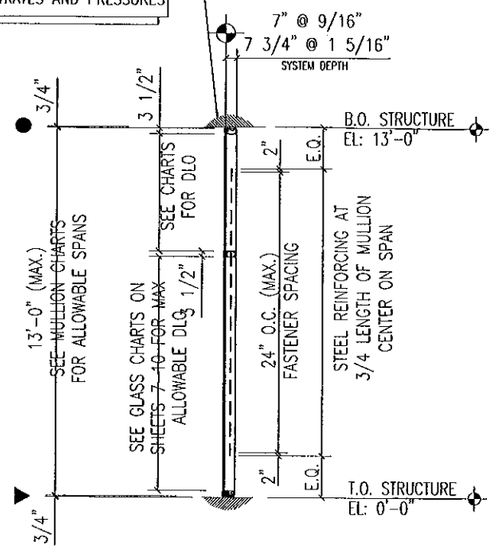

A - WALL SECTION
+ / - 90 PSF SMALL MISSILE IMPACT

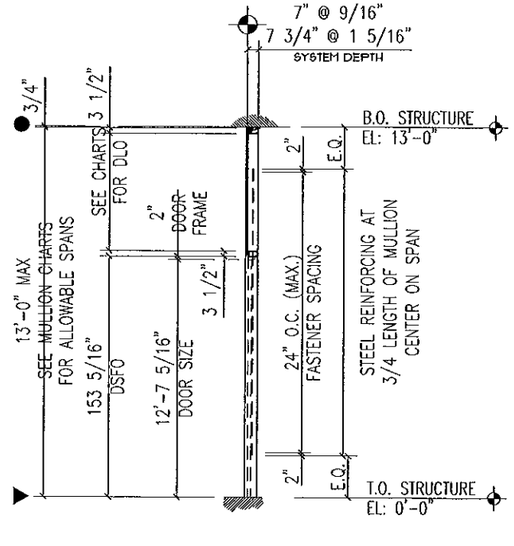

B - WALL SECTION W/ DOOR
+ / - 90 PSF SMALL MISSILE IMPACT

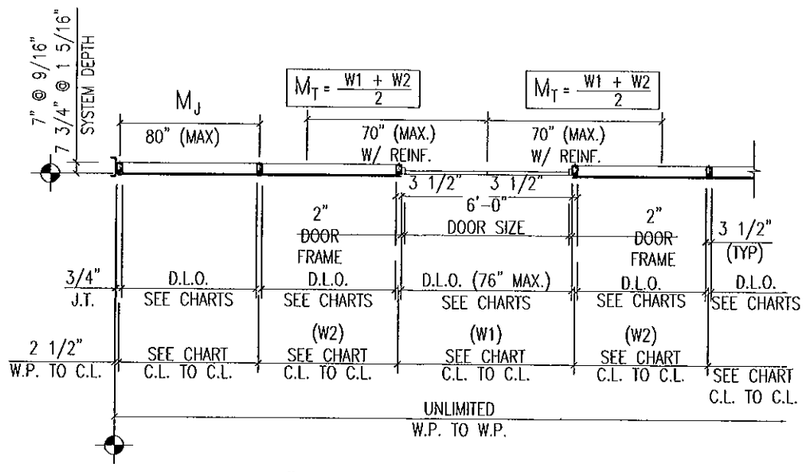

C - KEY PLAN W/ DOOR
+ / - 90 PSF SMALL MISSILE IMPACT

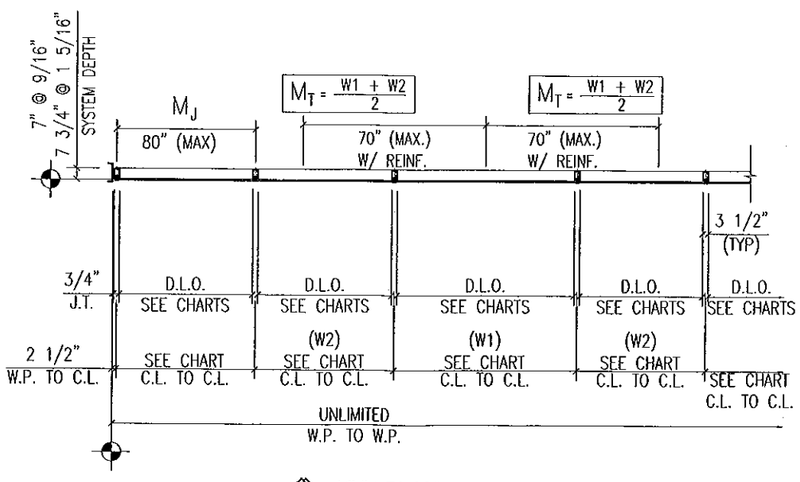

D - KEY PLAN
+ / - 90 PSF SMALL MISSILE IMPACT

- DEAD LOAD ANCHOR
- WIND LOAD ANCHOR
- = COMBINED MODULES
- = INSIDE CORNER MODULE
- = OUTSIDE CORNER MODULE
- = JAMB MODULE
- = TYPICAL MODULE
- = TYPICAL MODULE

1: DESIGN PARAMETERS

DETERMINE THE WIND LOAD REQUIREMENT BASED ON WIND VELOCITY, BUILDING HEIGHT, AND WIND ZONE USING APPLICABLE ASCE 7 STANDARDS OR PROJECT WIND TUNNEL ANALYSIS

2: GLAZING TYPES AND SIZES

SEE CHART ON SHEET 7 FOR ALLOWABLE DESIGN LOAD CAPACITY FOR DESIRED GLAZING TYPES AND SIZE

3: MULLION LENGTHS

SEE CHARTS ON SHEET 8 FOR ALLOWABLE DESIGN LOAD CAPACITY OF MULLION HEIGHTS AND MODULE WIDTHS. THE CAPACITY SHOULD EQUAL OR EXCEED THE DESIGN LOAD GIVEN FOR THE SPECIFIC PROJECT.

4: ANCHOR OPTIONS

SEE DETAILS ON 21-30 TO SELECT ANCHOR AND SUBSTRATE OPTIONS WITH CAPACITY EQUAL TO OR GREATER THAN THE DESIGN LOAD GIVEN.

5: ENTIRE ASSEMBLY

MULTIPLE UNITS CAN BE INSTALLED SIDE BY SIDE FOR AN UNLIMITED OVERALL ROUGH OPENING

FOR MIAMI-DADE CO. B.C.C.O.

Approved as complying with the Florida Building Code
Date 10/20/2011
NOA# 11-0421.03
Miami Dade Product Control
By

GLASS COMPANY
1101 13TH STREET WEST RIVIERA BEACH, FLORIDA 33404
PH. (561) 863-7078 FAX (561) 863-7088
www.trainorglass.com
TRAINOR
ILLINOIS FLORIDA GEORGIA NEW JERSEY COLORADO TEXAS ARIZONA VIRGINIA MARYLAND

NO.	DATE	BY	REVISIONS
1	6/22/11	GG	INCREASED ELEVATION SCALE, ADDED ANCHOR LOCATIONS TO CLADDING

DESIGN ENGINEERING & CONSULTING Inc
PH: 972-644-6044
FAX: 972-644-6064
2202 N. COLLINS BLVD., SUITE 100
RICHARDSON, TEXAS 75080

JEFFREY H MARSH LICENSE No 70018 STATE OF FLORIDA PROFESSIONAL ENGINEER 10/14/2011

Date	Scale
3-3-11	1/4" = 1'-0"

Drawing No
4326435

Drawing Title
90 PSF SMALL MISSILE IMPACT ELEVATIONS

Sheet No
4 / 44

REFER TO GLAZING CHART ON SHEET 7 FOR ALLOWABLE GLAZING TYPES AND MAXIMUM SIZES NOTICE: OVERALL SQUARE FOOTAGE MUST NOT EXCEED MAXIMUM AREA OF TESTED GLAZING.

REFER TO ANCHOR CHARTS ON SHEETS 21-30 FOR ALLOWABLE FRAMING, SUBSTRATES AND PRESSURES

REFER TO MULLION CHART ON 9 FOR ALLOWABLE COMBINED MODULE WIDTHS

7" @ 9/16"
7 3/4" @ 1 5/16"
SYSTEM DEPTH

T.O. STRUCTURE EL: 44'-0"
ANCHOR POINT EL: 29'-0"
ANCHOR POINT EL: 14'-0"
ANCHOR POINT EL: 0'-0"

UNIT DIM.

SEE GLASS CHARTS ON SHEETS 7-10 FOR MAX ALLOWABLE DLO

SEE CHARTS FOR DLO MAX 5 1/4"
SEE GLASS CHARTS ON SHEETS 7-10 FOR MAX ALLOWABLE DLO 3 1/2"
SEE CHARTS FOR DLO MAX 5 1/4"
SEE GLASS CHARTS ON SHEETS 7-10 FOR MAX ALLOWABLE DLO 3 1/2"

3 1/2"
1" 3/4" 19 1/2" 6"

15'-0" (MAX.) SEE CHART FOR MAX ANCHOR-WP DIM
15'-0" (MAX.) SEE CHART FOR MAX ANCHOR-ANCHOR
14'-0" (MAX.) SEE CHART FOR MAX WP-ANCHOR DIM

MULLION LENGTHS LIMITED TO 28'-0" FINISH AND EXTRUSION LIMITATIONS

3/4" 3 3/4" 2"

A WALL SECTION
+ / - 90 PSF SMALL MISSILE IMPACT

1: DESIGN PARAMETERS

DETERMINE THE WIND LOAD REQUIREMENT BASED ON WIND VELOCITY , BUILDING HEIGHT, AND WIND ZONE USING APPLICABLE ASCE 7 STANDARDS OR PROJECT WIND TUNNEL ANALYSIS

2: GLAZING TYPES AND SIZES

SEE CHART ON SHEET 7 FOR ALLOWABLE DESIGN LOAD CAPACITY FOR DESIRED GLAZING TYPES AND SIZE

3: MULLION LENGTHS

MULLION LENGTHS ARE LIMITED TO 28'-0" DUE TO EXTRUSION AND FINISH LIMITATIONS

4: ANCHOR POINT TO ANCHOR POINT

SEE CHART ON SHEET 9 FOR ALLOWABLE DESIGN LOAD CAPACITY OF ANCHOR POINTS AND MODULE WIDTHS. THE CAPACITY SHOULD EQUAL OR EXCEED THE DESIGN LOAD GIVEN FOR THE SPECIFIC PROJECT.

5: ANCHOR OPTIONS

SEE DETAILS ON 21-30 TO SELECT ANCHOR AND SUBSTRATE OPTIONS WITH CAPACITY EQUAL TO OR GREATER THAN THE DESIGN LOAD GIVEN.

6: ENTIRE ASSEMBLY

MULTIPLE UNITS CAN BE INSTALLED SIDE BY SIDE FOR AN UNLIMITED OVERALL ROUGH OPENING

DEAD LOAD ANCHOR

WIND LOAD ANCHOR

M_T = COMBINED MODULES
M_I = INSIDE CORNER MODULE
M_O = OUTSIDE CORNER MODULE
M_J = JAMB MODULE
W1 = TYPICAL MODULE
W2 = TYPICAL MODULE

NOTICE : 4 SIDED CAPTURED WITH 2 1/2" EXTERIOR COVERS ARE SHOWN IN ELEVATION.

REFER TO SHEETS 10-20 FOR 3 1/2" EXTERIOR COVERS AND 2-4 SIDED SSG OPTIONS.

5 MULTIPLE SPAN ELEVATION
+ / - 90 PSF SMALL MISSILE IMPACT

7" @ 9/16"
7 3/4" @ 1 5/16"
SYSTEM DEPTH

M_J 60" (MAX.) M_I 60" (MAX.)

3 1/2" (TYP)

3/4" J.T.
SEE CHARTS D.L.O. | SEE CHARTS D.L.O. | SEE DETAIL

2 1/2" W.P. TO C.L.
SEE CHARTS C.L. TO W.P. | SEE CHARTS C.L. TO W.P.

UNLIMITED W.P. TO W.P.

B KEY PLAN
+ / - 90 PSF SMALL MISSILE IMPACT

6 MULTIPLE SPAN ELEVATION
+ / - 90 PSF SMALL MISSILE IMPACT

7" @ 9/16"
7 3/4" @ 1 5/16"
SYSTEM DEPTH

M_I 60" (MAX.) M_O 60" (MAX.)

3 1/2" (TYP)

SEE DETAIL | SEE CHARTS D.L.O. | SEE CHARTS D.L.O. | SEE DETAIL

SEE CHART W.P. TO C.L. | SEE CHART C.L. TO W.P.

UNLIMITED W.P. TO W.P.

C KEY PLAN
+ / - 90 PSF SMALL MISSILE IMPACT

7 MULTIPLE SPAN ELEVATION
+ / - 90 PSF SMALL MISSILE IMPACT

7" @ 9/16"
7 3/4" @ 1 5/16"
SYSTEM DEPTH

M_O 60" (MAX.) $M_T = \frac{W1 + W2}{2}$ 60" (MAX.)

3 1/2" (TYP)

SEE DETAIL | SEE CHARTS D.L.O. | SEE CHARTS D.L.O. (W1) | SEE CHARTS D.L.O. (W2) | SEE CHARTS D.L.O. | SEE DETAIL

SEE CHART W.P. TO C.L. | SEE CHART C.L. TO W.P. | SEE CHART C.L. TO C.L. | SEE CHART C.L. TO C.L.

UNLIMITED W.P. TO W.P.

D KEY PLAN
+ / - 90 PSF SMALL MISSILE IMPACT

FOR MIAMI-DADE CO. B.C.C.O.

Approved as complying with the Florida Building Code
Date 10/20/2011
NOA# 11-0404.03
Miami-Dade Product Control
By

JEFFREY H MARSH LICENSE No 70018 STATE OF FLORIDA PROFESSIONAL ENGINEER
10/4/2011

GLASS COMPANY
1101 13TH STREET WEST RIVIERA BEACH, FLORIDA 33404
PH. (561) 863-7078 FAX (561) 863-7088
www.trainorglass.com
ILLINOIS FLORIDA GEORGIA NEW JERSEY COLORADO TEXAS ARIZONA VIRGINIA MARYLAND
TRAINOR

NO.	DATE	BY	REVISIONS
A	8/25/11	DEC	ADDED ANCHOR LOCATIONS TO ELEVATIONS
A	9/29/11	DEC	REVISED CAPTURE/WIPING DIMENSION TEXT

DESIGN ENGINEERING & CONSULTING Inc
FAX 972-644-0840
PH 972-644-2554
2902 N. COLLINS BLVD. - SUITE 160
RICHARDSON, TEXAS 75080

Date	Scale
3-3-11	1/4" = 1'-0"

Drawing No
4326435

Drawing Title
90 PSF SMALL MISSILE IMPACT ELEVATIONS

Sheet No
5 / 44

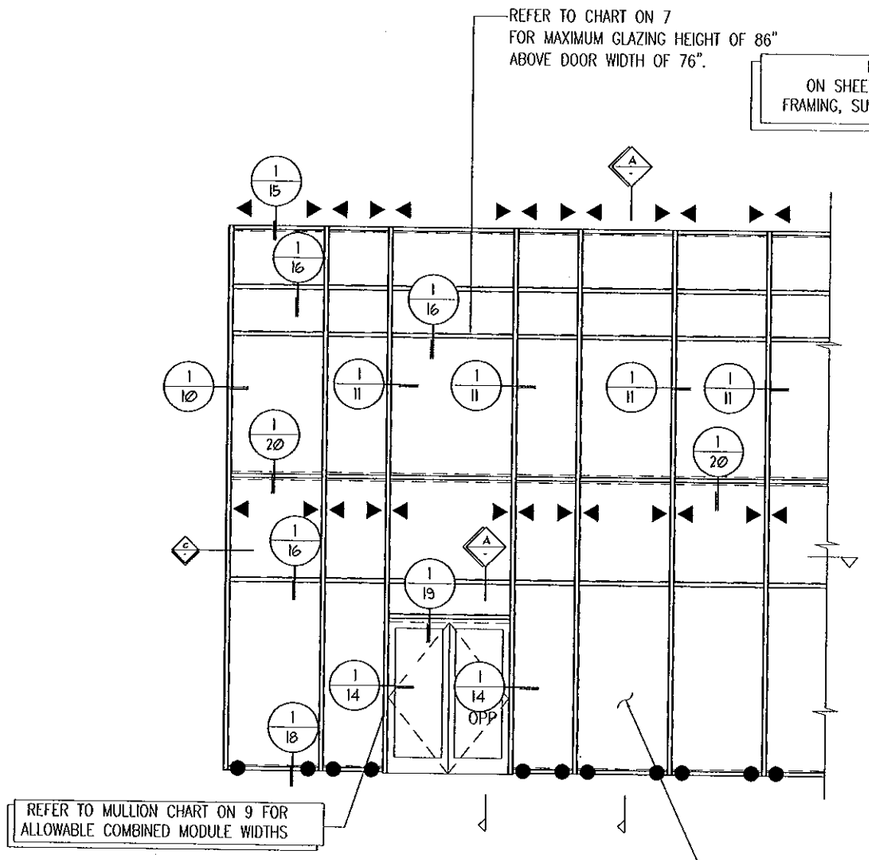

8 - MULTIPLE SPAN ELEVATION W/ DOORS
+ / - 90 PSF SMALL MISSILE IMPACT

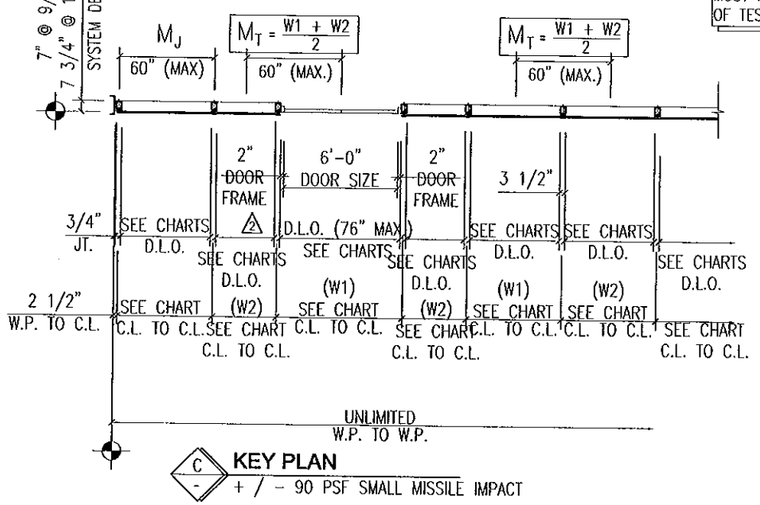

C - KEY PLAN
+ / - 90 PSF SMALL MISSILE IMPACT

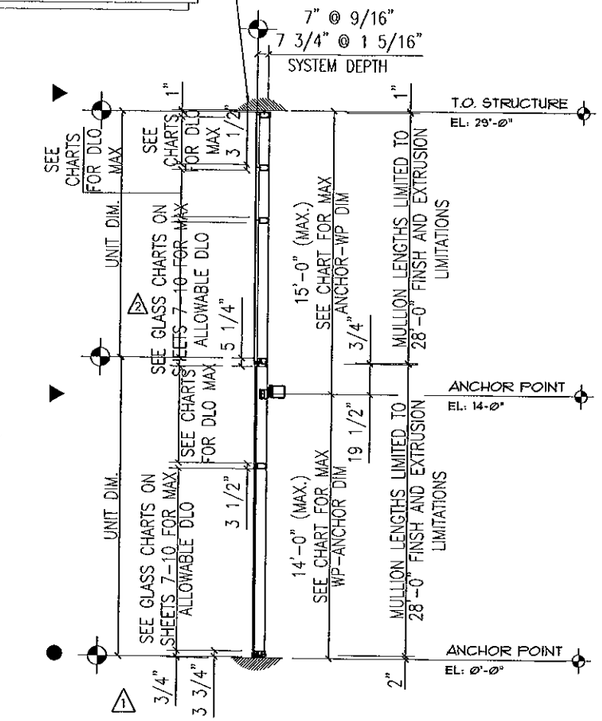

A - WALL SECTION
+ / - 90 PSF SMALL MISSILE IMPACT

REFER TO GLAZING CHARTS ON SHEET 7 FOR ALLOWABLE GLAZING TYPES AND MAXIMUM SIZES
NOTICE: OVERALL SQUARE FOOTAGE MUST NOT EXCEED MAXIMUM AREA OF TESTED GLAZING.

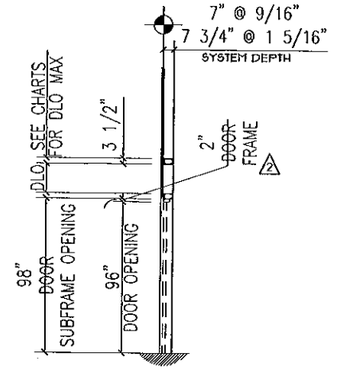

B - WALL SECTION
+ / - 90 PSF SMALL MISSILE IMPACT

- M_T = COMBINED MODULES
- M_I = INSIDE CORNER MODULE
- M_O = OUTSIDE CORNER MODULE
- M_J = JAMB MODULE
- W1 = TYPICAL MODULE
- W2 = TYPICAL MODULE

- DEAD LOAD ANCHOR
- WIND LOAD ANCHOR

1: DESIGN PARAMETERS

DETERMINE THE WIND LOAD REQUIREMENT BASED ON WIND VELOCITY, BUILDING HEIGHT, AND WIND ZONE USING APPLICABLE ASCE 7 STANDARDS OR PROJECT WIND TUNNEL ANALYSIS

2: GLAZING TYPES AND SIZES

SEE CHART ON SHEET 7 FOR ALLOWABLE DESIGN LOAD CAPACITY FOR DESIRED GLAZING TYPES AND SIZE

3: MULLION LENGTHS

MULLION LENGTHS ARE LIMITED TO 28'-0" DUE TO EXTRUSION AND FINISH LIMITATIONS

4: ANCHOR POINT TO ANCHOR POINT

SEE CHART ON SHEET 9 FOR ALLOWABLE DESIGN LOAD CAPACITY OF ANCHOR POINTS AND MODULE WIDTHS. THE CAPACITY SHOULD EQUAL OR EXCEED THE DESIGN LOAD GIVEN FOR THE SPECIFIC PROJECT.

5: ANCHOR OPTIONS

SEE DETAILS ON 21-30 TO SELECT ANCHOR AND SUBSTRATE OPTIONS WITH CAPACITY EQUAL TO OR GREATER THAN THE DESIGN LOAD GIVEN.

6: ENTIRE ASSEMBLY

MULTIPLE UNITS CAN BE INSTALLED SIDE BY SIDE FOR AN UNLIMITED OVERALL ROUGH OPENING

NOTICE : 4 SIDED CAPTURED WITH 2 1/2" EXTERIOR COVERS ARE SHOWN IN ELEVATION.

REFER TO SHEETS 10-20 FOR 3 1/2" EXTERIOR COVERS AND 2-4 SIDED SSG OPTIONS.

FOR MIAMI-DADE CO. B.C.C.O.

Approved as complying with the Florida Building Code
Date 10/20/2011
NOA# 11-0201.03
Miami-Dade Product Control
By

JEFFREY H MARSH LICENSE No 70018 STATE OF FLORIDA PROFESSIONAL ENGINEER 10/4/2011

GLASS COMPANY
1101 13TH STREET WEST RIVIERA BEACH, FLORIDA 33404
PH. (561) 863-7078 FAX (561) 863-7088
www.trainorglass.com
TRAINOR
ILLINOIS FLORIDA GEORGIA NEW JERSEY COLORADO TEXAS ARIZONA VIRGINIA MARYLAND

NO.	DATE	BY	REVISIONS
1	9/22/11	BD	ADDED ANCHOR LOCATIONS TO ELEVATIONS
2	9/28/11	BD	ADDED WORKSPACE DIMENSION TEXT

DESIGN ENGINEERING & CONSULTING Inc
2222 N. COLLEGE BLVD., SUITE 100 CORSICANA, TEXAS 75110
PH: 972-344-2460 FAX: 972-344-4124

Date	Scale
3-3-11	1/4" = 1'-0"

Drawing No
4326435

Drawing Title
90 PSF SMALL MISSILE IMPACT ELEVATIONS

Sheet No
6 / 44

MAX. DESIGN PRESSURES (PSF) FOR VARIOUS GLASS TYPES

SQUARE FEET	GLASS WIDTH (DLO)	GLASS HEIGHT (DLO)	GLASS & INFILL TYPES GL1 1 5/16" THK.	GL2 9/16" THK.	GL3 1 5/16" THK.
22.12	48	60	+90, -90	+90, -90	+90, -90
23.86	52				
24.73	54				
25.82	56.5				
27.34	60				
29.96	66				
32.57	72				
34.32	76				
26.34	48	72	+90, -90	+90, -90	+90, -90
28.42	52				
29.46	54				
30.76	56.5				
32.57	60				
35.69	66				
38.80	72				
40.88	76				
30.57	48	84	+90, -90	+90, -90	+90, -90
32.98	52				
34.19	54				
35.69	56.5				
37.80	60				
41.42	66				
45.03	72				
47.44	76				
31.28	48	86	+90, -90	+90, -90	
33.74	52				
34.98	54				
36.52	56.5				
38.67	60				
42.37	66				
46.07	72				
48.54	76				
34.80	48	96	+90, -90	+90, -90	
37.55	52				
38.92	54				
40.63	56.5				
43.03	60				
47.15	66				
39.03	48	108	+90, -90	+90, -90	
42.11	52				
43.65	54				
45.57	56.5				
41.76	48	115.75	+90, -90		
45.05	52				
46.70	54				
48.76	56.5				

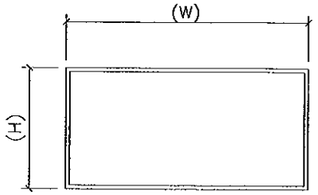

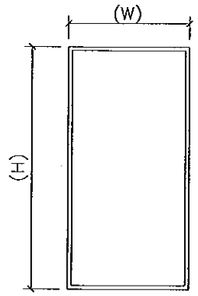

1 7/32" SILICONE BOND WIDTH CHART

WINDLOAD	(SMALLEST LEG OF LARGEST LITE OF GLASS) – INCHES											
	24	30	36	42	48	52	54	56.5	60	66	72	76
90PSF	OK	OK	OK	OK	OK	OK	OK	OK	OK	OK	OK	OK

A: 1 7/32" SILICONE BOND WIDTH IS ACCEPTABLE FOR ALL GLAZING SIZES WITHIN CHART.
B: REFER TO NOTE (1)

NOTES:

1: ALL GLAZING TYPES AND SIZES ARE ACCEPTABLE AT 90PSF FOR :
(4) SIDED CAPTURED, (2) SIDED SSG AND (4) SIDED SSG
- REFER TO SHEET 10 FOR JAMB CONDITIONS AND GLAZING OPTIONS
- REFER TO SHEET 11 FOR TYPICAL MULLION CONDITIONS AND GLAZING OPTIONS
- REFER TO SHEET 12 FOR INSIDE 90deg. CORNER CONDITIONS
- REFER TO SHEET 13 FOR OUTSIDE 90deg. CORNER CONDITIONS
- REFER TO SHEET 14 FOR MULLION AT DOOR CONDITIONS AND GLAZING OPTIONS
- REFER TO SHEET 15 FOR HEAD HORIZONTAL CONDITIONS AND GLAZING OPTIONS
- REFER TO SHEET 16 FOR INTERMEDIATE HORIZONTAL CONDITIONS AND GLAZING OPTIONS
- REFER TO SHEETS 17 & 18 FOR SILL HORIZONTAL CONDITIONS AND GLAZING OPTIONS
- REFER TO SHEET 19 FOR DOOR HEADER CONDITIONS AND GLAZING OPTIONS
- REFER TO SHEET 20 FOR EXPANSION (STACK) HORIZONTAL CONDITIONS AND GLAZING OPTIONS

2: ALL GLAZING SIZES MUST MEET ASTM E1300-04 WITH A SQUARE FOOTAGE LESS THAN OR EQUAL TO THE MAXIMUM TESTED SQUARE FOOT SIZE. REFER TO GLAZING OPTIONS CHART

3: 1 3/8" MINIMUM GLASS BITE AT ALL GLAZING AND FRAMING OPTIONS
UP TO 2" MAX. GLASS BITE AT STRUCTURAL SILICONE GLAZED STACK HORIZONTALS. △1

4: 1/4" X 1 7/32" MINUMUM SILICONE BOND AT ALL GLAZING AND FRAMING OPTIONS

5: GLAZING FORMULA = D.L.O. + 2 3/4" HORIZONTALLY AND VERTICALLY. REFER TO D.L.O. ON SHOP DRAWINGS FOR DIMENSION (H) AND (W)

GLAZING OPTIONS	MAXIMUM TESTED GLASS AND PANELS	
GL1 1/2" AIR SPACE: 1/4" HS / .035 SENTRYGLAS-MDCA △1 / 1/4" HS / 1/4" TEMPERED	59.25" X 121" = 49.79 SQ. FT.	+90/-90
GL2: 1/4" HS / .035 SENTRYGLAS-MDCA △1 / 1/4" HS	59.25" X 99.125" = 40.79 SQ. FT.	+90/-90
GL3: .060 ALUM. PAN / 1" RIGID INSULATION / 4MM COMPOSITE METAL — EXTERIOR △2	59.25" X 74.875" = 30.81 SQ. FT.	+90/-90

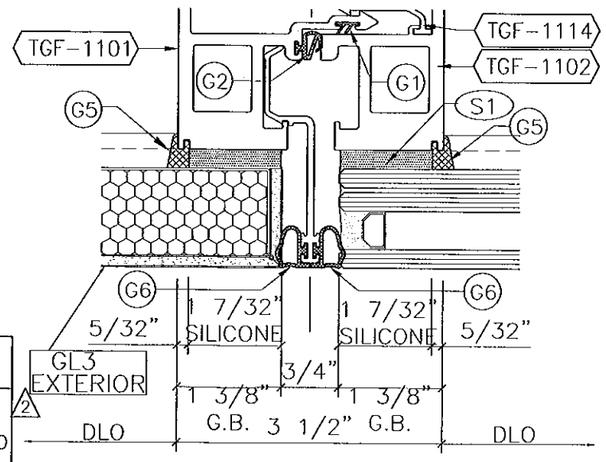

1 VERTICAL BOND WIDTH AND GLASS BITE

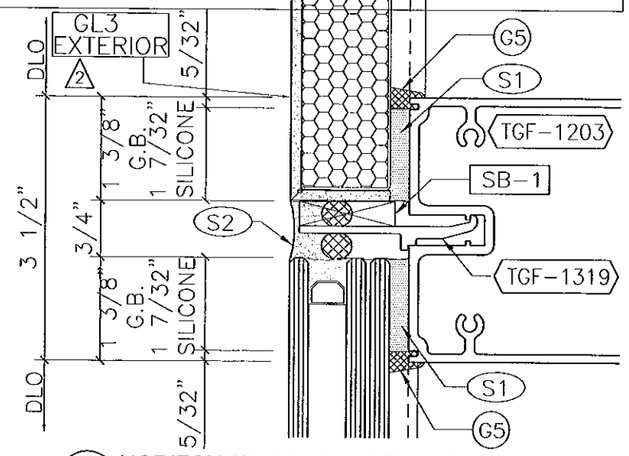

2 HORIZONTAL BOND WIDTH AND GLASS BITE

FOR MIAMI-DADE CO. B.C.C.O.

Approved as complying with the Florida Building Code
Date 10/20/2011
NOA# 11-0401.03
Miami-Dade Product Control
By

JEFFREY H MARSH LICENSE No 70018 STATE OF FLORIDA PROFESSIONAL ENGINEER
10/4/2011

GLASS COMPANY
1101 13TH STREET WEST RIVIERA BEACH, FLORIDA 33404
PH. (561) 863-7078 FAX (561) 863-7088
www.trainorglass.com
TRAINOR
ILLINOIS FLORIDA GEORGIA NEW JERSEY COLORADO TEXAS ARIZONA VIRGINIA MARYLAND

NO.	DATE	BY	REVISIONS
1	8/22/11	GC	UPWARD WIND LOADS INCREASED AND ADDED WIN. GLASS
2	8/29/11	BE	ADDED EXTERIOR NOTE
3	-	-	-
4	-	-	-

DESIGN ENGINEERING & CONSULTING Inc.
2295 CORPORATE BLVD. - SUITE 240 BOCA RATON, FLORIDA 33431
PH: 772-344-4344 FAX: 772-344-4364

Date 3-3-11	Scale HALF
Drawing No 4326435	
Drawing Title 90 PSF SMALL MISSILE IMPACT GLASS CHART	
Sheet No 7 / 44	

Mullion Span Chart with End Reactions (lbf)

WL (+/-) = 90 psf

Module (in.) M_T, M_O, M_I, M_J	Mull Height H (in.)	Mull Type 1	Mull Type 2	Jamb Type 3	Jamb Type 4	Corner Type 5	Corner Type 6
54	96	1620	1620	810	810	1146	1146
57		1710	1710	855	855	1209	1209
60		1800	1800	900	900	1273	1273
64		X	1920	960	960	X	X
68		X	2040	1020	1020	X	X
70		X	2100	1050	1050	X	X
80		X	X	1200	1200	X	X
54	102	1721	1721	861	861	1217	1217
57		1817	1817	908	908	1285	1285
60		1913	1913	956	956	1352	1352
64		X	2040	1020	1020	X	X
68		X	2168	1084	1084	X	X
70		X	2231	1116	1116	X	X
80		X	X	1275	1275	X	X
54	114	1924	1924	962	962	1360	1360
57		2031	2031	1015	1015	1436	1436
60		2138	2138	1069	1069	1511	1511
64		X	2280	1140	1140	X	X
68		X	2423	1211	1211	X	X
70		X	2494	1247	1247	X	X
80		X	X	1425	1425	X	X
54	120	2025	2025	1013	1013	1432	1432
57		2138	2138	1069	1069	1511	1511
60		2250	2250	1125	1125	1591	1591
64		X	2400	1200	1200	X	X
68		X	2550	1275	1275	X	X
70		X	2625	1313	1313	X	X
80		X	X	1500	1500	X	X
54	132	2228	2228	1114	1114	1575	1575
57		2351	2351	1176	1176	1663	1663
60		2475	2475	1238	1238	1750	1750
64		X	2640	1320	1320	X	X
68		X	2805	1403	1403	X	X
70		X	2888	1444	1444	X	X
80		X	X	1650	1650	X	X
54	144	2430	2430	1215	1215	1718	1718
57		2565	2565	1283	1283	1814	1814
60		2700	2700	1350	1350	1909	1909
64		X	2880	1440	1440	X	X
68		X	3060	1530	1530	X	X
70		X	3150	1575	1575	X	X
80		X	X	1800	1800	X	X
54	156	2633	2633	1316	1316	1861	1861
57		2779	2779	1389	1389	1965	1965
60		2925	2925	1463	1463	2068	2068
64		X	3120	1560	1560	X	X
68		X	3315	1658	1658	X	X
70		X	3413	1706	1706	X	X
80		X	X	1950	1950	X	X
54	168	2835	X	1418	1418	2005	2005
57		2993	X	1496	1496	2116	2116
60		3150	X	1575	1575	2227	2227
64		X	X	X	X	X	X
68		X	X	X	X	X	X
70		X	X	X	X	X	X
80		X	X	X	X	X	X

– REFER TO SHEET 19 FOR DOOR HEADER CONDITIONS AND GLAZING OPTIONS

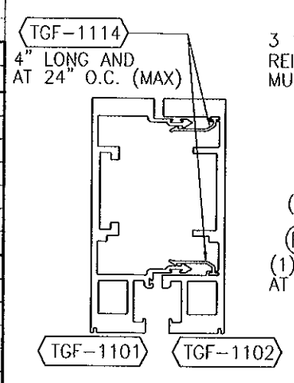

1 MULLION TYPE #1
TGF–1101 AND TGF–1102 (WITHOUT REINFORCING)
ALUMINUM Ixx = 32.005 IN^4
Sxx = 10.164 IN^3

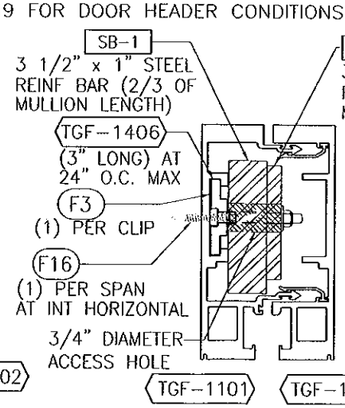

2 MULLION TYPE #2
TGF–1101 AND TGF–1102 (WITH REINFORCING)
ALUMINUM Ixx = 44.813 IN^4
Sxx = 14.756 IN^3

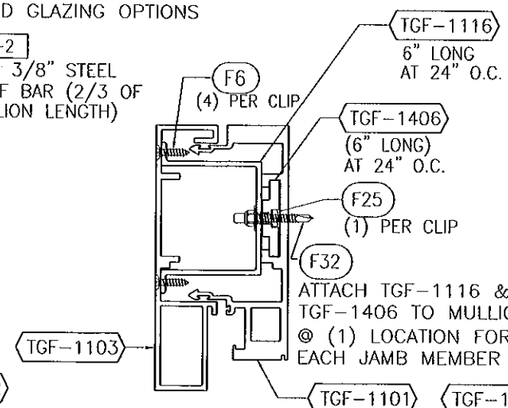

3 MULLION (JAMB) TYPE #3
TGF–1101 AND TGF–1103/TGF–1116 (WITHOUT REINFORCING)
ALUMINUM Ixx = 27.956 IN^4
Sxx = 8.404 IN^3

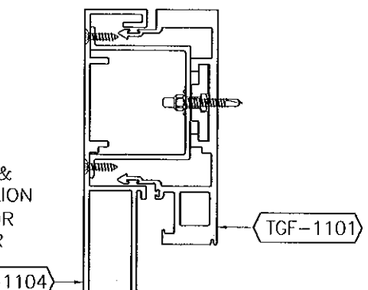

4 MULLION (JAMB) TYPE #4
TGF–1101 AND TGF–1103/TGF–1116 (WITHOUT REINFORCING)
ALUMINUM Ixx = 30.986 IN^4
Sxx = 8.907 IN^3

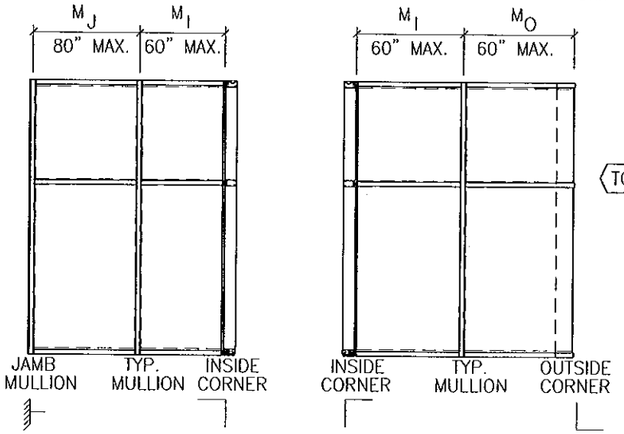

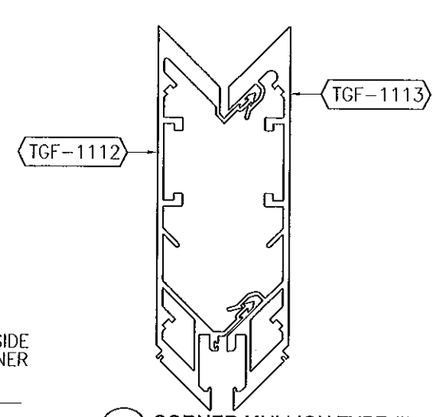

5 CORNER MULLION TYPE #5
TGF–1112 AND TGF–1113 (WITHOUT REINFORCING)
ALUMINUM Ixx = 91.202 IN^4
Sxx = 17.443 IN^3

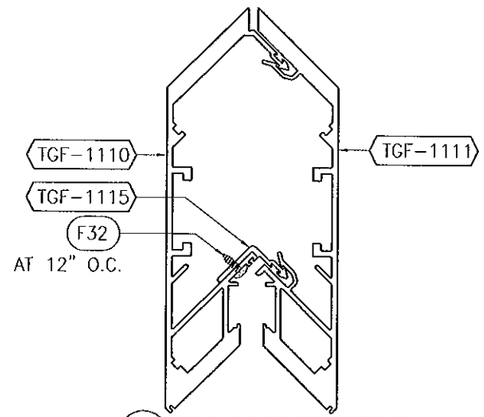

6 CORNER MULLION TYPE #6
TGF–1110 AND TGF–1111 (WITHOUT REINFORCING)
ALUMINUM Ixx = 103.923 IN^4
Sxx = 18.06 IN^3

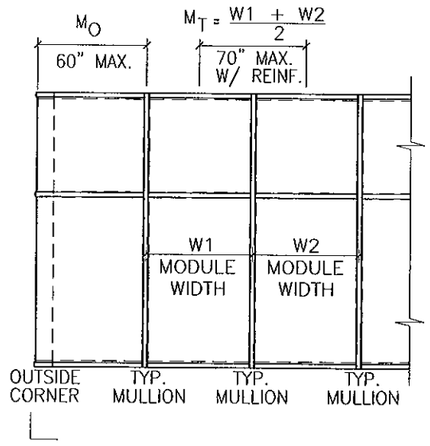

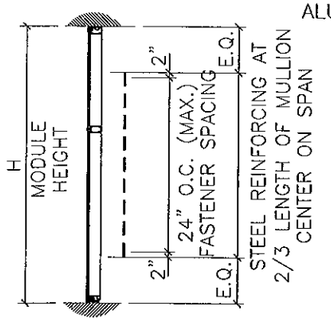

GENERAL NOTES:

- H = MAXIMUM MULLION SPAN
- M_T = MAXIMUM COMBINED MODULES $\frac{W1 + W2}{2}$
- M_I = MAXIMUM INSIDE CORNER MODULE
- M_O = MAXIMUM OUTSIDE CORNER MODULE
- M_J = MAXIMUM JAMB MODULE
- W1 = TYPICAL MODULE
- W2 = TYPICAL MODULE
- – FOR SINGLE SPAN MAXIMUM DEFLECTION = L/180 OR 1" (WHICHEVER IS LESS)
- – SPANS ARE LIMITED BY MAXIMUM TESTED END REACTIONS

FOR MIAMI-DADE CO. B.C.C.O.

Approved as complying with the Florida Building Code
Date 10/20/2011
NOA# 11-0401.03
Miami-Dade Product Control
By

JEFFREY H MARSH LICENSE No 70018 STATE OF FLORIDA PROFESSIONAL ENGINEER 10/4/2011

GLASS COMPANY
1101 13TH STREET WEST RIVIERA BEACH, FLORIDA 33404
PH. (561) 863-7078 FAX (561) 863-7088
www.trainorglass.com
TRAINOR
ILLINOIS FLORIDA GEORGIA NEW JERSEY COLORADO TEXAS ARIZONA VIRGINIA MARYLAND
DESIGN ENGINEERING & CONSULTING

NO.	DATE	BY
	-	-

Date	Scale
3-3-11	HALF

Drawing No 4326435

Drawing Title 90 PSF SMALL MISSILE IMPACT MULLION CHART

Sheet No 8 / 44

Multi-Span w/ Stack Horizontal Application and Support Reactions (lbf)

	WL (+/-) =	90	psf		
	Mull	Jamb	Jamb	Corner	Corner
⚠1	Type 1	Type 3	Type 4	Type 5	Type 6
M_T	L / R	L / R	L / R	L / R	L / R
3'-0"	14'-0" / 15'-0"	14'-0" / 15'-0"	14'-0" / 15'-0"	14'-0" / 15'-0"	14'-0" / 15'-0"
R_S	1667	833	833	1179	1179
R_M	4413	2207	2207	3120	3120
R_H	1784	892	892	1262	1262
D	570	208	285	570	570
3'-6"	14'-0" / 15'-0"	14'-0" / 15'-0"	14'-0" / 15'-0"	14'-0" / 15'-0"	14'-0" / 15'-0"
R_S	1945	972	972	1375	1375
R_M	5149	2574	2574	3641	3641
R_H	2082	1041	1041	1472	1472
D	665	242	333	665	665
4'-0"	14'-0" / 15'-0"	14'-0" / 15'-0"	14'-0" / 15'-0"	14'-0" / 15'-0"	14'-0" / 15'-0"
R_S	2222	1111	1111	1571	1571
R_M	5884	2942	2942	4161	4161
R_H	2379	1190	1190	1682	1682
D	760	277	380	760	760
4'-6"	14'-0" / 15'-0"	14'-0" / 15'-0"	14'-0" / 15'-0"	14'-0" / 15'-0"	14'-0" / 15'-0"
R_S	2500	1250	1250	1768	1768
R_M	6620	3310	3310	4681	4681
R_H	2677	1338	1338	1893	1893
D	855	312	428	855	855
5'-0"	14'-0" / 15'-0"	14'-0" / 15'-0"	14'-0" / 15'-0"	14'-0" / 15'-0"	14'-0" / 15'-0"
R_S	2778	1389	1389	1964	1964
R_M	7355	3678	3678	5201	5201
R_H	2974	1487	1487	2103	2103
D	950	346	475	950	950

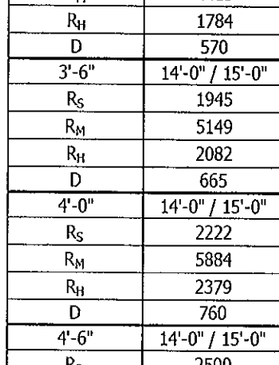

1 MULLION TYPE #1
TGF-1101 AND TGF-1102
(WITHOUT REINFORCING)
ALUMINUM Ixx = 32.005 IN^4
Sxx = 10.164 IN^3

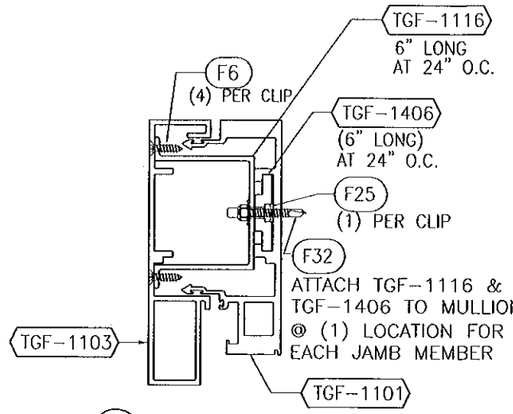

3 MULLION (JAMB) TYPE #3
TGF-1101 AND TGF-1103/TGF-1116
(WITHOUT REINFORCING)
ALUMINUM Ixx = 27.956 IN^4
Sxx = 8.404 IN^3

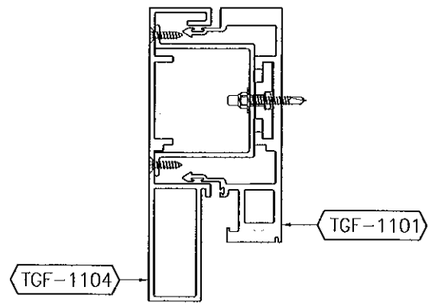

4 MULLION (JAMB) TYPE #4
TGF-1101 AND TGF-1103/TGF-1116
(WITHOUT REINFORCING)
ALUMINUM Ixx = 30.986 IN^4
Sxx = 8.907 IN^3

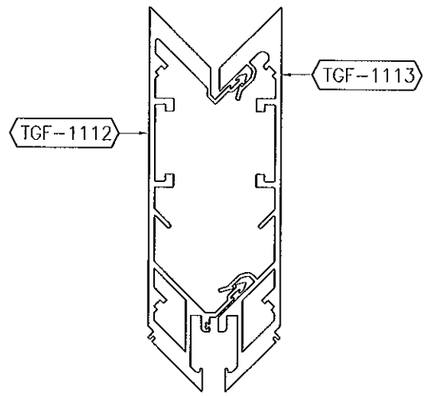

5 CORNER MULLION TYPE #5
TGF-1112 AND TGF-1113
(WITHOUT REINFORCING)
ALUMINUM Ixx = 91.202 IN^4
Sxx = 17.443 IN^3

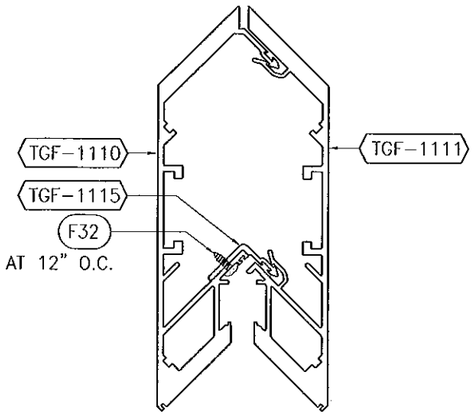

6 CORNER MULLION TYPE #6
TGF-1110 AND TGF-1111
(WITHOUT REINFORCING)
ALUMINUM Ixx = 103.923 IN^4
Sxx = 18.06 IN^3

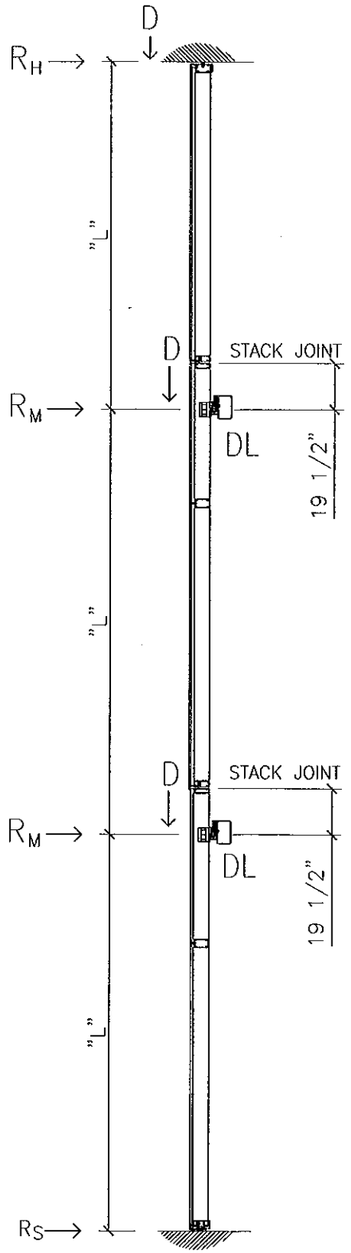

GENERAL NOTES:

- L = DISTANCE BETWEEN ANCHOR POINTS
- R_H = MAXIMUM REACTION AT HEAD ANCHOR
- R_M = MAXIMUM REACTION AT MIDSPAN ANCHOR
- R_S = MAXIMUM REACTION AT SILL ANCHOR
- D = MAXIMUM DEAD LOAD REACTION
- DL = DEAD LOAD ANCHOR POINT
- WL = WIND LOAD ANCHOR POINT

- FOR MULTIPLE SPAN MAXIMUM DEFLECTION = L/180 OR 1" (WHICHEVER IS LESS)
- SPANS ARE LIMITED BY MAXIMUM TESTED END REACTIONS

FOR MIAMI-DADE CO. B.C.C.O.

Approved as complying with the Florida Building Code
Date 10/20/2011
NOA# 11-0401.03
Miami Dade Product Control
By

JEFFREY H MARSH
LICENSE
No 70018
STATE OF
FLORIDA
PROFESSIONAL ENGINEER
10/4/2011

GLASS COMPANY
1101 13TH STREET WEST RIVIERA BEACH, FLORIDA 33404
PH. (561) 863-7078 FAX (561) 863-7088
www.trainorglass.com
TRAINOR
ILLINOIS FLORIDA GEORGIA NEW JERSEY COLORADO TEXAS ARIZONA VIRGINIA MARYLAND

NO.	DATE	BY	REVISIONS
1	9/22/11	GEC	ADDED WALL #2 - NOT USED

DESIGN ENGINEERING & CONSULTING Inc.

Date	Scale
3-3-11	QUARTER

Drawing No
4326435

Drawing Title
90 PSF
SMALL MISSILE IMPACT
MULLION CHART

Sheet No
9 / 44

PERIMETER SEALANT OPTIONS

DOW CORNING 790 SILICONE
DOW CORNING 791 SILICONE
DOW CORNING 795 SILICONE
TREMCO SPECTRUM 2

ALTERNATE PERIMETER SEALANT TYPES AND JOINT SIZES SHALL BE DESIGNED AND APPROVED BY DESIGN PROFESSIONAL OF RECORD AND/OR THE SEALANT MANUFACTURER.

NOTE:
SEE SHEET 21 FOR ANCHORAGE CONDITIONS

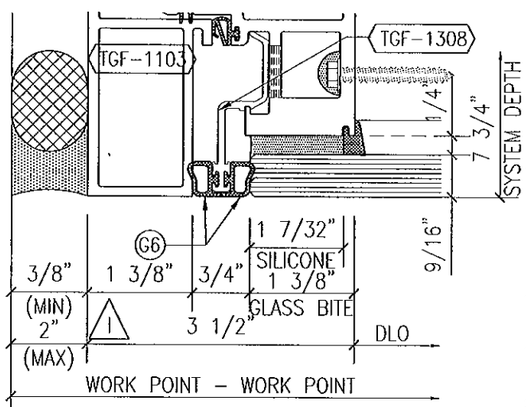

1 SSG JAMB MULLION
w/ 9/16" GLASS

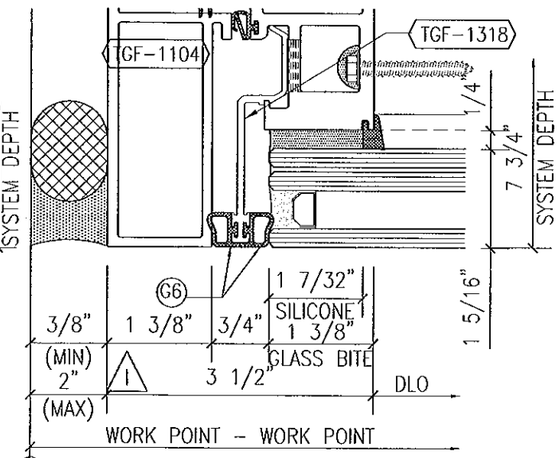

1 SSG JAMB MULLION
w/ 1 5/16" GLASS

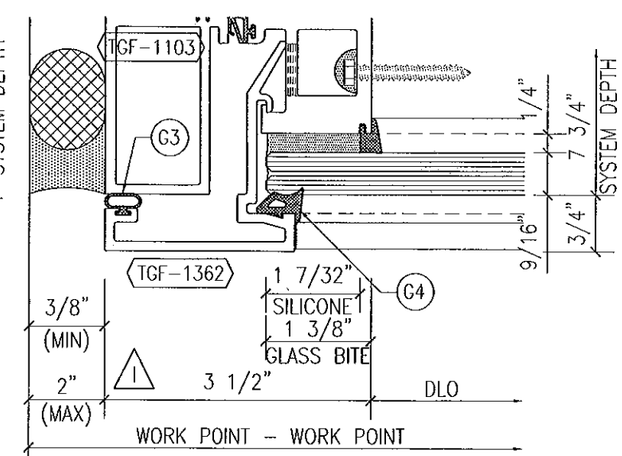

1 LEFT JAMB MULLION
w/ 9/16" GLASS

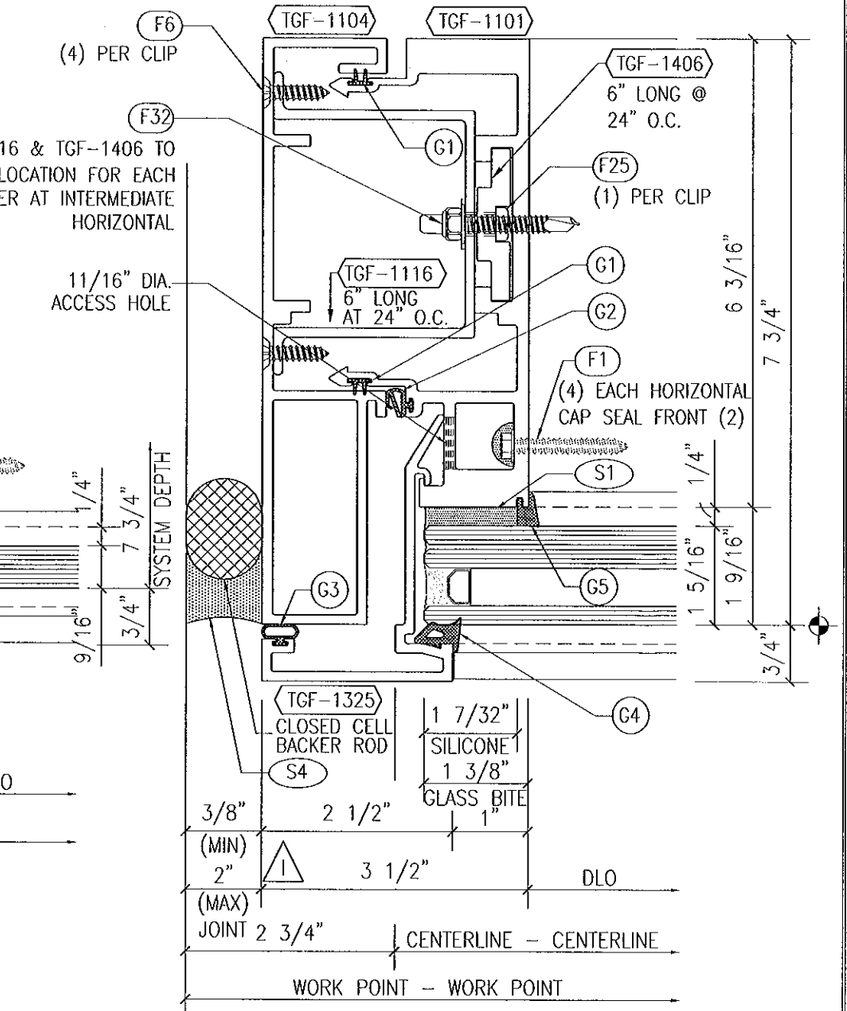

1 LEFT JAMB MULLION
w/ 1 5/16" GLASS

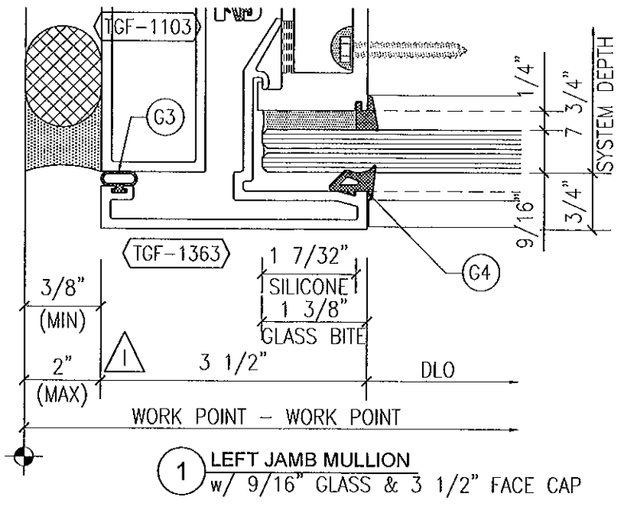

1 LEFT JAMB MULLION
w/ 9/16" GLASS & 3 1/2" FACE CAP

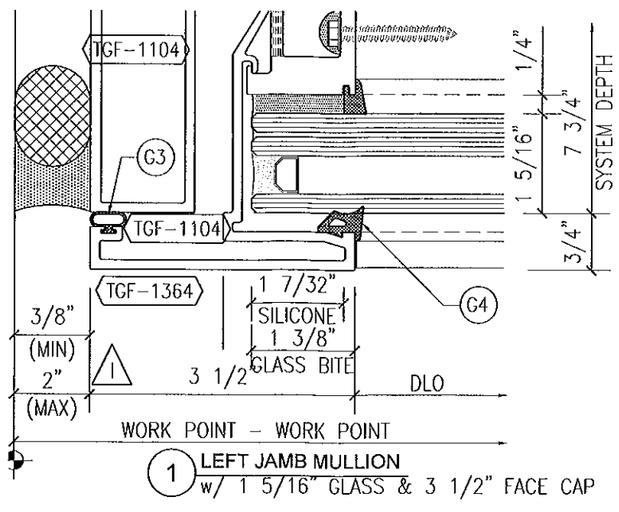

1 LEFT JAMB MULLION
w/ 1 5/16" GLASS & 3 1/2" FACE CAP

FOR MIAMI-DADE CO. B.C.C.O.

Approved as complying with the Florida Building Code
Date 10/20/2011
NOA# 11-0401.03
Miami Dade Product Control
By

JEFFREY H MARSH
LICENSE
No 70018
STATE OF FLORIDA
PROFESSIONAL ENGINEER
10/4/2011

TRAINOR
GLASS COMPANY
1101 13TH STREET WEST RIVIERA BEACH, FLORIDA 33404
PH. (561) 863-7078 FAX (561) 863-7088
www.trainorglass.com
ILLINOIS FLORIDA GEORGIA NEW JERSEY COLORADO TEXAS ARIZONA VIRGINIA MARYLAND

REVISIONS

NO.	DATE	BY	
1	9/14/11	BCC	UPDATED MAX JOINT WIDTH
2			
3			
4			
5			
6			

DESIGN ENGINEERING & CONSULTING
2205 N. COLLINS BLVD. - SUITE 100
RICHARDSON, TEXAS 75080
PH: 972-644-4640
FAX: 972-644-4364

Date	Scale
3-3-11	HALF

Drawing No
4326435

Drawing Title
90 PSF
SMALL MISSILE IMPACT DETAILS

Sheet No
10 / 44

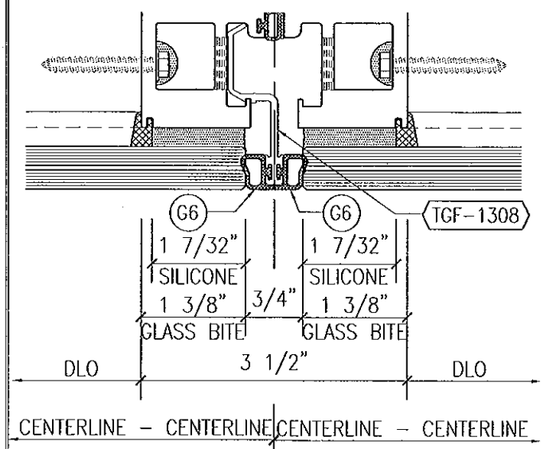

1 SSG INTERMEDIATE MULLION
w/ 1 5/16" THICK GLASS

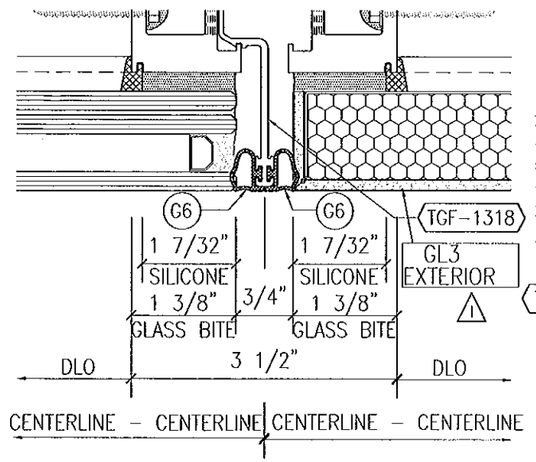

1 SSG INTERMEDIATE MULLION
w/ 1 5/16" THICK GLASS OR COMPOSITE PANEL

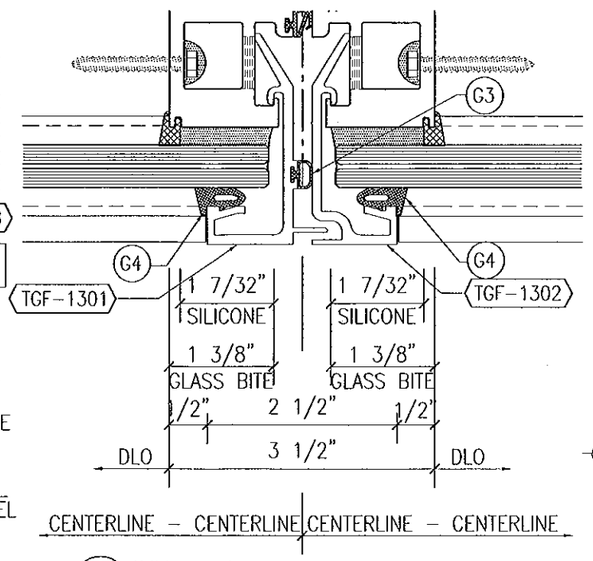

1 INTERMEDIATE MULLION
w/ 9/16" THICK GLASS & 2 1/2" FACE CAP

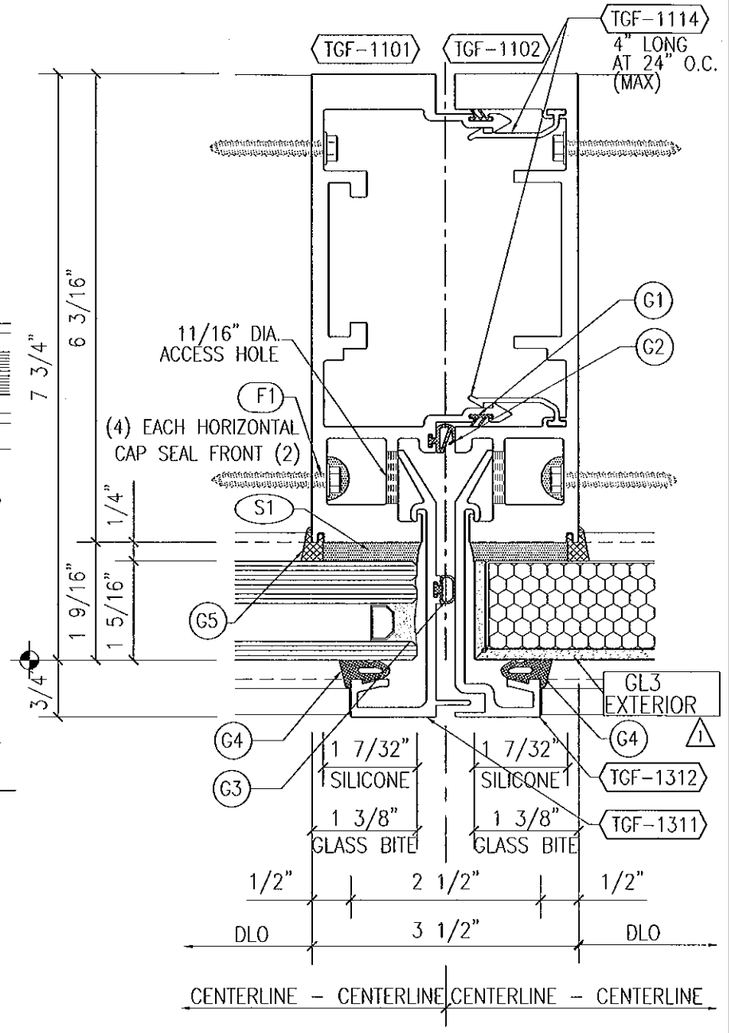

1 INTERMEDIATE MULLION
w/ 1 5/16" THICK GLASS OR COMPOSITE PANELS

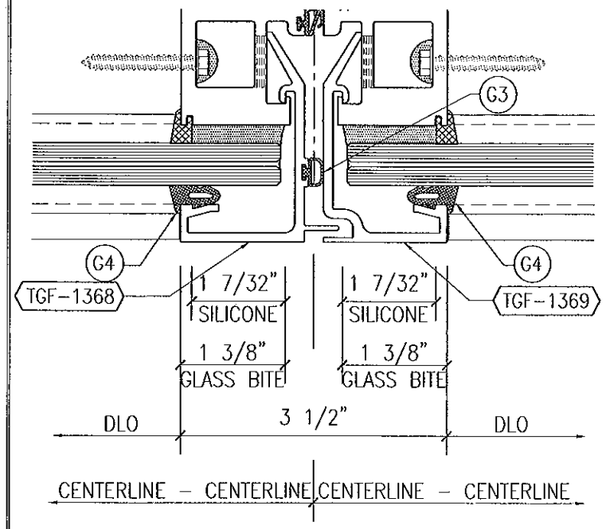

1 INTERMEDIATE MULLION
w/ 9/16" THICK GLASS & 3 1/2" FACE CAP

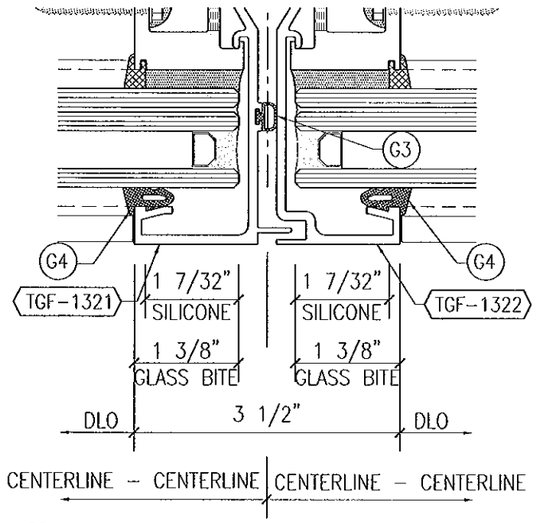

1 INTERMEDIATE MULLION
w/ 1 5/16" THICK GLASS & 3 1/2" FACE CAP

NOTE:
SEE SHEET 22 FOR ANCHORAGE CONDITIONS

FOR MIAMI-DADE CO. B.C.C.O.

Approved as complying with the Florida Building Code
Date 10/20/2011
NOA# 11-0401.03
Miami Dade Product Control
By

JEFFREY H MARSH
LICENSE
No 70018
STATE OF FLORIDA
PROFESSIONAL ENGINEER
10/4/2011

TRAINOR
GLASS COMPANY
1101 13TH STREET WEST RIVIERA BEACH, FLORIDA 33404
PH. (561) 863-7078 FAX (561) 863-7088
www.trainorglass.com
ILLINOIS FLORIDA GEORGIA NEW JERSEY COLORADO TEXAS ARIZONA VIRGINIA MARYLAND

REVISIONS

NO.	DATE	BY	
1	10/03/11	DBD	ADDED NOTE FOR GL3 EXTERIOR
2			
3			
4			
5			
6			

DESIGN ENGINEERING & CONSULTING
2500 N. COLLINS BLVD. - SUITE 100 PH: 972-644-3640
RICHARDSON, TEXAS 75080 FAX: 972-644-4324

Date	Scale
3-3-11	HALF

Drawing No
4326435

Drawing Title
90 PSF
SMALL MISSILE IMPACT DETAILS

Sheet No
11 / 44

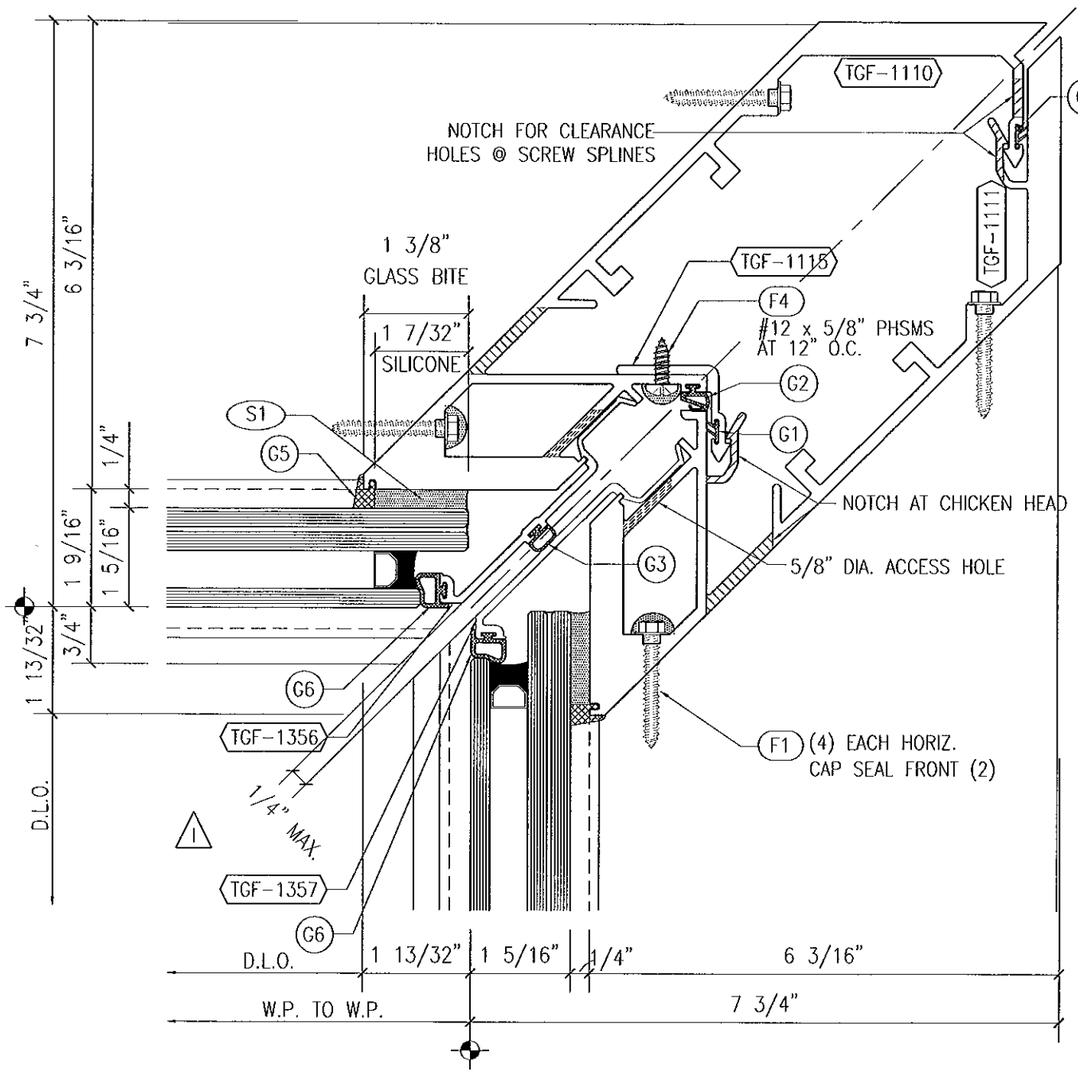

1 90 I.S. CORNER MULLION
w/ 1 5/16" THICK GLASS

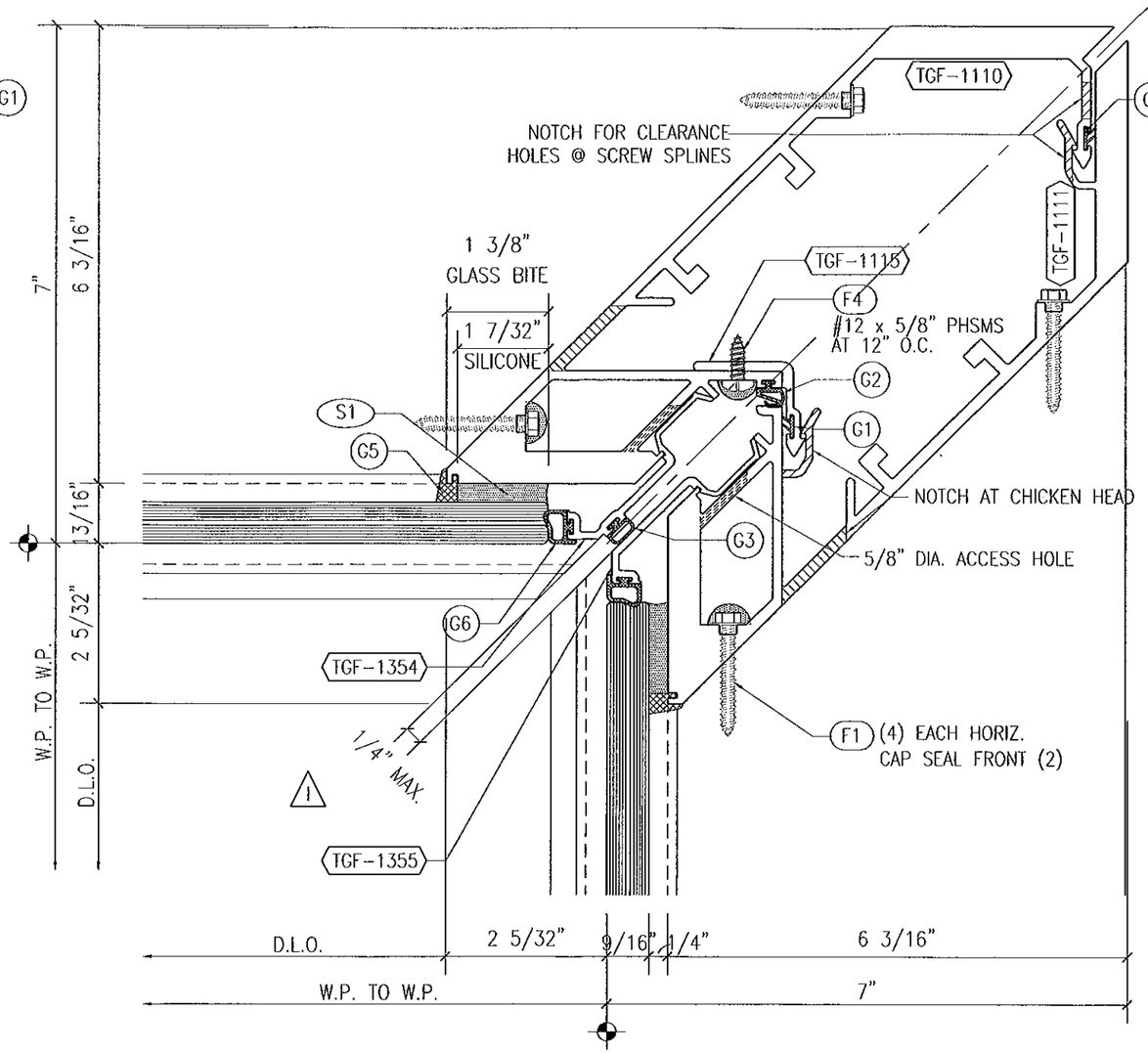

2 90 I.S. CORNER MULLION
w/ 9/16" THICK GLASS

NOTE:
SEE SHEET 23 FOR ANCHORAGE CONDITIONS

FOR MIAMI-DADE CO. B.C.C.O.

Approved as complying with the Florida Building Code
Date 10/20/2011
NOA# 11-0201.03
Miami Dade Product Control
By

JEFFREY H MARSH
LICENSE
No 70018
STATE OF FLORIDA
PROFESSIONAL ENGINEER
10/4/2011

TRAINOR GLASS COMPANY
1101 13TH STREET WEST RIVIERA BEACH, FLORIDA 33404
PH. (561) 863-7078 FAX (561) 863-7088
www.trainorglass.com
ILLINOIS FLORIDA GEORGIA NEW JERSEY COLORADO TEXAS ARIZONA VIRGINIA MARYLAND

REVISIONS

NO.	DATE	BY	
1	8/22/11	GEC	ADDED 1/4" MAX. CORNER JT DIM
2	-	-	-
3	-	-	-
4	-	-	-
5	-	-	-
6	-	-	-

DESIGN ENGINEERING & CONSULTING
2905 N. COLLINS BLVD. - SUITE 100 PH: 972-644-0840
ROCKWALL, TEXAS 75080 FAX: 972-644-0234

Date	Scale
3-3-11	HALF

Drawing No
4326435

Drawing Title
90 PSF SMALL MISSILE IMPACT DETAILS

Sheet No
12 / 44

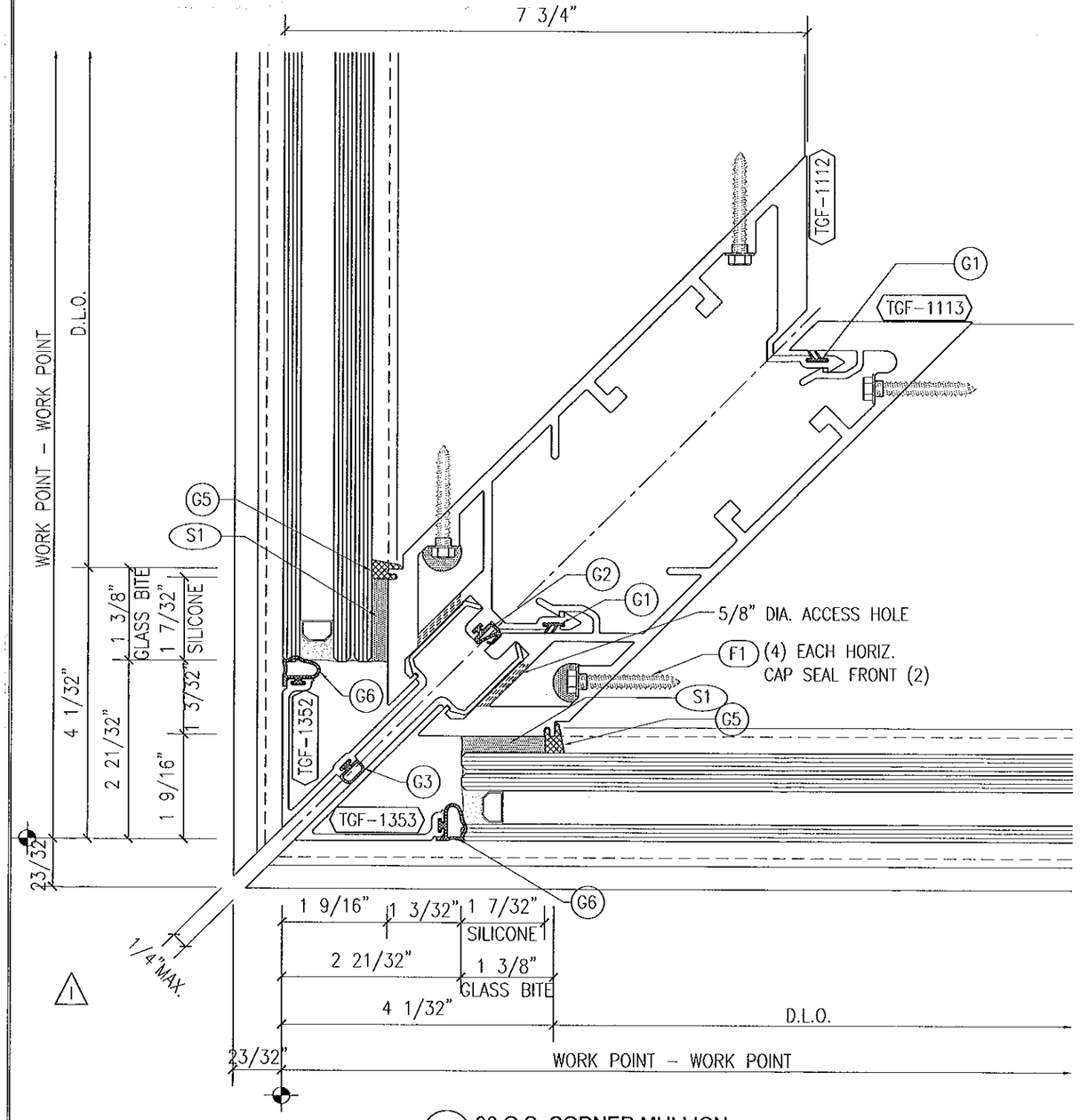

1 90 O.S. CORNER MULLION
w/ 1 5/16" THICK GLASS

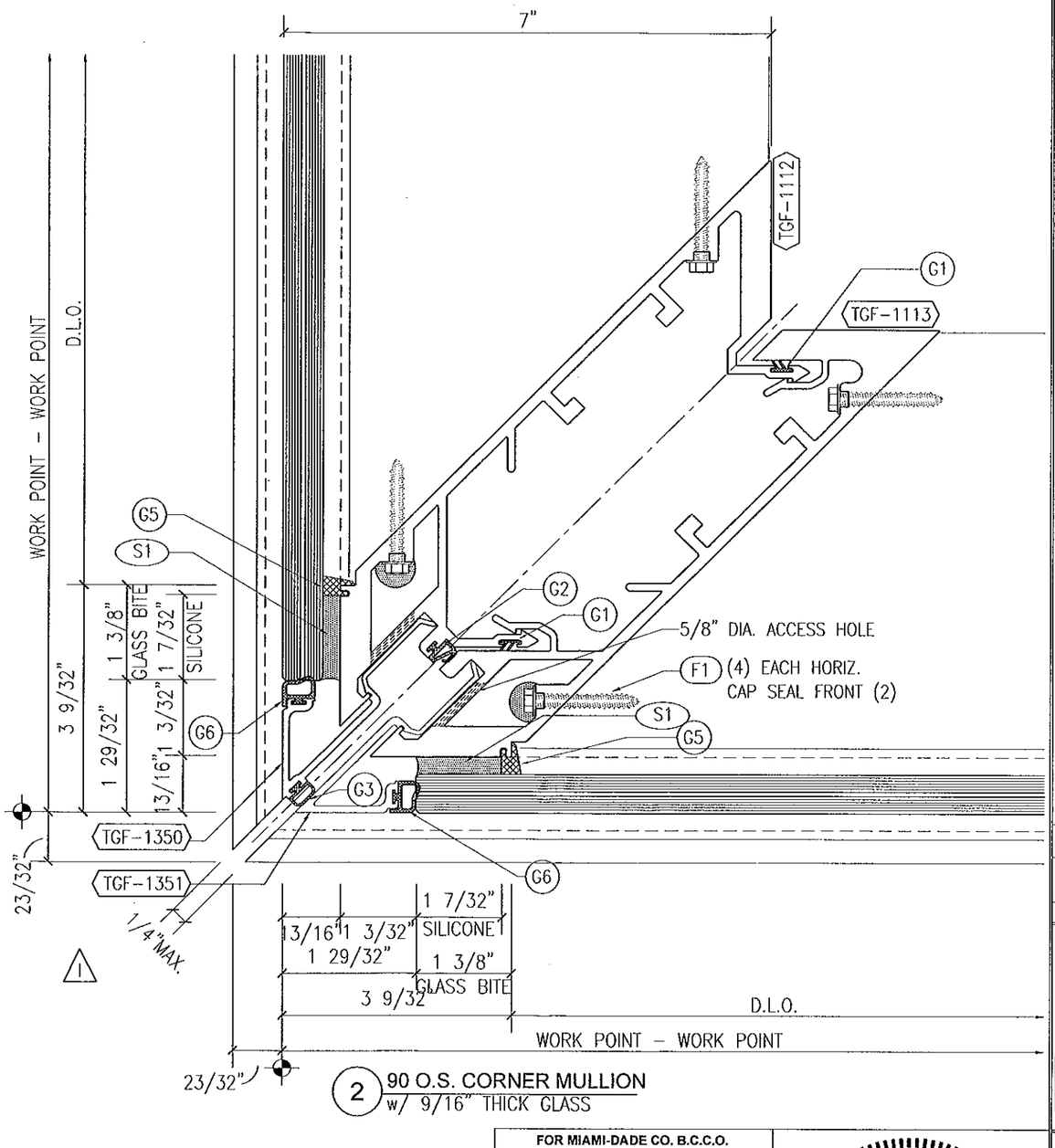

2 90 O.S. CORNER MULLION
w/ 9/16" THICK GLASS

NOTE:
SEE SHEET 24 & 25 FOR ANCHORAGE CONDITIONS

FOR MIAMI-DADE CO. B.C.C.O.

Approved as complying with the Florida Building Code
Date 10/20/2011
NOA# 11-0401.03
Miami Dade Product Control
By

JEFFREY H MARSH
LICENSE
No 70018
STATE OF FLORIDA
PROFESSIONAL ENGINEER
10/4/2011

TRAINOR
GLASS COMPANY
1101 13TH STREET WEST RIVIERA BEACH, FLORIDA 33404
PH. (561) 863-7078 FAX (561) 863-7088
www.trainorglass.com
ILLINOIS FLORIDA GEORGIA NEW JERSEY COLORADO TEXAS ARIZONA VIRGINIA MARYLAND

REVISIONS

NO.	DATE	BY	
1	6/22/11	DEC	ADDED 1/4" MAX. CORNER JT DIM
2	-	-	-
3	-	-	-
4	-	-	-
5	-	-	-
6	-	-	-

DESIGN ENGINEERING & CONSULTING
2205 N. COLLINS BLVD. - SUITE 100 PH: 972-644-4640
RICHARDSON, TEXAS 75080 FAX: 972-644-4284

Date	Scale
3-3-11	HALF

Drawing No
4326435

Drawing Title
90 PSF SMALL MISSILE IMPACT DETAILS

Sheet No
13 / 44

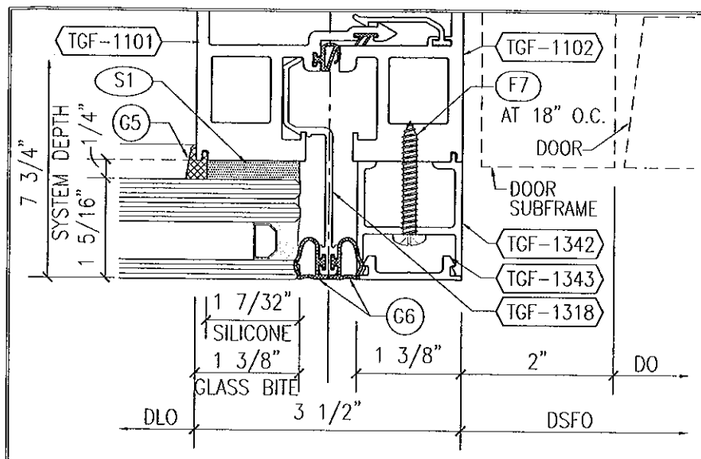

1 **SSG DOOR JAMB w/ SIDE LITE**
w/ 1 5/16" THICK GLASS

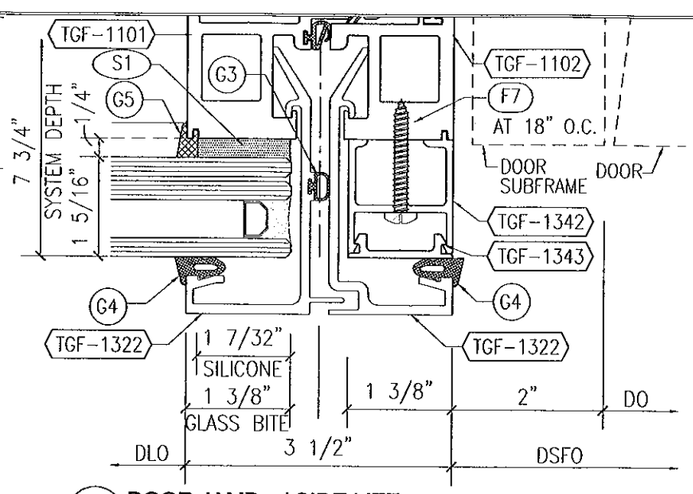

1 **DOOR JAMB w/ SIDE LITE**
w/ 1 5/16" THICK GLASS & 3 1/2" FACE CAPS

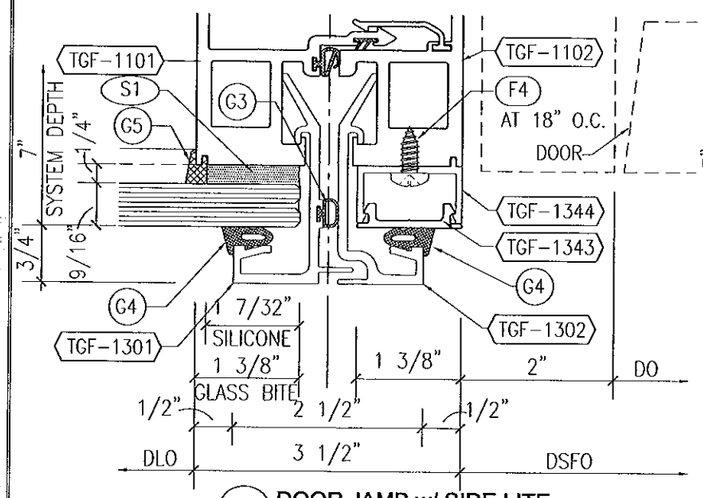

1 **DOOR JAMB w/ SIDE LITE**
w/ 9/16" THICK GLASS

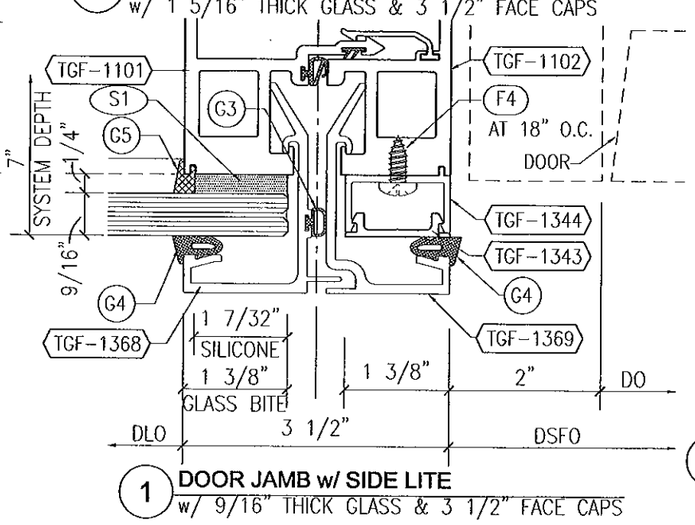

1 **DOOR JAMB w/ SIDE LITE**
w/ 9/16" THICK GLASS & 3 1/2" FACE CAPS

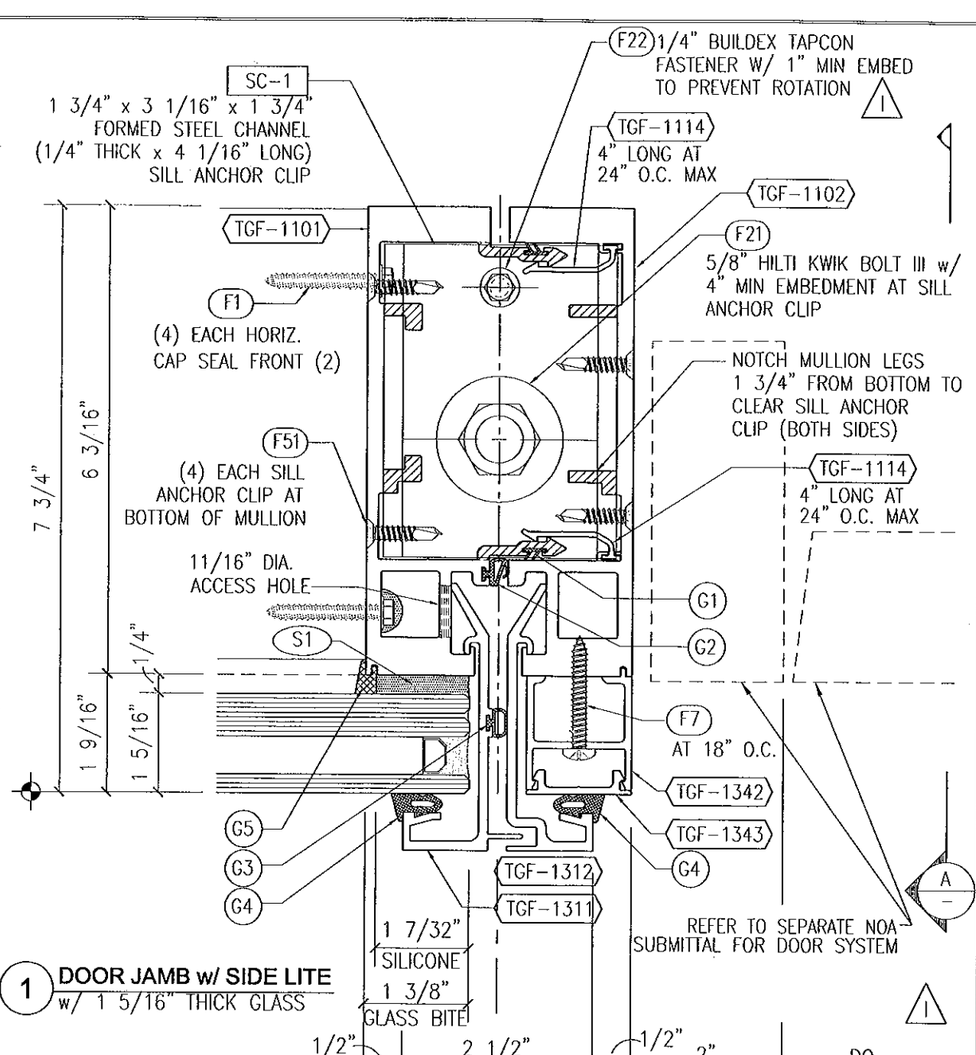

1 **DOOR JAMB w/ SIDE LITE**
w/ 1 5/16" THICK GLASS

NOTE:

STEEL REINF. REQ'D AT DOOR JAMB MULLIONS NOT SHOWN FOR CLARITY (SEE SINGLE-SPAN MULLION CHART)

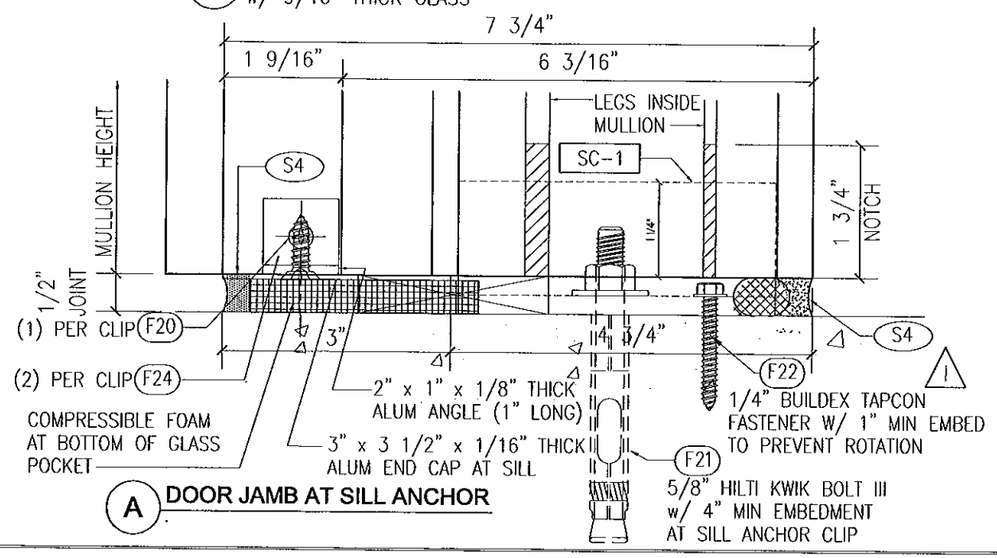

A **DOOR JAMB AT SILL ANCHOR**

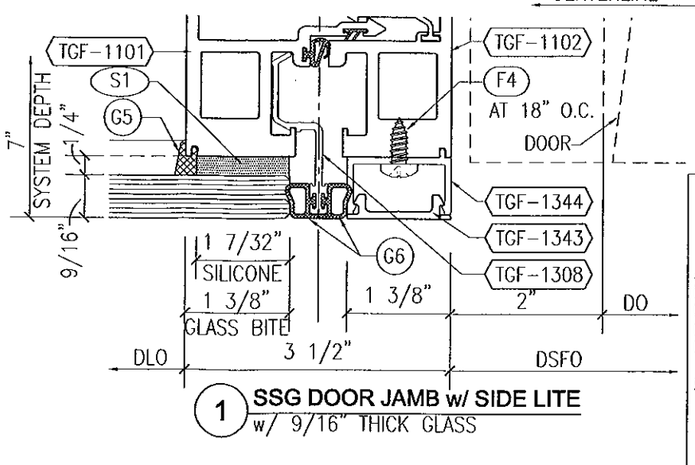

1 **SSG DOOR JAMB w/ SIDE LITE**
w/ 9/16" THICK GLASS

FOR MIAMI-DADE CO. B.C.C.O.

Approved as complying with the
Florida Building Code
Date 10/20/2011
NOA# 11.04.01.03
Miami Dade Product Control
By

JEFFREY H MARSH
LICENSE
No 70018
STATE OF
FLORIDA
PROFESSIONAL ENGINEER
10/4/2011

GLASS COMPANY
1101 13TH STREET WEST RIVIERA BEACH, FLORIDA 33404
PH. (561) 863-7078 FAX (561) 863-7088
www.trainorglass.com
TRAINOR
ILLINOIS FLORIDA GEORGIA NEW JERSEY COLORADO TEXAS ARIZONA VIRGINIA MARYLAND

REVISIONS

NO.	DATE	BY	DESC
1	4/22/11		UPDATED NOTE FOR SEPARATE NOA FOR DOOR SYSTEM AND 1/4" TAPCON ANCHOR INFORMATION

DESIGN ENGINEERING & CONSULTING Inc.
PH. 972-644-4040
FAX 972-644-4324
2308 N. GARLAND AVE. - SUITE 109
GARLAND, TEXAS 75040

Date	Scale
3-3-11	HALF

Drawing No
4326435

Drawing Title
90 PSF
SMALL MISSILE IMPACT
DETAILS

Sheet No
14 / 44

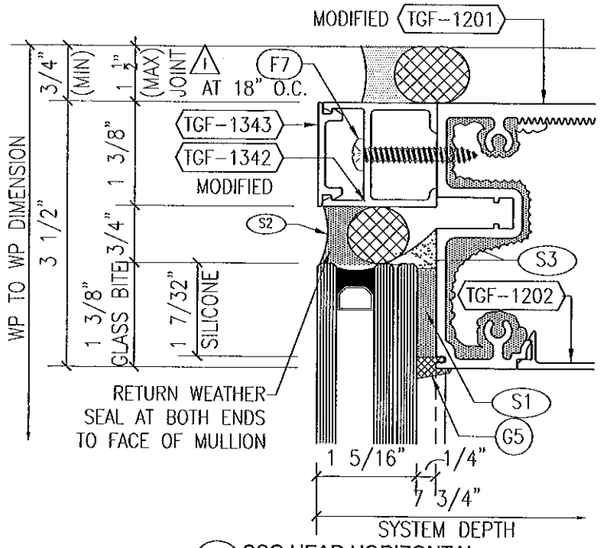

1 SSG HEAD HORIZONTAL
w/ 1 5/16" THICK GLASS

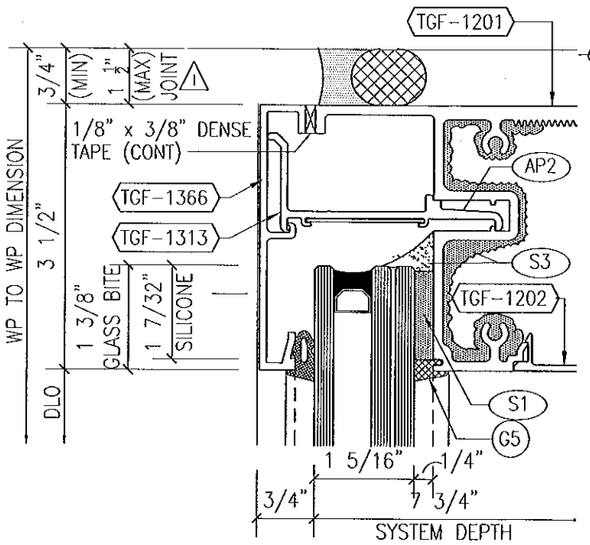

1 HEAD HORIZONTAL
w/ 1 5/16" THICK GLASS & 3 1/2" FACE CAP

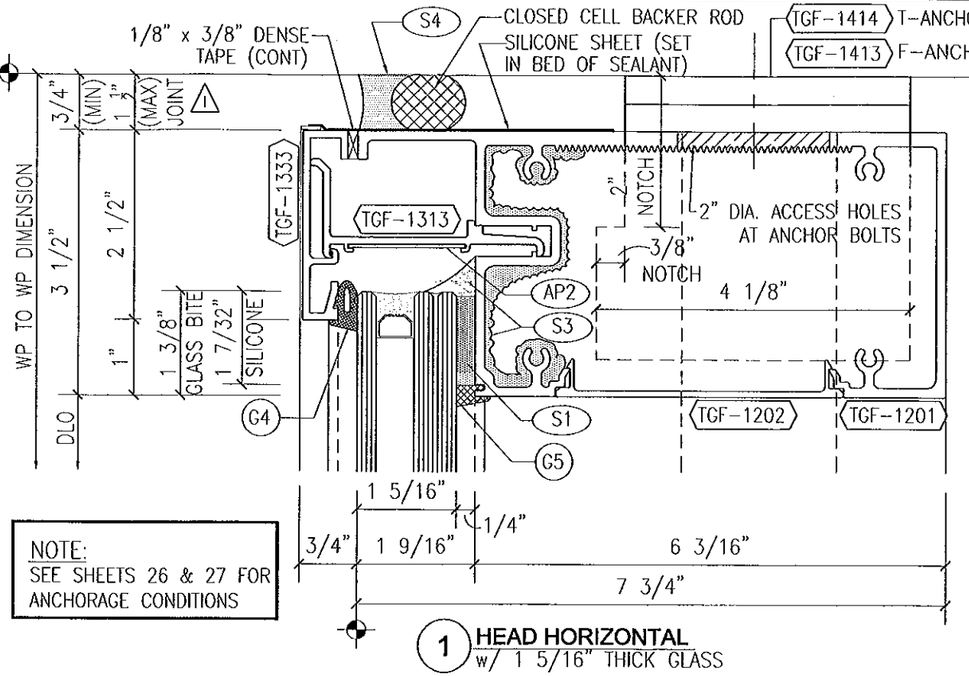

1 HEAD HORIZONTAL
w/ 1 5/16" THICK GLASS

NOTE:
SEE SHEETS 26 & 27 FOR ANCHORAGE CONDITIONS

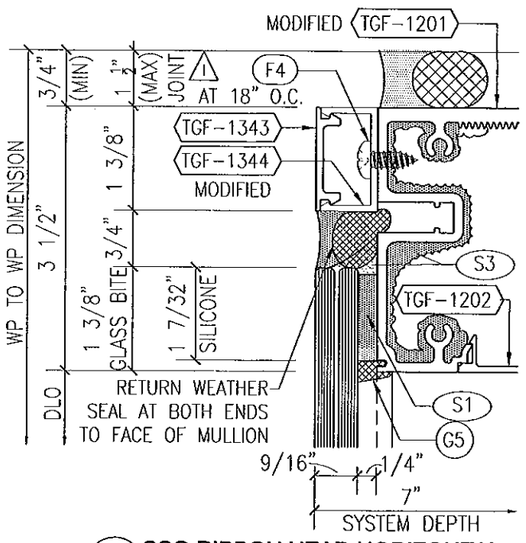

1 SSG RIBBON HEAD HORIZONTAL
w/ 9/16" THICK GLASS

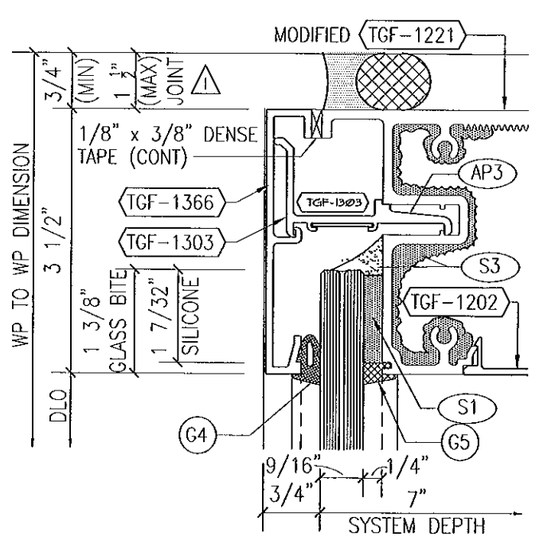

1 HEAD HORIZONTAL
w/ 9/16" THICK GLASS & 3 1/2" FACE CAP

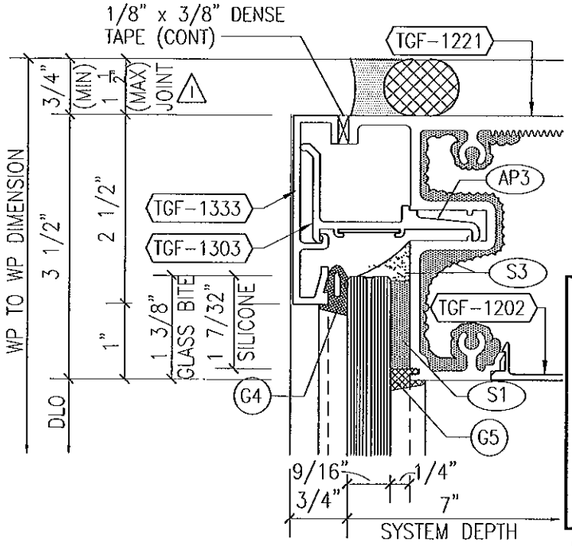

1 HEAD HORIZONTAL
w/ 9/16" THICK GLASS

PERIMETER SEALANT OPTIONS

DOW CORNING 790 SILICONE
DOW CORNING 791 SILICONE
DOW CORNING 795 SILICONE
TREMCO SPECTRUM 2

ALTERNATE PERIMETER SEALANT TYPES AND JOINT SIZES SHALL BE DESIGNED AND APPROVED BY DESIGN PROFESSIONAL OF RECORD AND/OR THE SEALANT MANUFACTURER.

FOR MIAMI-DADE CO. B.C.C.O.

Approved as complying with the Florida Building Code
Date 10/20/2011
NOA# 11-0401.03
Miami Dade Product Control
By

JEFFREY H MARSH
LICENSE
No 70018
STATE OF
FLORIDA
PROFESSIONAL ENGINEER
10/4/2011

GLASS COMPANY
1101 13TH STREET WEST RIVIERA BEACH, FLORIDA 33404
PH. (561) 863-7078 FAX (561) 863-7088
www.trainorglass.com
TRAINOR
ILLINOIS FLORIDA GEORGIA NEW JERSEY COLORADO TEXAS ARIZONA VIRGINIA MARYLAND

REVISIONS

NO.	DATE	BY	
1	10/04/11	GC	ADDED MIC JOINT WIDTH

DESIGN ENGINEERING & CONSULTING Inc.
3205 N. COURSE DRIVE, SUITE 104 PEARLAND, TEXAS 77584
PH: 972-344-4044 FAX: 972-344-4084

Date	Scale
3-3-11	HALF

Drawing No
4326435

Drawing Title
90 PSF SMALL MISSILE IMPACT DETAILS

Sheet No
15 / 44

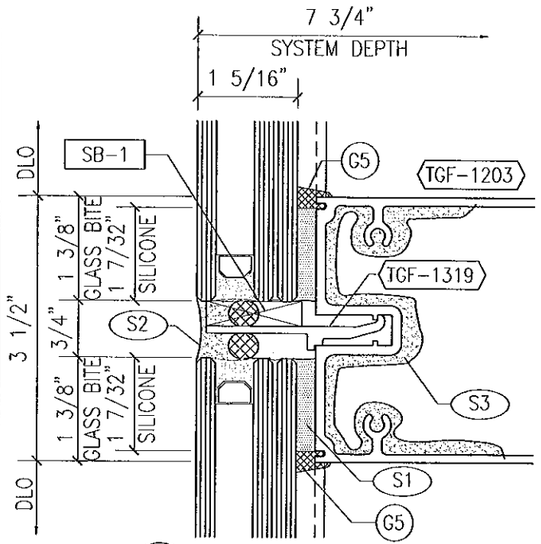

1 SSG INT HORIZONTAL
w/ 1 5/16" THICK GLASS

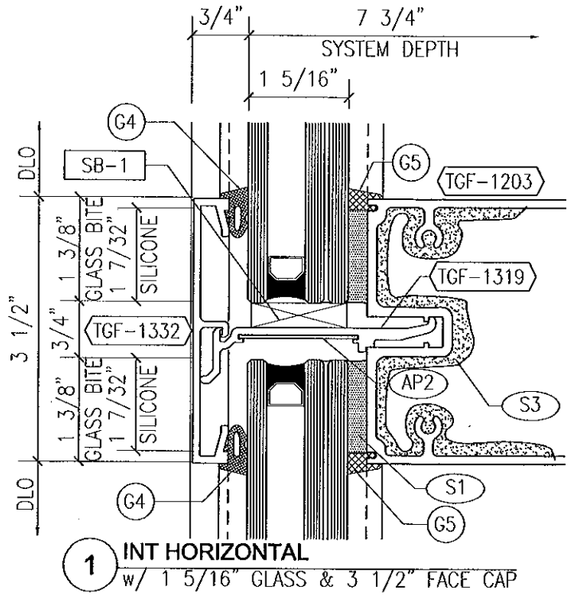

1 INT HORIZONTAL
w/ 1 5/16" GLASS & 3 1/2" FACE CAP

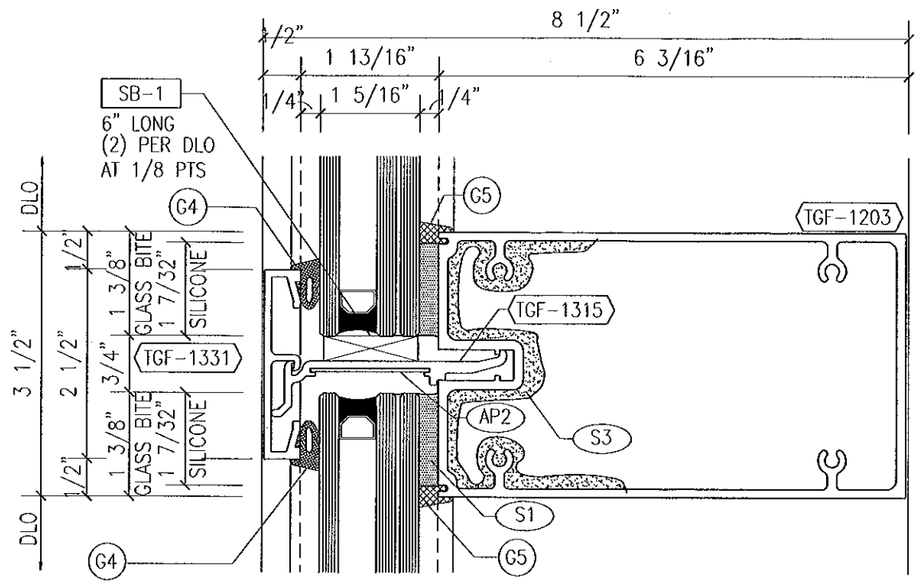

BUTT INTO VERT. GASKET
BUNCH @ CENTER OF DLO
SO GASKET IS ON COMP.

1 INTERMEDIATE HORIZONTAL
w/ 1 5/16" GLASS

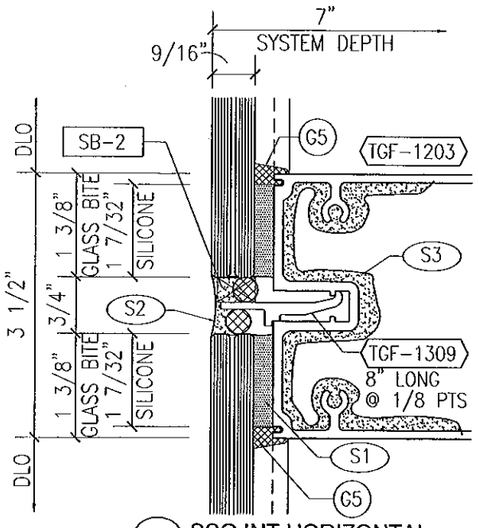

1 SSG INT HORIZONTAL
w/ 9/16" THICK GLASS

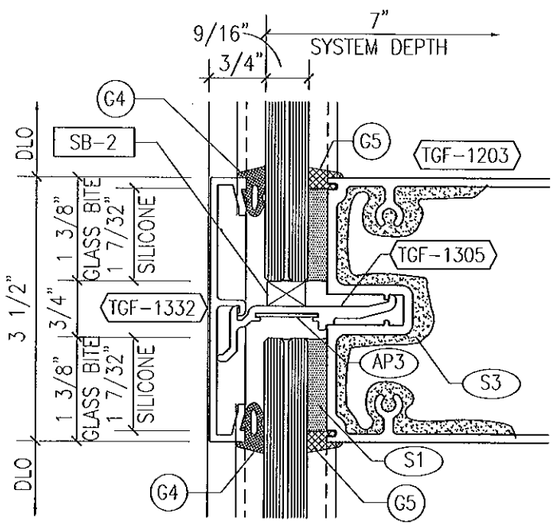

1 INT HORIZONTAL
w/ 9/16" GLASS & 3 1/2" FACE CAP

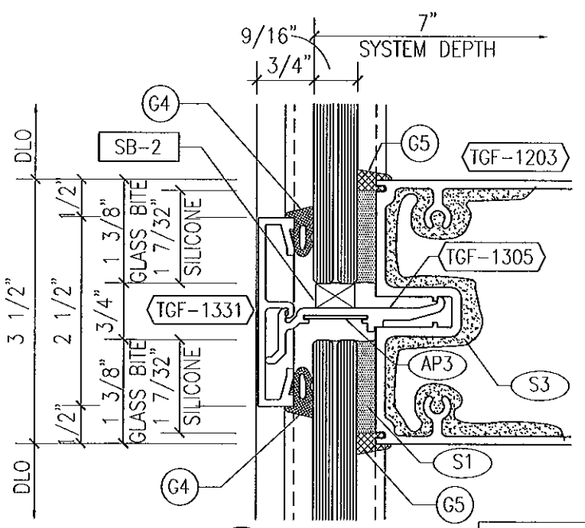

1 INT HORIZONTAL
w/ 9/16" GLASS

FOR MIAMI-DADE CO. B.C.C.O.

Approved as complying with the
Florida Building Code
Date 10/20/2011
NOA# 11-0401.03
Miami Dade Product Control
By

JEFFREY H MARSH
LICENSE
No 70018
STATE OF
FLORIDA
PROFESSIONAL ENGINEER
10/4/2011

GLASS COMPANY
1101 13TH STREET WEST RIVIERA BEACH, FLORIDA 33404
PH. (561) 863-7078 FAX (561) 863-7088
www.trainorglass.com
TRAINOR
ILLINOIS FLORIDA GEORGIA NEW JERSEY COLORADO TEXAS ARIZONA VIRGINIA MARYLAND

REVISIONS

NO.	DATE	BY
1		
2		
3		
4		
5		
6		

DESIGN ENGINEERING & CONSULTING
2905 N. COLLINS BLVD. • SUITE 100 PH: 972-644-0649
RICHARDSON, TEXAS 75080 FAX: 972-644-0224

Date	Scale
3-3-11	HALF

Drawing No
4326435

Drawing Title
90 PSF
SMALL MISSILE IMPACT
DETAILS

Sheet No
16 / 44

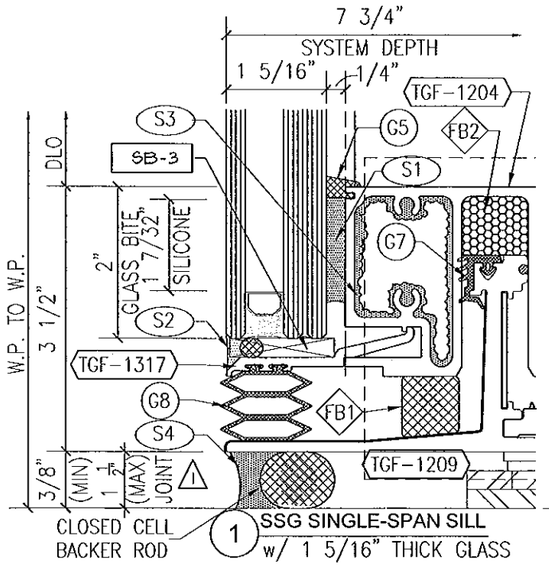

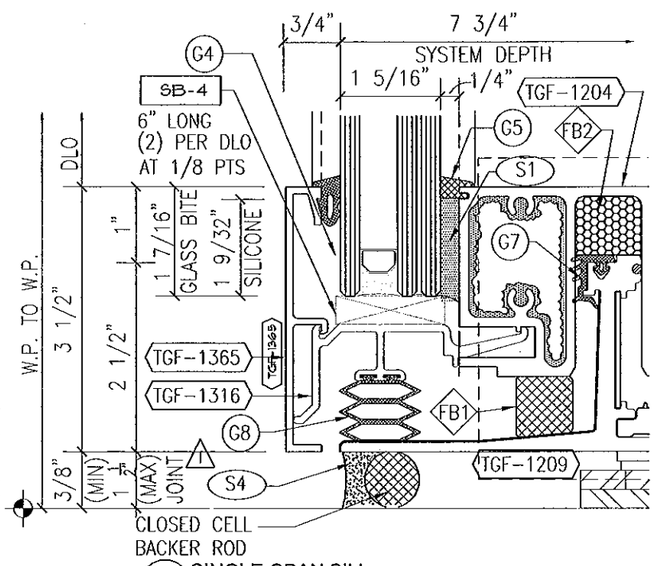

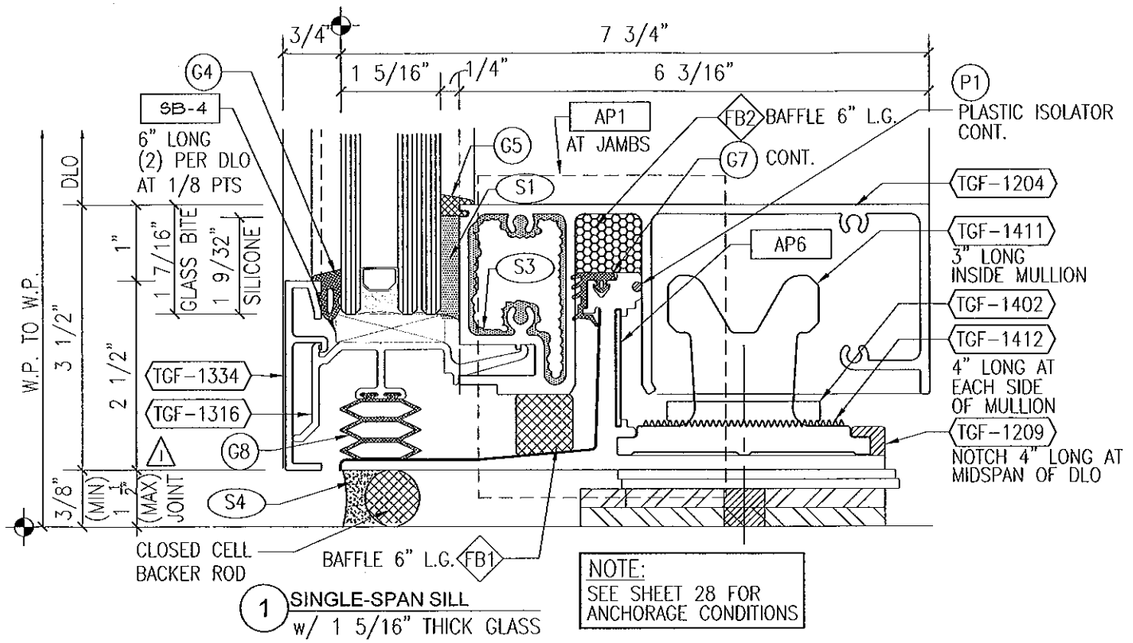

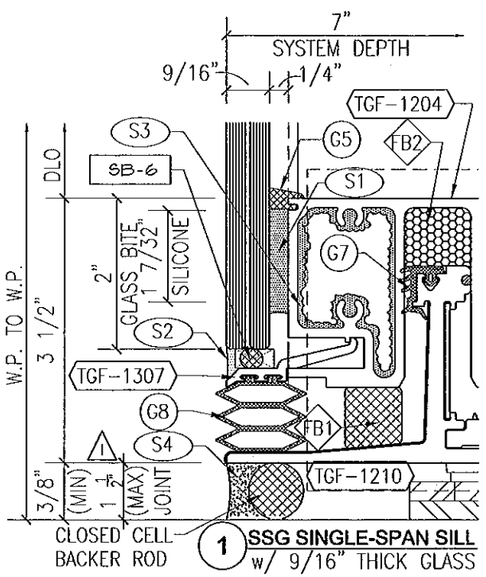

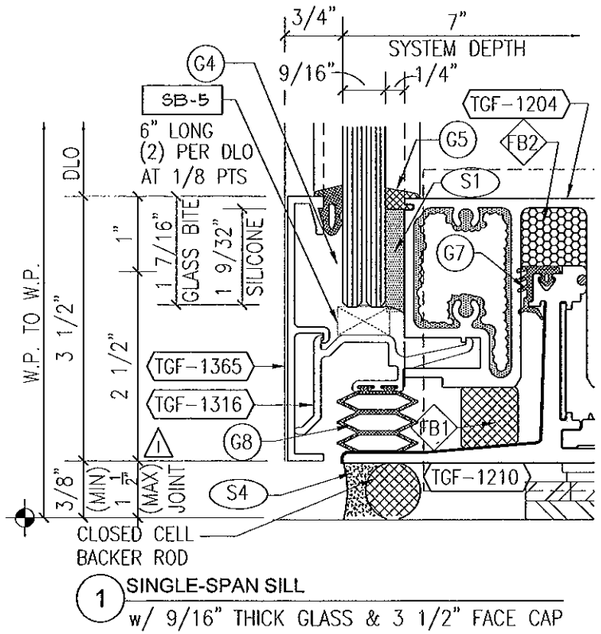

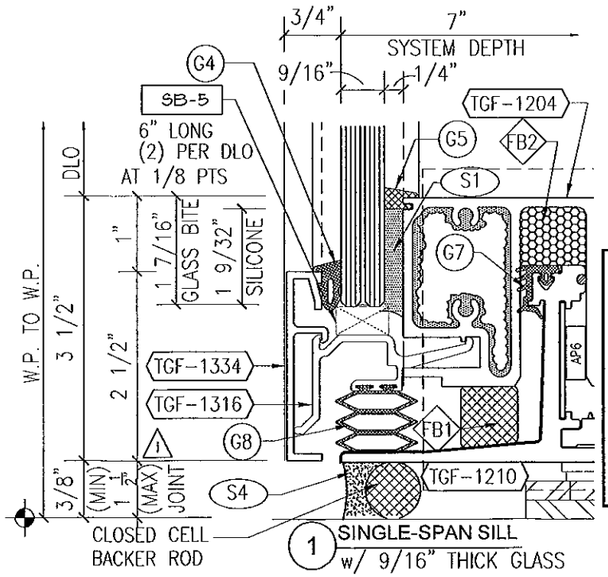

PERIMETER SEALANT OPTIONS

DOW CORNING 790 SILICONE
DOW CORNING 791 SILICONE
DOW CORNING 795 SILICONE
TREMCO SPECTRUM 2

ALTERNATE PERIMETER SEALANT TYPES AND JOINT SIZES SHALL BE DESIGNED AND APPROVED BY DESIGN PROFESSIONAL OF RECORD AND/OR THE SEALANT MANUFACTURER.

FOR MIAMI-DADE CO. B.C.C.O.

Approved as complying with the Florida Building Code
Date 10/20/2011
NOA# 11-0401.03
Miami-Dade Product Control
By

JEFFREY H MARSH
LICENSE
No 70018
STATE OF
FLORIDA
PROFESSIONAL ENGINEER
10/4/2011

GLASS COMPANY
1101 13TH STREET WEST RIVIERA BEACH, FLORIDA 33404
PH. (561) 863-7078 FAX (561) 863-7088
www.trainorglass.com
TRAINOR
ILLINOIS FLORIDA GEORGIA NEW JERSEY COLORADO TEXAS ARIZONA VIRGINIA MARYLAND

REVISIONS

NO.	DATE	BY	
1	10/04/11	CBD	REVISED MAT JOINT WIDTH

DESIGN ENGINEERING & CONSULTING Inc.
2200 N. COLLINS BLVD., SUITE 100 RICHARDSON, TEXAS 75080
PH: 972-644-2640 FAX: 972-644-2644

Date	Scale
3-3-11	HALF

Drawing No
4326435

Drawing Title
90 PSF
SMALL MISSILE IMPACT
DETAILS

Sheet No
17 / 44

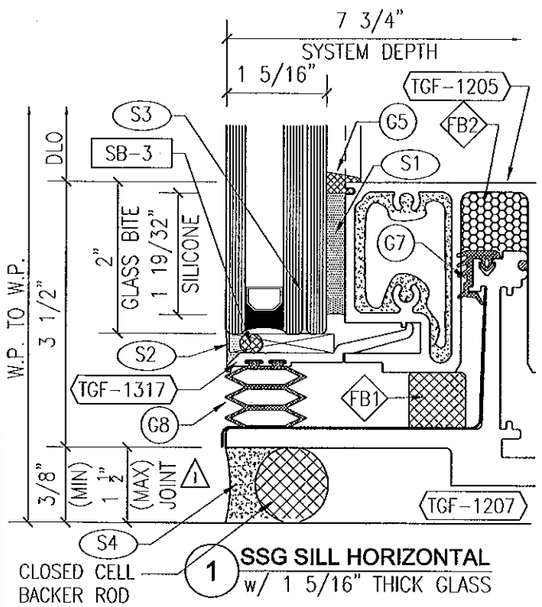

1 **SSG SILL HORIZONTAL**
w/ 1 5/16" THICK GLASS

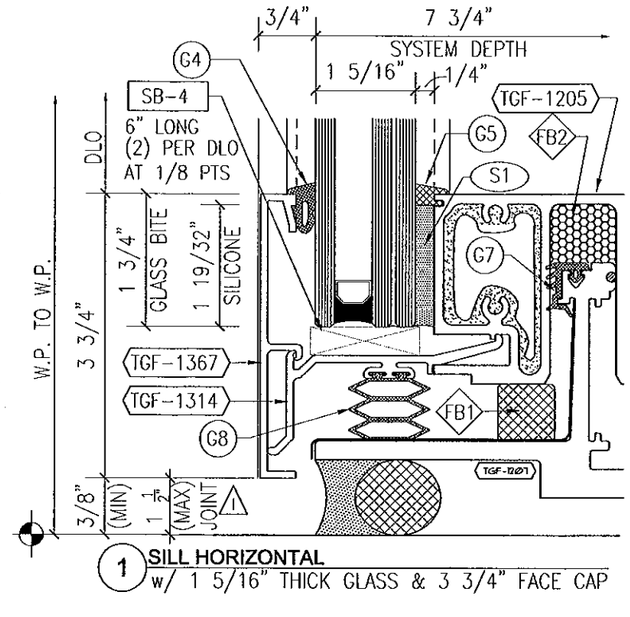

1 **SILL HORIZONTAL**
w/ 1 5/16" THICK GLASS & 3 3/4" FACE CAP

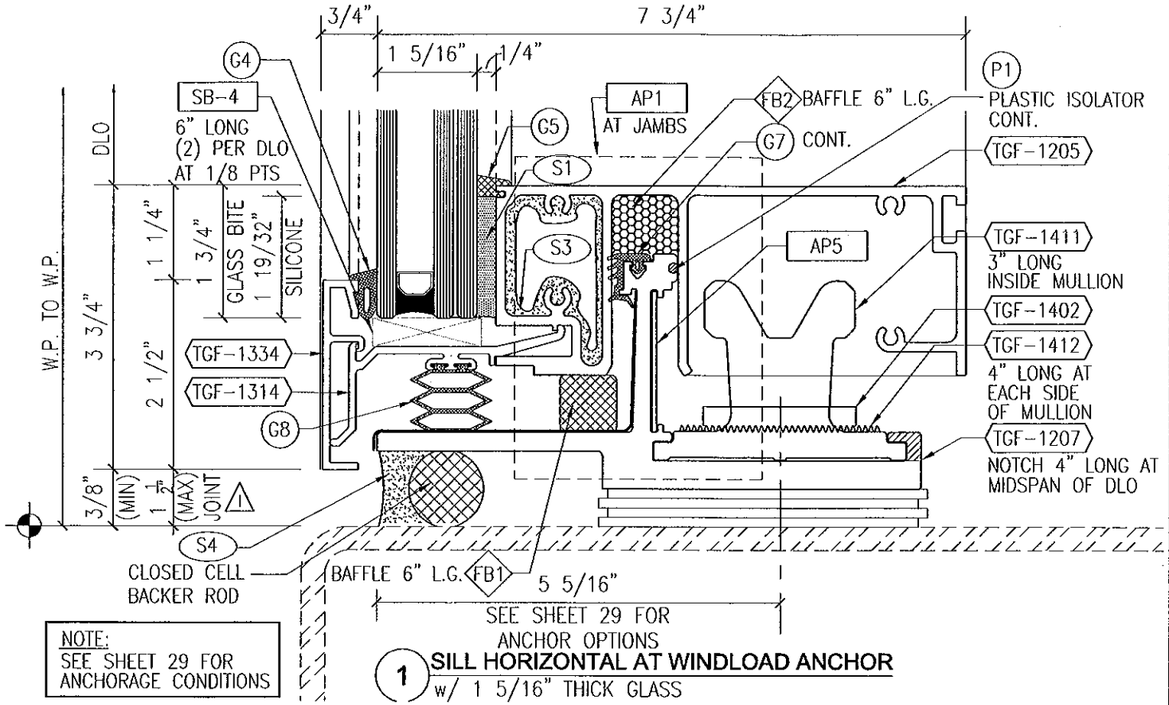

1 **SILL HORIZONTAL AT WINDLOAD ANCHOR**
w/ 1 5/16" THICK GLASS

NOTE:
SEE SHEET 29 FOR ANCHORAGE CONDITIONS

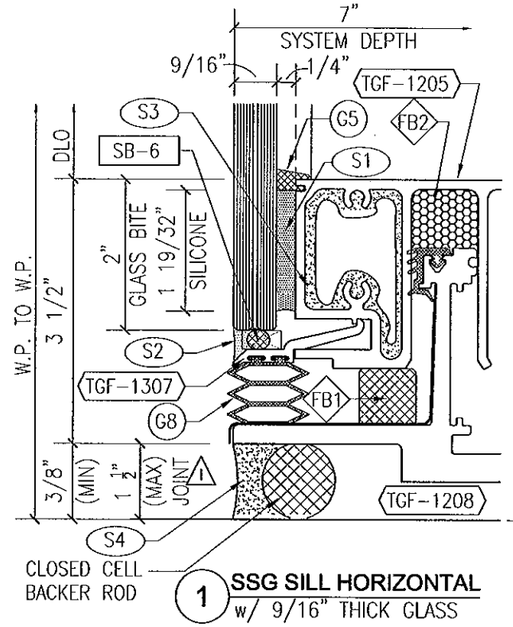

1 **SSG SILL HORIZONTAL**
w/ 9/16" THICK GLASS

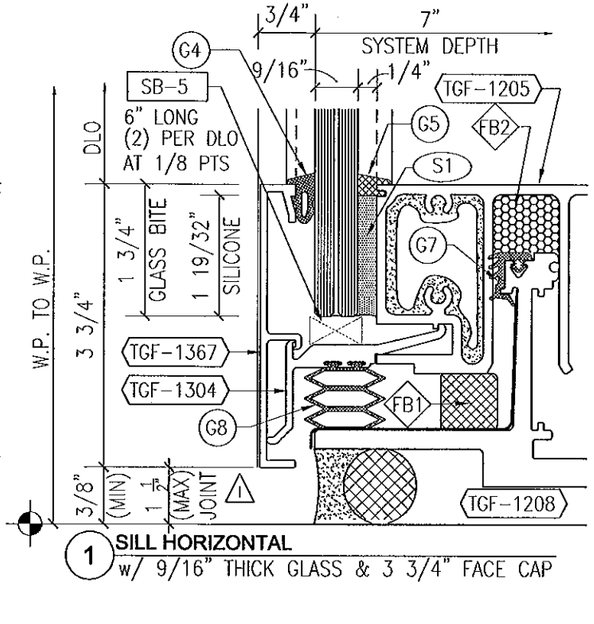

1 **SILL HORIZONTAL**
w/ 9/16" THICK GLASS & 3 3/4" FACE CAP

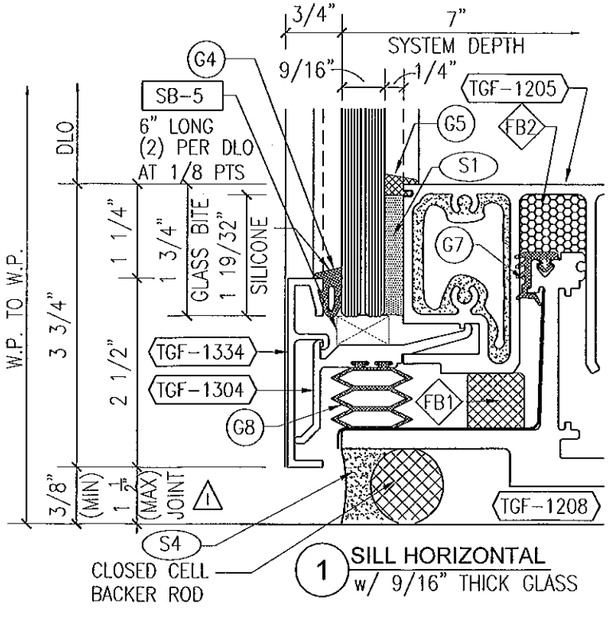

1 **SILL HORIZONTAL**
w/ 9/16" THICK GLASS

PERIMETER SEALANT OPTIONS

DOW CORNING 790	SILICONE
DOW CORNING 791	SILICONE
DOW CORNING 795	SILICONE
TREMCO SPECTRUM 2	

ALTERNATE PERIMETER SEALANT TYPES AND JOINT SIZES SHALL BE DESIGNED AND APPROVED BY DESIGN PROFESSIONAL OF RECORD AND/OR THE SEALANT MANUFACTURER.

FOR MIAMI-DADE CO. B.C.C.O.

Approved as complying with the Florida Building Code
Date 10/20/2011
NOA# 11-0901.03
Miami Dade Product Control
By

JEFFREY H MARSH
LICENSE
No 70018
STATE OF FLORIDA
PROFESSIONAL ENGINEER
10/4/2011

GLASS COMPANY
1101 13TH STREET WEST RIVIERA BEACH, FLORIDA 33404
PH. (561) 863-7078 FAX (561) 863-7088
www.trainorglass.com
TRAINOR
ILLINOIS FLORIDA GEORGIA NEW JERSEY COLORADO TEXAS ARIZONA VIRGINIA MARYLAND

REVISIONS

NO.	DATE	BY	
1	10/4/11	GG	ADDED MAX JOINT WIDTH

DESIGN ENGINEERING & CONSULTING Inc.
3907 N. COLLINS BLVD. - STE. 100 ARLINGTON, TEXAS 76005
PH: 972-444-3943 FAX: 972-444-4024

Date	Scale
3-3-11	HALF

Drawing No
4326435

Drawing Title
90 PSF SMALL MISSILE IMPACT DETAILS

Sheet No
18 / 44

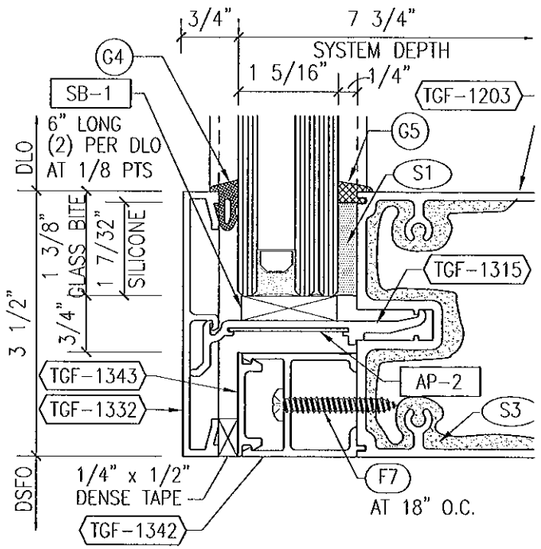

1 DOOR HEAD w/ TRANSOM
w/ 1 5/16" GLASS & 3 1/2" FACE CAP

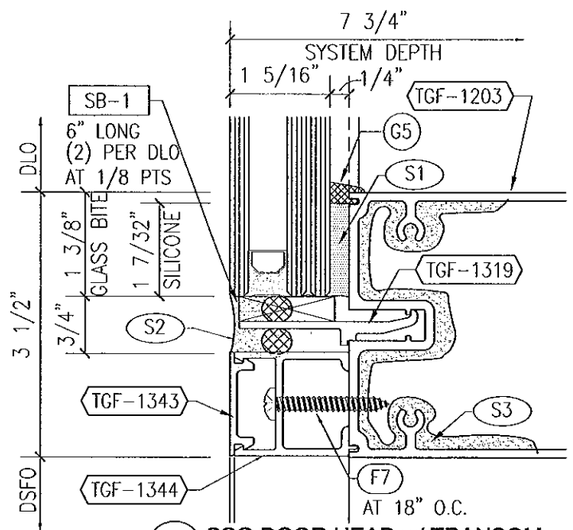

1 SSG DOOR HEAD w/ TRANSOM
w/ 1 5/16" THICK GLASS

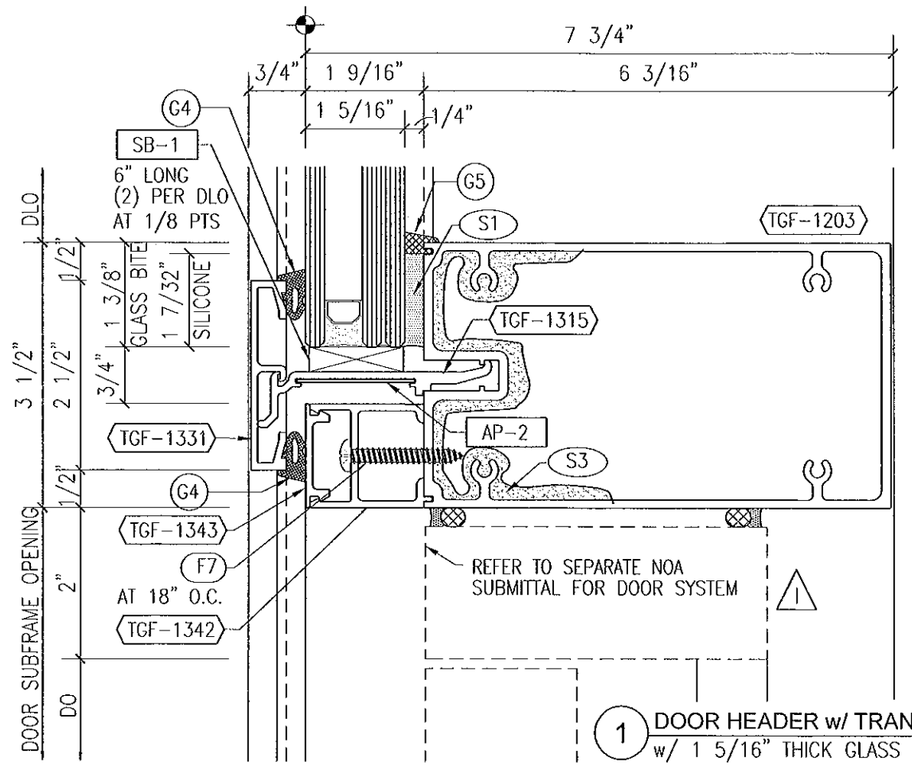

1 DOOR HEADER w/ TRANSOM LITE
w/ 1 5/16" THICK GLASS

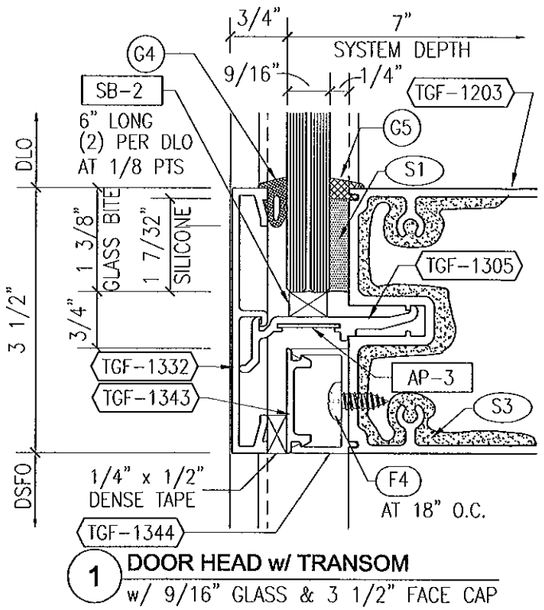

1 DOOR HEAD w/ TRANSOM
w/ 9/16" GLASS & 3 1/2" FACE CAP

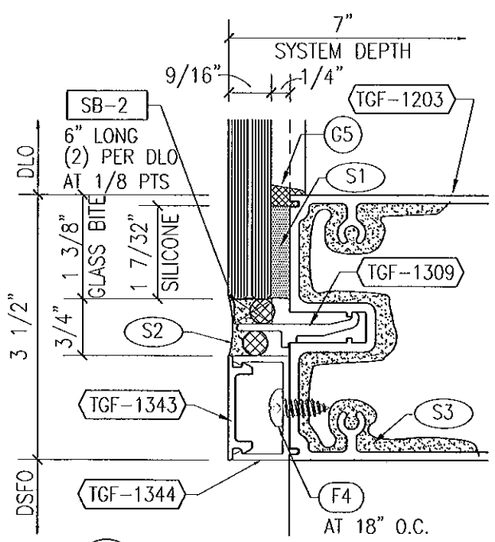

1 SSG DOOR HEAD w/ TRANSOM
w/ 9/16" THICK GLASS

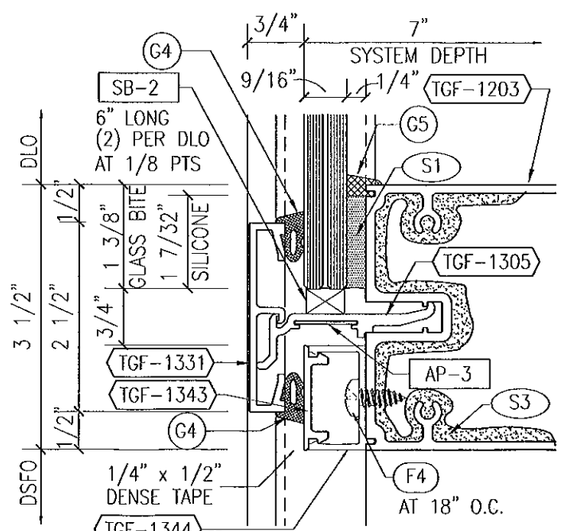

1 DOOR HEAD w/ TRANSOM
w/ 9/16" GLASS

FOR MIAMI-DADE CO. B.C.C.O.

Approved as complying with the Florida Building Code
Date 10/20/2011
NOA# 11-0401.03
Miami-Dade Product Control
By

JEFFREY H MARSH
LICENSE
No 70018
STATE OF FLORIDA
PROFESSIONAL ENGINEER
10/4/2011

TRAINOR
GLASS COMPANY
1101 13TH STREET WEST RIVIERA BEACH, FLORIDA 33404
PH. (561) 863-7078 FAX (561) 863-7088
www.trainorglass.com
ILLINOIS FLORIDA GEORGIA NEW JERSEY COLORADO TEXAS ARIZONA VIRGINIA MARYLAND

REVISIONS

NO.	DATE	BY	
1	8/22/11	BD	UPDATED NOTE FOR SEPARATE NOA SUBMITTAL FOR DOOR SYSTEM
2			
3			
4			
5			
6			

DESIGN ENGINEERING & CONSULTING
2905 N. COLLINS BLVD. - SUITE 100 PH: 972-444-0640
RICHARDSON, TEXAS 75080 FAX: 972-444-0264

Date	Scale
3-3-11	HALF

Drawing No
4326435

Drawing Title
90 PSF
SMALL MISSILE IMPACT DETAILS

Sheet No
19 / 44

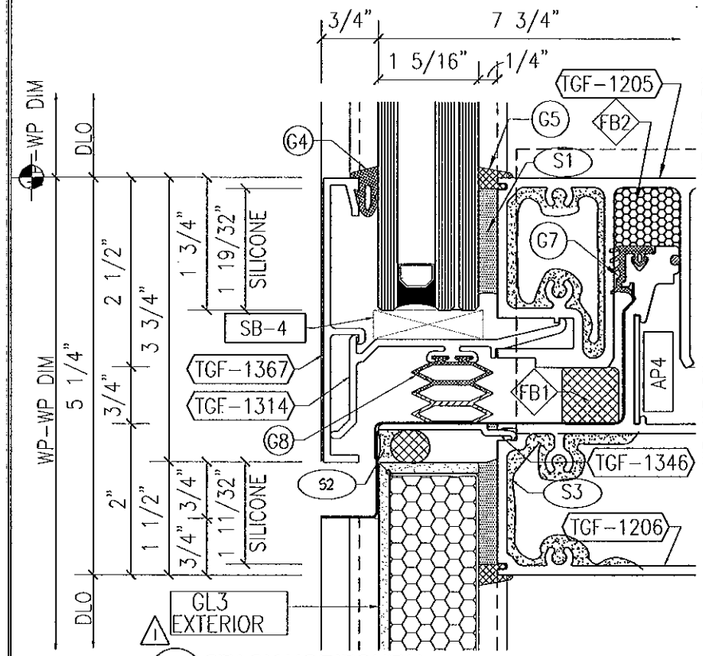

1 STACK HORIZONTAL
w/ 1 5/16" GLAZING & 3 3/4" FACE CAP

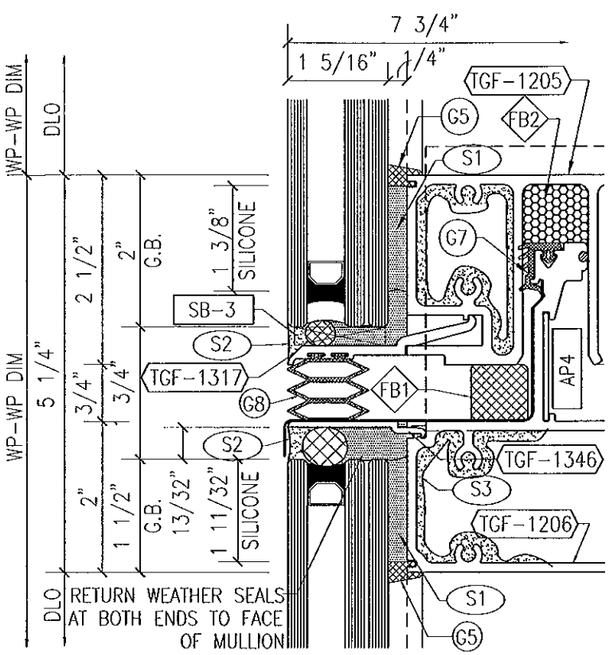

1 SSG STACK HORIZONTAL
w/ 1 5/16" GLAZING

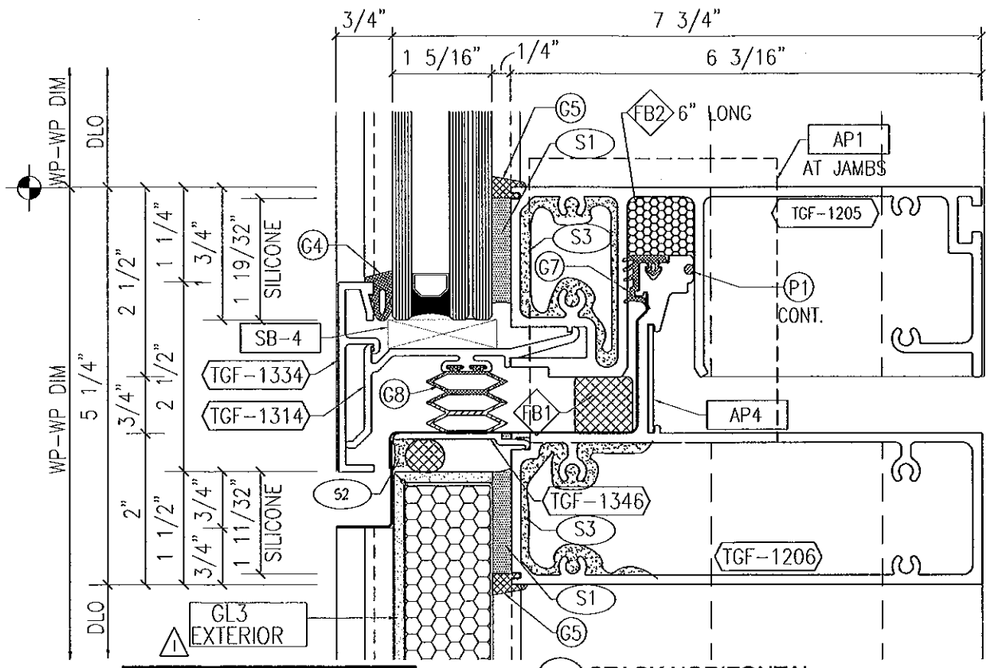

1 STACK HORIZONTAL
w/ 1 5/16" GLAZING

NOTE:
SEE SHEETS 21 THRU 25 FOR MIDSPAN ANCHORAGE CONDITIONS (BENEATH STACK)

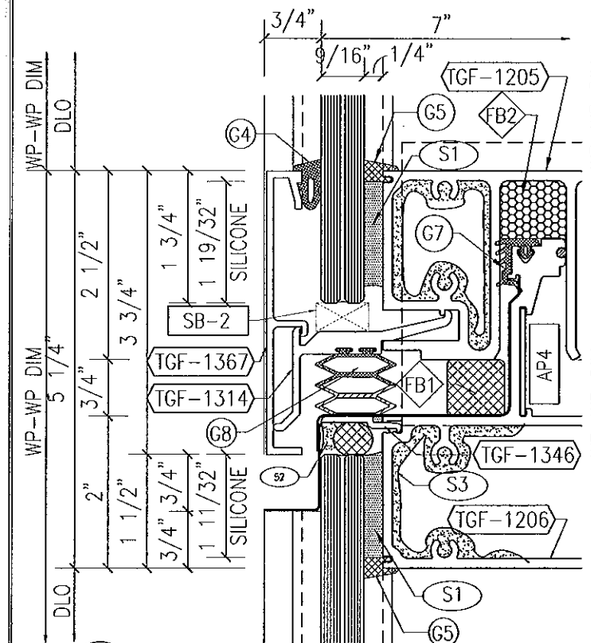

1 STACK HORIZONTAL
w/ 9/16" GLAZING & 3 3/4" FACE CAP

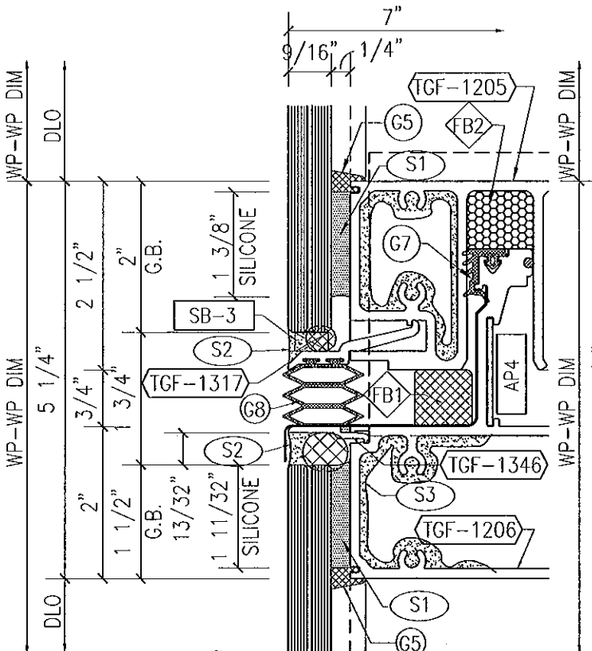

1 SSG STACK HORIZONTAL
w/ 9/16" GLAZING

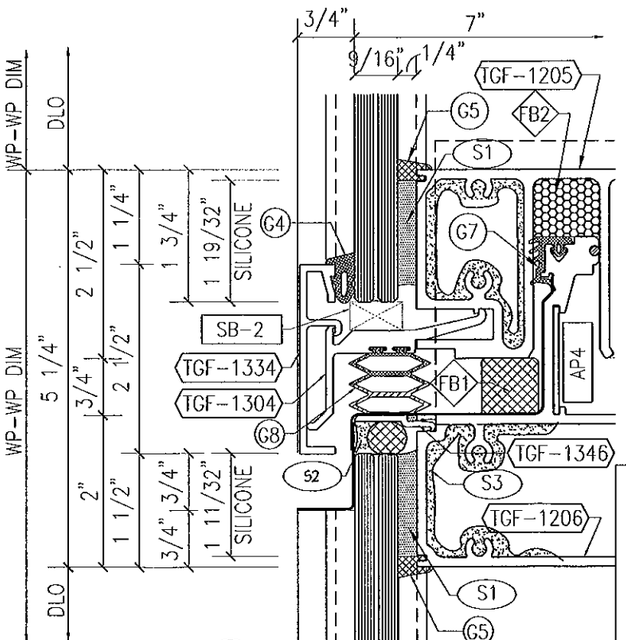

1 STACK HORIZONTAL
w/ 9/16" GLAZING

FOR MIAMI-DADE CO. B.C.C.O.

Approved as complying with the Florida Building Code
Date 10/20/2011
NOA# 11-0401.03
Miami Dade Product Control
By

JEFFREY H MARSH
LICENSE
No 70018
STATE OF FLORIDA
PROFESSIONAL ENGINEER
10/4/2011

GLASS COMPANY
1101 13TH STREET WEST RIVIERA BEACH, FLORIDA 33404
PH. (561) 863-7078 FAX (561) 863-7088
www.trainorglass.com
TRAINOR
ILLINOIS FLORIDA GEORGIA NEW JERSEY COLORADO TEXAS ARIZONA VIRGINIA MARYLAND

REVISIONS

NO.	DATE	BY	
1	10/03/11	DEC	ADDED NOTE FOR GL3 EXTERIOR
2			
3			
4			
5			
6			

DESIGN ENGINEERING & CONSULTING
2205 N. COLLINS BLVD. - SUITE 100 RICHARDSON, TEXAS 75080
PH: 972-644-2640 FAX: 972-644-2234

Date	Scale
3-3-11	HALF

Drawing No
4326435

Drawing Title
90 PSF SMALL MISSILE IMPACT DETAILS

Sheet No
20 / 44

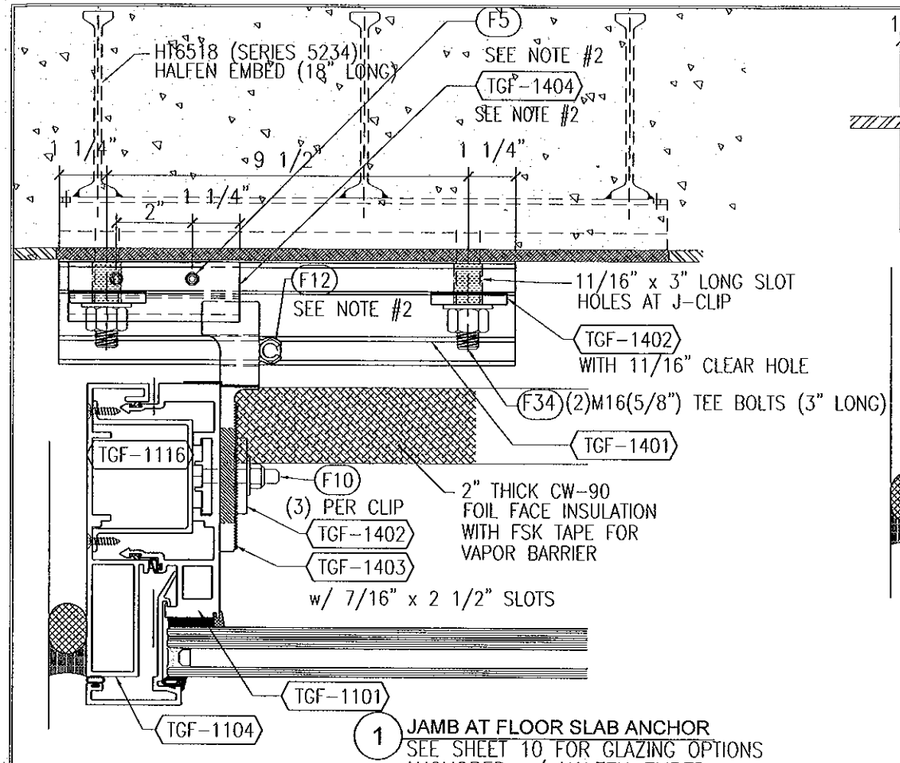

1 JAMB AT FLOOR SLAB ANCHOR
SEE SHEET 10 FOR GLAZING OPTIONS
ANCHORED w/ HALFEN EMBED

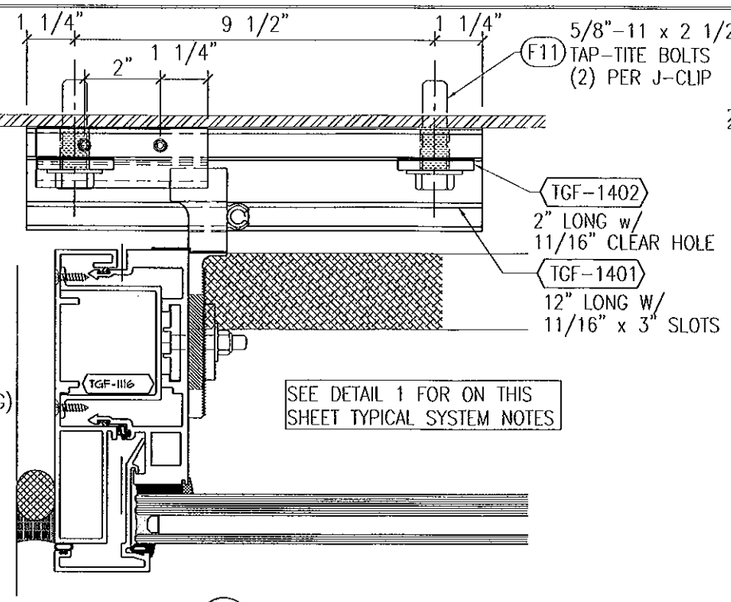

2 JAMB ANCHOR AT TUBE STEEL
SEE SHEET 10 FOR GLAZING OPTIONS
ANCHORED w/ 5/8" TAP-TITE BOLTS

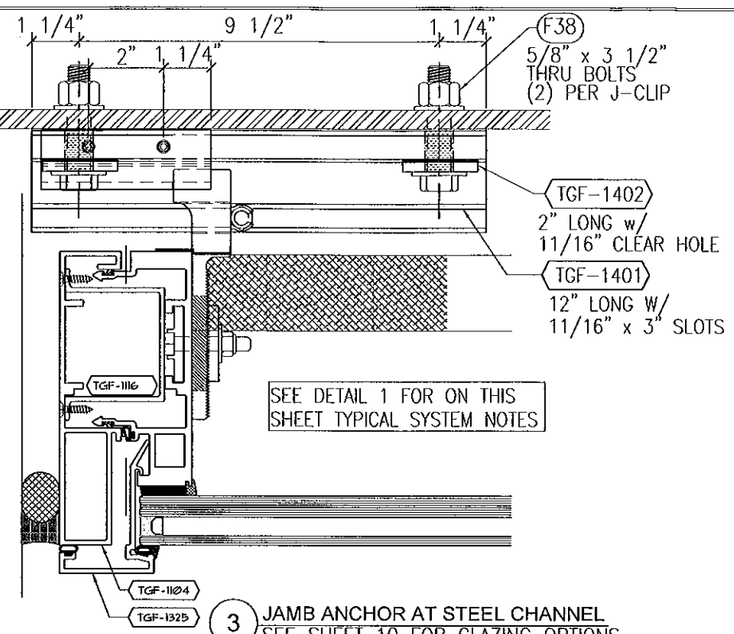

3 JAMB ANCHOR AT STEEL CHANNEL
SEE SHEET 10 FOR GLAZING OPTIONS
ANCHORED w/ 5/8" THRU BOLTS

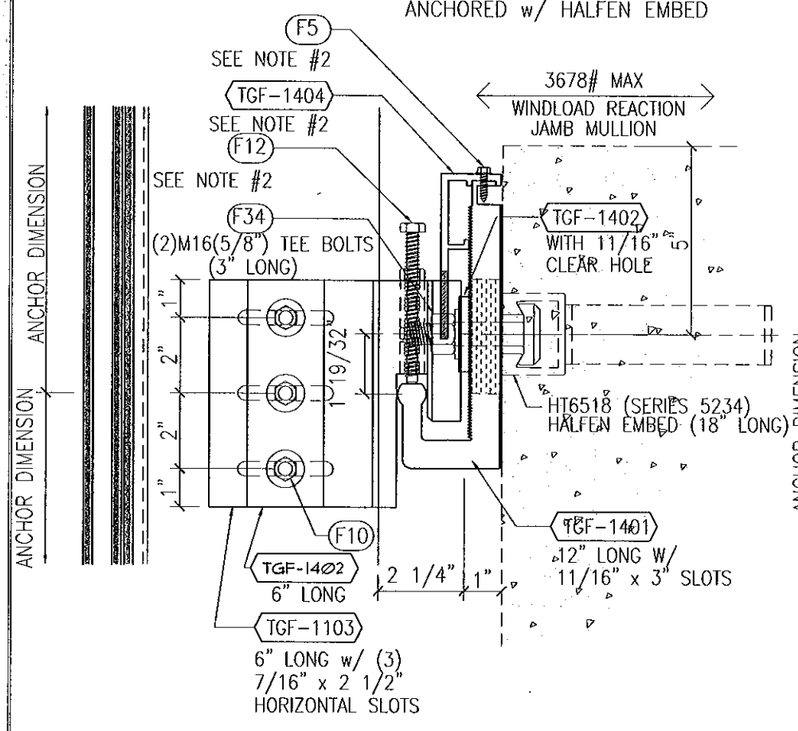

1A DL ANCHOR AT FLOOR SLAB (SIDE VIEW)
SEE SHEET 10 FOR GLAZING OPTIONS
ANCHORED w/ HALFEN EMBED

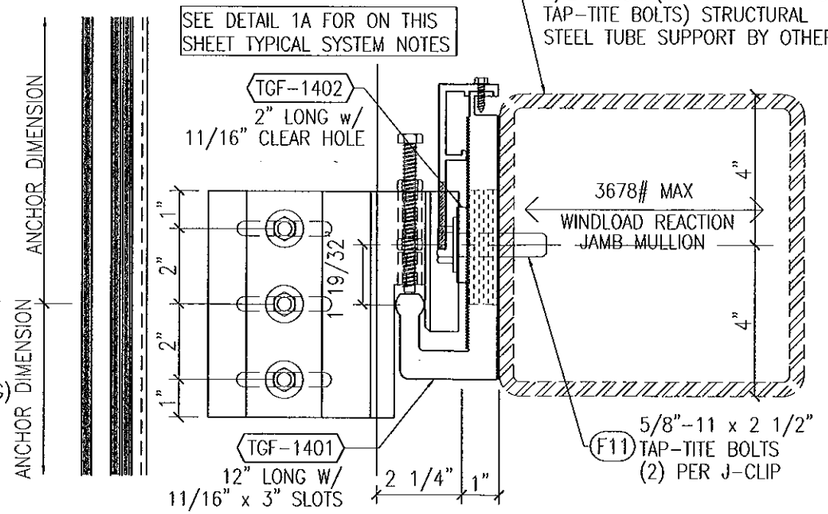

2A DL ANCHOR AT TUBE STEEL SUPPORT (SIDE VIEW)
SEE SHEET 10 FOR GLAZING OPTIONS
ANCHORED w/ 5/8" TAP-TITE BOLTS

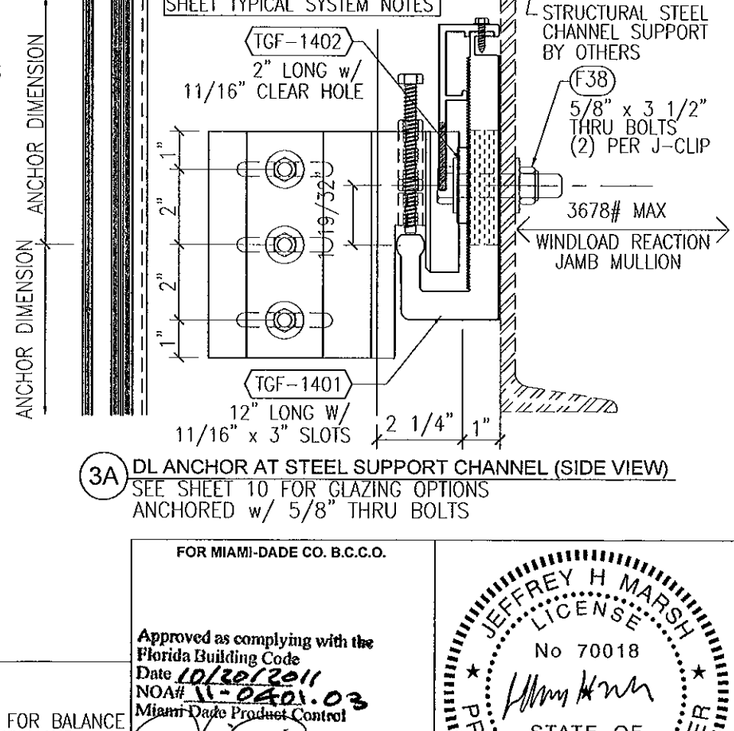

3A DL ANCHOR AT STEEL SUPPORT CHANNEL (SIDE VIEW)
SEE SHEET 10 FOR GLAZING OPTIONS
ANCHORED w/ 5/8" THRU BOLTS

NOTES:

1. SEE DETAILS ON SHEET 10 FOR BALANCE OF JAMB MULLION INFORMATION AND VARIOUS GLAZING OPTIONS
2. INDICATES FASTENERS AND PARTS ARE NOT REQUIRED FOR WINDLOAD ANCHOR CONDITIONS

FOR MIAMI-DADE CO. B.C.C.O.

Approved as complying with the Florida Building Code
Date 10/20/2011
NOA# 11-0401.03
Miami-Dade Product Control
By

JEFFREY H MARSH
LICENSE
No 70018
STATE OF
FLORIDA
PROFESSIONAL ENGINEER
10/4/2011

GLASS COMPANY
1101 13TH STREET WEST RIVIERA BEACH, FLORIDA 33404
PH. (561) 863-7078 FAX (561) 863-7088
www.trainorglass.com
TRAINOR
ILLINOIS FLORIDA GEORGIA NEW JERSEY COLORADO TEXAS ARIZONA VIRGINIA MARYLAND

REVISIONS

NO.	DATE	BY

DESIGN ENGINEERING & CONSULTING Inc.
2200 N. COLLINS BLVD., SUITE 100 RICHARDSON, TEXAS 75080
PH: 972-644-2660 FAX: 972-644-4524

Date	Scale
3-3-11	HALF

Drawing No
4326435

Drawing Title
90 PSF
SMALL MISSILE IMPACT
ANCHOR DETAILS

Sheet No
21 / 44

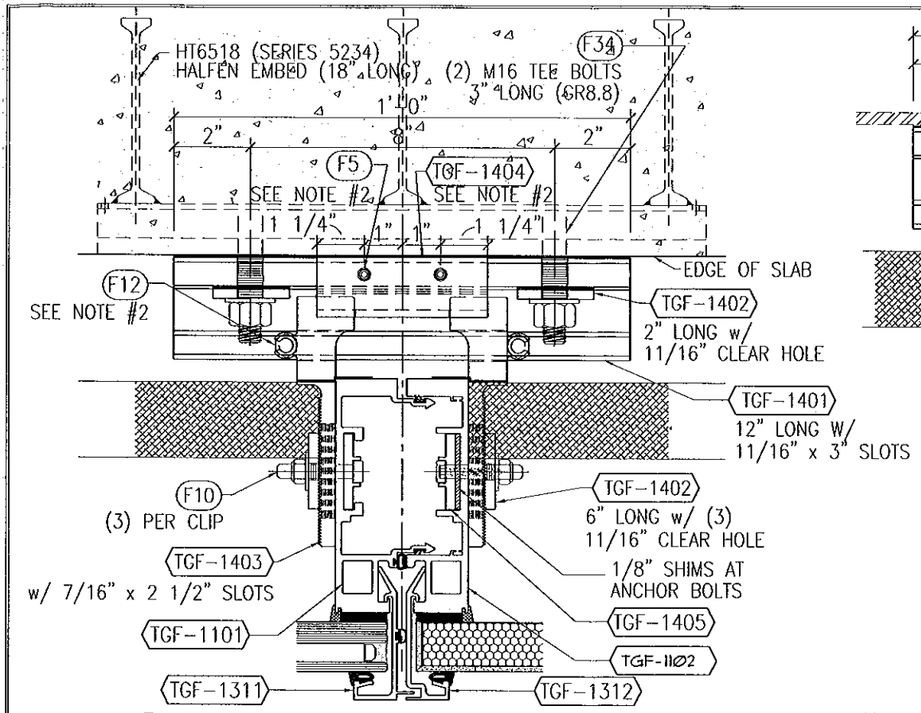

1 INT MULL AT FLOOR SLAB ANCHOR
SEE SHEET 11 FOR GLAZING OPTIONS
ANCHORED w/ HALFEN EMBED

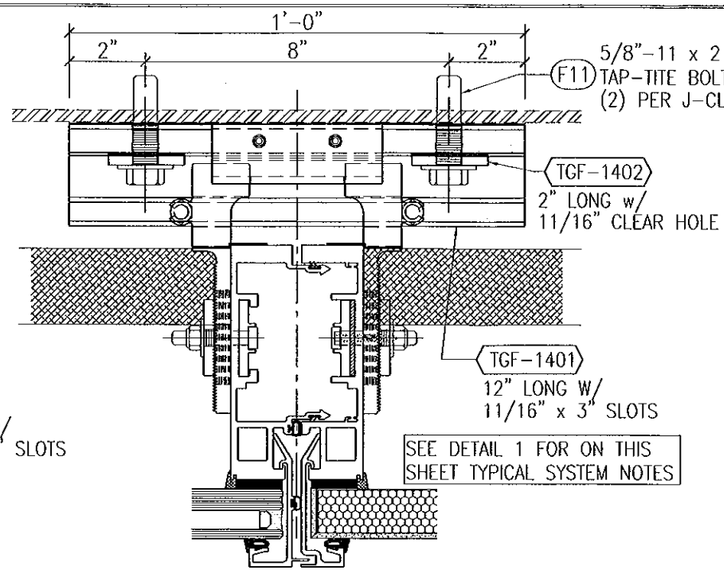

2 INT MULL AT TUBE STEEL
SEE SHEET 11 FOR GLAZING OPTIONS
ANCHORED w/ 5/8" TAP-TITE BOLTS

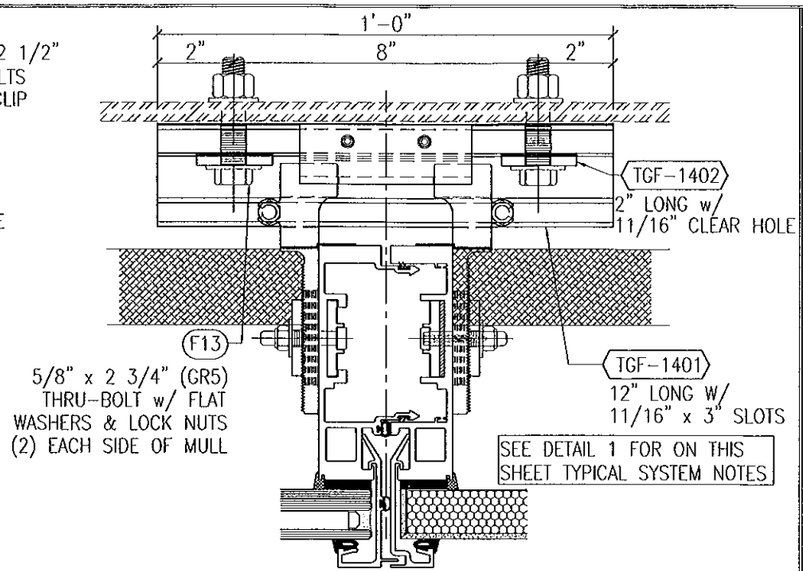

3 INT MULL AT STEEL CHANNEL
SEE SHEET 11 FOR GLAZING OPTIONS
ANCHORED w/ 5/8" THRU BOLTS

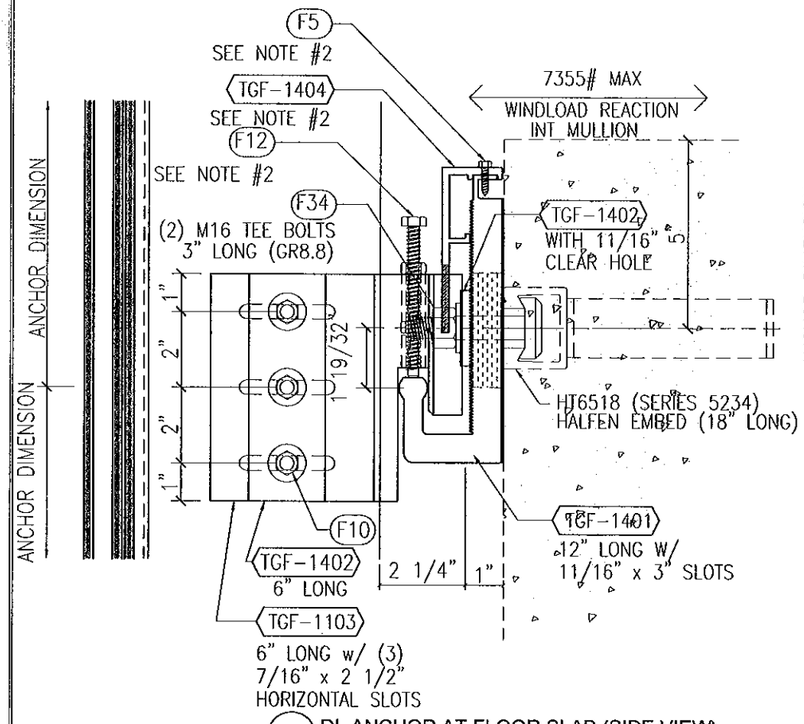

1A DL ANCHOR AT FLOOR SLAB (SIDE VIEW)
SEE SHEET 11 FOR GLAZING OPTIONS
ANCHORED w/ HALFEN EMBED

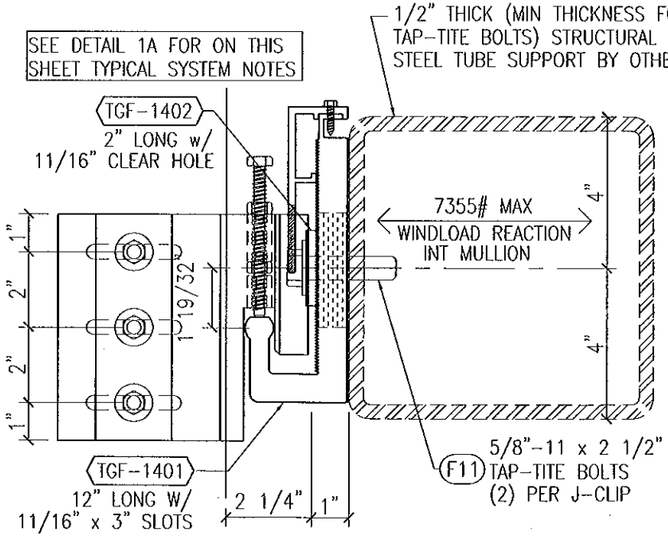

2A DL ANCHOR AT TUBE STEEL SUPPORT (SIDE VIEW)
SEE SHEET 11 FOR GLAZING OPTIONS
ANCHORED w/ 5/8" TAP-TITE BOLTS

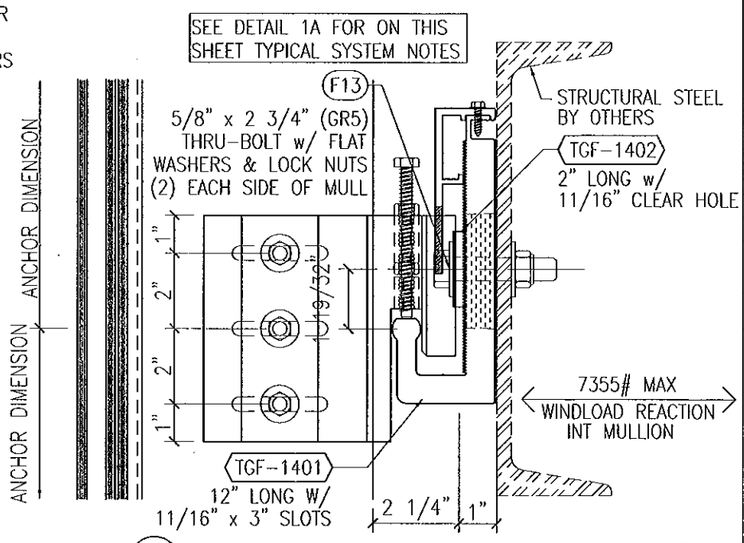

3A DL ANCHOR AT STEEL CHANNEL SUPPORT (SIDE VIEW)
SEE SHEET 11 FOR GLAZING OPTIONS
ANCHORED w/ 5/8" THRU BOLTS

NOTES:

1. SEE DETAILS ON SHEET 11 FOR BALANCE OF INTERMEDIATE MULLION INFORMATION AND VARIOUS GLAZING OPTIONS
2. INDICATES FASTENERS AND PARTS ARE NOT REQUIRED FOR WINDLOAD ANCHOR CONDITIONS

FOR MIAMI-DADE CO. B.C.C.O.

Approved as complying with the Florida Building Code
Date 10/20/2011
NOA# 11-0401.03
Miami Dade Product Control
By

JEFFREY H MARSH
LICENSE
No 70018
STATE OF
FLORIDA
PROFESSIONAL ENGINEER
10/1/2011

GLASS COMPANY
1101 13TH STREET WEST RIVIERA BEACH, FLORIDA 33404
PH. (561) 863-7078 FAX (561) 863-7088
www.trainorglass.com
TRAINOR
ILLINOIS FLORIDA GEORGIA NEW JERSEY COLORADO TEXAS ARIZONA VIRGINIA MARYLAND

REVISIONS

NO.	DATE	BY

DESIGN ENGINEERING & CONSULTING Inc.
2235 N. COLLINS BLVD., SUITE 100
RICHARDSON, TEXAS 75080
PH: 972-644-4440
FAX: 972-644-4434

Date	Scale
3-3-11	HALF

Drawing No
4326435

Drawing Title
90 PSF
SMALL MISSILE IMPACT
ANCHOR DETAILS

Sheet No
22 / 44

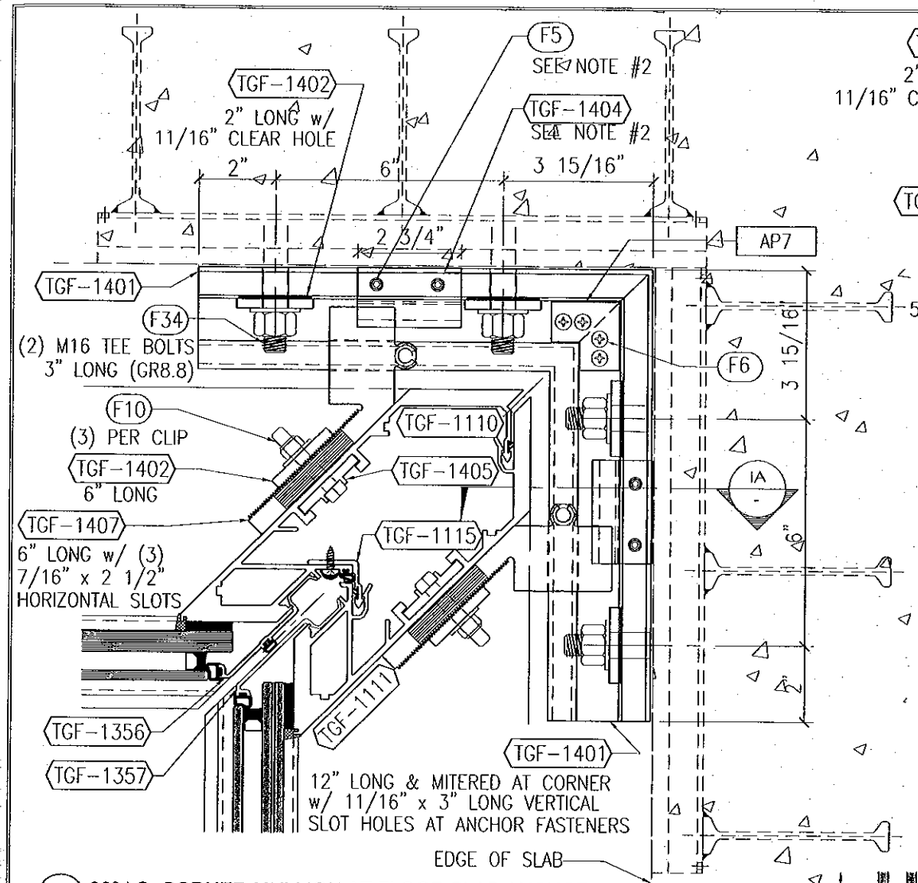

1 90° I.S. CORNER MULLION AT FLOOR SLAB ANCHOR
SEE SHEET 12 FOR GLAZING OPTIONS
ANCHORED w/ HALFEN CORNER EMBED

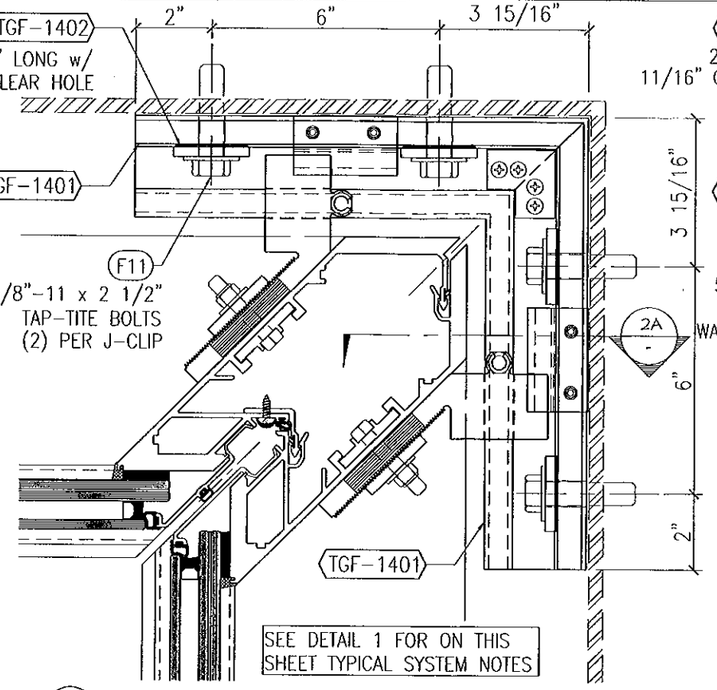

2 90° I.S. CORNER MULLION AT TUBE STEEL
SEE SHEET 12 FOR GLAZING OPTIONS
ANCHORED w/ 5/8" TAP-TITE BOLTS

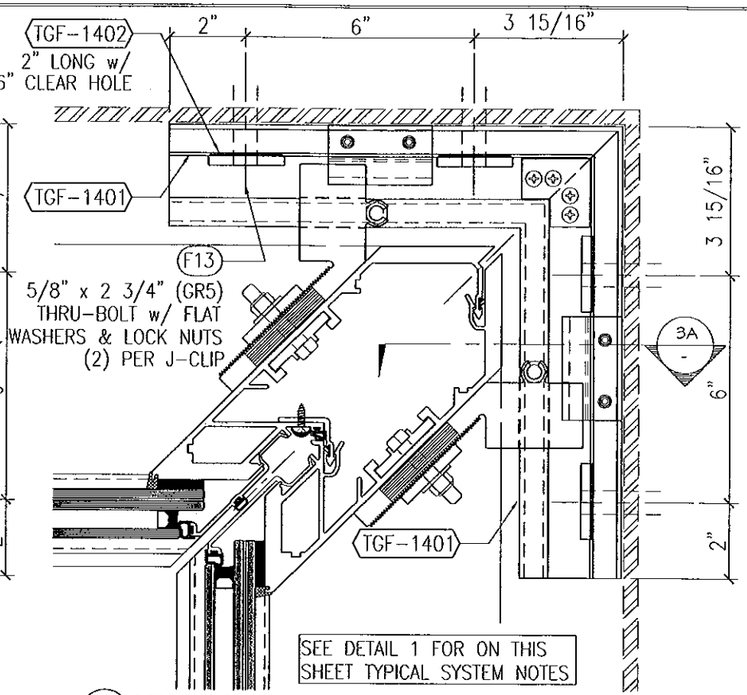

3 90° I.S. CORNER MULLION AT STEEL CHANNEL
SEE SHEET 12 FOR GLAZING OPTIONS
ANCHORED w/ 5/8" THRU BOLTS

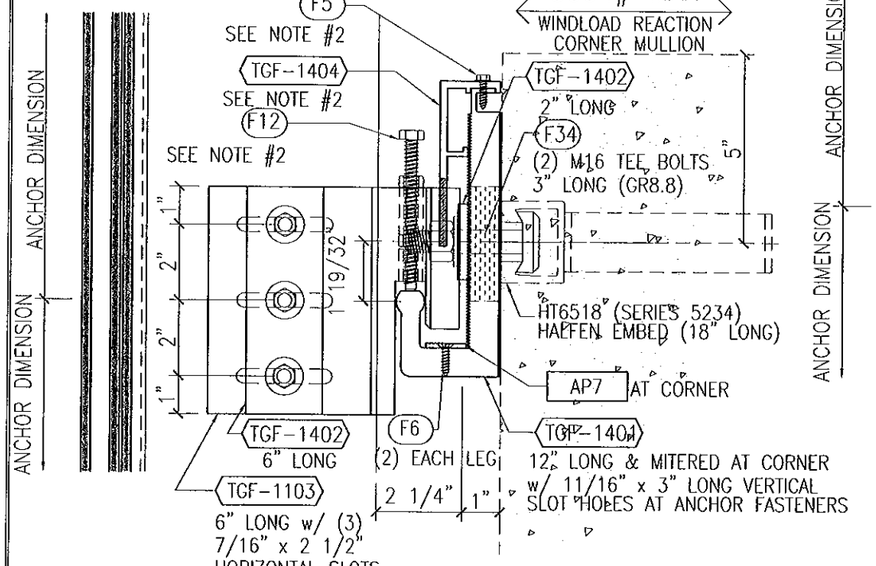

1A DL ANCHOR AT FLOOR SLAB (SIDE VIEW)
SEE SHEET 12 FOR GLAZING OPTIONS
ANCHORED w/ HALFEN CORNER EMBED

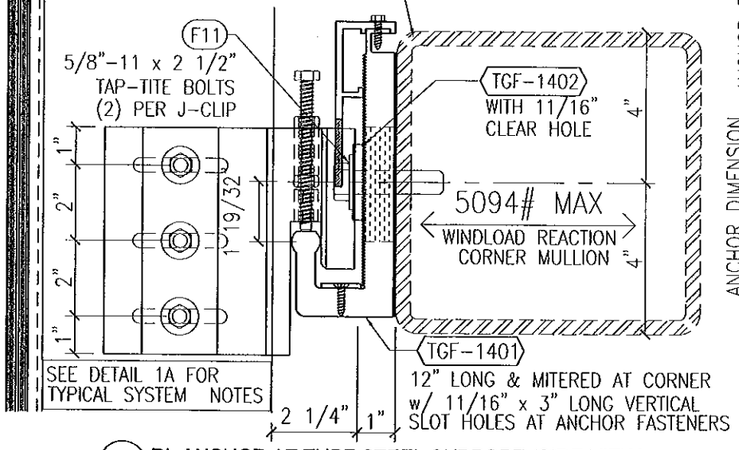

2A DL ANCHOR AT TUBE STEEL SUPPORT (SIDE VIEW)
SEE SHEET 12 FOR GLAZING OPTIONS
ANCHORED w/ 5/8" TAP-TITE BOLTS

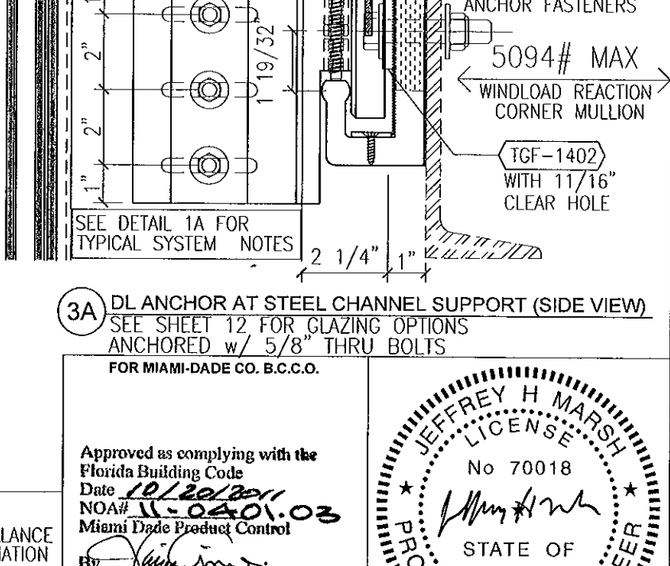

3A DL ANCHOR AT STEEL CHANNEL SUPPORT (SIDE VIEW)
SEE SHEET 12 FOR GLAZING OPTIONS
ANCHORED w/ 5/8" THRU BOLTS

NOTES:

1. SEE DETAILS ON SHEET 12 FOR BALANCE OF INSIDE CORNER MULLION INFORMATION AND VARIOUS GLAZING OPTIONS
2. INDICATES FASTENERS AND PARTS ARE NOT REQUIRED FOR WINDLOAD ANCHOR CONDITIONS

FOR MIAMI-DADE CO. B.C.C.O.

Approved as complying with the
Florida Building Code
Date 10/20/2011
NOA# 11-0401.03
Miami Dade Product Control
By

JEFFREY H MARSH
LICENSE
No 70018
STATE OF
FLORIDA
PROFESSIONAL ENGINEER
10/4/2011

GLASS COMPANY
1101 13TH STREET WEST RIVIERA BEACH, FLORIDA 33404
PH. (561) 863-7078 FAX (561) 863-7088
www.trainorglass.com
TRAINOR
ILLINOIS FLORIDA GEORGIA NEW JERSEY COLORADO TEXAS ARIZONA VIRGINIA MARYLAND

REVISIONS

NO.	DATE	BY

DESIGN ENGINEERING & CONSULTING Inc
PH: 972-644-2000
FAX: 972-644-2004
2306 N. COLLINS BLVD. - SUITE 100
RICHARDSON, TEXAS 75080

Date	Scale
3-3-11	HALF

Drawing No
4326435

Drawing Title
90 PSF
SMALL MISSILE IMPACT
ANCHOR DETAILS

Sheet No
23 / 44

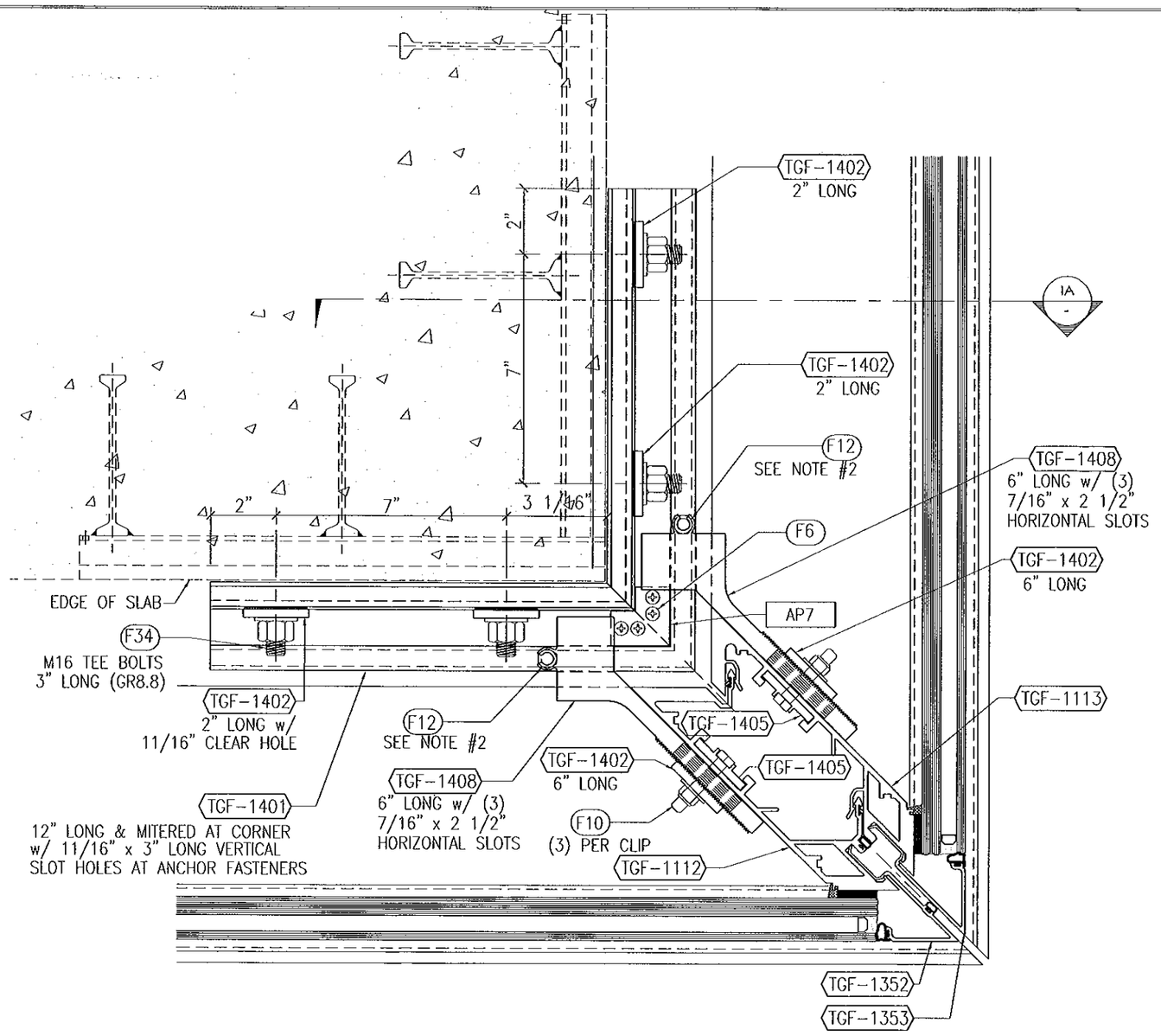

1 **90° O.S. CORNER MULL AT FLOOR SLAB ANCHOR**
SEE SHEET 13 FOR GLAZING OPTIONS
ANCHORED w/ HALFEN CUSTOM CORNER EMBED

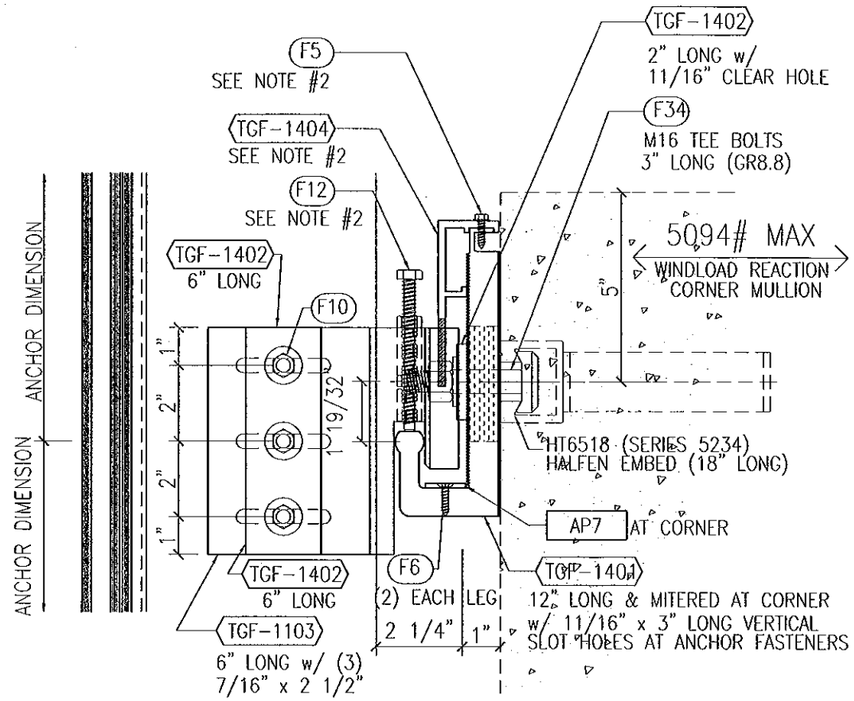

1A **DL ANCHOR AT FLOOR SLAB (SIDE VIEW)**
SEE SHEET 13 FOR GLAZING OPTIONS
ANCHORED w/ HALFEN CUSTOM CORNER EMBED

NOTES:

1. SEE DETAILS ON SHEET 13 FOR BALANCE OF OUTSIDE CORNER MULLION INFORMATION AND VARIOUS GLAZING OPTIONS
2. INDICATES FASTENERS AND PARTS ARE NOT REQUIRED FOR WINDLOAD ANCHOR CONDITIONS

FOR MIAMI-DADE CO. B.C.C.O.

Approved as complying with the Florida Building Code
Date 10/20/2011
NOA# 11-0401.03
Miami-Dade Product Control
By

JEFFREY H MARSH
LICENSE
No 70018
STATE OF
FLORIDA
PROFESSIONAL ENGINEER
10/4/2011

GLASS COMPANY
1101 13TH STREET WEST RIVIERA BEACH, FLORIDA 33404
PH. (561) 863-7078 FAX (561) 863-7088
www.trainorglass.com
TRAINOR
ILLINOIS FLORIDA GEORGIA NEW JERSEY COLORADO TEXAS ARIZONA VIRGINIA MARYLAND

REVISIONS

NO.	DATE	BY
1		
2		
3		
4		
5		
6		

DESIGN ENGINEERING & CONSULTING Inc.

Date	Scale
3-3-11	HALF

Drawing No
4326435

Drawing Title
90 PSF
SMALL MISSILE IMPACT
ANCHOR DETAILS

Sheet No
24 / 44

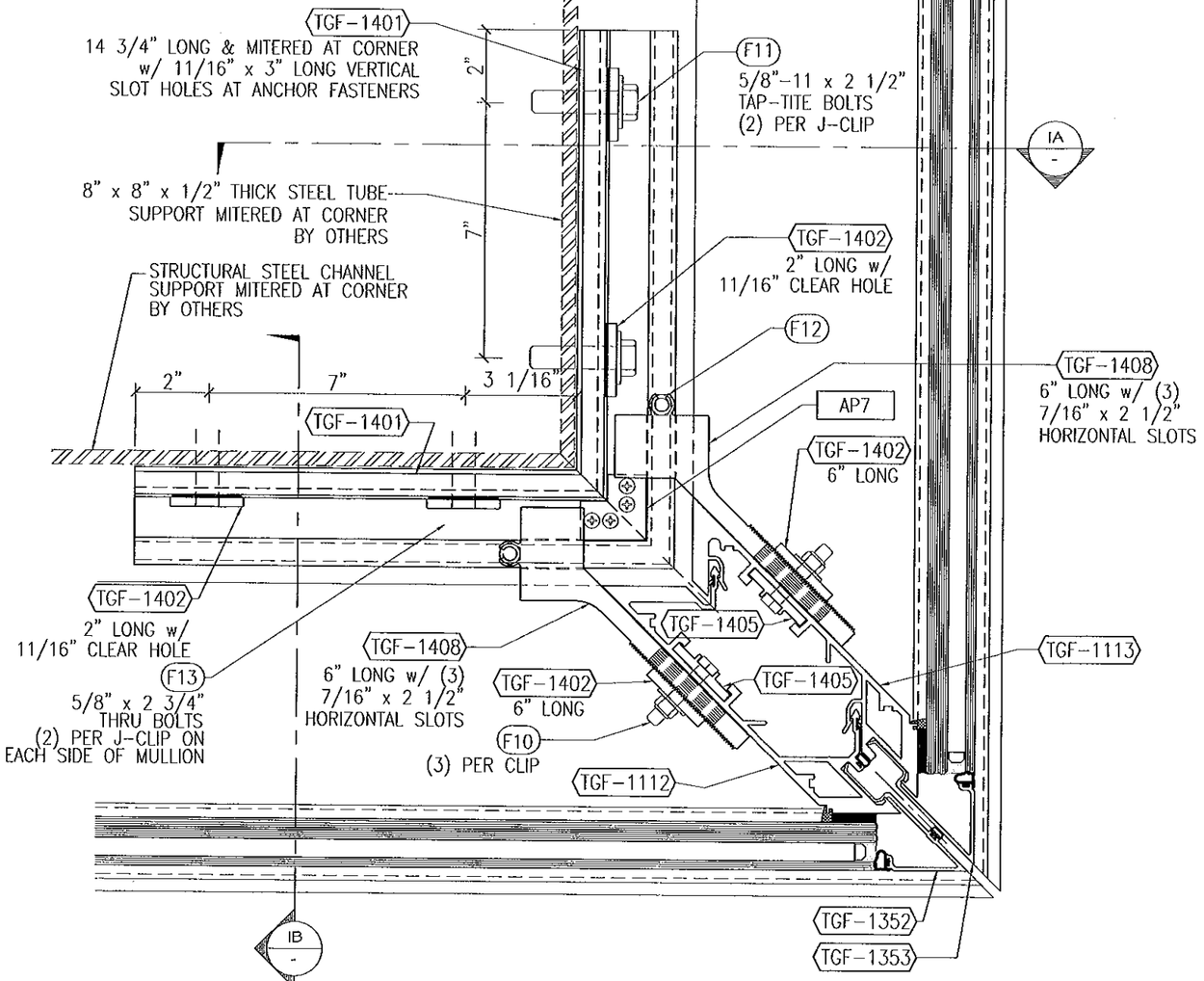

1 90° O.S. CORNER MULL AT TUBE STEEL SUPPORT
SEE SHEET 13 FOR GLAZING OPTIONS
ANCHORED w/ 5/8" TAP-TITE OR 5/8" THRU BOLTS

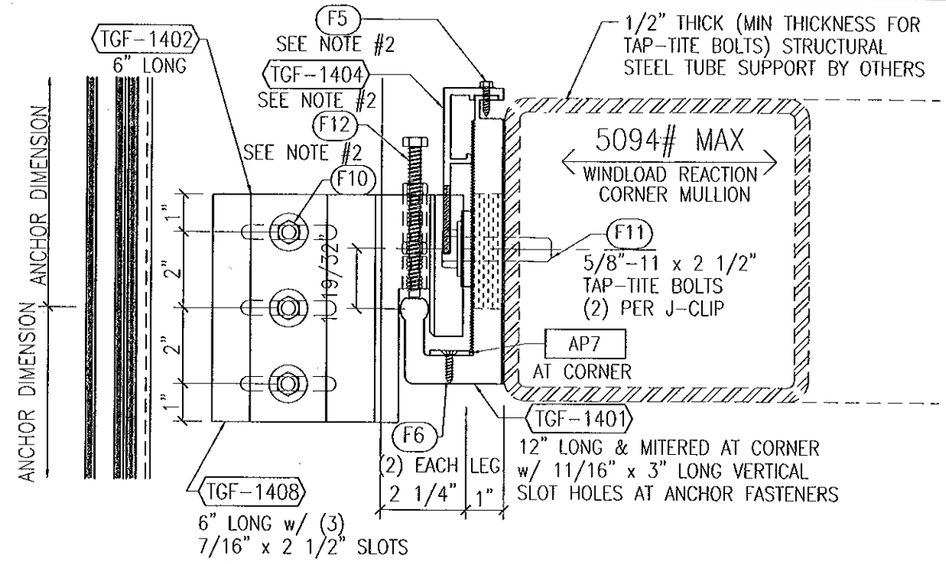

1A DL ANCHOR AT STRUCTURAL STEEL SUPPORT (SIDE VIEW)
SEE SHEET 13 FOR GLAZING OPTIONS
ANCHORED w/ 5/8" TAP-TITE BOLTS

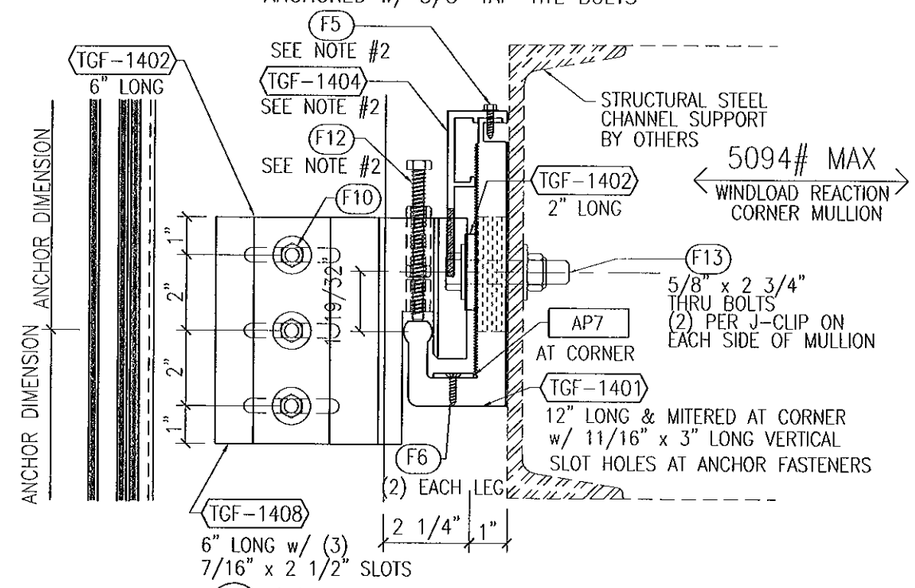

1B DL ANCHOR AT STRUCTURAL STEEL SUPPORT (SIDE VIEW)
SEE SHEET 13 FOR GLAZING OPTIONS
ANCHORED w/ 5/8" THRU BOLTS

NOTES:

1. SEE DETAILS ON SHEET 13 FOR BALANCE OF OUTSIDE CORNER MULLION INFORMATION AND VARIOUS GLAZING OPTIONS
2. INDICATES FASTENERS AND PARTS ARE NOT REQUIRED FOR WINDLOAD ANCHOR CONDITIONS

FOR MIAMI-DADE CO. B.C.C.O.

Approved as complying with the Florida Building Code
Date 10/20/2011
NOA# 11-0401.03
Miami Dade Product Control
By

JEFFREY H MARSH
LICENSE
No 70018
STATE OF FLORIDA
PROFESSIONAL ENGINEER
10/4/2011

GLASS COMPANY
1101 13TH STREET WEST RIVIERA BEACH, FLORIDA 33404
PH. (561) 863-7078 FAX (561) 863-7088
www.trainorglass.com
TRAINOR
ILLINOIS FLORIDA GEORGIA NEW JERSEY COLORADO TEXAS ARIZONA VIRGINIA MARYLAND

REVISIONS

NO.	DATE	BY
1		
2		
3		
4		
5		
6		

DESIGN ENGINEERING & CONSULTING

Date	Scale
3-3-11	HALF

Drawing No
4326435

Drawing Title
90 PSF SMALL MISSILE IMPACT ANCHOR DETAILS

Sheet No
25 / 44

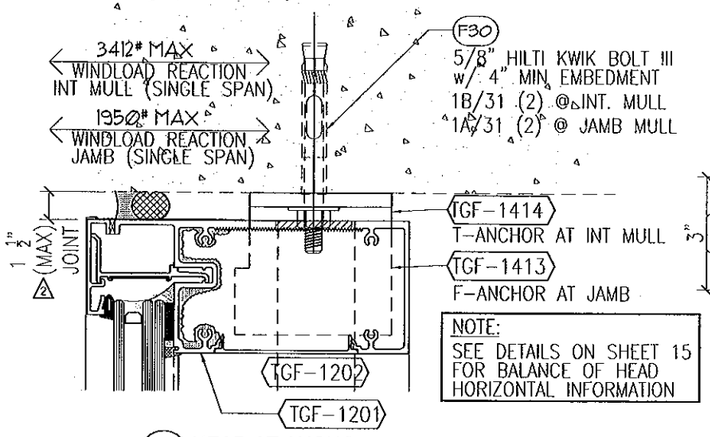

NOTE:
SEE DETAILS ON SHEET 15 FOR BALANCE OF HEAD HORIZONTAL INFORMATION

1 HEAD AT ANCHOR
(SEE SHEET 15 FOR GLAZING OPTIONS)
ANCHORED w/ 5/8" EXPANSION BOLT

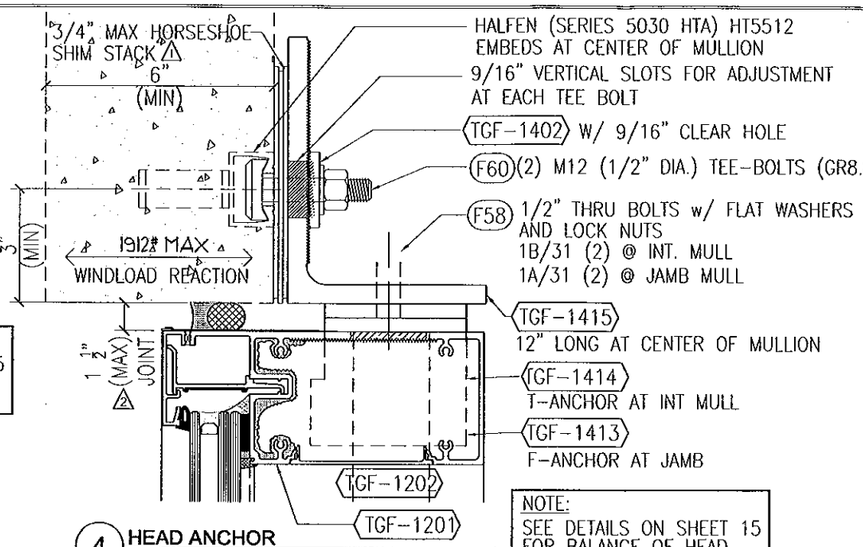

NOTE:
SEE DETAILS ON SHEET 15 FOR BALANCE OF HEAD HORIZONTAL INFORMATION

4 HEAD ANCHOR
(SEE SHEET 15 FOR GLAZING OPTIONS)
ANCHORED w/ HALFEN EMBED

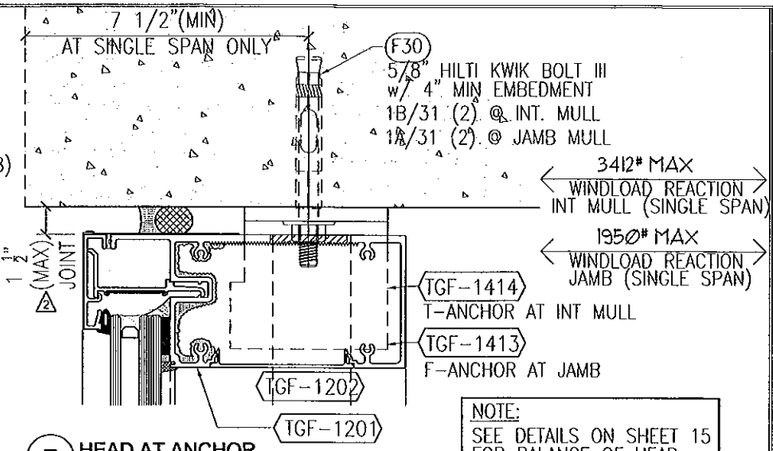

NOTE:
SEE DETAILS ON SHEET 15 FOR BALANCE OF HEAD HORIZONTAL INFORMATION

7 HEAD AT ANCHOR
(SEE SHEET 15 FOR GLAZING OPTIONS)
ANCHORED w/ 5/8" EXPANSION BOLT

NOTE:
SEE DETAILS ON SHEET 15 FOR BALANCE OF HEAD HORIZONTAL INFORMATION

2 HEAD AT ANCHOR
(SEE SHEET 15 FOR GLAZING OPTIONS)
ANCHORED w/ HALFEN EMBED

NOTE:
SEE DETAILS ON SHEET 15 FOR BALANCE OF HEAD HORIZONTAL INFORMATION

5 HEAD AT ANCHOR
(SEE SHEET 15 FOR GLAZING OPTIONS)
ANCHORED w/ HALFEN EMBED

NOTE:
SEE DETAILS ON SHEET 15 FOR BALANCE OF HEAD HORIZONTAL INFORMATION

8 HEAD ANCHOR
(SEE SHEET 15 FOR GLAZING OPTIONS)
ANCHORED w/ HALFEN EMBED

NOTE:
SEE DETAILS ON SHEET 15 FOR BALANCE OF HEAD HORIZONTAL INFORMATION

3 HEAD AT ANCHOR
(SEE SHEET 15 FOR GLAZING OPTIONS)
ANCHORED w/ 1/2" TAP-TITE BOLTS

NOTE:
SEE DETAILS ON SHEET 15 FOR BALANCE OF HEAD HORIZONTAL INFORMATION

6 HEAD AT ANCHOR
(SEE SHEET 15 FOR GLAZING OPTIONS)
ANCHORED w/ 1/2" THRU BOLT

FOR MIAMI-DADE CO. B.C.C.O.

Approved as complying with the
Florida Building Code
Date 10/20/2011
NOA# 11-0401.03
Miami Dade Product Control
By

JEFFREY H MARSH
LICENSE
No 70018
STATE OF
FLORIDA
PROFESSIONAL ENGINEER
10/4/2011

GLASS COMPANY
1101 13TH STREET WEST RIVIERA BEACH, FLORIDA 33404
PH. (561) 863-7078 FAX (561) 863-7088
www.trainorglass.com
TRAINOR
ILLINOIS FLORIDA GEORGIA NEW JERSEY COLORADO TEXAS ARIZONA VIRGINIA MARYLAND

REVISIONS

NO.	DATE	BY	
1	6/14/11	GEC	ADDED NOTE FOR SHEET
2	10/04/11	GEC	REVISED MAX JOINT

DESIGN ENGINEERING & CONSULTING Inc.
2215 N. COMMERCE BLVD., SUITE 100 PH: 972-344-2869
ROANOKE, TEXAS 76262 FAX: 972-344-2894

Date	Scale
3-3-11	HALF

Drawing No
4326435

Drawing Title
90 PSF
SMALL MISSILE IMPACT
ANCHOR DETAILS

Sheet No
26 / 44

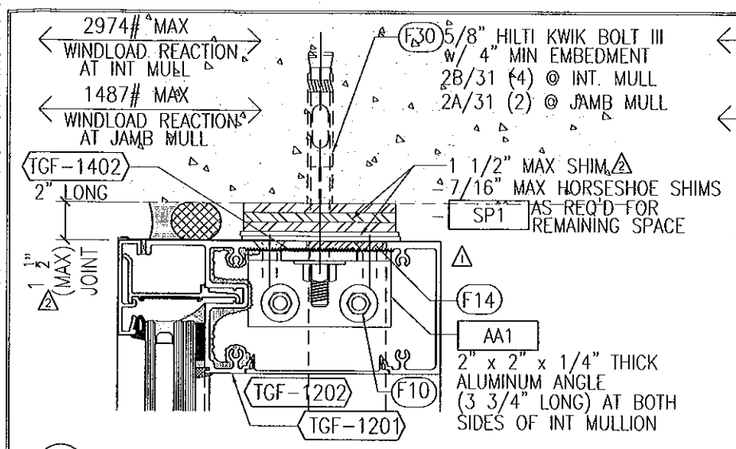

1 HEAD AT DL ANCHOR (MULTISPAN ONLY)
(SEE SHEET 15 FOR GLAZING OPTIONS)
ANCHORED w/ 5/8" EXPANSION BOLT

NOTE:
SEE DETAILS ON SHEET 15 FOR BALANCE OF HEAD HORIZONTAL INFORMATION

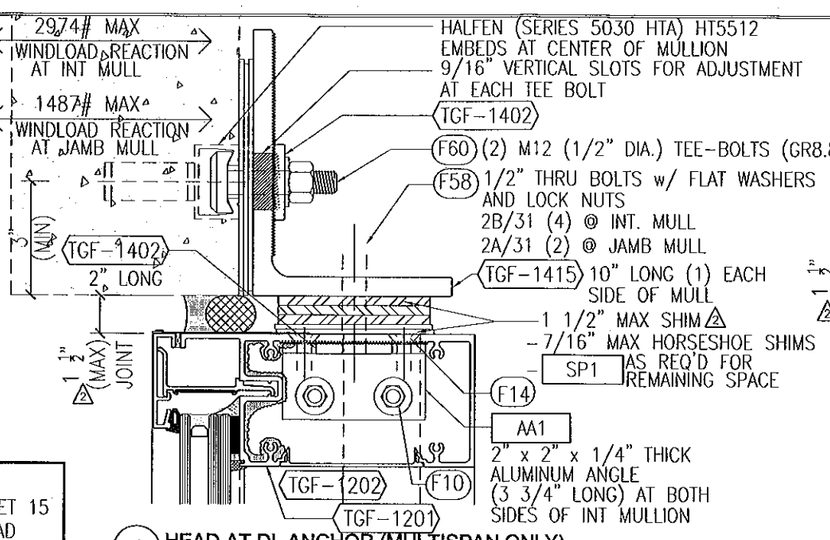

4 HEAD AT DL ANCHOR (MULTISPAN ONLY)
(SEE SHEET 15 FOR GLAZING OPTIONS)
ANCHORED w/ HALFEN EMBED

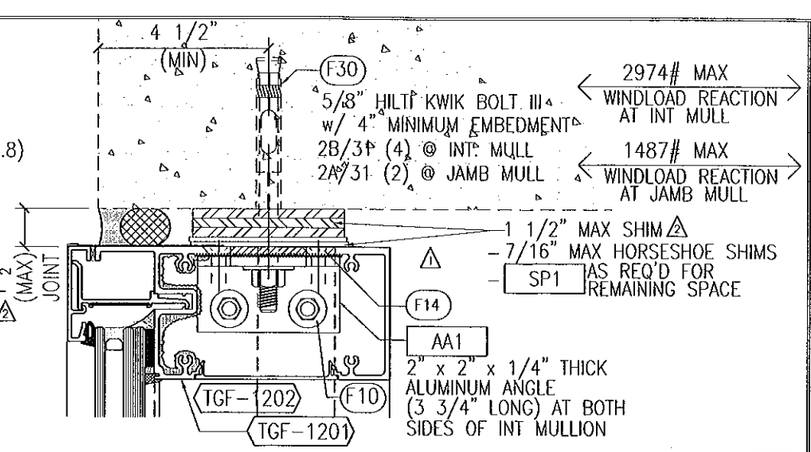

7 HEAD AT DL ANCHOR (MULTISPAN ONLY)
(SEE SHEET 15 FOR GLAZING OPTIONS)
ANCHORED w/ 5/8" EXPANSION BOLT

NOTE:
SEE DETAILS ON SHEET 15 FOR BALANCE OF HEAD HORIZONTAL INFORMATION

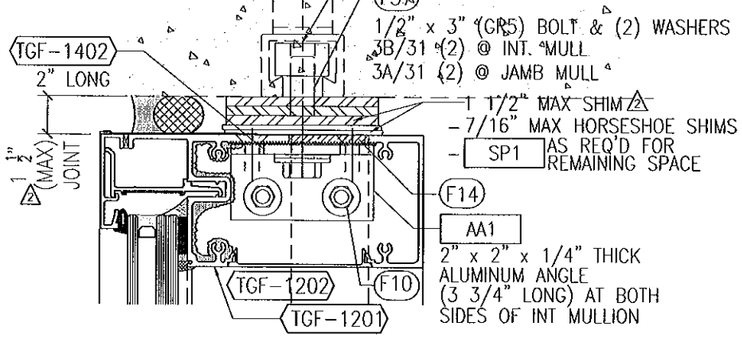

2 HEAD AT DL ANCHOR (MULTISPAN ONLY)
(SEE SHEET 15 FOR GLAZING OPTIONS)
ANCHORED w/ HALFEN EMBED

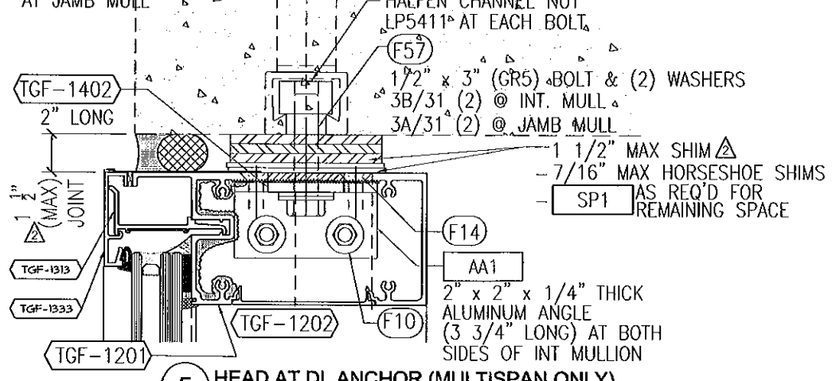

5 HEAD AT DL ANCHOR (MULTISPAN ONLY)
(SEE SHEET 15 FOR GLAZING OPTIONS)
ANCHORED w/ HALFEN EMBED

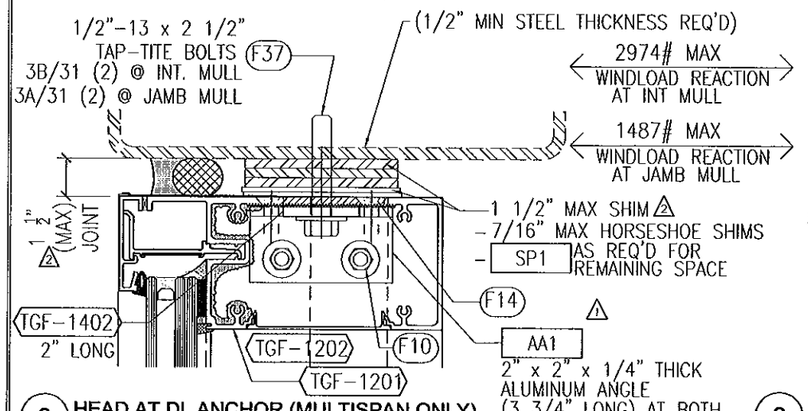

3 HEAD AT DL ANCHOR (MULTISPAN ONLY)
(SEE SHEET 15 FOR GLAZING OPTIONS)
ANCHORED w/ 1/2" TAP-TITE BOLTS

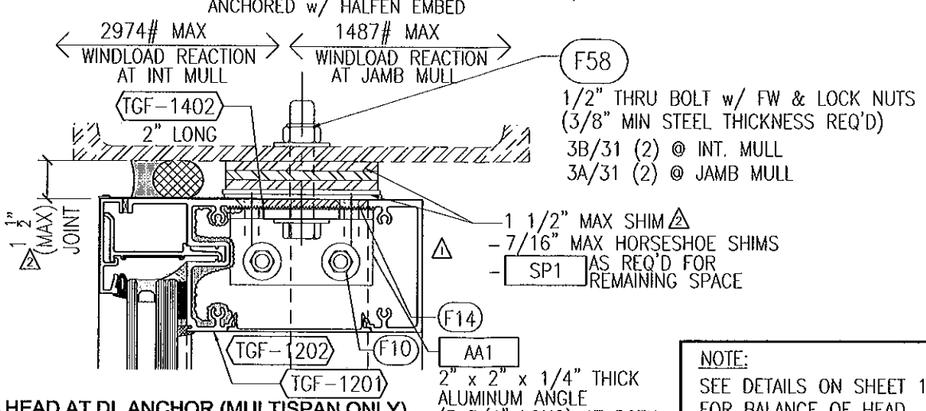

6 HEAD AT DL ANCHOR (MULTISPAN ONLY)
(SEE SHEET 15 FOR GLAZING OPTIONS)
ANCHORED w/ 1/2" THRU BOLTS

NOTE:
SEE DETAILS ON SHEET 15 FOR BALANCE OF HEAD HORIZONTAL INFORMATION

FOR MIAMI-DADE CO. B.C.C.O.

Approved as complying with the Florida Building Code
Date 10/20/2011
NOA# 11-0401.03
Miami Dade Product Control
By

JEFFREY H MARSH LICENSE No 70018 STATE OF FLORIDA PROFESSIONAL ENGINEER
10/4/2011

GLASS COMPANY
1101 13TH STREET WEST RIVIERA BEACH, FLORIDA 33404
PH. (561) 863-7078 FAX (561) 863-7088
www.trainorglass.com
TRAINOR
ILLINOIS FLORIDA GEORGIA NEW JERSEY COLORADO TEXAS ARIZONA VIRGINIA MARYLAND

NO.	DATE	BY	REVISIONS
1	5/14/11	BEC	ADDED NOTE FOR SHIMS
2	10/04/11	BEC	REVISED NOA #

DESIGN ENGINEERING & CONSULTING
2855 N. COLLINS BLVD. SUITE 100 RICHARDSON, TEXAS 75080
PH: 972-644-2800 FAX: 972-644-4224

Date	Scale
3-3-11	HALF

Drawing No
4326435

Drawing Title
90 PSF SMALL MISSILE IMPACT ANCHOR DETAILS

Sheet No
27 / 44

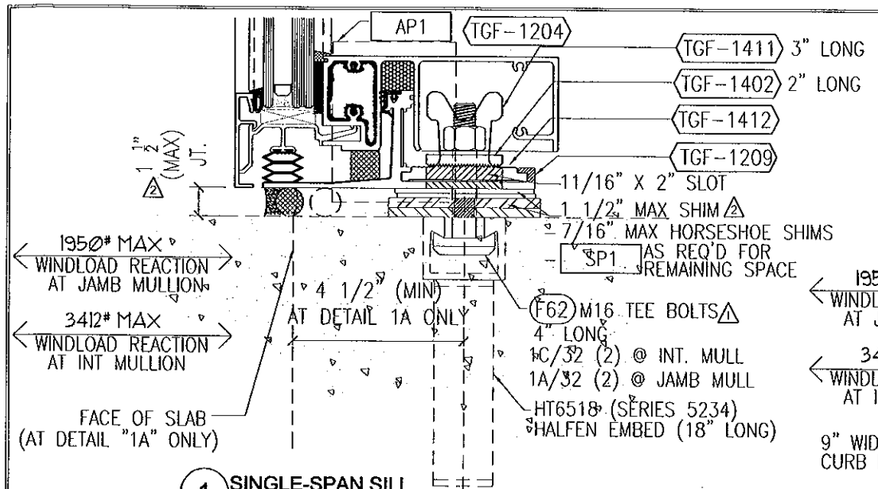

1 **SINGLE-SPAN SILL**
(SEE SHEET 17 FOR GLAZING OPTIONS)
ANCHORED w/ HALFEN EMBED

1A **SINGLE-SPAN SILL W/ SLAB EDGE**
AT CONCRETE SLAB EDGE
ANCHORED w/ HALFEN EMBED

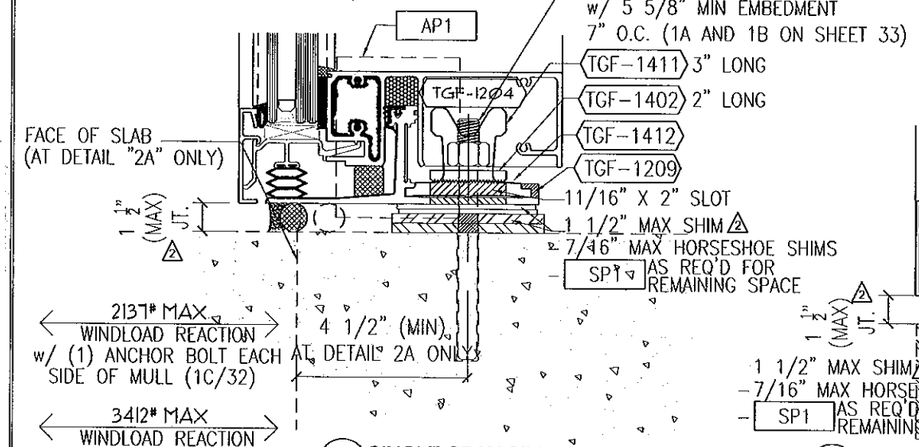

2 **SINGLE-SPAN SILL**
(SEE SHEET 17 FOR GLAZING OPTIONS)
ANCHORED w/ 5/8" EPOXY ANCHOR BOLT

2A **SINGLE-SPAN SILL W/ SLAB EDGE**
AT CONCRETE SLAB EDGE
ANCHORED w/ 5/8" EPOXY ANCHOR BOLT

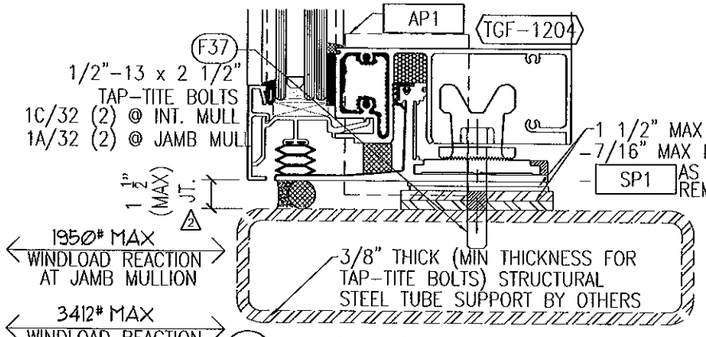

3 **SINGLE-SPAN SILL**
(SEE SHEET 17 FOR GLAZING OPTIONS)
ANCHORED w/ 1/2" TAP-TITE BOLT

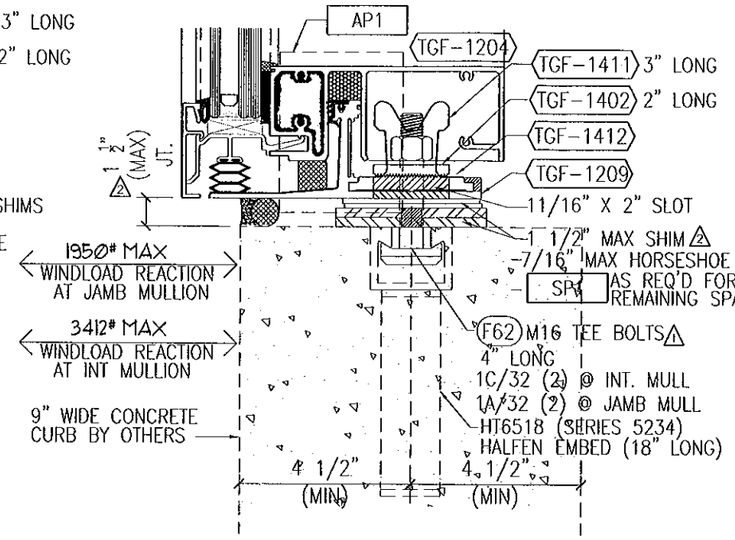

4 **SINGLE-SPAN SILL**
(SEE SHEET 17 FOR GLAZING OPTIONS)
ANCHORED w/ HALFEN EMBED

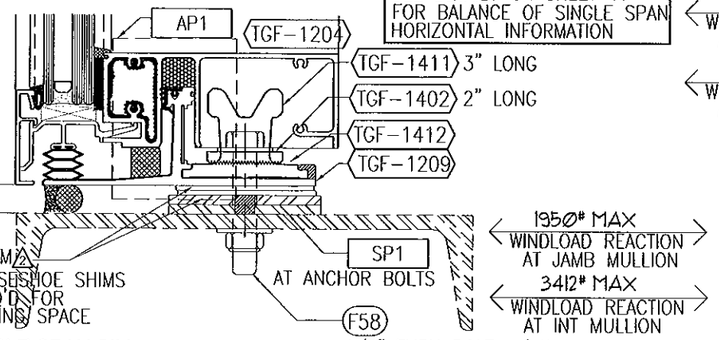

5 **SINGLE-SPAN SILL**
SEE SHEET 17 FOR GLAZING OPTIONS
ANCHORED w/ 5/8" THRU BOLT

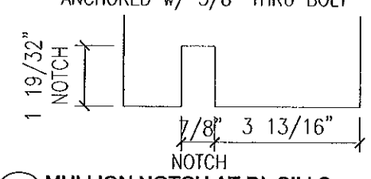

A **MULLION NOTCH AT DL SILLS**
NOTCH AT CHICKEN HEAD OF SILL STARTER

NOTE:
NOTCH BOTTOM OF MULLION AT CHICKEN HEAD 1 19/32" DEEP AT ALL DEADLOAD SILL LOCATIONS

NOTE:
SEE DETAILS ON SHEET 17 FOR BALANCE OF SINGLE SPAN HORIZONTAL INFORMATION

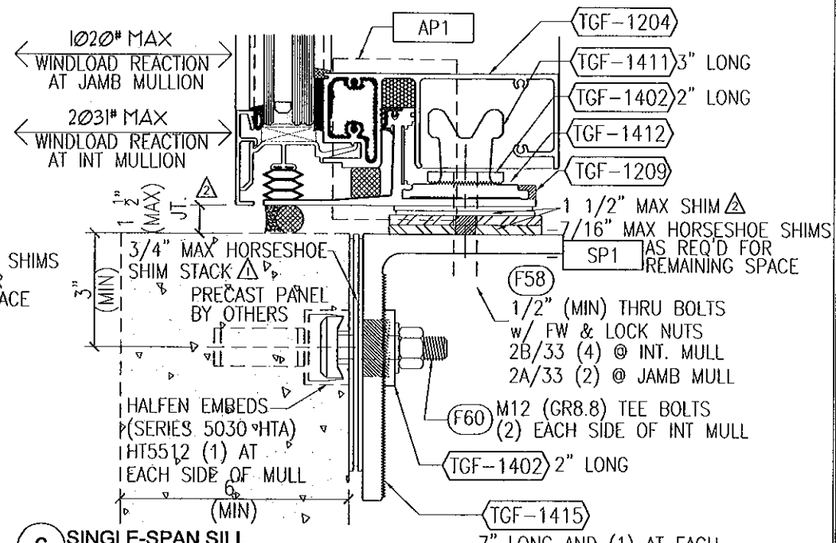

6 **SINGLE-SPAN SILL**
(SEE SHEET 17 FOR GLAZING OPTIONS)
ANCHORED w/ HALFEN EMBED

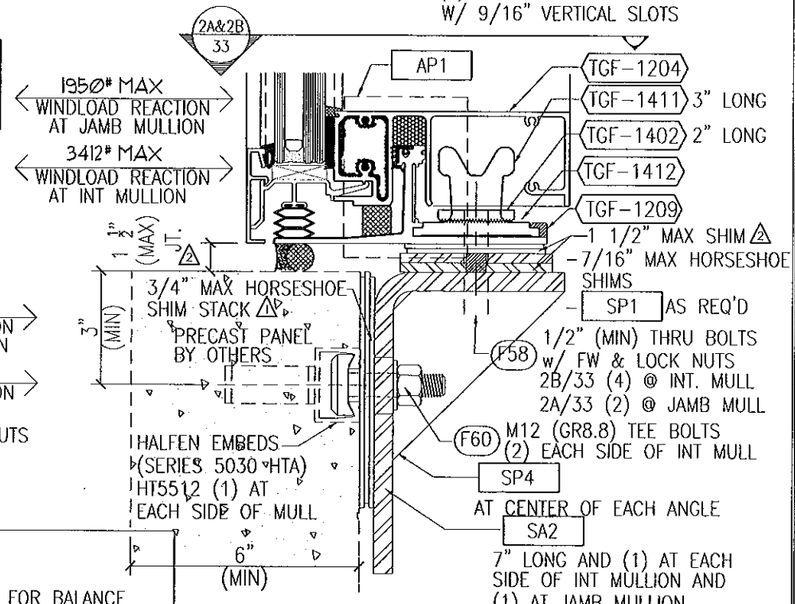

7 **SINGLE-SPAN SILL** W/ 9/16" VERTICAL SLOTS
AT PRECAST PANEL (SEE SHEET 17 FOR GLAZING OPTIONS)
ANCHORED w/ HALFEN EMBED

NOTES:

1. SEE DETAILS ON SHEET 17 FOR BALANCE OF SINGLE SPAN SILL INFORMATION AND VARIOUS GLAZING OPTIONS
2. INDICATES FASTENERS AND PARTS ARE NOT REQUIRED FOR WINDLOAD ANCHOR CONDITIONS
3. MAX WINDLOAD REACTION = 3412# IF (2) 5/8" EPOXY ANCHOR BOLTS w/ 5 5/8" MIN EMBEDMENT ARE USED ON EACH SIDE OF MULLION – (2) AT JAMB

SA2 = 5" x 8" x 1/2" THICK FORMED STEEL ANGLE (7" LONG)

SP1 = 4" x 4" x 1/4" THICK STEEL PLATES

SP4 = 4 1/2" x 4 1/2" x 3/8" THICK STEEL GUSSET PLATE

FOR MIAMI-DADE CO. B.C.C.O.

Approved as complying with the Florida Building Code
Date 10/20/2011
NOA# 11-0201.03
Miami Dade Product Control
By

JEFFREY H MARSH LICENSE No 70018 STATE OF FLORIDA PROFESSIONAL ENGINEER
10/4/2011

GLASS COMPANY
1101 13TH STREET WEST RIVIERA BEACH, FLORIDA 33404
PH. (561) 863-7078 FAX (561) 863-7088
www.trainorglass.com
TRAINOR
ILLINOIS FLORIDA GEORGIA NEW JERSEY COLORADO TEXAS ARIZONA VIRGINIA MARYLAND

REVISIONS

NO.	DATE	BY
1	9/14/11	DSC
2	10/04/11	DSC

DESIGN ENGINEERING & CONSULTING Inc.
FL# 27-84-0562
TEL 972-484-4566
3990 N. COLLINS BLVD. SUITE 134 RICHARDSON, TEXAS 75080

Date	Scale
3-3-11	HALF

Drawing No. 4326435

Drawing Title: 90 PSF SMALL MISSILE IMPACT ANCHOR DETAILS

Sheet No. 28 / 44

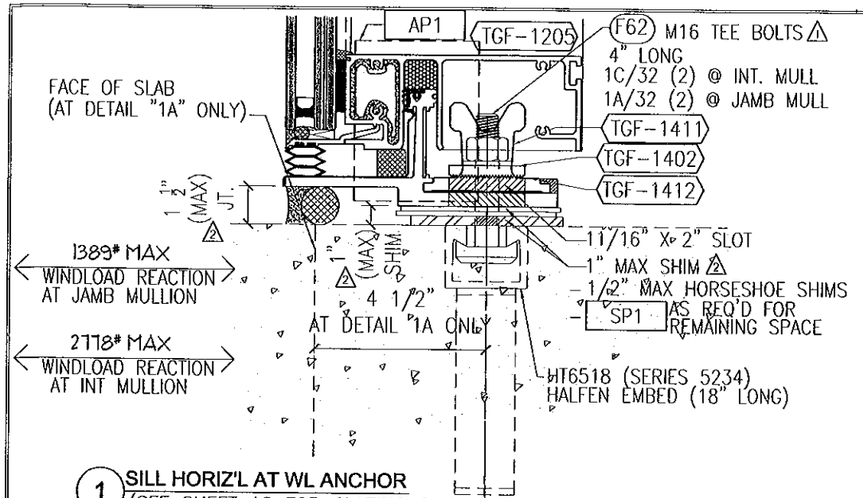

1 **SILL HORIZ'L AT WL ANCHOR**
(SEE SHEET 18 FOR GLAZING OPTIONS
ANCHORED w/ HALFEN EMBED

1A **SILL HORIZ'L AT WL ANCHOR W/ SLAB EDGE**
(SEE SHEET 18 FOR GLAZING OPTIONS
ANCHORED w/ HALFEN EMBED

NOTE:
SEE DETAILS ON SHEET 18
FOR BALANCE OF CURTAINWALL
SILL HORIZONTAL INFORMATION

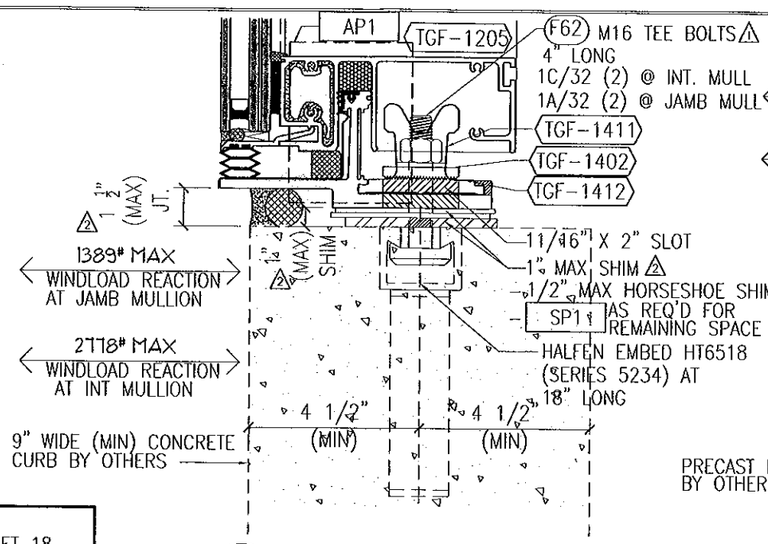

4 **SILL HORIZ'L AT WL ANCHOR**
(SEE SHEET 18 FOR GLAZING OPTIONS
ANCHORED w/ HALFEN EMBED

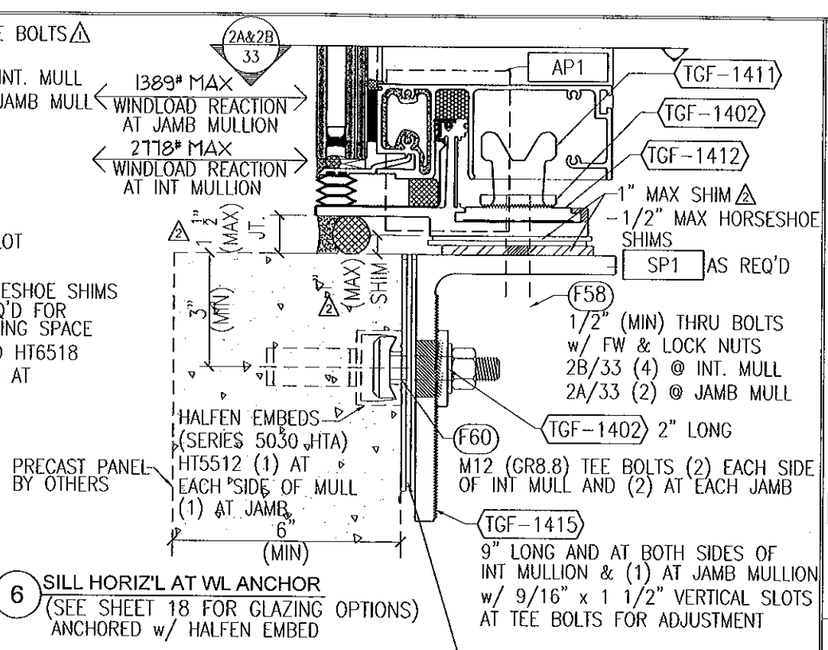

6 **SILL HORIZ'L AT WL ANCHOR**
(SEE SHEET 18 FOR GLAZING OPTIONS)
ANCHORED w/ HALFEN EMBED

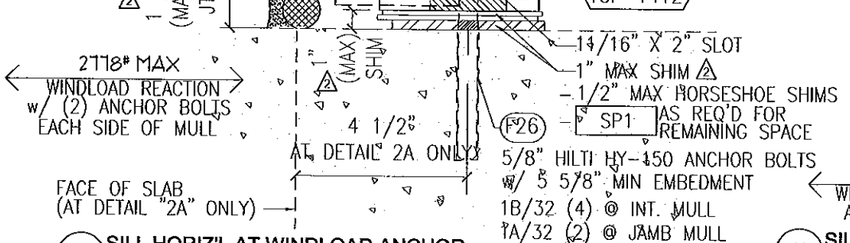

2 **SILL HORIZ'L AT WINDLOAD ANCHOR**
(SEE SHEET 18 FOR GLAZING OPTIONS)
ANCHORED w/ 5/8" EPOXY ANCHOR BOLT

2A **SILL HORIZ'L AT WINDLOAD ANCHOR W/SLAB EDGE**
(SEE SHEET 18 FOR GLAZING OPTIONS)
ANCHORED w/ 5/8" EPOXY ANCHOR BOLT

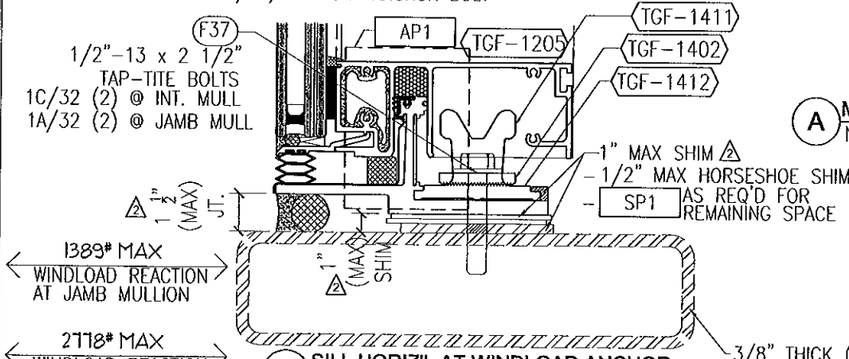

3 **SILL HORIZ'L AT WINDLOAD ANCHOR**
(SEE SHEET 18 FOR GLAZING OPTIONS)
ANCHORED w/ 1/2" TAP-TITE BOLT

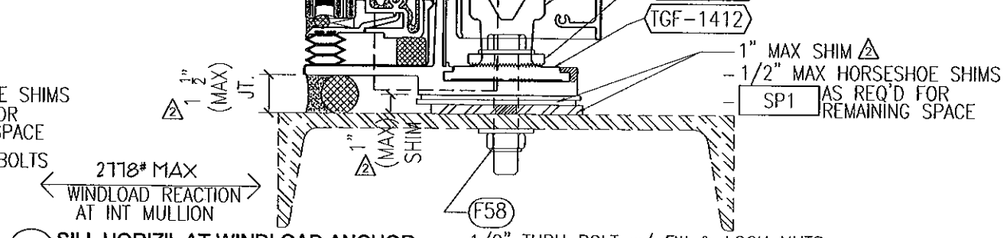

5 **SILL HORIZ'L AT WINDLOAD ANCHOR**
(SEE SHEET 18 FOR GLAZING OPTIONS)
ANCHORED w/ 5/8" THRU BOLT

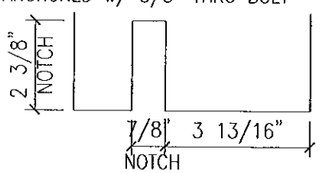

A **MULLION NOTCH AT WL SILLS**
NOTCH AT CHICKEN HEAD OF SILL STARTER

NOTE:
NOTCH BOTTOM OF MULLION
AT CHICKEN HEAD 2 3/8"
DEEP AT ALL WINDLOAD
SILL LOCATIONS

NOTES:

1. SEE DETAILS ON SHEET 18 FOR BALANCE OF CURTAINWALL SILL INFORMATION AND VARIOUS GLAZING OPTIONS
2. INDICATES FASTENERS AND PARTS ARE NOT REQUIRED FOR WINDLOAD ANCHOR CONDITIONS
3. MAX WINDLOAD REACTION = 3412# IF (2) 5/8" EPOXY ANCHOR BOLTS w/ 5 5/8" MIN EMBEDMENT ARE USED ON EACH SIDE OF MULLION – (2) AT JAMB

SA2 = 5" x 8" x 1/2" THICK FORMED STEEL ANGLE (7" LONG)

SP1 = 4" x 4" x 1/4" THICK STEEL PLATES

SP4 = 4 1/2" x 4 1/2" x 3/8" THICK STEEL GUSSET PLATE

FOR MIAMI-DADE CO. B.C.C.O.

Approved as complying with the Florida Building Code
Date 10/20/2011
NOA# 11-0401.03
Miami-Dade Product Control
By

JEFFREY H MARSH LICENSE No 70018 STATE OF FLORIDA PROFESSIONAL ENGINEER
10/4/2011

GLASS COMPANY
1101 13TH STREET WEST RIVIERA BEACH, FLORIDA 33404
PH. (561) 863-7078 FAX (561) 863-7088
www.trainorglass.com
TRAINOR
ILLINOIS FLORIDA GEORGIA NEW JERSEY COLORADO TEXAS ARIZONA VIRGINIA MARYLAND

NO.	DATE	BY	REVISIONS
1	9/14/11	DC	ADDED 11/16" X 2" SLOTS TO ANCHOR BOLT
2	10/4/11	DC	REVISED SHIM AND SHIM HOLES

DESIGN ENGINEERING & CONSULTING Inc.

Date 3-3-11	Scale HALF
Drawing No 4326435	
Drawing Title 90 PSF SMALL MISSILE IMPACT ANCHOR DETAILS	
Sheet No 29 / 44	

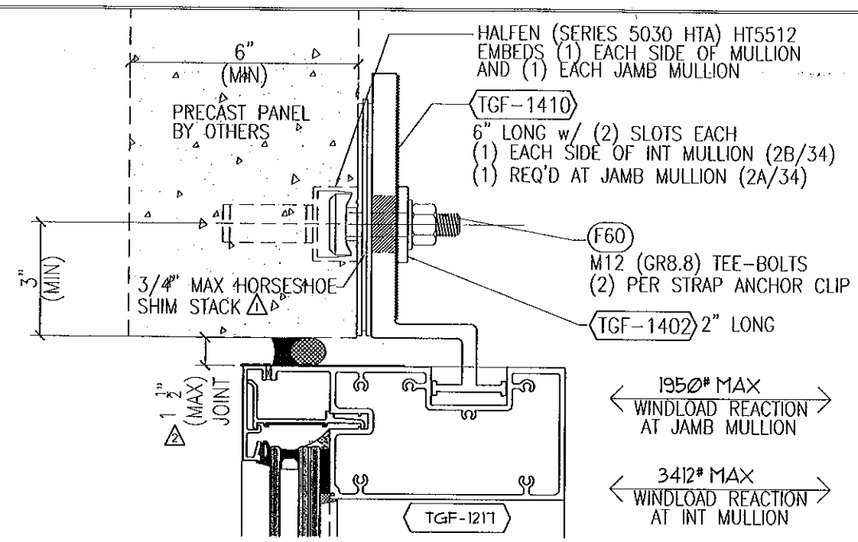

1 **HEAD w/ STRAP ANCHOR**
AT PRECAST PANEL ANCHORED w/ HALFEN EMBED

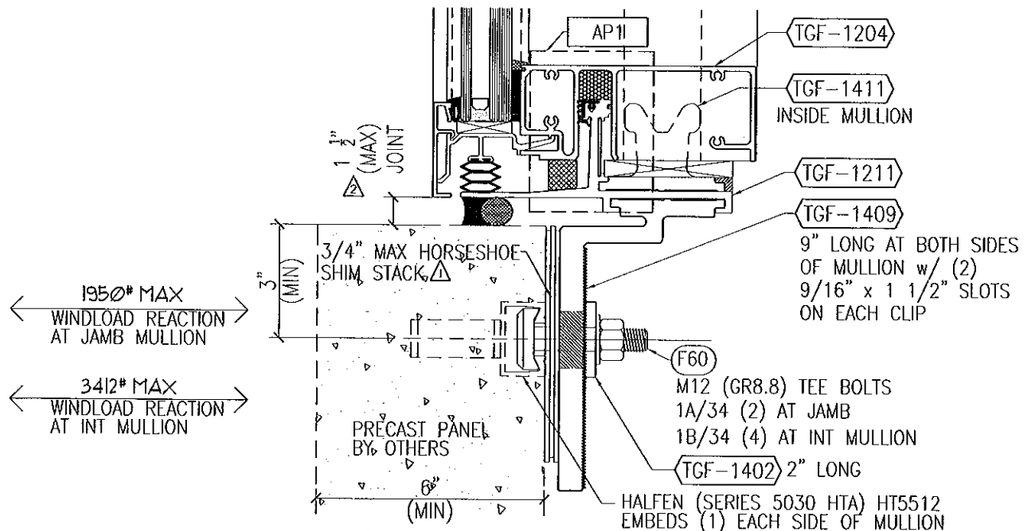

2 **SILL w/ STRAP ANCHOR**
AT PRECAST PANEL ANCHORED w/ HALFEN EMBED

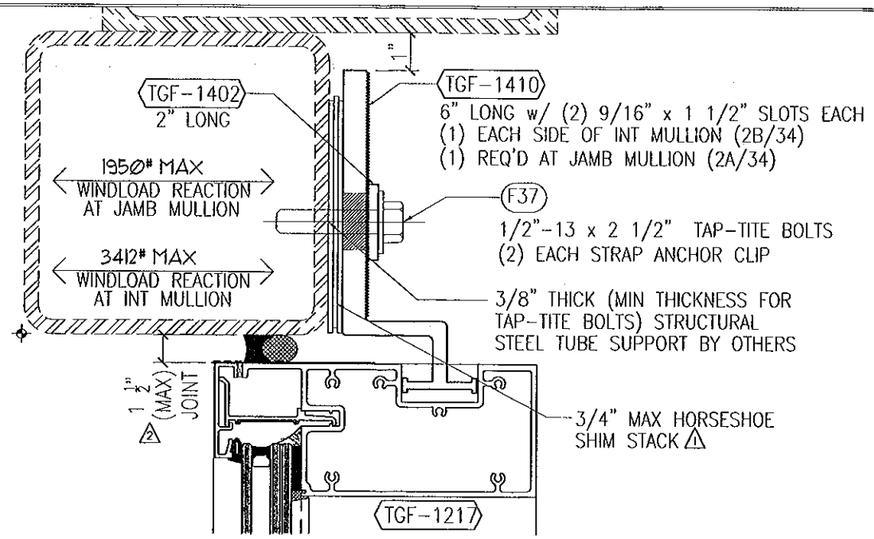

3 **HEAD w/ STRAP ANCHOR**
AT STRUCTURAL STEEL SUPPORT ANCHORED w/ 1/2" TAP-TITE BOLTS

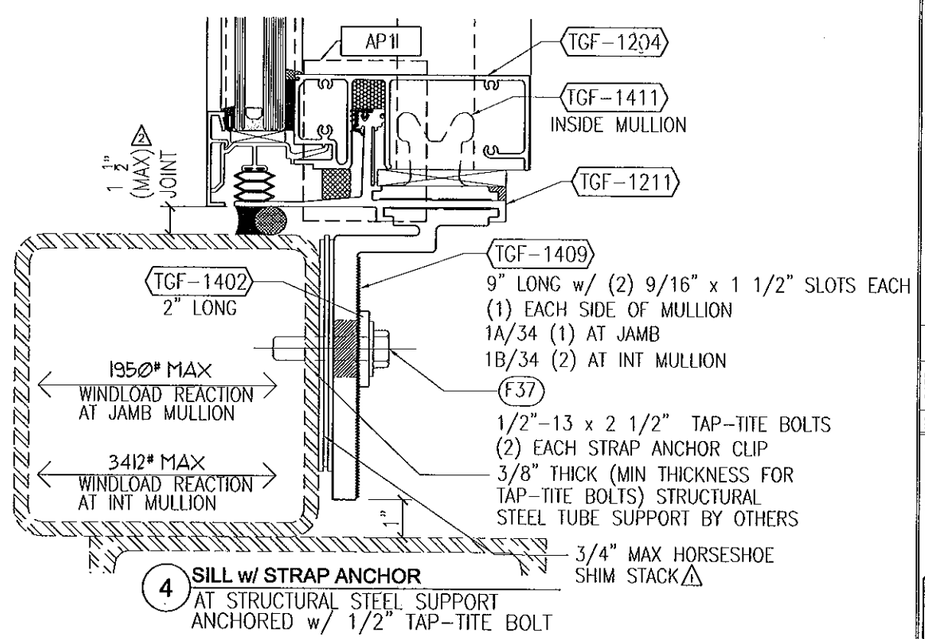

4 **SILL w/ STRAP ANCHOR**
AT STRUCTURAL STEEL SUPPORT ANCHORED w/ 1/2" TAP-TITE BOLT

AP1 = 1/8" x 3 1/4" ALUMINUM END DAM PLATE (2" LONG) AT JAMBS

FOR MIAMI-DADE CO. B.C.C.O.

Approved as complying with the Florida Building Code
Date 10/20/2011
NOA# 11-0A01.03
Miami Dade Product Control
By

JEFFREY H MARSH
LICENSE
No 70018
STATE OF FLORIDA
PROFESSIONAL ENGINEER
10/4/2011

TRAINOR
GLASS COMPANY
1101 13TH STREET WEST RIVIERA BEACH, FLORIDA 33404
PH. (561) 863-7078 FAX (561) 863-7088
www.trainorglass.com
ILLINOIS FLORIDA GEORGIA NEW JERSEY COLORADO TEXAS ARIZONA VIRGINIA MARYLAND

REVISIONS

NO.	DATE	BY	
1	9/14/11	DEC	UPDATED NOTES FOR SHIMS
2	10/04/11	DEC	REVISED MAX JOINT WIDTH AND SHIM NOTES
3			
4			
5			
6			

DESIGN ENGINEERING & CONSULTING
2905 N. COLLINS BLVD. - SUITE 100 RICHARDSON, TEXAS 75080 PH: 972-644-5242 FAX: 972-644-4324

Date	Scale
3-3-11	HALF

Drawing No
4326435

Drawing Title
90 PSF SMALL MISSILE IMPACT ANCHOR DETAILS

Sheet No
30 / 44

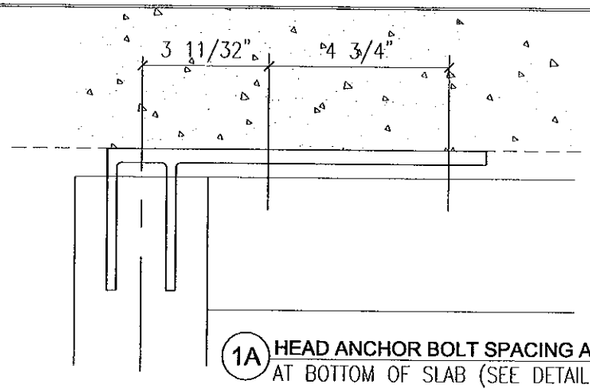

1A HEAD ANCHOR BOLT SPACING AT JAMB (FRONT VIEW)
AT BOTTOM OF SLAB (SEE DETAILS 1 & 7/26)

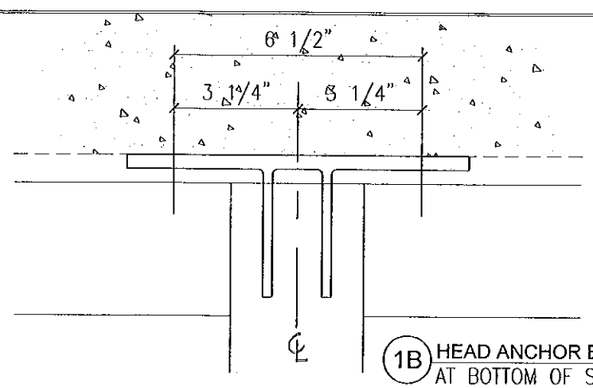

1B HEAD ANCHOR BOLT SPACING AT INT MULLION (FRONT VIEW)
AT BOTTOM OF SLAB (SEE DETAILS 1 & 7/26)

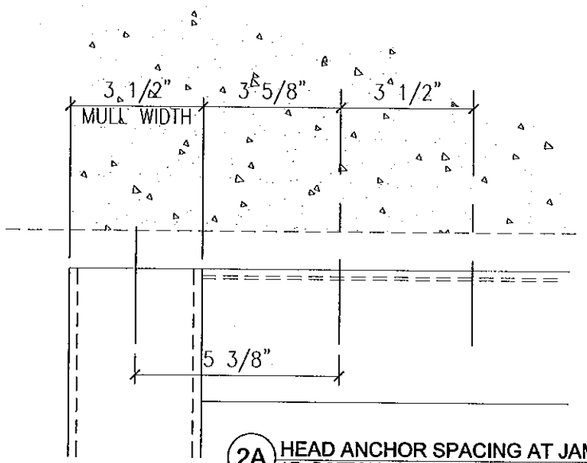

2A HEAD ANCHOR SPACING AT JAMB (FRONT VIEW)
AT BOTTOM OF SLAB (SEE DETAILS 1 & 7/27)

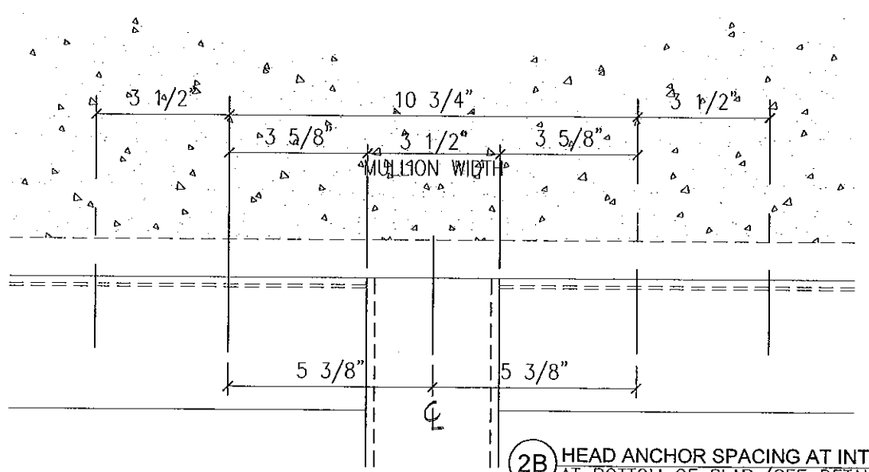

2B HEAD ANCHOR SPACING AT INT MULLION (FRONT VIEW)
AT BOTTOM OF SLAB (SEE DETAILS 1 & 7/27)

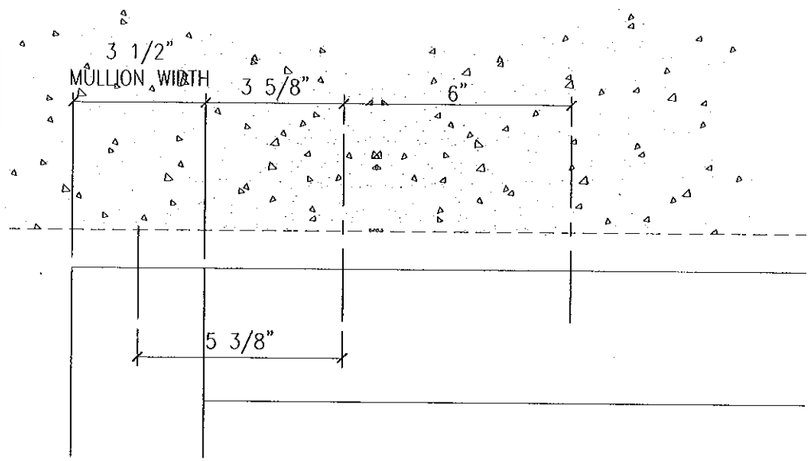

3A HEAD ANCHOR SPACING AT JAMB (FRONT VIEW)
AT BOTTOM OF SLAB (SEE DETAILS 2 & 5/27)

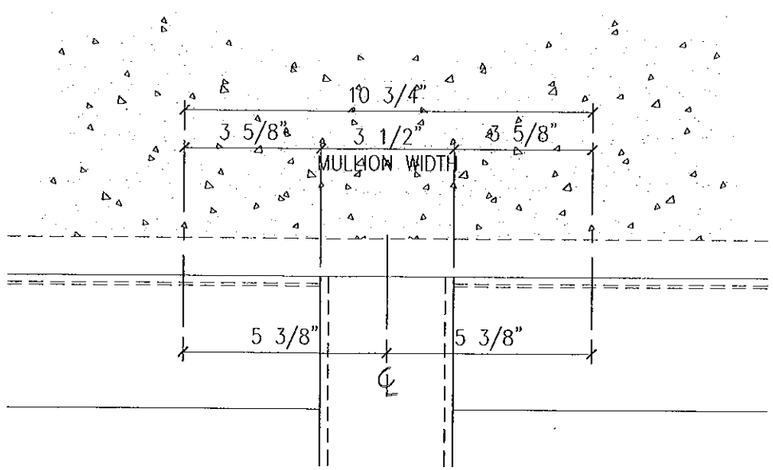

3B HEAD ANCHOR SPACING AT INT MULLION (FRONT VIEW)
AT BOTTOM OF SLAB (SEE DETAILS 2 & 5/27)

FOR MIAMI-DADE CO. B.C.C.O.

Approved as complying with the
Florida Building Code
Date 10/20/2011
NOA# 11-0401.03
Miami Dade Product Control
By

JEFFREY H MARSH
LICENSE
No 70018
STATE OF
FLORIDA
PROFESSIONAL ENGINEER
10/4/2011

GLASS COMPANY
1101 13TH STREET WEST RIVIERA BEACH, FLORIDA 33404
PH. (561) 863-7078 FAX (561) 863-7088
www.trainorglass.com
TRAINOR
ILLINOIS FLORIDA GEORGIA NEW JERSEY COLORADO TEXAS ARIZONA VIRGINIA MARYLAND

REVISIONS

NO.	DATE	BY
1		
2		
3		
4		
5		
6		

DESIGN ENGINEERING & CONSULTING Inc.
3900 N. COLLINS BLVD. - SUITE 100 RICHARDSON, TEXAS 75080
PH: 972-644-6040 FAX: 972-644-6054

Date	Scale
3-3-11	HALF

Drawing No
4326435

Drawing Title
90 PSF
SMALL MISSILE IMPACT
ANCHOR LAYOUTS

Sheet No
31/44

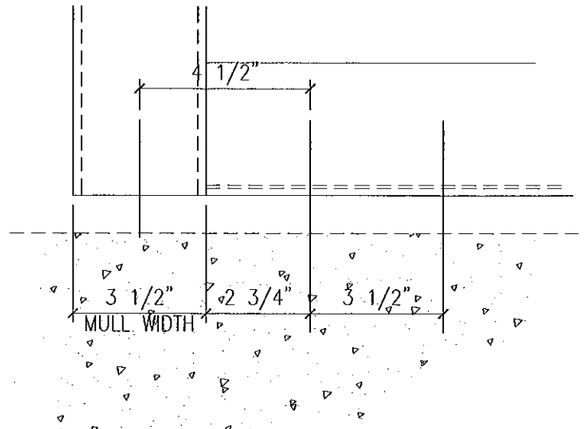

1A SILL ANCHOR SPACING AT JAMB (FRONT VIEW)
AT TOP OF SLAB (SEE DETAILS 2/29)

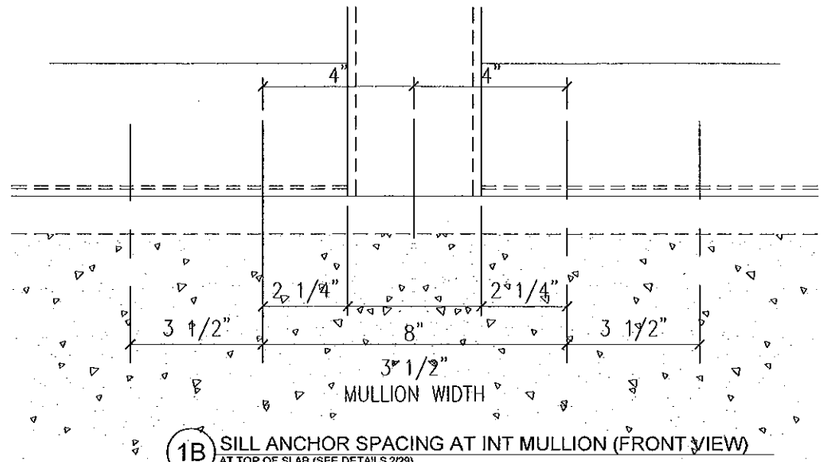

1B SILL ANCHOR SPACING AT INT MULLION (FRONT VIEW)
AT TOP OF SLAB (SEE DETAILS 2/29)

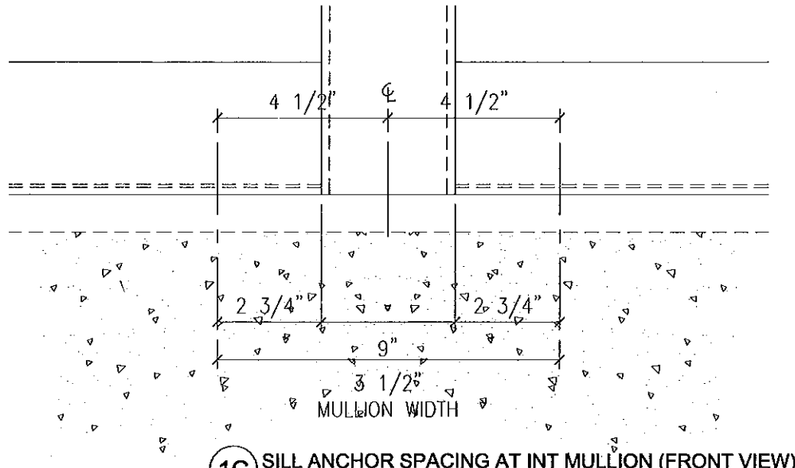

1C SILL ANCHOR SPACING AT INT MULLION (FRONT VIEW)
AT TOP OF SLAB (SEE DETAILS 1, 3, 4 & 5/29)

FOR MIAMI-DADE CO. B.C.C.O.

Approved as complying with the Florida Building Code
Date 10/20/2011
NOA# 11-0401.03
Miami Dade Product Control
By [signature]

JEFFREY H MARSH
LICENSE
No 70018
STATE OF
FLORIDA
PROFESSIONAL ENGINEER
10/4/2011

TRAINOR
GLASS COMPANY
1101 13TH STREET WEST RIVIERA BEACH, FLORIDA 33404
PH. (561) 863-7078 FAX (561) 863-7088
www.trainorglass.com
ILLINOIS FLORIDA GEORGIA NEW JERSEY COLORADO TEXAS ARIZONA VIRGINIA MARYLAND

REVISIONS

NO.	DATE	BY
1		
2		
3		
4		
5		
6		

DESIGN ENGINEERING & CONSULTING
2205 N. COLLINS BLVD. - SUITE 100 PH: 972-644-0640
RICHARDSON, TEXAS 75080 FAX: 972-644-4234

Date	Scale
3-3-11	HALF

Drawing No
4326435

Drawing Title
90 PSF
SMALL MISSILE IMPACT
ANCHOR LAYOUTS

Sheet No
32/44

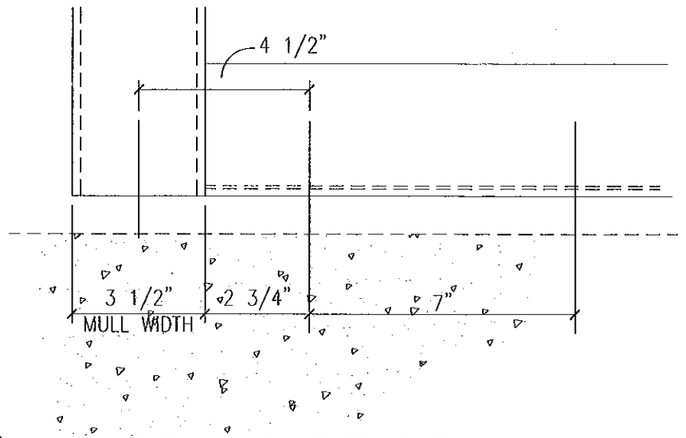

1A SILL ANCHOR SPACING AT JAMB (FRONT VIEW)
AT TOP OF SLAB (SEE DETAILS 2/29)

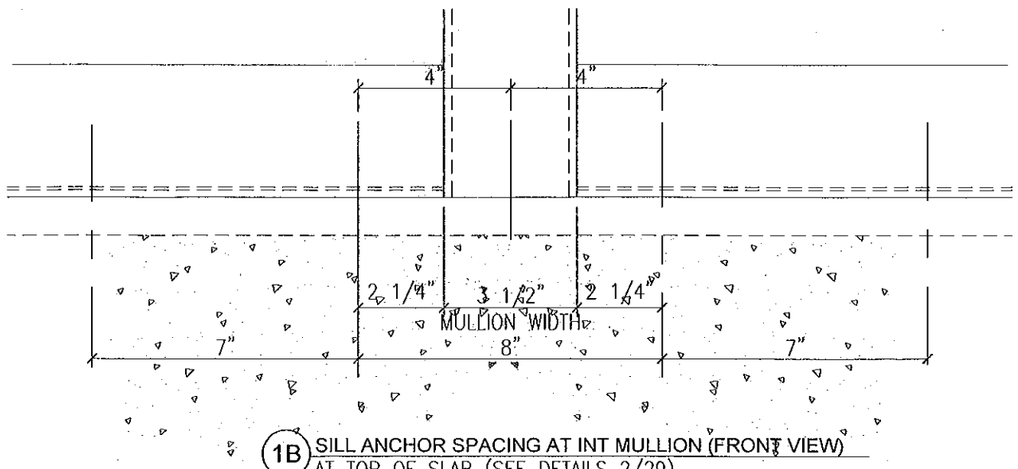

1B SILL ANCHOR SPACING AT INT MULLION (FRONT VIEW)
AT TOP OF SLAB (SEE DETAILS 2/29)

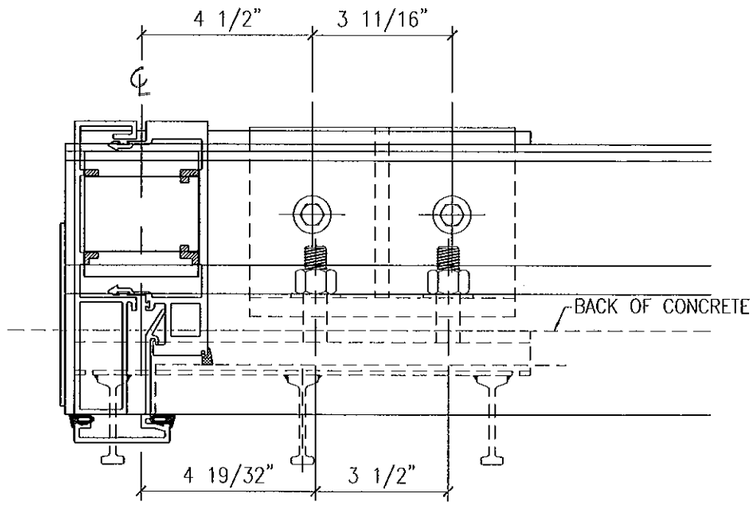

2A SILL ANCHOR SPACING AT JAMB (PLAN VIEW)
AT PRECAST PANEL & ANCHOR CLIPS (SEE DETAILS 6 & 7/28 AND 6 & 7/29)

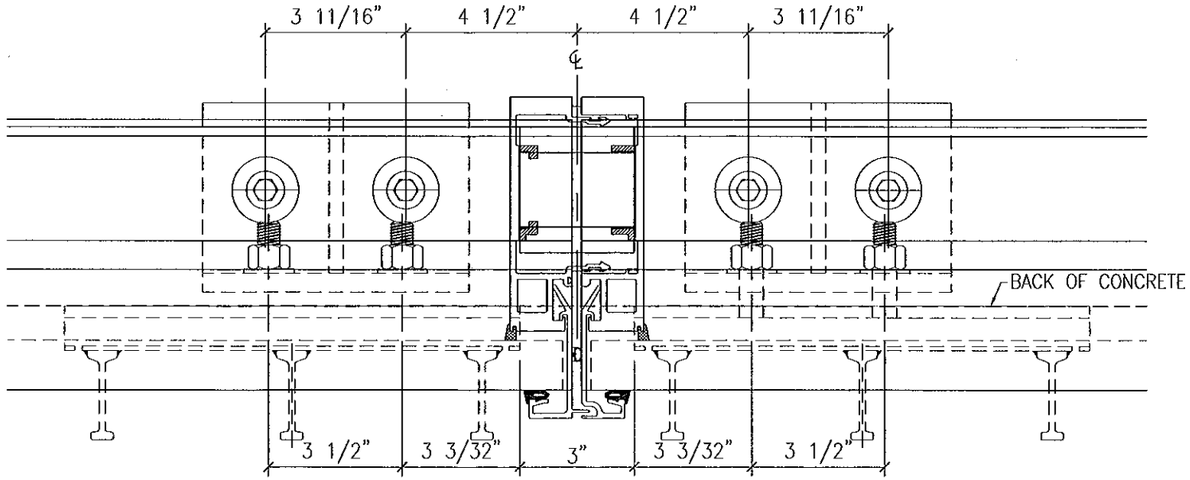

2B SILL ANCHOR AT INT MULL (PLAN VIEW)
AT PRECAST PANEL & ANCHOR CLIPS (SEE DETAILS 6 & 7/28 AND 6 & 7/29)

FOR MIAMI-DADE CO. B.C.C.O.

Approved as complying with the Florida Building Code
Date 10/20/2011
NOA# 11-0401.03
Miami Dade Product Control
By

JEFFREY H MARSH
LICENSE
No 70018
STATE OF FLORIDA
PROFESSIONAL ENGINEER
10/4/2011

TRAINOR
GLASS COMPANY
1101 13TH STREET WEST RIVIERA BEACH, FLORIDA 33404
PH. (561) 863-7078 FAX (561) 863-7088
www.trainorglass.com
ILLINOIS FLORIDA GEORGIA NEW JERSEY COLORADO TEXAS ARIZONA VIRGINIA MARYLAND

REVISIONS

NO.	DATE	BY
1		
2		
3		
4		
5		
6		

DESIGN ENGINEERING & CONSULTING
2265 N. COLLINS BLVD. - SUITE 100 PH: 972-444-2840
RICHARDSON, TEXAS 75080 FAX: 972-444-4234

Date	Scale
3-3-11	QUARTER

Drawing No
4326435

Drawing Title
90 PSF
SMALL MISSILE IMPACT
ANCHOR LAYOUTS

Sheet No
33 / 44

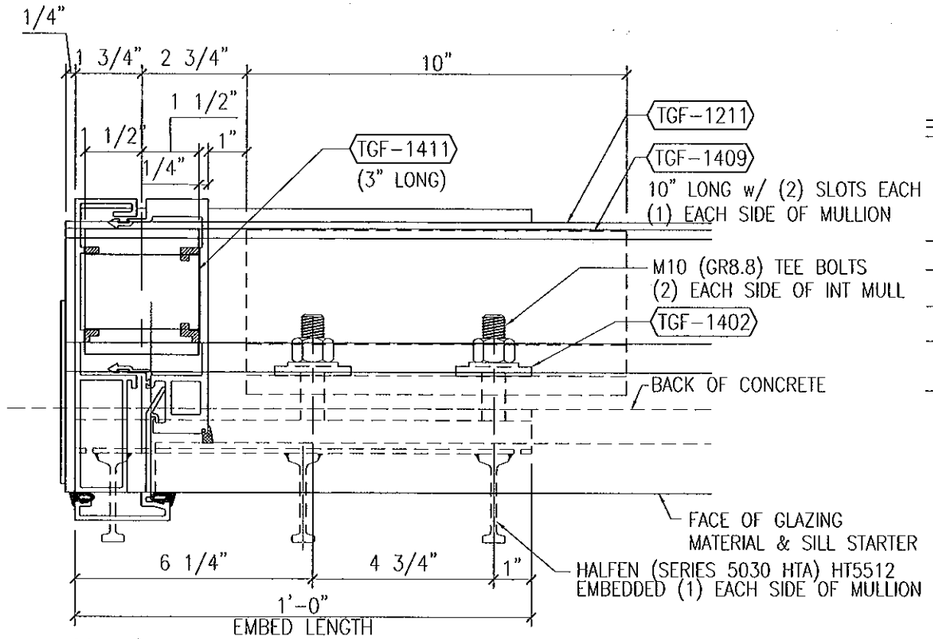

1A SILL STRAP ANCHOR AT JAMB (PLAN VIEW)
AT PRECAST PANEL & STRAP ANCHOR CLIPS (SEE DETAILS 2 & 4/30)
ANCHORED w/ HALFEN EMBED

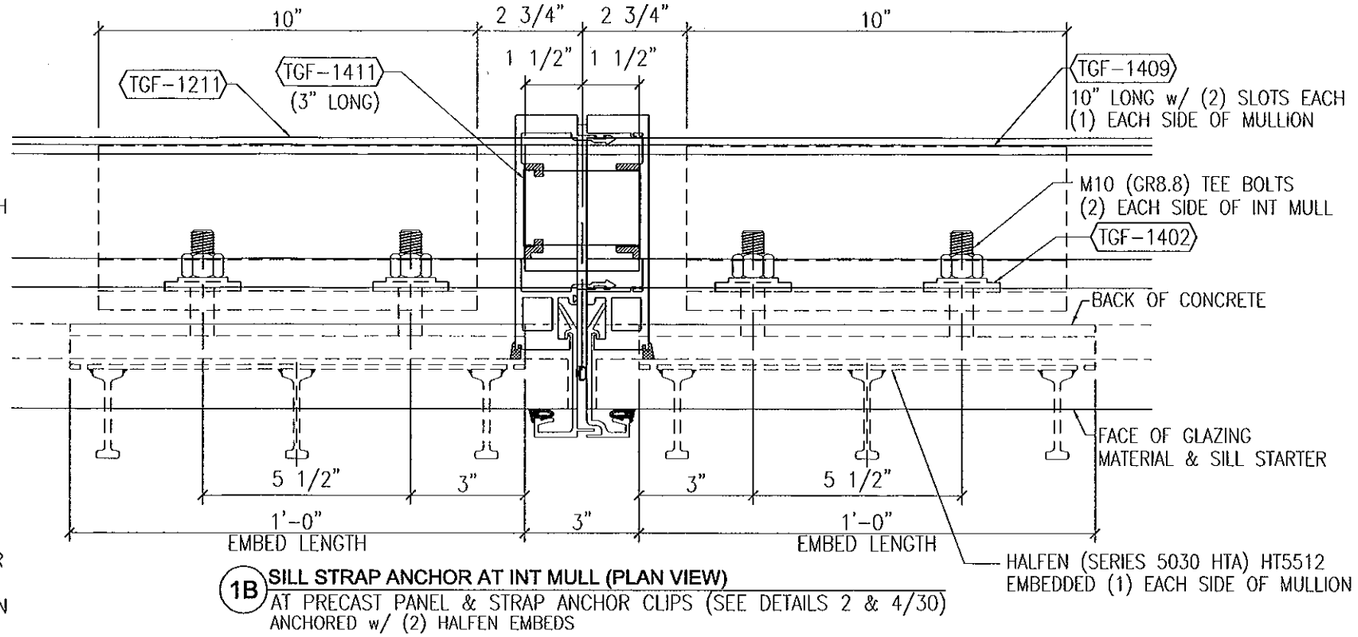

1B SILL STRAP ANCHOR AT INT MULL (PLAN VIEW)
AT PRECAST PANEL & STRAP ANCHOR CLIPS (SEE DETAILS 2 & 4/30)
ANCHORED w/ (2) HALFEN EMBEDS

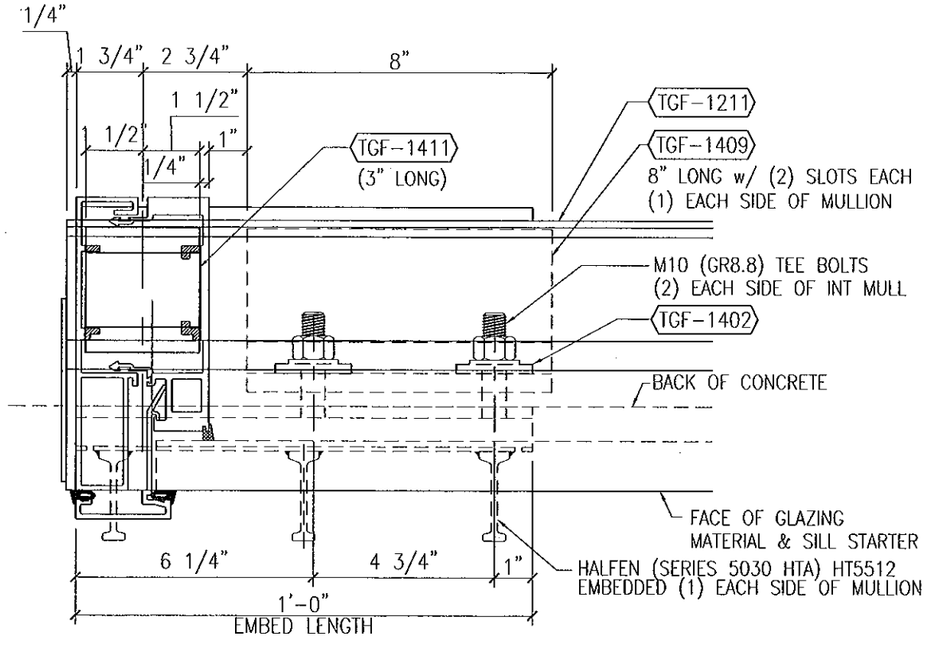

2A HEAD STRAP ANCHOR AT JAMB (PLAN VIEW)
AT PRECAST PANEL & STRAP ANCHOR CLIPS (SEE DETAILS 1 & 3/30)
ANCHORED w/ HALFEN EMBED

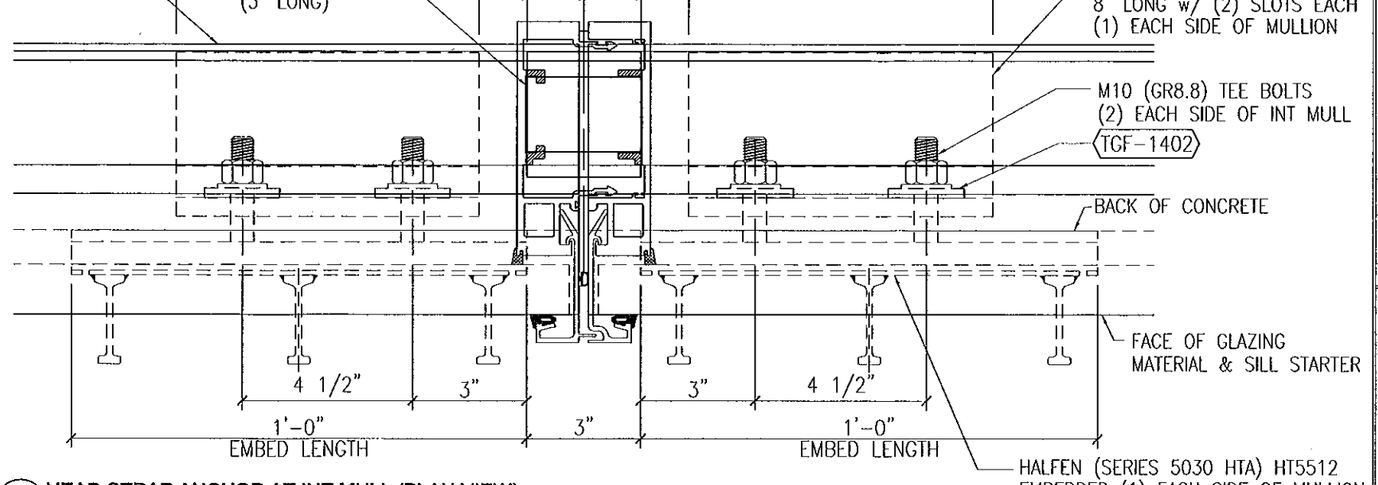

2B HEAD STRAP ANCHOR AT INT MULL (PLAN VIEW)
AT PRECAST PANEL & STRAP ANCHOR CLIPS (SEE DETAILS 1 & 3/30)
ANCHORED w/ (2) HALFEN EMBEDS

FOR MIAMI-DADE CO. B.C.C.O.

Approved as complying with the
Florida Building Code
Date 10/20/2011
NOA# 11-0401.03
Miami Dade Product Control
By

JEFFREY H MARSH
LICENSE
No 70018
STATE OF
FLORIDA
PROFESSIONAL ENGINEER
10/1/2011

GLASS COMPANY
1101 13TH STREET WEST RIVIERA BEACH, FLORIDA 33404
PH. (561) 863-7078 FAX (561) 863-7085
www.trainorglass.com
TRAINOR
ILLINOIS FLORIDA GEORGIA NEW JERSEY COLORADO TEXAS ARIZONA VIRGINIA MARYLAND

NO.	DATE	BY
REVISIONS		

DESIGN ENGINEERING & CONSULTING

Date	Scale
3-3-11	QUARTER

Drawing No
4326435

Drawing Title
90 PSF
SMALL MISSILE IMPACT
ANCHOR LAYOUTS

Sheet No
34 / 44

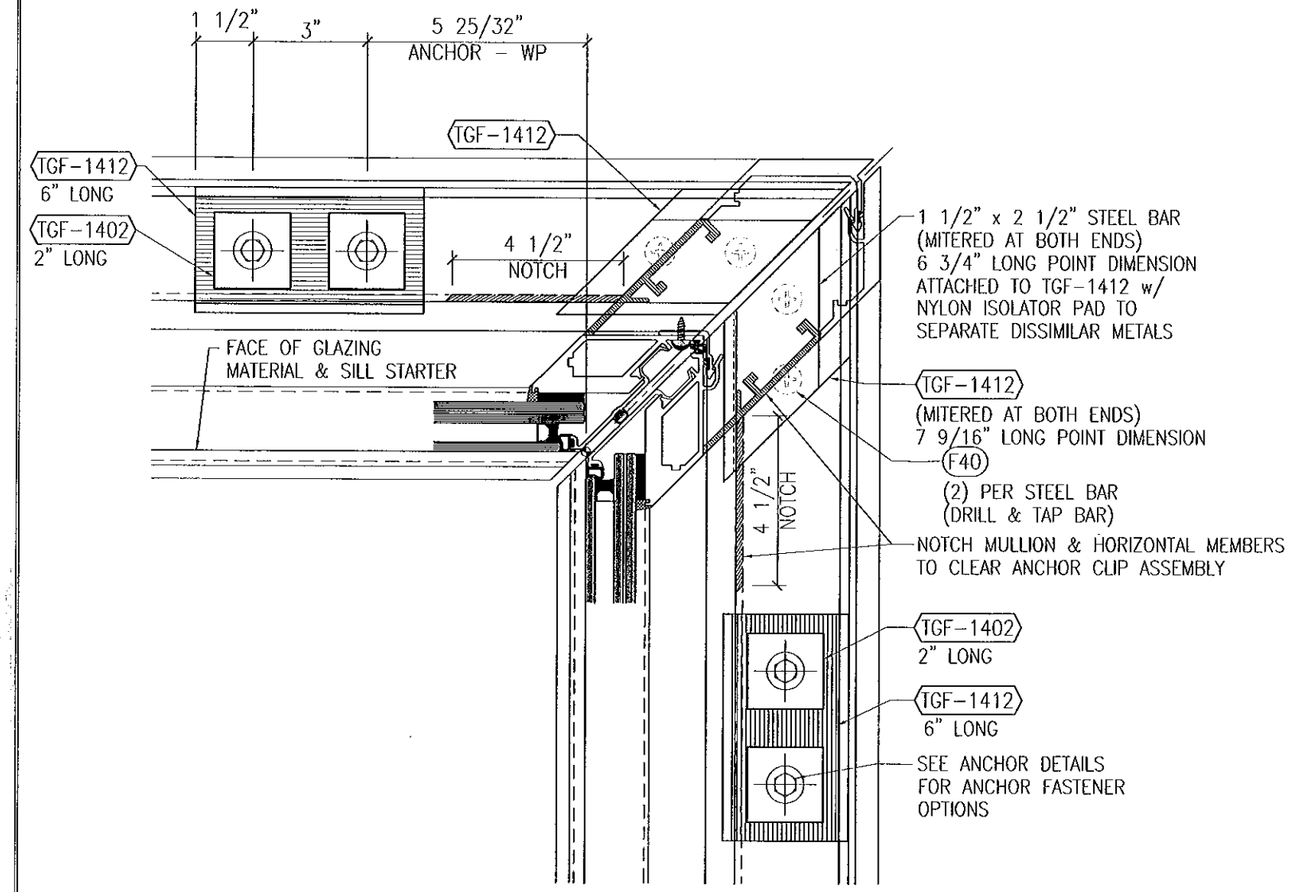

1 SILL ANCHOR AT INSIDE CORNER MULL (PLAN VIEW)
AT SINGLE-SPAN & MULTI-SPAN SILLS

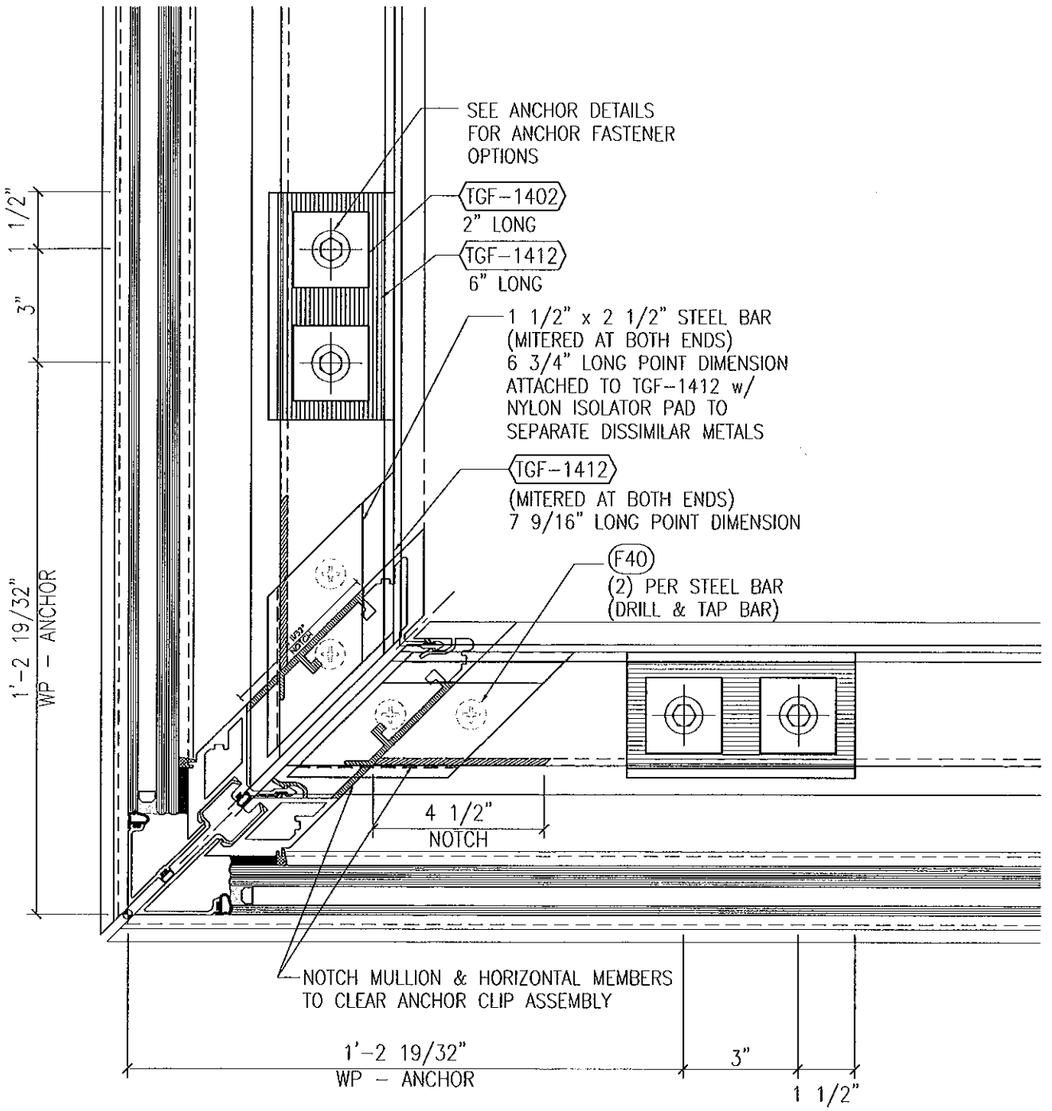

2 SILL ANCHOR AT OUTSIDE CORNER MULL (PLAN VIEW)
AT SINGLE-SPAN & MULTI-SPAN SILLS

FOR MIAMI-DADE CO. B.C.C.O.

Approved as complying with the
Florida Building Code
Date 10/20/2011
NOA# 11-0401.03
Miami-Dade Product Control
By

JEFFREY H MARSH
LICENSE
No 70018
STATE OF
FLORIDA
PROFESSIONAL ENGINEER
10/4/2011

TRAINOR
GLASS COMPANY
1101 13TH STREET WEST RIVIERA BEACH, FLORIDA 33404
PH. (561) 863-7078 FAX (561) 863-7088
www.trainorglass.com
ILLINOIS FLORIDA GEORGIA NEW JERSEY COLORADO TEXAS ARIZONA VIRGINIA MARYLAND

REVISIONS

NO.	DATE	BY
1		
2		
3		
4		
5		
6		

DESIGN ENGINEERING & CONSULTING

Date	Scale
3-3-11	QUARTER

Drawing No
4326435

Drawing Title
90 PSF
SMALL MISSILE IMPACT
ANCHOR LAYOUTS

Sheet No
35 / 44

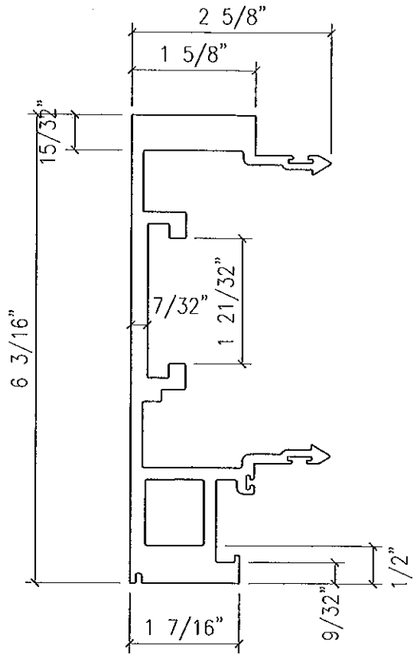

EXTRUSION NO:	TGF-1101
DESCRIPTION:	MALE MULLION
Ixx	16.527
Sxx	5.299
ALLOY	6063-T6

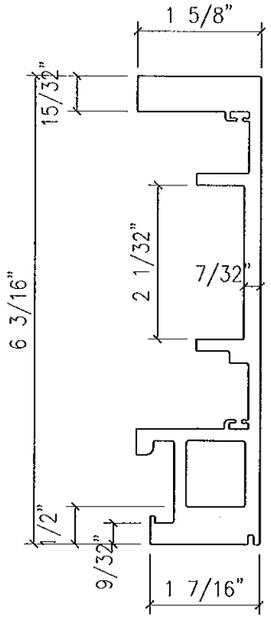

EXTRUSION NO:	TGF-1102
DESCRIPTION:	FEMALE MULLION
Ixx	15.478
Sxx	4.865
ALLOY	6063-T6

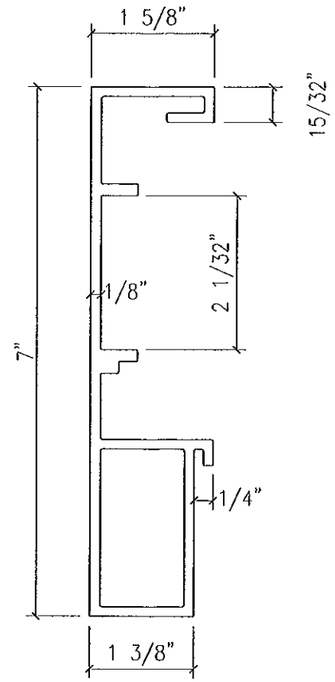

EXTRUSION NO:	TGF-1103
DESCRIPTION:	JAMB MULLION (FOR 9/16" GLAZING)
Ixx	.
Sxx	.
ALLOY	6063-T6

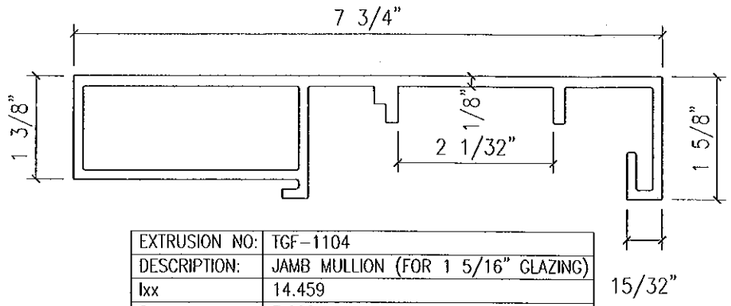

EXTRUSION NO:	TGF-1104
DESCRIPTION:	JAMB MULLION (FOR 1 5/16" GLAZING)
Ixx	14.459
Sxx	3.608
ALLOY	6063-T6

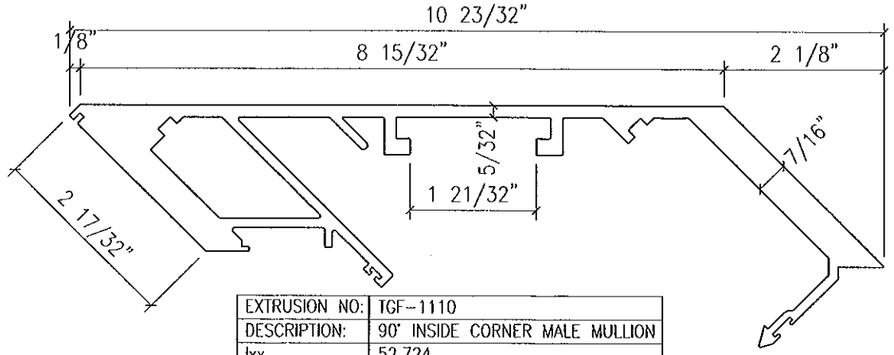

EXTRUSION NO:	TGF-1110
DESCRIPTION:	90° INSIDE CORNER MALE MULLION
Ixx	52.724
Sxx	9.210
ALLOY	6063-T6

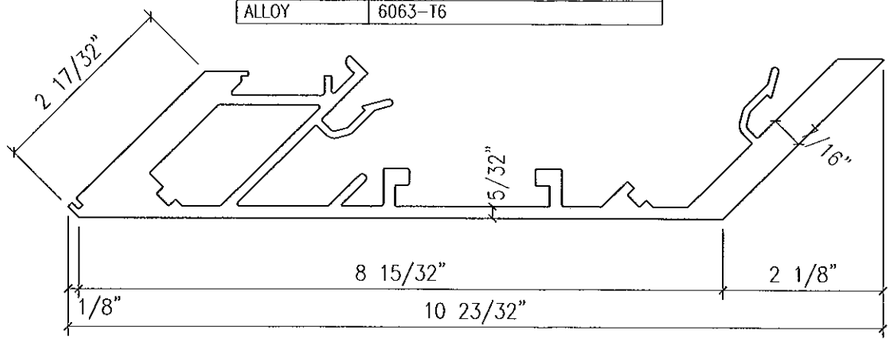

EXTRUSION NO:	TGF-1111
DESCRIPTION:	90° INSIDE CORNER FEMALE MULLION
Ixx	51.199
Sxx	8.850
ALLOY	6063-T6

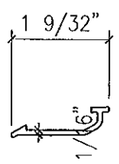

EXTRUSION NO:	TGF-1114
DESCRIPTION:	ANTI BUCKLING CLIP
Ixx	0.001
Sxx	0.005
ALLOY	6063-T6

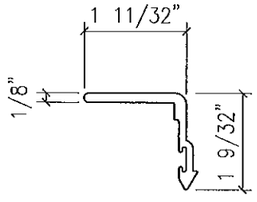

EXTRUSION NO:	TGF-1115
DESCRIPTION:	90° I.S. CORNER ANTI BUCKLING CLIP
Ixx	0.049
Sxx	0.053
ALLOY	6063-T6

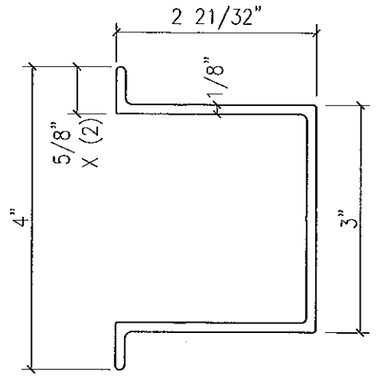

EXTRUSION NO:	TGF-1116
DESCRIPTION:	JAMB CONNECTION CLIP
Ixx	1.964
Sxx	0.982
ALLOY	6063-T6

FOR MIAMI-DADE CO. B.C.C.O.

Approved as complying with the Florida Building Code
Date 10/20/2011
NOA# 11-0401.03
Miami-Dade Product Control
By

JEFFREY H MARSH
LICENSE
No 70018
STATE OF FLORIDA
PROFESSIONAL ENGINEER
10/4/2011

GLASS COMPANY
1101 13TH STREET WEST RIVIERA BEACH, FLORIDA 33404
PH. (561) 863-7078 FAX (561) 863-7088
www.trainorglass.com
TRAINOR
ILLINOIS FLORIDA GEORGIA NEW JERSEY COLORADO TEXAS ARIZONA VIRGINIA MARYLAND

REVISIONS

NO.	DATE	BY
1		
2		
3		
4		
5		
6		

DESIGN ENGINEERING & CONSULTING
2306 N. COLLINS BLVD. • SUITE 100 PH: 972-644-4640
RICHARDSON, TEXAS 75080 FAX: 972-644-4264

Date	Scale
3-3-11	HALF

Drawing No
4326435

Drawing Title
90 PSF
SMALL MISSILE IMPACT
EXTRUSIONS

Sheet No
36 / 44

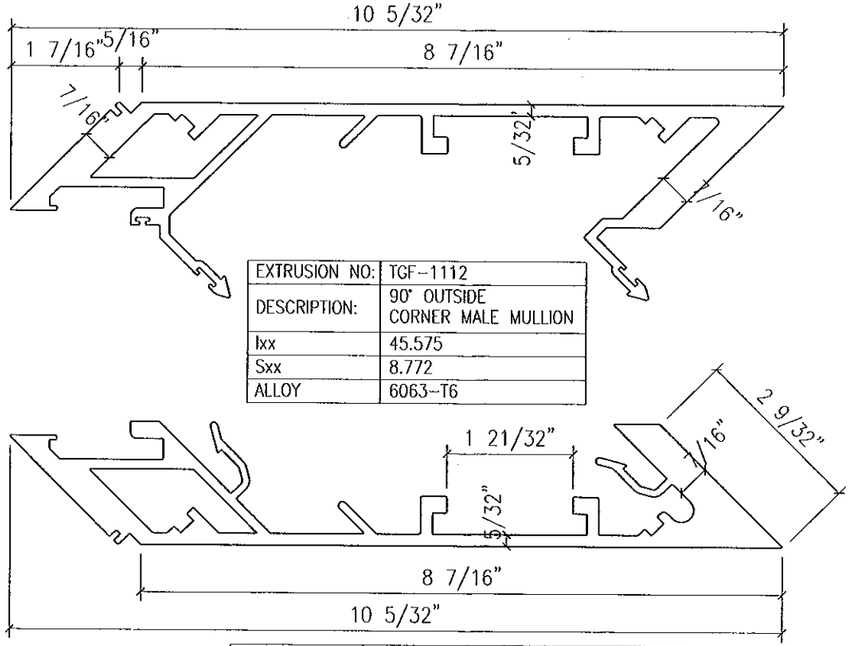

EXTRUSION NO:	TGF-1112
DESCRIPTION:	90° OUTSIDE CORNER MALE MULLION
Ixx	45.575
Sxx	8.772
ALLOY	6063-T6

EXTRUSION NO:	TGF-1113
DESCRIPTION:	90° OUTSIDE CORNER FEMALE MULLION
Ixx	46.015
Sxx	8.702
ALLOY	6063-T6

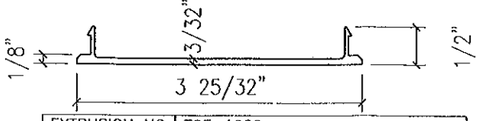

EXTRUSION NO:	TGF-1202
DESCRIPTION:	HEAD HORIZONTAL FILLER
Ixx	0.525
Sxx	0.278
ALLOY	6063-T5

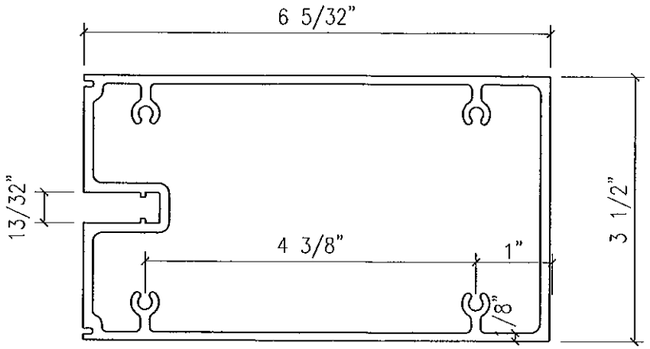

EXTRUSION NO:	TGF-1203
DESCRIPTION:	3 1/2" INT HORIZONTAL
Ixx	15.478
Sxx	4.680
ALLOY	6063-T6

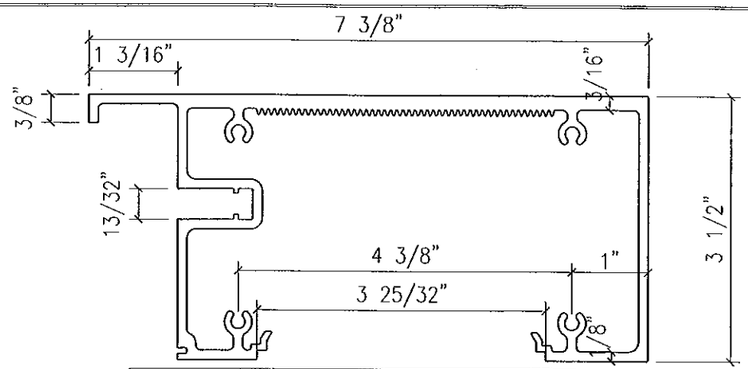

EXTRUSION NO:	TGF-1201
DESCRIPTION:	HEAD HORIZONTAL (1 5/16" INFILLS)
Ixx	19.482
Sxx	4.641
ALLOY	6063-T6

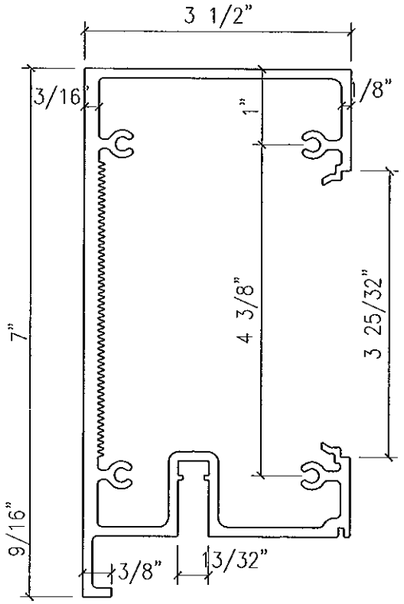

EXTRUSION NO:	TGF-1221
DESCRIPTION:	HEAD HORIZONTAL (9/16" INFILLS)
Ixx	.
Sxx	.
ALLOY	6063-T6

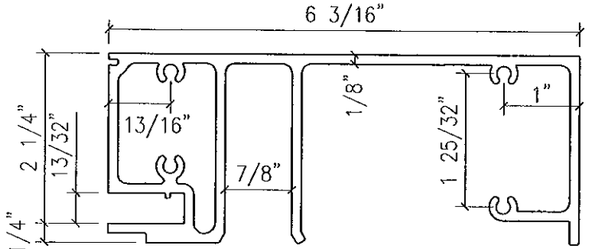

EXTRUSION NO:	TGF-1204
DESCRIPTION:	STACK HORIZONTAL SILL
Ixx	12.536
Sxx	3.596
ALLOY	6063-T6

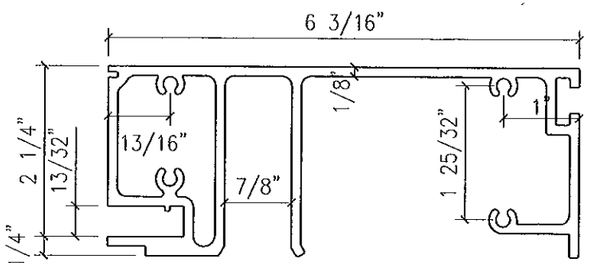

EXTRUSION NO:	TGF-1205
DESCRIPTION:	STACK HORIZ'L SILL w/ STOOL TRIM POCKET
Ixx	12.536
Sxx	3.596
ALLOY	6063-T6

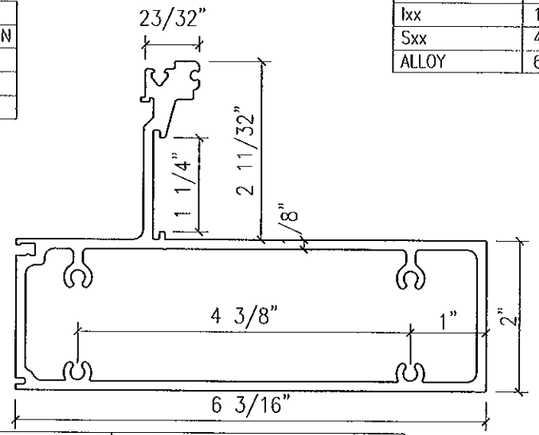

EXTRUSION NO:	TGF-1206
DESCRIPTION:	EXPANSION HORIZONTAL GUTTER
Ixx	11.170
Sxx	3.323
ALLOY	6063-T6

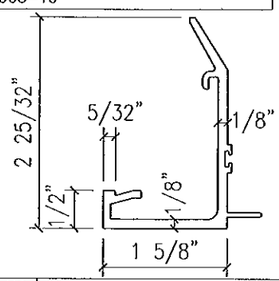

EXTRUSION NO:	TGF-1368
DESCRIPTION:	3 1/2" MALE FACE CAP (9/16" GLAZING)
Ixx	.
Sxx	.
ALLOY	6063-T5

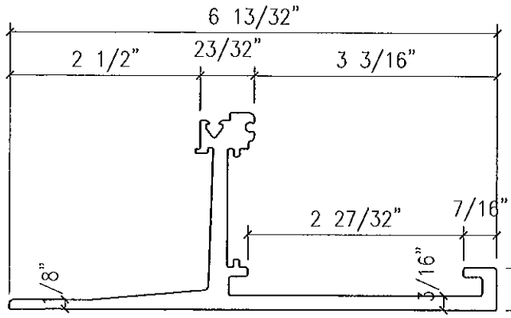

EXTRUSION NO:	TGF-1210
DESCRIPTION:	LIGHT SILL STARTER FOR 9/16" GLASS
Ixx	.
Sxx	.
ALLOY	6063-T6

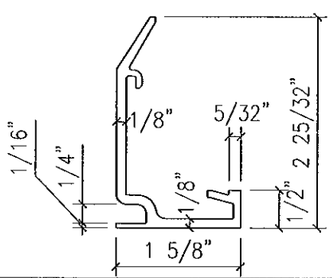

EXTRUSION NO:	TGF-1369
DESCRIPTION:	3 1/2" FEMALE FACE CAP (9/16" GLAZING)
Ixx	.
Sxx	.
ALLOY	6063-T5

FOR MIAMI-DADE CO. B.C.C.O.

Approved as complying with the Florida Building Code
Date 10/20/2011
NOA# 11-0401.03
Miami-Dade Product Control
By

JEFFREY H MARSH
LICENSE
No 70018
STATE OF
FLORIDA
PROFESSIONAL ENGINEER
10/4/2011

GLASS COMPANY
1101 13TH STREET WEST RIVIERA BEACH, FLORIDA 33404
PH. (561) 863-7078 FAX (561) 863-7088
www.trainorglass.com
TRAINOR
ILLINOIS FLORIDA GEORGIA NEW JERSEY COLORADO TEXAS ARIZONA VIRGINIA MARYLAND

REVISIONS

NO.	DATE	BY
1	-	-
2	-	-
3	-	-
4	-	-
5	-	-
6	-	-

DESIGN ENGINEERING & CONSULTING Inc.
2295 N. COLLINS BLVD., SUITE 100 RICHARDSON, TEXAS 75080
PH: 972-644-1540 FAX: 972-644-1554

Date	Scale
3-3-11	HALF

Drawing No
4326435

Drawing Title
90 PSF SMALL MISSILE IMPACT EXTRUSIONS

Sheet No
37 / 44

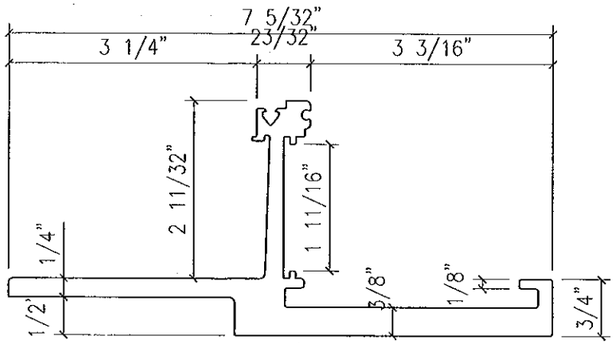

EXTRUSION NO:	TGF-1207
DESCRIPTION:	HEAVY SILL STARTER FOR 1 5/16" GLASS
Ixx	.
Sxx	.
ALLOY	6063-T6

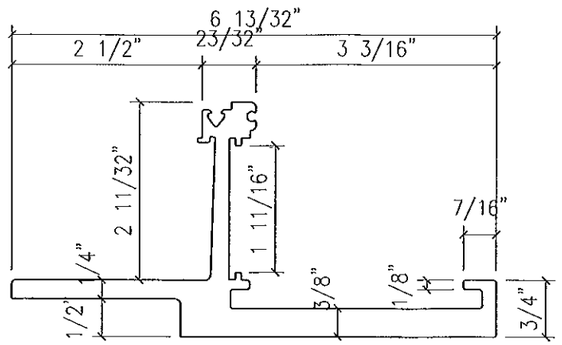

EXTRUSION NO:	TGF-1208
DESCRIPTION:	HEAVY SILL STARTER FOR 9/16" GLASS
Ixx	.
Sxx	.
ALLOY	6063-T6

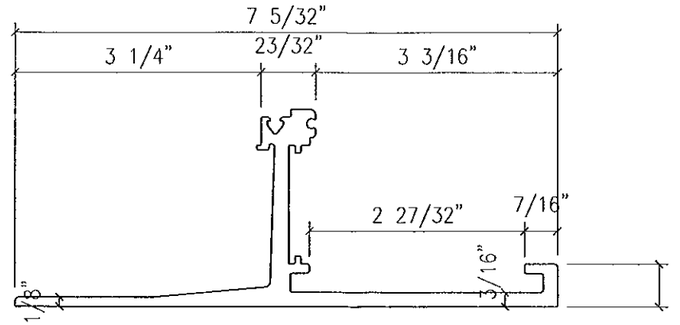

EXTRUSION NO:	TGF-1209
DESCRIPTION:	LIGHT SILL STARTER FOR 1 5/16" GLASS
Ixx	.
Sxx	.
ALLOY	6063-T6

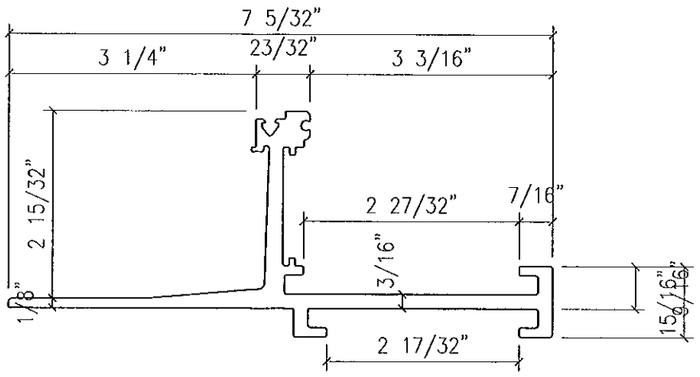

EXTRUSION NO:	TGF-1211
DESCRIPTION:	SILL STARTER FOR 1 5/16" GLASS AT STRAP ANCHOR
Ixx	.
Sxx	.
ALLOY	6063-T6

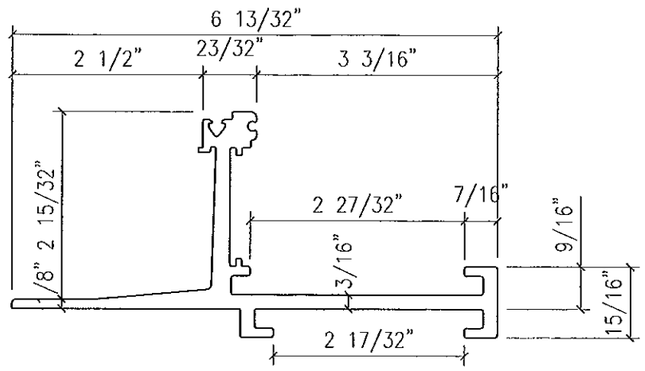

EXTRUSION NO:	TGF-1212
DESCRIPTION:	SILL STARTER FOR 9/16" GLASS AT STRAP ANCHOR
Ixx	.
Sxx	.
ALLOY	6063-T6

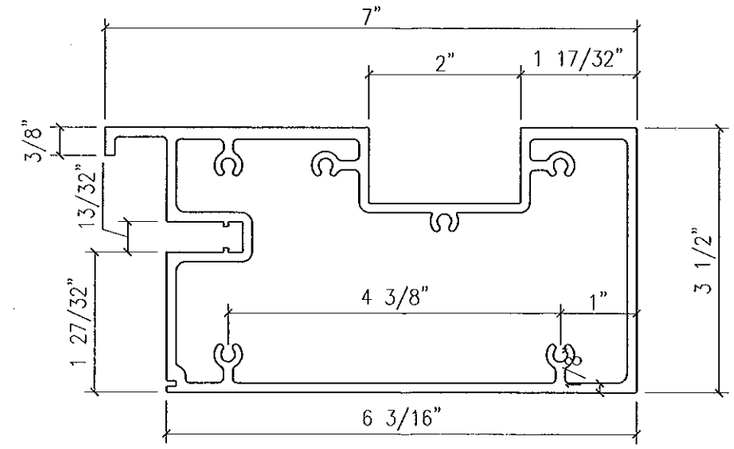

EXTRUSION NO:	TGF-1216
DESCRIPTION:	HEAD HORIZ'L FOR 9/16" GLASS w/ STRAP ANCHOR
Ixx	.
Sxx	.
ALLOY	6063-T6

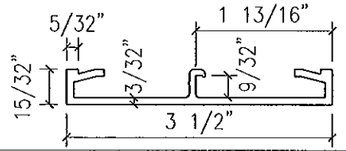

EXTRUSION NO:	TGF-1332
DESCRIPTION:	3 1/2" INT HORIZ FACE CAP
Ixx	.
Sxx	.
ALLOY	6063-T5

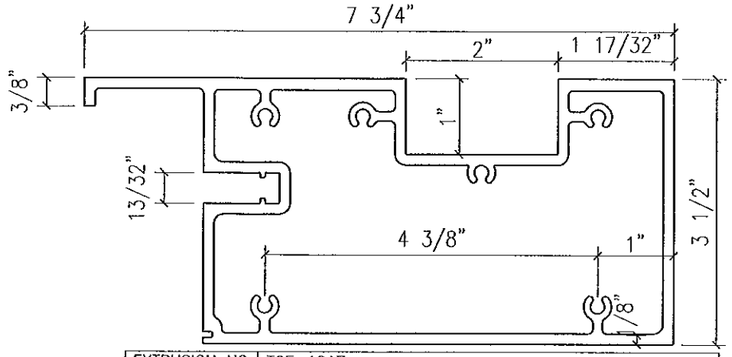

EXTRUSION NO:	TGF-1217
DESCRIPTION:	HEAD HORIZ'L FOR 1 5/16" GLASS w/ STRAP ANCHOR
Ixx	11.170
Sxx	3.323
ALLOY	6063-T6

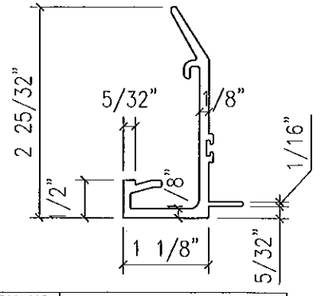

EXTRUSION NO:	TGF-1301
DESCRIPTION:	2 1/2" MALE FACE CAP FOR (9/16" GLAZING)
Ixx	.
Sxx	.
ALLOY	6063-T5

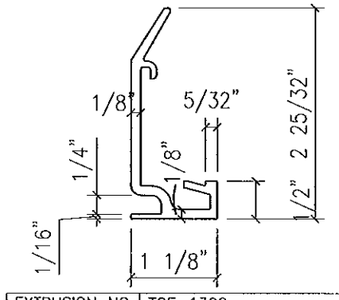

EXTRUSION NO:	TGF-1302
DESCRIPTION:	2 1/2" FEMALE FACE CAP FOR (9/16" GLAZING)
Ixx	.
Sxx	.
ALLOY	6063-T5

FOR MIAMI-DADE CO. B.C.C.O.

Approved as complying with the Florida Building Code
Date 10/20/2011
NOA# 11-0401.03
Miami Dade Product Control
By

JEFFREY H MARSH
LICENSE
No 70018
STATE OF
FLORIDA
PROFESSIONAL ENGINEER
10/4/2011

GLASS COMPANY
1101 13TH STREET WEST RIVIERA BEACH, FLORIDA 33404
PH. (561) 863-7078 FAX (561) 863-7088
www.trainorglass.com
TRAINOR
ILLINOIS FLORIDA GEORGIA NEW JERSEY COLORADO TEXAS ARIZONA VIRGINIA MARYLAND

REVISIONS

NO.	DATE	BY

DESIGN ENGINEERING & CONSULTING Inc
FL# 875-944-4844
TX# 876-944-4844
2200 N. COLLINS BLVD., SUITE 130
RICHARDSON, TEXAS 75080

Date	Scale
3-3-11	HALF

Drawing No
4326435

Drawing Title
90 PSF
SMALL MISSILE IMPACT
EXTRUSIONS

Sheet No
38 / 44

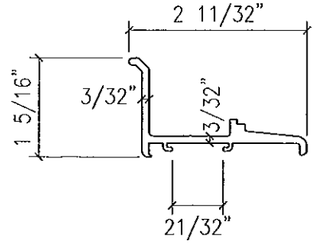

EXTRUSION NO:	TGF-1303
DESCRIPTION:	GLAZING ADAPTER FOR (9/16" CAPTURED HEAD)
Ixx	.
Sxx	.
ALLOY	6063-T5

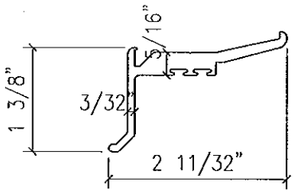

EXTRUSION NO:	TGF-1304
DESCRIPTION:	GLAZING ADAPTER FOR (9/16" CAPTURED STACK HORIZ)
Ixx	.
Sxx	.
ALLOY	6063-T5

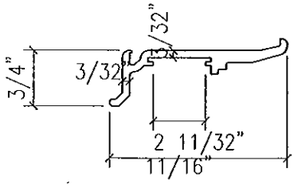

EXTRUSION NO:	TGF-1305
DESCRIPTION:	GLAZING ADAPTER FOR (9/16" CAPTURED INT HORIZ)
Ixx	.
Sxx	.
ALLOY	6063-T5

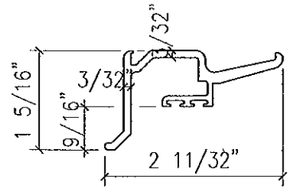

EXTRUSION NO:	TGF-1306
DESCRIPTION:	GLAZING ADAPTER FOR (9/16" CAPTURED RIBBON SILL STARTER)
Ixx	.
Sxx	.
ALLOY	6063-T5

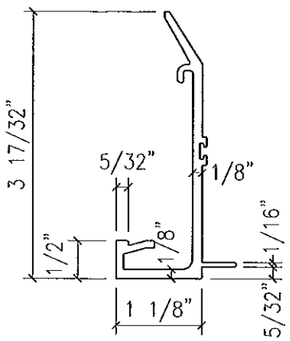

EXTRUSION NO:	TGF-1311
DESCRIPTION:	2 1/2" MALE FACE CAP FOR (1 5/16" GLAZING)
Ixx	.
Sxx	.
ALLOY	6063-T5

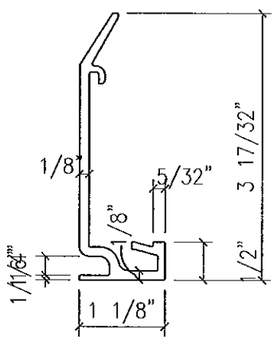

EXTRUSION NO:	TGF-1312
DESCRIPTION:	2 1/2" FEMALE FACE CAP FOR (1 5/16" GLAZING)
Ixx	.
Sxx	.
ALLOY	6063-T5

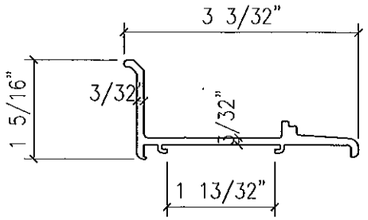

EXTRUSION NO:	TGF-1313
DESCRIPTION:	GLAZING ADAPTER (1 5/16" CAPTURED HEAD)
Ixx	.
Sxx	.
ALLOY	6063-T5

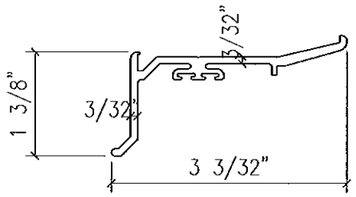

EXTRUSION NO:	TGF-1314
DESCRIPTION:	GLAZING ADAPTER FOR (1 5/16" CAPTURED STACK HORIZ)
Ixx	.
Sxx	.
ALLOY	6063-T5

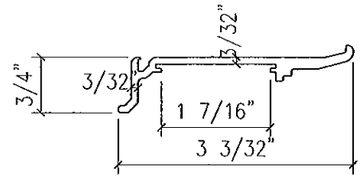

EXTRUSION NO:	TGF-1315
DESCRIPTION:	GLAZING ADAPTER FOR (1 5/16" CAPTURED INT HORIZ)
Ixx	.
Sxx	.
ALLOY	6063-T5

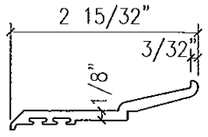

EXTRUSION NO:	TGF-1317
DESCRIPTION:	GLAZING ADAPTER FOR (1 5/16" SSG STACK HORIZ)
Ixx	.
Sxx	.
ALLOY	6063-T5

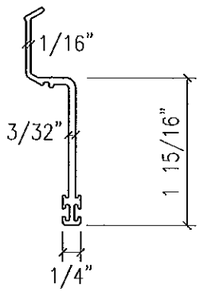

EXTRUSION NO:	TGF-1318
DESCRIPTION:	SSG VERTICAL GLAZING FIN (1 5/16")
Ixx	.
Sxx	.
ALLOY	6063-T5

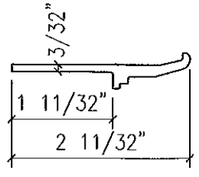

EXTRUSION NO:	TGF-1319
DESCRIPTION:	SSG INT HORIZ'L GLAZING FIN (1 5/16")
Ixx	.
Sxx	.
ALLOY	6063-T5

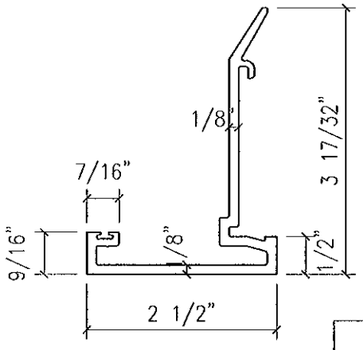

EXTRUSION NO:	TGF-1325
DESCRIPTION:	2 1/2" JAMB FACE CAP (1 5/16" GLAZING)
Ixx	.
Sxx	.
ALLOY	6063-T5

FOR MIAMI-DADE CO. B.C.C.O.

Approved as complying with the Florida Building Code
Date 10/20/2011
NOA# 11-0201.03
Miami Dade Product Control
By

JEFFREY H MARSH
LICENSE
No 70018
STATE OF
FLORIDA
PROFESSIONAL ENGINEER
10/4/2011

GLASS COMPANY
1101 13TH STREET WEST RIVIERA BEACH, FLORIDA 33404
PH. (561) 863-7078 FAX (561) 863-7088
www.trainorglass.com
TRAINOR
ILLINOIS FLORIDA GEORGIA NEW JERSEY COLORADO TEXAS ARIZONA VIRGINIA MARYLAND

REVISIONS

NO.	DATE	BY
1	.	.
2	.	.
3	.	.
4	.	.
5	.	.
6	.	.

DESIGN ENGINEERING & CONSULTING Inc
FAX: 972-644-4840
TEL: 972-644-4304
3205 K. COLLINS BLVD.
RICHARDSON, TEXAS 75082 SUITE 100

Date	Scale
3-3-11	HALF

Drawing No
4326435

Drawing Title
90 PSF SMALL MISSILE IMPACT EXTRUSIONS

Sheet No
39 / 44

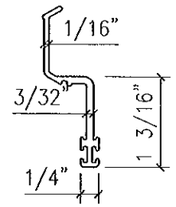

EXTRUSION NO:	TGF-1308
DESCRIPTION:	SSG VERTICAL GLAZING FIN FOR (9/16" GLAZING)
Ixx	.
Sxx	.
ALLOY	6063-T5

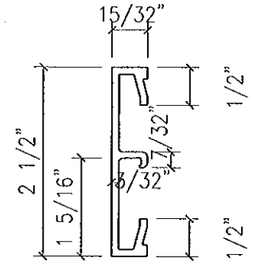

EXTRUSION NO:	TGF-1331
DESCRIPTION:	2 1/2" INT HORIZ. FACE CAP
Ixx	.
Sxx	.
ALLOY	6063-T5

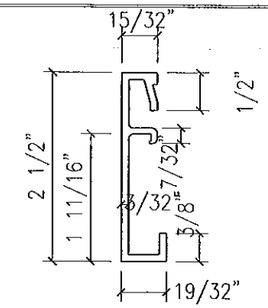

EXTRUSION NO:	TGF-1333
DESCRIPTION:	2 1/2" HEAD FACE CAP
Ixx	.
Sxx	.
ALLOY	6063-T5

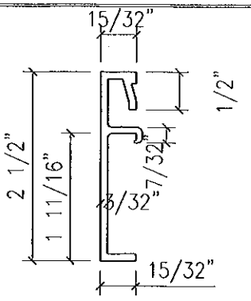

EXTRUSION NO:	TGF-1334
DESCRIPTION:	2 1/2" STACK HORIZ. FACE CAP
Ixx	.
Sxx	.
ALLOY	6063-T5

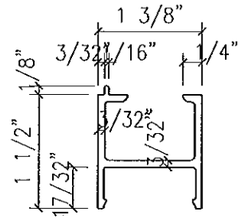

EXTRUSION NO:	TGF-1342
DESCRIPTION:	1 5/16" POCKET FILLER
Ixx	.
Sxx	.
ALLOY	6063-T5

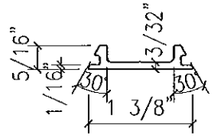

EXTRUSION NO:	TGF-1343
DESCRIPTION:	POCKET FILLER SNAP COVER
Ixx	.
Sxx	.
ALLOY	6063-T5

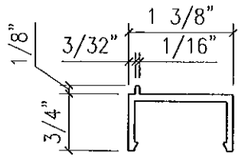

EXTRUSION NO:	TGF-1344
DESCRIPTION:	9/16" POCKET FILLER
Ixx	.
Sxx	.
ALLOY	6063-T5

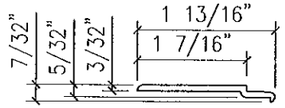

EXTRUSION NO:	TGF-1346
DESCRIPTION:	1 5/16" GLAZING ADAPTER AT STACK GUTTER
Ixx	.
Sxx	.
ALLOY	6063-T5

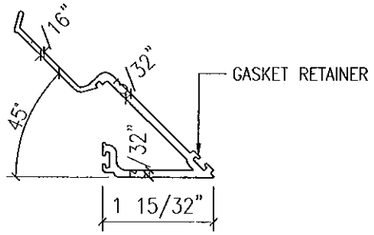

EXTRUSION NO:	TGF-1350
DESCRIPTION:	9/16" GLAZING FIN AT 90° OUTSIDE CORNER
Ixx	.
Sxx	.
ALLOY	6063-T5

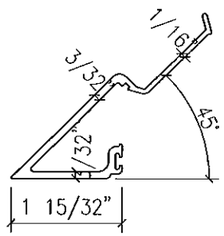

EXTRUSION NO:	TGF-1351
DESCRIPTION:	9/16" GLAZING FIN AT 90° OUTSIDE CORNER
Ixx	.
Sxx	.
ALLOY	6063-T5

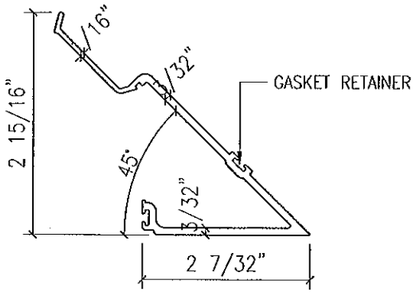

EXTRUSION NO:	TGF-1352
DESCRIPTION:	1 5/16" GLAZING FIN AT 90° OUTSIDE CORNER
Ixx	.
Sxx	.
ALLOY	6063-T5

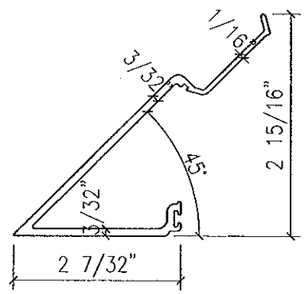

EXTRUSION NO:	TGF-1353
DESCRIPTION:	1 5/16" GLAZING FIN AT 90° OUTSIDE CORNER
Ixx	.
Sxx	.
ALLOY	6063-T5

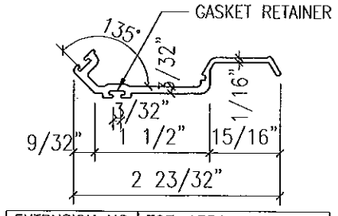

EXTRUSION NO:	TGF-1354
DESCRIPTION:	9/16" GLAZING FIN AT 90° INSIDE CORNER
Ixx	.
Sxx	.
ALLOY	6063-T5

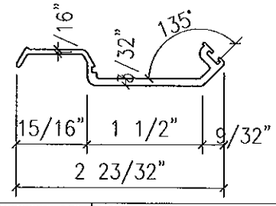

EXTRUSION NO:	TGF-1355
DESCRIPTION:	9/16" GLAZING FIN AT 90° INSIDE CORNER
Ixx	.
Sxx	.
ALLOY	6063-T5

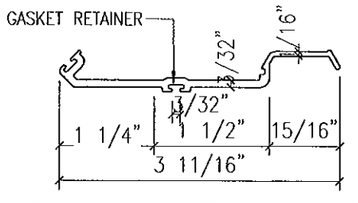

EXTRUSION NO:	TGF-1356
DESCRIPTION:	1 5/16" GLAZING FIN AT 90° INSIDE CORNER
Ixx	.
Sxx	.
ALLOY	6063-T5

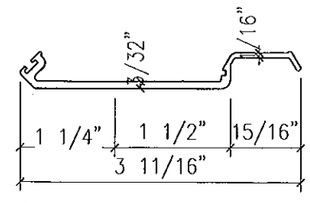

EXTRUSION NO:	TGF-1357
DESCRIPTION:	1 5/16" GLAZING FIN AT 90° INSIDE CORNER
Ixx	.
Sxx	.
ALLOY	6063-T5

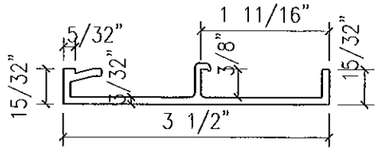

EXTRUSION NO:	TGF-1365
DESCRIPTION:	3 1/2" DL SILL FACE CAP
Ixx	.
Sxx	.
ALLOY	6063-T5

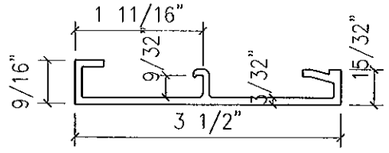

EXTRUSION NO:	TGF-1366
DESCRIPTION:	3 1/2" HEAD FACE CAP
Ixx	.
Sxx	.
ALLOY	6063-T5

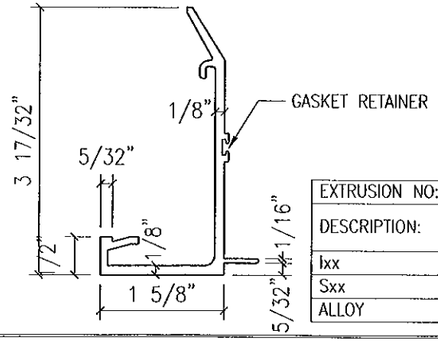

EXTRUSION NO:	TGF-1321
DESCRIPTION:	3 1/2" MALE FACE CAP FOR (1 5/16" GLAZING)
Ixx	.
Sxx	.
ALLOY	6063-T5

EXTRUSION NO:	TGF-1322
DESCRIPTION:	3 1/2" FEMALE FACE CAP FOR (1 5/16" GLAZING)
Ixx	.
Sxx	.
ALLOY	6063-T5

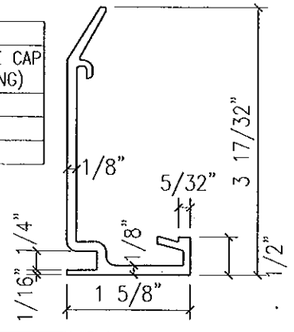

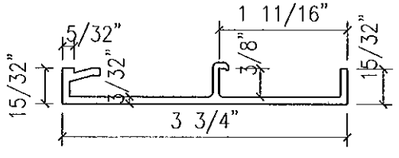

EXTRUSION NO:	TGF-1367
DESCRIPTION:	3 3/4" WL SILL FACE CAP
Ixx	.
Sxx	.
ALLOY	6063-T5

FOR MIAMI-DADE CO. B.C.C.O.

Approved as complying with the Florida Building Code
Date 10/20/2011
NOA# 11-0401.03
Miami Dade Product Control
By

JEFFREY H MARSH
LICENSE
No 70018
STATE OF FLORIDA
PROFESSIONAL ENGINEER
10/4/2011

GLASS COMPANY
1101 13TH STREET WEST RIVIERA BEACH, FLORIDA 33404
PH. (561) 863-7078 FAX (561) 863-7088
www.trainorglass.com
TRAINOR
ILLINOIS FLORIDA GEORGIA NEW JERSEY COLORADO TEXAS ARIZONA VIRGINIA MARYLAND

REVISIONS

NO.	DATE	BY

DESIGN ENGINEERING & CONSULTING Inc

Date	Scale
3-3-11	HALF

Drawing No
4326435

Drawing Title
90 PSF
SMALL MISSILE IMPACT
EXTRUSIONS

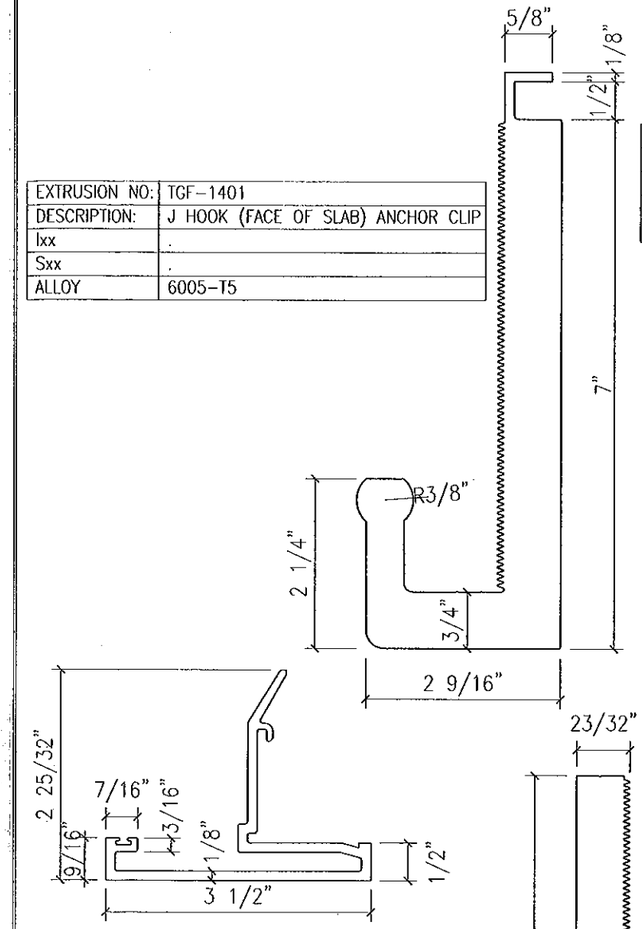

EXTRUSION NO:	TGF-1401
DESCRIPTION:	J HOOK (FACE OF SLAB) ANCHOR CLIP
Ixx	.
Sxx	.
ALLOY	6005-T5

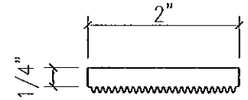

EXTRUSION NO:	TGF-1402
DESCRIPTION:	SERRATED WASHER
Ixx	.
Sxx	.
ALLOY	6005-T5

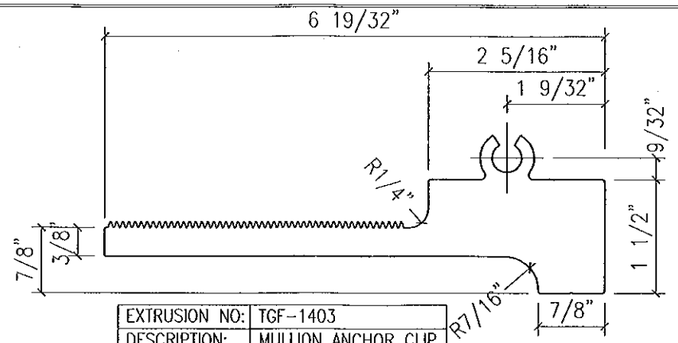

EXTRUSION NO:	TGF-1403
DESCRIPTION:	MULLION ANCHOR CLIP
Ixx	.
Sxx	.
ALLOY	6005-T5

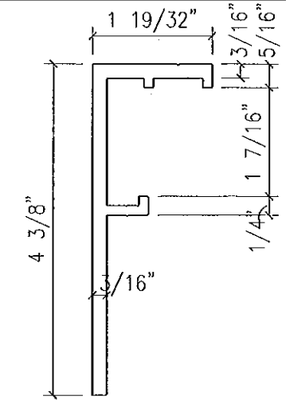

EXTRUSION NO:	TGF-1404
DESCRIPTION:	ANTI-WALK / ANTI-LIFT
Ixx	.
Sxx	.
ALLOY	6005-T5

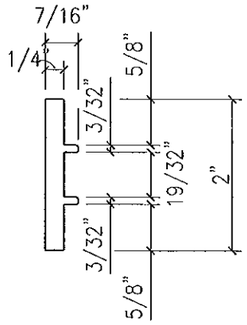

EXTRUSION NO:	TGF-1405
DESCRIPTION:	MULLION ANCHOR BAR / LIFTING LUG
Ixx	.
Sxx	.
ALLOY	6005-T5

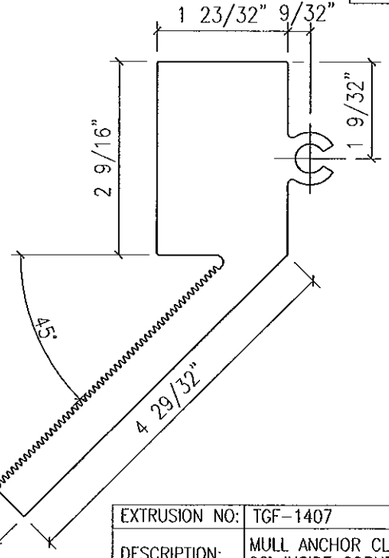

EXTRUSION NO:	TGF-1407
DESCRIPTION:	MULL ANCHOR CLIP AT 90° INSIDE CORNER
Ixx	.
Sxx	.
ALLOY	6005-T5

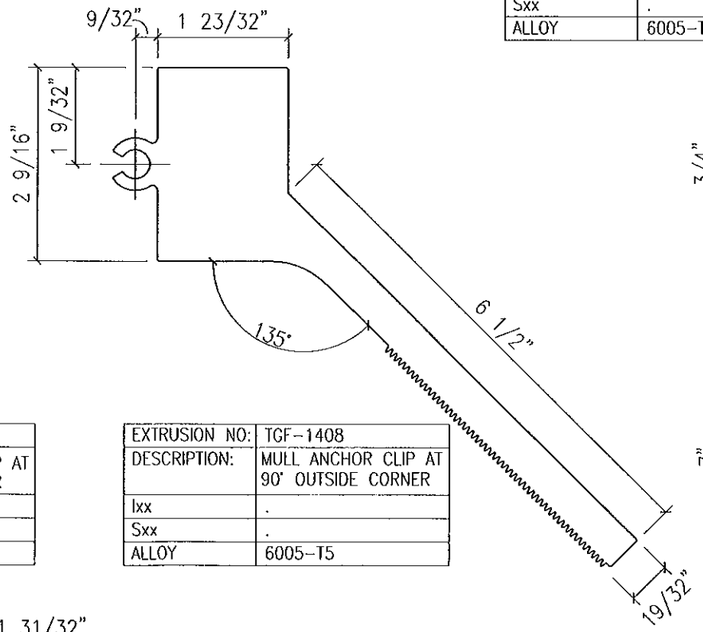

EXTRUSION NO:	TGF-1408
DESCRIPTION:	MULL ANCHOR CLIP AT 90° OUTSIDE CORNER
Ixx	.
Sxx	.
ALLOY	6005-T5

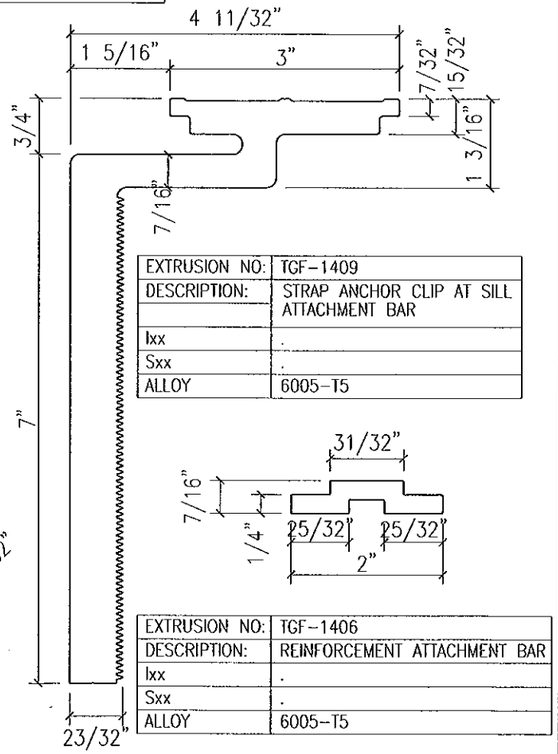

EXTRUSION NO:	TGF-1409
DESCRIPTION:	STRAP ANCHOR CLIP AT SILL ATTACHMENT BAR
Ixx	.
Sxx	.
ALLOY	6005-T5

EXTRUSION NO:	TGF-1406
DESCRIPTION:	REINFORCEMENT ATTACHMENT BAR
Ixx	.
Sxx	.
ALLOY	6005-T5

EXTRUSION NO:	TGF-1363
DESCRIPTION:	3 1/2" JAMB FACE CAP FOR (9/16" GLAZING)
Ixx	.
Sxx	.
ALLOY	6063-T5

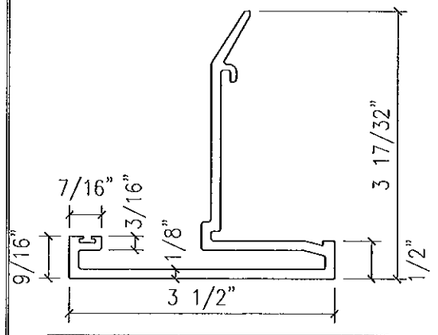

EXTRUSION NO:	TGF-1364
DESCRIPTION:	3 1/2" JAMB FACE CAP FOR (1 5/16" GLAZING)
Ixx	.
Sxx	.
ALLOY	6063-T5

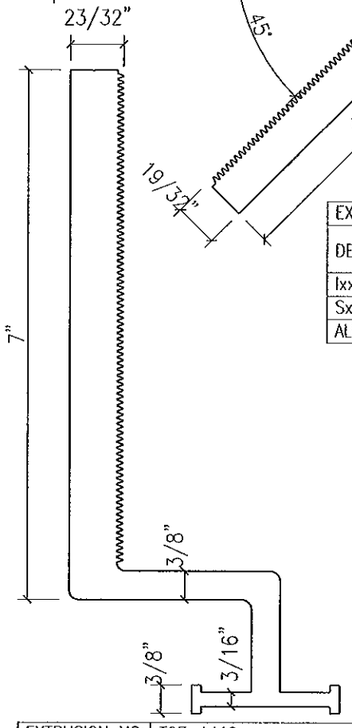

EXTRUSION NO:	TGF-1410
DESCRIPTION:	STRAP ANCHOR CLIP AT HEAD ATTACHMENT BAR
Ixx	.
Sxx	.
ALLOY	6005-T5

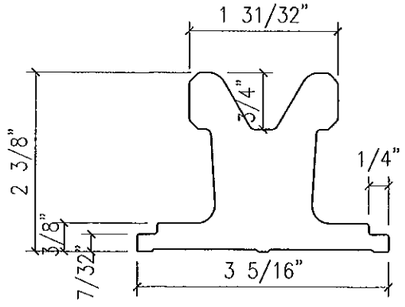

EXTRUSION NO:	TGF-1411
DESCRIPTION:	SILL ANCHOR MULLION LUG
Ixx	.
Sxx	.
ALLOY	6005-T5

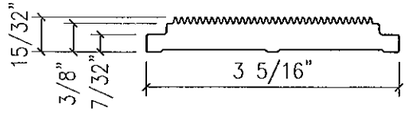

EXTRUSION NO:	TGF-1412
DESCRIPTION:	SILL STARTER REINFORCING AT ANCHOR PLATE
Ixx	.
Sxx	.
ALLOY	6005-T5

FOR MIAMI-DADE CO. B.C.C.O.

Approved as complying with the Florida Building Code
Date 10/20/2011
NOA# 11-0401.03
Miami Dade Product Control
By

JEFFREY H MARSH
LICENSE
No 70018
STATE OF
FLORIDA
PROFESSIONAL ENGINEER
10/4/2011

GLASS COMPANY
1101 13TH STREET WEST RIVIERA BEACH, FLORIDA 33404
PH. (561) 863-7078 FAX (561) 863-7088
www.trainorglass.com
TRAINOR
ILLINOIS FLORIDA GEORGIA NEW JERSEY COLORADO TEXAS ARIZONA VIRGINIA MARYLAND

REVISIONS

NO.	DATE	BY

DESIGN ENGINEERING & CONSULTING Inc.

Date	Scale
3-3-11	HAUF

Drawing No
4326435

Drawing Title
90 PSF SMALL MISSILE IMPACT EXTRUSIONS

Sheet No
41 / 44

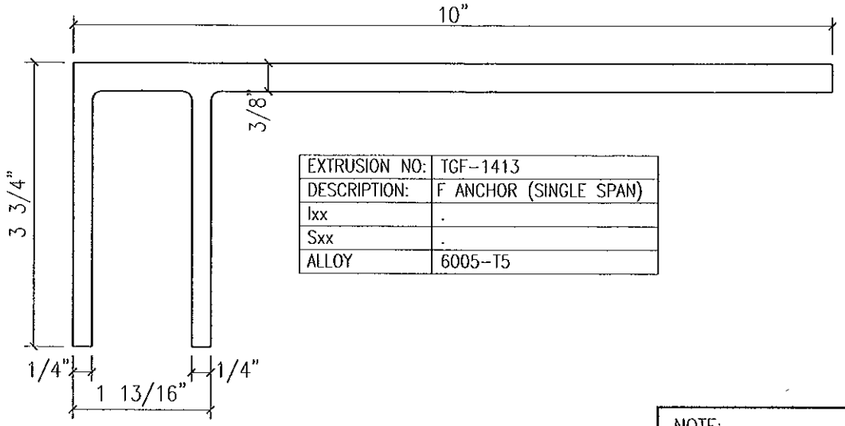

EXTRUSION NO:	TGF-1413
DESCRIPTION:	F ANCHOR (SINGLE SPAN)
Ixx	.
Sxx	.
ALLOY	6005-T5

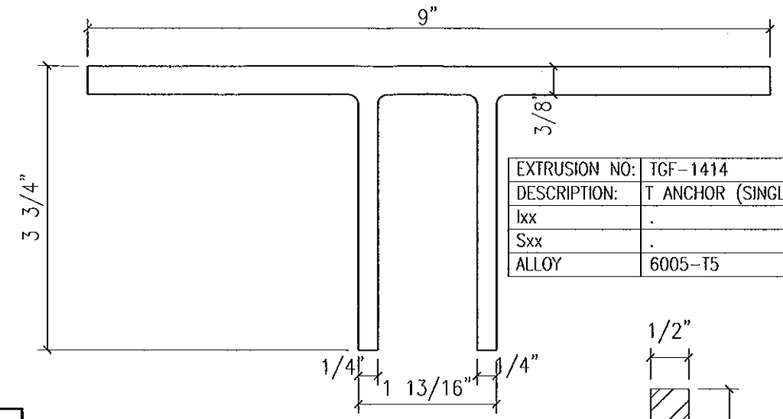

EXTRUSION NO:	TGF-1414
DESCRIPTION:	T ANCHOR (SINGLE SPAN)
Ixx	.
Sxx	.
ALLOY	6005-T5

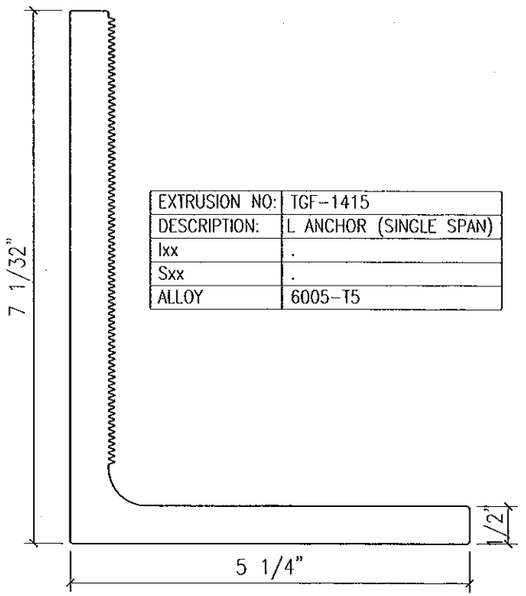

EXTRUSION NO:	TGF-1415
DESCRIPTION:	L ANCHOR (SINGLE SPAN)
Ixx	.
Sxx	.
ALLOY	6005-T5

NOTE:
STEEL IN CONTACT WITH ALUMINUM MUST BE COATED w/ RED OXIDE PRIMER

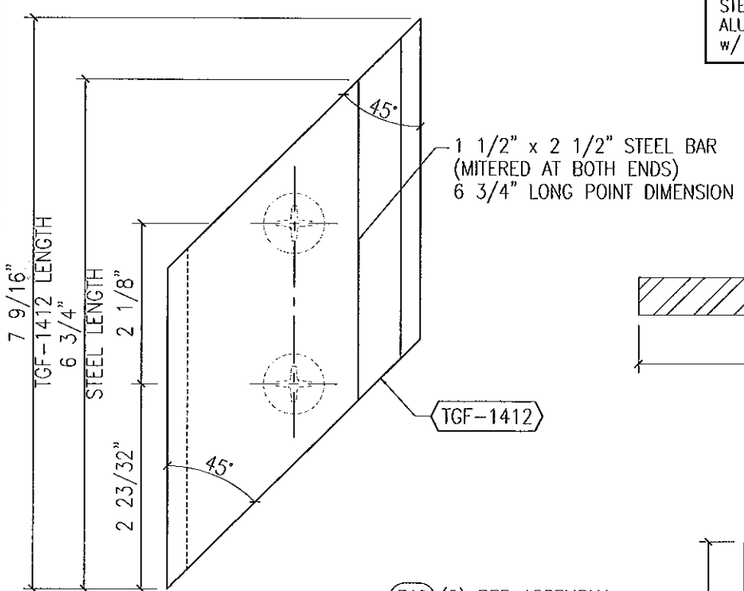

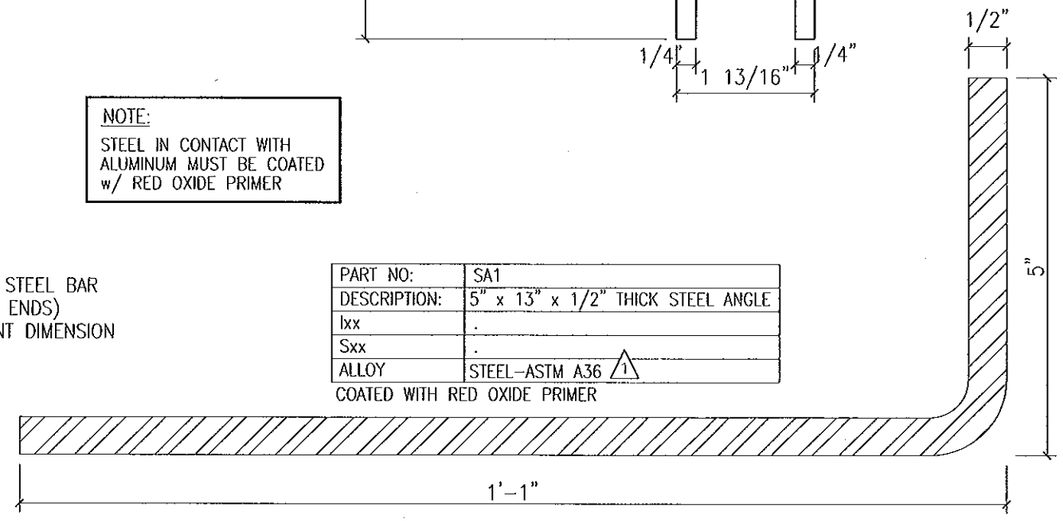

PART NO:	SA1
DESCRIPTION:	5" x 13" x 1/2" THICK STEEL ANGLE
Ixx	.
Sxx	.
ALLOY	STEEL-ASTM A36 1

COATED WITH RED OXIDE PRIMER

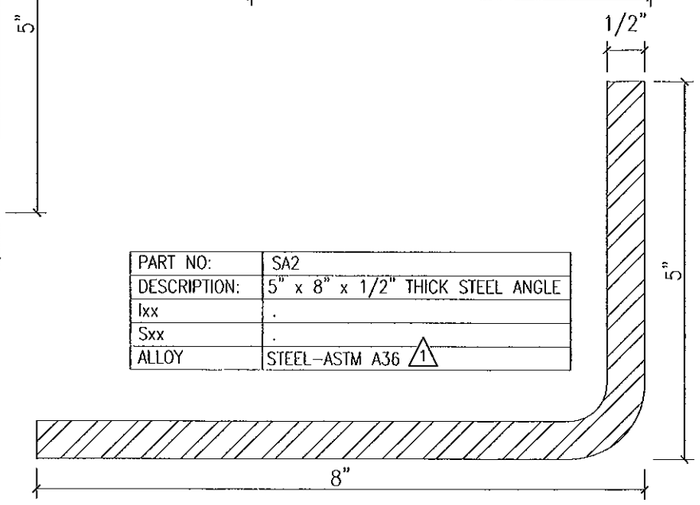

PART NO:	SA2
DESCRIPTION:	5" x 8" x 1/2" THICK STEEL ANGLE
Ixx	.
Sxx	.
ALLOY	STEEL-ASTM A36 1

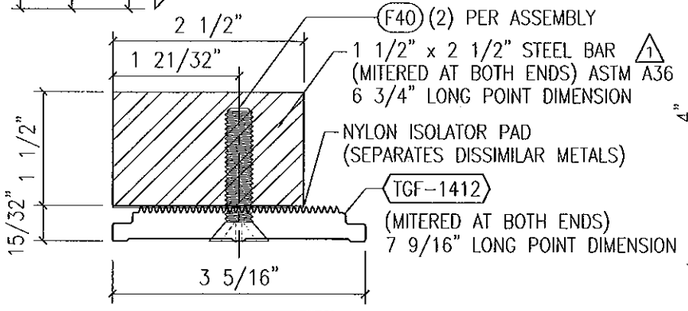

CORNER ANCHOR CLIP ASSEMBLY (HEAD/SILL)	
EXTRUSION NO:	TGF-1412 DOUBLE-MITERED
DESCRIPTION:	SILL STARTER REINFORCING ANCHOR PLATE FASTENED TO 1 1/2" x 2 1/2" STEEL BAR w/ (2) 3/8" x 1 1/2" FH MACHINE SCREWS
Ixx	.
Sxx	.
ALLOY	6005-T5 (TGF-1412 ONLY)

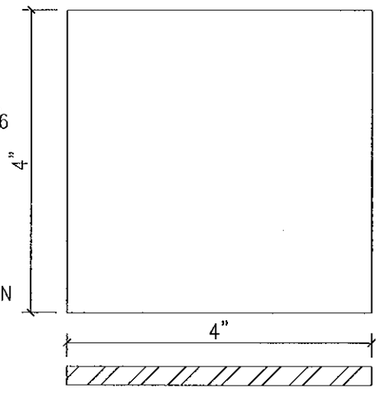

PART NO:	SP1
DESCRIPTION:	4" x 4" x 1/4" STEEL PLATE
Ixx	.
Sxx	.
ALLOY	STEEL-ASTM A36 1

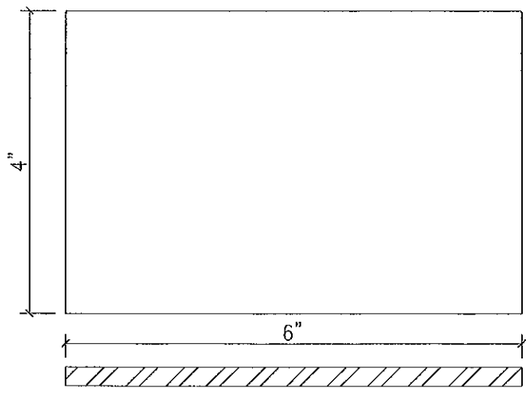

PART NO:	SP2
DESCRIPTION:	4" x 6" x 1/4" STEEL PLATE
Ixx	.
Sxx	.
ALLOY	STEEL-ASTM A36 1

FOR MIAMI-DADE CO. B.C.C.O.

Approved as complying with the Florida Building Code
Date 10/20/2011
NOA# 11-0401.03
Miami Dade Product Control
By

JEFFREY H MARSH
LICENSE
No 70018
STATE OF FLORIDA
PROFESSIONAL ENGINEER
10/4/2011

GLASS COMPANY
1101 13TH STREET WEST RIVIERA BEACH, FLORIDA 33404
PH. (561) 863-7078 FAX (561) 863-7088
www.trainorglass.com
TRAINOR
ILLINOIS FLORIDA GEORGIA NEW JERSEY COLORADO TEXAS ARIZONA VIRGINIA MARYLAND

REVISIONS

NO.	DATE	BY	
1	9/20/11	DEC	REVISED STEEL CALLOUT
2	.	.	.
3	.	.	.
4	.	.	.
5	.	.	.
6	.	.	.

DESIGN ENGINEERING & CONSULTING
2999 N. COLLINS BLVD. - SUITE 100 PH: 972-644-2640
RICHARDSON, TEXAS 75080 FAX: 972-644-4204

Date	Scale
3-3-11	HALF

Drawing No
4326435

Drawing Title
90 PSF
SMALL MISSILE IMPACT EXTRUSIONS

Sheet No
42 / 44

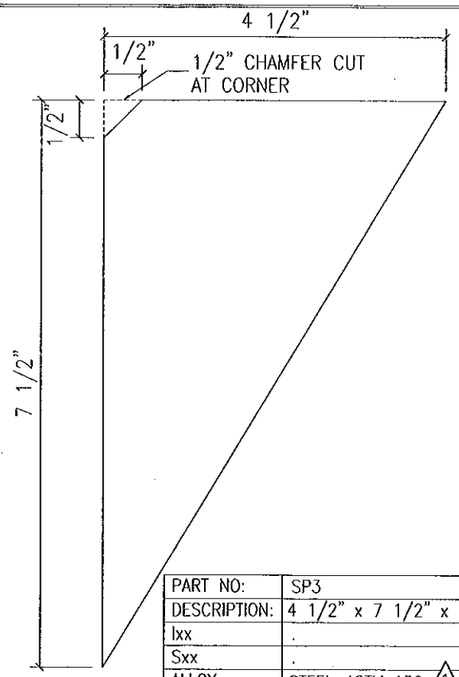

PART NO:	SP3
DESCRIPTION:	4 1/2" x 7 1/2" x 3/8" GUSSET PLATE
Ixx	.
Sxx	.
ALLOY	STEEL-ASTM A36 (1)

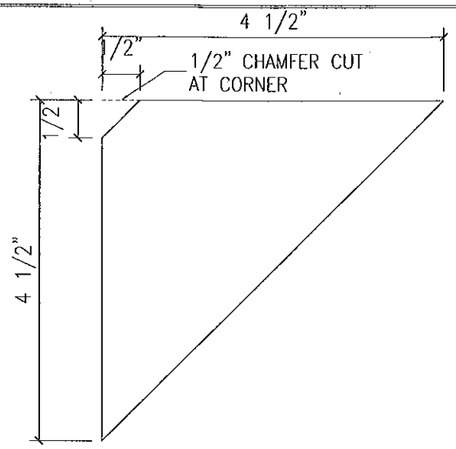

PART NO:	SP4
DESCRIPTION:	4 1/2" x 4 1/2" x 3/8" GUSSET PLATE
Ixx	.
Sxx	.
ALLOY	STEEL-ASTM A36 (1)

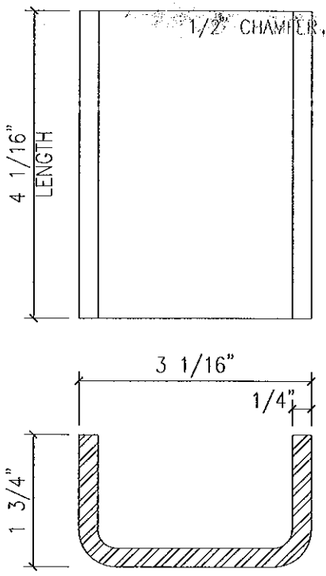

PART NO:	SC1
DESCRIPTION:	1 3/4" x 3 1/16" x 1 3/4" STEEL CHANNEL
Ixx	.
Sxx	.
ALLOY	STEEL-ASTM A36 (1)

COATED WITH RED OXIDE PRIMER

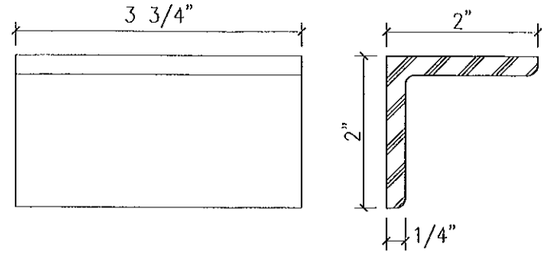

EXTRUSION NO:	AA1
DESCRIPTION:	2" x 2" x 1/4" THICK ALUM ANGLE
Ixx	.
Sxx	.
ALLOY	6061-T6

NOTE:
STEEL IN CONTACT WITH ALUMINUM MUST BE COATED w/ RED OXIDE PRIMER

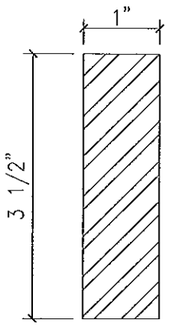

PART NO:	SB-1
DESCRIPTION:	3 1/2" x 1" STEEL REINF. BAR
Ixx	.
Sxx	.
ALLOY	STEEL-ASTM A36 (1)

COATED WITH RED OXIDE PRIMER

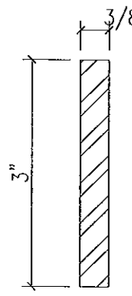

PART NO:	SB-2
DESCRIPTION:	3" x 3/8" STEEL REINF. BAR
Ixx	.
Sxx	.
ALLOY	STEEL-ASTM A36 (1)

COATED WITH RED OXIDE PRIMER

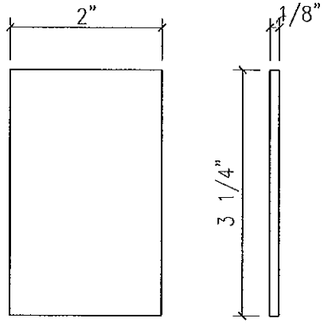

EXTRUSION NO:	AP1
DESCRIPTION:	1/8" x 3 1/4" END DAM PLATE
Ixx	.
Sxx	.
ALLOY	3003-H14

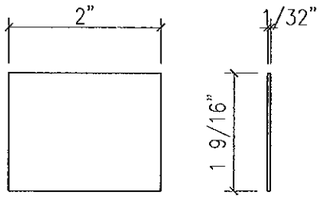

EXTRUSION NO:	AP2
DESCRIPTION:	.040" x 1 9/16" ALUM WATER DIVERTER (2" LONG) AT 1 5/16" GLASS
Ixx	.
Sxx	.
ALLOY	3003-H14

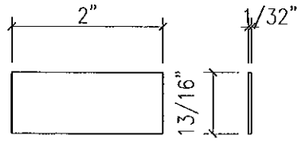

EXTRUSION NO:	AP3
DESCRIPTION:	.040" x 13/16" ALUMINUM WATER DIVERTER (2" LONG) AT 9/16" GLASS
Ixx	.
Sxx	.
ALLOY	3003-H14

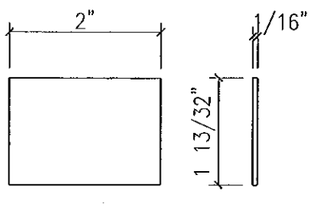

EXTRUSION NO:	AP4
DESCRIPTION:	1/16" x 1 13/32" ALUMINUM PLATE (2" LONG) AT HORIZ'L STACK JOINT
Ixx	.
Sxx	.
ALLOY	3003-H14

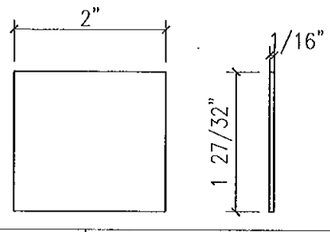

EXTRUSION NO:	AP5
DESCRIPTION:	1/16" x 1 27/32" ALUMINUM PLATE (2" LONG) AT STARTER SILL SPLICE
Ixx	.
Sxx	.
ALLOY	3003-H14

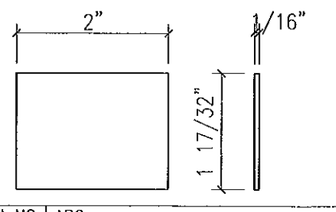

EXTRUSION NO:	AP6
DESCRIPTION:	1/16" x 1 17/32" ALUMINUM PLATE (2" LONG) AT STARTER SILL SPLICE
Ixx	.
Sxx	.
ALLOY	3003-H14

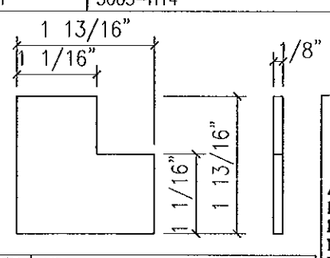

EXTRUSION NO:	AP7
DESCRIPTION:	1/8" THICK ALUM CORNER PLATE
Ixx	.
Sxx	.
ALLOY	3003-H14

FOR MIAMI-DADE CO. B.C.C.O.

Approved as complying with the Florida Building Code
Date 10/20/2011
NOA# 11-0401.03
Miami Dade Product Control
By

JEFFREY H MARSH
LICENSE
No 70018
STATE OF FLORIDA
PROFESSIONAL ENGINEER
10/4/2011

GLASS COMPANY
1101 13TH STREET WEST RIVIERA BEACH, FLORIDA 33404
PH. (561) 863-7078 FAX (561) 863-7088
www.trainorglass.com
TRAINOR
ILLINOIS FLORIDA GEORGIA NEW JERSEY COLORADO TEXAS ARIZONA VIRGINIA MARYLAND

NO.	DATE	BY	REVISIONS
1	9/29/11	BC	BEVELED STEEL CALIANT

DESIGN ENGINEERING & CONSULTING
2828 N. COLLINS BLVD., SUITE 100
RICHARDSON, TEXAS 75080
PH: 972-644-2800
FAX: 972-644-4828

Date	Scale
3-3-11	HALF

Drawing No
4326435

Drawing Title
90 PSF
SMALL MISSILE IMPACT
EXTRUSIONS

Sheet No
43 / 44

1 1/16" SILICONE BOND WIDTH CHART											
WINDLOAD	(SMALLEST LEG OF LARGEST LITE OF GLASS) – INCHES										
90 PSF	24	30	36	42	48	52	54	56.5	60	66	72	76
	OK	OK	OK	OK	OK	OK	OK	OK	OK	OK	FAIL	FAIL

A: 1 1/16" SILICONE BOND WIDTH IS ACCEPTABLE FOR SPECIFIED GLAZING SIZES WITHIN CHART.

B: REFER TO NOTE (1) ON PAGE 7 OF 44 /1

1 REGLAZED SSG JAMB MULLION
w/ 1 5/16" GLASS

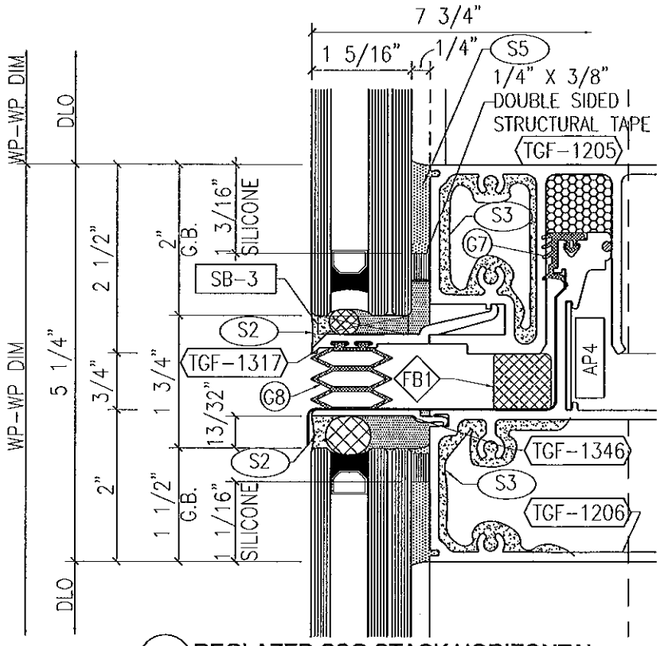

1 REGLAZED SSG STACK HORIZONTAL
w/ 1 5/16" GLAZING

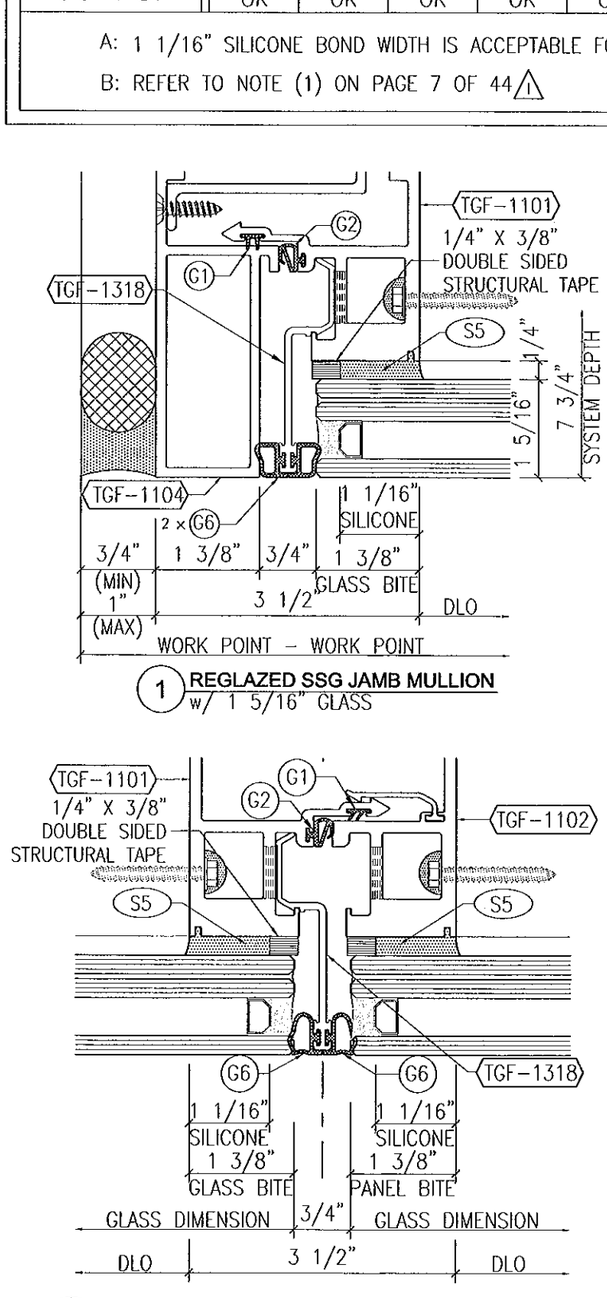

1 REGLAZED SSG INT MULLION
w/ 1 5/16" THICK GLASS OR COMPOSITE PANEL

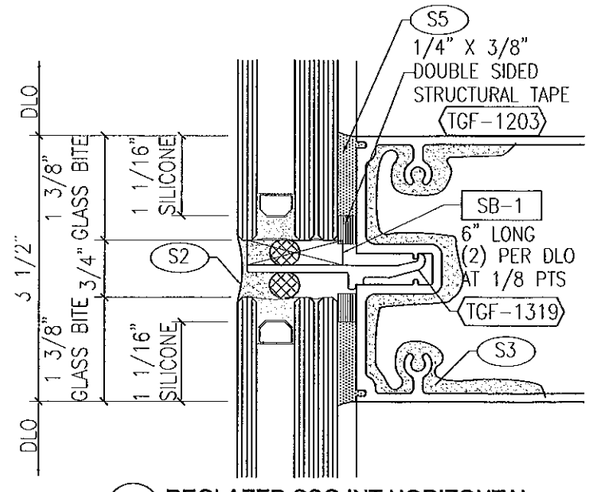

1 REGLAZED SSG INT HORIZONTAL
w/ 1 5/16" THICK GLASS

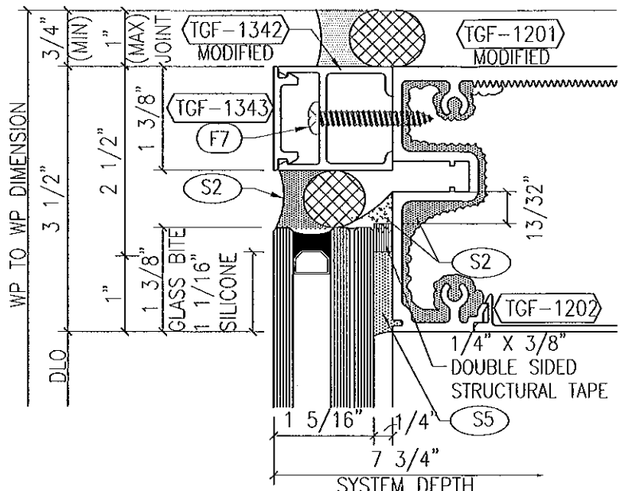

1 REGLAZED SSG HEAD HORIZONTAL
w/ 1 5/16" THICK GLASS

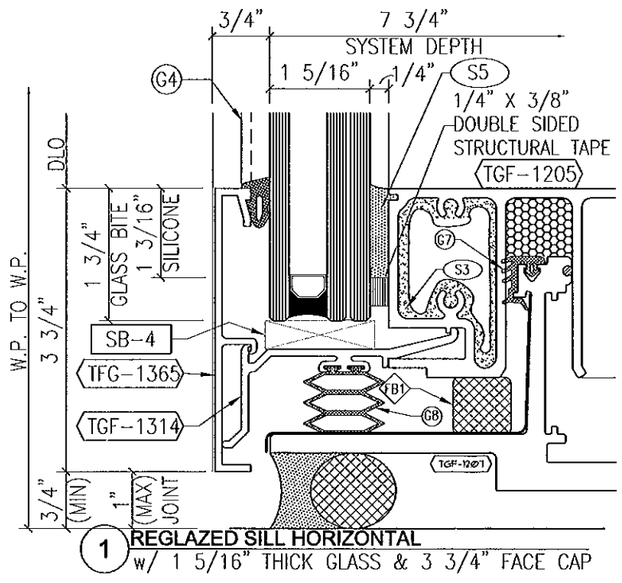

1 REGLAZED SILL HORIZONTAL
w/ 1 5/16" THICK GLASS & 3 3/4" FACE CAP

FOR MIAMI-DADE CO. B.C.C.O.

Approved as complying with the Florida Building Code
Date 10/20/2011
NOA# 11-0401.03
Miami-Dade Product Control
By

JEFFREY H MARSH
LICENSE
No 70018
STATE OF
FLORIDA
PROFESSIONAL ENGINEER
10/4/2011

GLASS COMPANY
TRAINOR
1101 13TH STREET WEST RIVIERA BEACH, FLORIDA 33404
PH. (561) 863-7078 FAX (561) 863-7088
www.trainorglass.com
ILLINOIS FLORIDA GEORGIA NEW JERSEY COLORADO TEXAS ARIZONA VIRGINIA MARYLAND

NO.	DATE	BY	REVISIONS
1	10/10/11	GD	ADDED NOTE

DESIGN ENGINEERING & CONSULTING Inc

Date	Scale
3-3-11	HALF

Drawing No
4326435

Drawing Title
90 PSF
SMALL MISSILE IMPACT
REGLAZE DETAILS

Sheet No
44/44