MIAMI-DADE COUNTY
DEPARTMENT OF PERMITTING, ENVIRONMENT, AND REGULATORY AFFAIRS (PERA)
BOARD AND CODE ADMINISTRATION DIVISION

MIAMI–DADE COUNTY
PRODUCT CONTROL SECTION
11805 SW 26 Street, Room 208
Miami, Florida 33175–2474
T (786) 315–2590 F (786) 315–2599
www.miamidade.gov/pera/

NOTICE OF ACCEPTANCE (NOA)

Trainor Glass Company
1101 W. 13th Street West
Riviera Beach, FL 33404

SCOPE:

This NOA is being issued under the applicable rules and regulations governing the use of construction materials. The documentation submitted has been reviewed and accepted by Miami–Dade County PERA–Product Control Section to be used in Miami–Dade County and other areas where allowed by the Authority Having Jurisdiction (AHJ).

This NOA shall not be valid after the expiration date stated below. The Miami–Dade County Product Control Section (In Miami–Dade County) and/or the AHJ (in areas other than Miami–Dade County) reserve the right to have this product or material tested for quality assurance purposes. If this product or material fails to perform in the accepted manner, the manufacturer will incur the expense of such testing and the AHJ may immediately revoke, modify, or suspend the use of such product or material within their jurisdiction. PERA reserves the right to revoke this acceptance, if it is determined by Miami–Dade County Product Control Section that this product or material fails to meet the requirements of the applicable building code.

This product is approved as described herein, and has been designed to comply with the Florida Building Code, including the High Velocity Hurricane Zone.

DESCRIPTION: Series "T850 ICW 130 PSF" Aluminum Curtain Wall System – S.M.I.

APPROVAL DOCUMENT: Drawing No. **4326439**, titled "Series T850 ICW System Single & Multiple Span 130 PSF Small Missile Impact", sheets 1 through 41 of 41, dated 03/03/2011 with revision "**2**" dated 10/04/2011, prepared by Design Engineering & Consulting, Inc., signed and sealed by Jeffery H. Marsh, P. E., bearing the Miami–Dade County Product Control Approval stamp with the Notice of Acceptance number and Approval date by the Miami–Dade County Product Control Section.

MISSILE IMPACT RATING: Small Missile Impact Resistant.

LABELING: Each unit shall bear a permanent label with the manufacturer's name or logo, city, state, model/series and following statement: "Miami–Dade County Product Control Approved" unless otherwise noted herein.

RENEWAL of this NOA shall be considered after a renewal application has been filed and there has been no change in the applicable building code negatively affecting the performance of this product.

TERMINATION of this NOA will occur after the expiration date or if there has been a revision or change in the materials, use, and/or manufacture of the product or process. Misuse of this NOA as an endorsement of any product, for sales, advertising or any other purposes shall automatically terminate this NOA. Failure to comply with any section of this NOA shall be cause for termination and removal of NOA.

ADVERTISEMENT: The NOA number preceded by the words Miami–Dade County, Florida, and followed by the expiration date may be displayed in advertising literature. If any portion of the NOA is displayed, then it shall be done in its entirety.

INSPECTION: A copy of this entire NOA shall be provided to the user by the manufacturer or its distributors and shall be available for inspection at the job site at the request of the Building Official.

This NOA consists of this page 1, evidence pages E–1 and E–2, as well as approval document mentioned above.

The submitted documentation was reviewed by **Jaime D. Gascon, P. E.**

MIAMI-DADE COUNTY APPROVED

J. Gascon
10/14/11

NOTICE OF ACCEPTANCE: EVIDENCE SUBMITTED

A. DRAWINGS

1. Manufacturer's die drawings and sections.
2. Drawing No. **4326439**, titled "Series T850 ICW System Single & Multiple Span 130 PSF Small Missile Impact", sheets 1 through 41 of 41, dated 03/03/2011 with revision "**2**" dated 10/20/2011, prepared by Design Engineering & Consulting, Inc., signed and sealed by Jeffery H. Marsh, P. E.

B. TESTS

1. Test reports on: 1) Air Infiltration Test, per FBC, TAS 202–94
   2) Uniform Static Air Pressure Test, Loading per FBC TAS 202–94
   3) Water Resistance Test, per FBC, TAS 202–94
   4) Dynamic Water Infiltration Test, per FBC and per AAMA 501.1–05
   5) Interstory Displacement Test, per FBC and per AAMA 501.4–00
   6) Small Missile Impact Test per FBC, TAS 201–94
   7) Thermal Cycling Test, per FBC and per AAMA 501.5–07
   8) Cyclic Wind Pressure Loading per FBC, TAS 203–94

   along with marked–up drawings and installation diagram of curtain wall system, prepared by Hurricane Test Laboratory, LLC, Test Reports No.'s **HTL 0062–0307–10**, **HTL 0062–0906–10** and **HTL 0062–0909–10**, dated 05/18, 09/28/2010 and 03/24/2011, all signed and sealed by Vinu J. Abraham, P. E.

C. CALCULATIONS

1. Anchor calculations and structural analysis, complying with FBC–2007, prepared by Design Engineering & Consulting, Inc., dated 11/18/2010, signed, sealed and dated 10/04/2011 by Jeffery H. Marsh, P. E.
   Complies with ASTM E1300–04

QUALITY ASSURANCE

1. Miami–Dade Department of Permitting, Environment, and Regulatory Affairs (PERA).

MATERIAL CERTIFICATIONS

1. Notice of Acceptance No. **11–0624.02** issued to E.I. DuPont DeNemours & Co., Inc. for their **"DuPont Sentry Glass® Interlayer"** dated 05/26/2010, expiring on 01/14/12.
2. Notice of Acceptance No. **09–0223.05** issued to Solutia Inc. for their **"Saflex Multi–layer Glass Interlayer"** dated 04/08/2009, expiring on 04/08/2014.

Jaime D. Gascon, P. E.
Product Control Section Supervisor
NOA No. 11–0401.05
Expiration Date: October 20, 2016
Approval Date: October 20, 2011

STATEMENTS

1. Statement letter of compliance with the FBC–2007 and FBC–2010, dated 10/04/2011, signed and sealed by Jeffery H. Marsh, P. E.
2. Statement letter of no financial interest, conformance and compliance with the FBC–2007, dated 11/18/2010, signed and sealed by Jeffery H. Marsh, P. E.
3. Laboratory compliance letters for Test Reports No.'s **HTL 0062 – 0307 – 10**, **HTL 0062–0906–10** and **HTL 0062–0909–10**, issued by Hurricane Test Laboratory, LLC, dated 05/18, 09/28/2010 and 03/24/2011, all signed and sealed by Vinu J. Abraham, P. E.

OTHERS

1. None.

Jaime D. Gascon, P. E.
Product Control Section Supervisor
NOA No. 11–0401.05
Expiration Date: October 20, 2016
Approval Date: October 20, 2011

TRAINOR GLASS - T850 ICW SYSTEM
SINGLE & MULTIPLE SPAN
130 PSF SMALL MISSILE IMPACT

GLAZING GASKETS AND TAPES

PART NO.	PROFILE	DESCRIPTION	MANUFACTURER NO.	MATERIAL	DUROMETER	COLOR	FURNISHED BY
G-1		PRESET WIPER GASKET	TX-18034E	EPDM	70±5	BLACK	TRAINOR/ TREMCO
G-2		PRESET AIR SEAL BULB GASKET	TX-17992E	EPDM	70±5	BLACK	TRAINOR/ TREMCO
G-3		PRESET RAINSCREEN GASKET	TX-15075E	EPDM	70±5	BLACK	TRAINOR/ TREMCO
G-4		WEDGE GASKET	TR-6329E	EPDM	70±5	BLACK	TRAINOR/ TREMCO
G-5		PRESET GASKET	TR-5796W	SCR-900	70±5	BLACK	TRAINOR/ TREMCO
G-6		PRESET GLASS EDGE BULB GASKET	TX-17989E	EPDM	70±5	BLACK	TRAINOR/ TREMCO
G-7		PRESET AIR SEAL WIPER GASKET	TX-17979E	EPDM	70±5	BLACK	TRAINOR/ TREMCO
G-8		ACCORDIAN RAINSCREEN GASKET	TX-17980P/S	PEROX. EPDM SILICONE	60±5	BLACK	TRAINOR/ TREMCO
		0.062" X 6" EXTRUDED SILICONE SHEET	TR4949S	SILICONE	N/A 2	TRANS-LUCENT	TRAINOR/ TREMCO
FB-1		EXTRUDED CLOSED CELL FOAM BAFFLE 6" LONG	TR16132E	EPDM	N/A 2	BLACK	TRAINOR/ TREMCO
FB-2		EXTRUDED CLOSED CELL FOAM BAFFLE 6" LONG	TR16133E	EPDM	N/A 2	BLACK	TRAINOR/ TREMCO

SETTING BLOCKS

PART NO.	PROFILE	DESCRIPTION	MANUFACTURER NO.	MATERIAL	DUROMETER
SB-1		5/16" X 1 1/4" X 4"	TR-1731S	SILICONE	85±5
SB-2		5/16" X 1/2" X 4"	TR-1058S	SILICONE	85±5
SB-3		1/4" X 1 3/8" X 4"	TR-1064S	SILICONE	85±5
SB-4		3/8" X 1 1/4" X 4"	TR-5043S	SILICONE	85±5
SB-5		3/8" X 11/16" X 4"	TX-18035S	SILICONE	85±5
SB-6		1/4" X 1/2" X 4"	TR-1294S	SILICONE	85±5

INDEX

1/41 COVER SHEET
2/41 LISTS OF MATERIALS
3/41 ELEVATIONS – SINGLE SPAN
4/41 ELEVATIONS – MULTIPLE SPAN
5/41 GLAZING CHART
6/41 SINGLE SPAN MULLION CHART
7/41 MULTIPLE SPAN MULLION CHART
8/41 DETAILS – JAMB
9/41 DETAILS – INTERMEDIATE MULLION
10/41 DETAILS – INSIDE CORNER MULLION
11/41 DETAILS – OUTSIDE CORNER MULLION
12/41 DETAILS – HEAD
13/41 DETAILS – INTERMEDIATE HORIZONTAL
14/41 DETAILS – SINGLE-SPAN SILL
15/41 DETAILS – CURTAINWALL SILL
16/41 DETAILS – EXPANSION (STACK) HORIZONTAL
17/41 ANCHOR DETAILS – JAMB
18/41 ANCHOR DETAILS – INT MULLION
19/41 ANCHOR DETAILS – INSIDE CORNER MULLION
20/41 ANCHOR DETAILS – OUTSIDE CORNER MULLION
21/41 ANCHOR DETAILS – OUTSIDE CORNER MULLION
22/41 ANCHOR DETAILS – SINGLE SPAN HEAD
23/41 ANCHOR DETAILS – MULTIPLE SPAN HEAD
24/41 ANCHOR DETAILS – SINGLE SPAN SILL
25/41 ANCHOR DETAILS – MULTIPLE SPAN SILL
26/41 ANCHOR DETAILS – HEAD/SILL STRAP ANCHORS
27/41 ANCHOR LAYOUTS
28/41 ANCHOR LAYOUTS
29/41 ANCHOR LAYOUTS
30/41 ANCHOR LAYOUTS
31/41 ANCHOR LAYOUTS
32/41 EXTRUSIONS
33/41 EXTRUSIONS
34/41 EXTRUSIONS
△ 35/41 EXTRUSIONS
36/41 EXTRUSIONS
37/41 EXTRUSIONS
38/41 EXTRUSIONS & STEEL SHAPES
39/41 STEEL & BRAKE SHAPES
40/41 REGLAZE DETAILS
41/41 REGLAZE DETAILS

GENERAL NOTES

DESIGN PARAMETERS

△2 2007 AND 2010 FLORIDA BUILDING CODE WITH HVHZ REQUIREMENTS
TAS-201 – LARGE AND SMALL MISSILE IMPACT
TAS-202 – AIR LEAKAGE, WATER PENETRATION AND STRUCTURAL PERFORMANCE
TAS-203 – CYCLIC WIND PRESSURE LOADING

ASTM STANDARDS

E283 STATIC AIR LEAKAGE
E331 STATIC WATER PENETRATION
E501.1 DYNAMIC WATER PENETRATION
E330 UNIFORM STRUCTURAL DESIGN
E1886 LEVEL "D" IMPACT BY MISSILE & CYCLIC PRESSURES
AAMA – TIR – A9 – 91

SYSTEM DIMENSIONS

3 1/2" x 7 3/4" WITH 1 5/16" GLAZING
3 1/2" x 7" WITH 9/16"

FINISH

ON A PER JOB BASIS (EXPOSED AREAS)
CLEAR ANODIZED (NON EXPOSED AREAS)
MILL (NON-EXPOSED AREAS SUCH AS SETTING CHAIRS, ANCHOR CLIPS, ETC)
ALUMINUM IN CONTACT WITH DISSIMILAR MATERIALS SHALL BE PROTECTED AS SPECIFIED IN SECTION 2003.8.4 OF THE FLORIDA BUILDING CODE (FBC)

ALUMINUM ALLOYS

6063-T5, 6063-T6 AND 6005-T5 (SEE ALSO EXTRUSIONS ON SHEETS 36-43)

STEEL

ALL REINFORCING STEEL SHALL BE PER ASTM-A36 (PRIME PAINTED)

GLASS

SEE "GLASS TYPES" SECTION ON THIS COVER SHEET
SEE GLAZING CHART ON SHEET 5

GASKETS

SEE "GLAZING GASKETS AND TAPES" SECTION ON THIS COVER SHEET

SEALANTS

SEE "SEALANT TYPES" SECTION ON THIS COVER SHEET
SEE "PERIMETER SEALANT OPTIONS" ON SHEETS 8, 12, 14 & 15

ANCHORAGE

FASTENERS AND ANCHOR BOLTS TO BE CORROSION RESISTANT AS DETAILED HEREIN AND CONFORM TO THE FLORIDA BUILDING CODE (FBC)

GLASS TYPES

TAG	DESCRIPTION
GL1	1 5/16" THK. INSULATED GLASS SMALL MISSILE I.G. LAMI CONSISTING OF: -1/4" CLEAR, TEMPERED -1/2" AIRSPACE -1/4" CLEAR ,HEAT STRENGTHENED -0.035 SENTRYGLAS -MDCA △1 -1/4" CLEAR ,HEAT STRENGTHENED
GL2	9/16" THK. LAMINATED GLASS SMALL MISSILE LAMI CONSISTING OF: -1/4" CLEAR ,HEAT STRENGTHENED -0.035 SENTRYGLAS – MDCA △1 -1/4" CLEAR ,HEAT STRENGTHENED
GL3	1 5/16" COMPOSITE METAL PANEL SMALL MISSILE, CONSISTING OF: 4MM COMPOSITE ALUMINUM CLEAR ANODIZED 1" RIGID INSULATION .060 ALUM. SHEET CLEAR ANODIZED
GL4	9/16" THK. LAMINATED GLASS SMALL MISSILE LAMI CONSISTING OF: -1/4" CLEAR ,HEAT STRENGTHENED -0.060 SAFLEX IIIG PVB -1/4" CLEAR ,HEAT STRENGTHENED

SEALANT TYPES

TAG	DESCRIPTION
S-1	DOW-CORNING 983 (2 PART SILICONE) COLOR: (BLACK) SHOP APPLIED STRUCTURAL SILICONE SEALANT
S-2	DOW-CORNING 795 (1 PART SILICONE) COLOR: (BLACK) SHOP APPLIED WEATHER SEAL AND PERIMETER SEALANT
S-3	DOW-CORNING 795 (1 PART SILICONE) COLOR: (TO MATCH FRAME) SHOP APPLIED JOINERY SILICONE SEALANT
S-4	DOW-CORNING 795 (1 PART SILICONE) COLOR: (TO BE DETERMINED) FIELD JOINERY AND PERIMETER SILICONE SEALANT
S-5	DOW-CORNING 995 (1 PART SILICONE) COLOR: (BLACK) FIELD REGLAZE STRUCTURAL SILICONE SEALANT

FOR MIAMI-DADE CO. B.C.C.O.

Approved as complying with the Florida Building Code
Date 10/20/2011
NOA# 11-0620.05
Miami Dade Product Control
By

JEFFREY H MARSH
LICENSE
No 70018
STATE OF
FLORIDA
PROFESSIONAL ENGINEER
10/5/2011

TRAINOR GLASS COMPANY
1101 13TH STREET WEST RIVIERA BEACH, FLORIDA 33404
PH. (561) 863-7078 FAX (561) 863-7088
www.trainorglass.com
ILLINOIS FLORIDA GEORGIA NEW JERSEY COLORADO TEXAS ARIZONA VIRGINIA MARYLAND

NO.	DATE	BY	REVISIONS
1	6/22/11	BBC	ADDED BETTER BLACK DIMENSIONAL, UPDATED BRAKE LABELS
2	9/28/11	BBC	ADDED NOTES TO GLAZING CHARTS AND SHT.
3			
4			
5			
6			

DESIGN ENGINEERING & CONSULTING INC.
2005 N. COLLINS BLVD., SUITE 100 RICHARDSON, TEXAS 75080
TEL 972-644-0640 FAX 972-644-0326

Date	Scale
3-3-11	NONE

Drawing No 4326439

Drawing Title 130 PSF SMALL MISSILE IMPACT COVER SHEET

Sheet No 1 / 41

LISTS OF MATERIALS

FASTENERS

NO.	PROFILE	DESCRIPTION
F-1		#12-14 x 1 1/2" HWH SMS
F-4		#12-24 x 5/8" PH SMS (S.S. OR CAP SEAL)
F-5		12-24 x 3/4" HWH SMS
F-6		12-24 x 3/4" 300 SERIES FH UNDER CUT S.S. SCREW
F-7		12-24 x 1 1/2" PH SMS (S.S. OR CAP SEAL)
F-10		3/8" x 2" HEX HEAD THRU-BOLT w/ WASHER & LOCK NUT
F-11		5/8-11 x 2 1/2" CONTI DUO-TAPTITE, Gr. 5 Δ WITH 1/2" MIN THICKNESS STEEL
F-12		3/8-16 X 4" LONG FULLY THREADED H.H.M.B. GR.5 WITH (2) HH NUT ZINC PLATED
F-13		5/8" x 2 3/4" LONG HHMB (GR5) w/ (2) FLAT WASHERS AND LOCK NUT
F-14		3/8" x 1 3/4" FH BOLT w/ FLAT WASHER AND LOCK NUT
F-20		#8-32 x 5/8" P.H. S.M.S.
F-22		Δ1/4" HH BUILDEX TAPCON CONCRETE ANCHOR W/ 1" MIN EMBED
F-24		1/4"-20 x 3/4" 300 SERIES (S.S.) FH SMS
F-25		1/4" x 1" HEX HEAD THRU BOLT w/ WASHER AND LOCK NUT
F-26		5/8" DIA HILTI HIT-HY 150 MAX ADHESIVE ANCHOR w/ 5 5/8" MIN EMBEDMENT
F-29		M16 (5/8") (GR8.8) 2 3/4" LONG HALFEN TEE-BOLTS
F-30		5/8" DIA. (5" LONG) HILTI KWIK BOLT III WITH 4" MIN EMBEDMENT
F-31		5/8" DIA (5" LONG) POWERS FASTENERS WEDGE BOLT Δ WITH 2-1/2" MIN EMBEDMENT
F-32		#12-14 x 1 1/2" HWH DRIL-FLEX FASTENER
F-33		#6-32 x 1/2" 300 SERIES (S.S.) FH SMS
F-34		M16 (5/8") (GR8.8) 3 1/2" LONG HALFEN TEE-BOLTS
F-37		1/2" -13 X 2 1/2" CONTI DUO-TAPTITE, Gr. 5 Δ WITH 1/2" MIN STEEL THICKNESS
F-38		5/8" x 3 1/2" LONG HHMB (GR5) w/ (2) FLAT WASHERS AND LOCK NUT
F-39		#12 x 3/4" PH SMS
F-40		3/8" x 1 1/2" FH MACHINE SCREW
F-41		3/8"-16 x 2" FH SMS w/ LOC-TITE
F-42		1/2" DIA. 5"LONG HILTI KWIK BOLT III WITH 4" MIN. EMBEDMENT
F-43		5/8"-11 x 2 3/4" FH BOLT w/ FLAT WASHER AND LOCK NUT
F-44		1/2"-13 x 1 1/2" 300 SERIES (S.S.) FH BOLT
F-45		1/2"-13 x 1 1/2" 300 SERIES (S.S.) FH MACHINE BOLT w/ LOC-TITE
F-46		1/2" x 6" 300 SERIES (S.S.) HEX HEAD BOLT w/ (S.S.) FLAT WASHERS & (S.S.) NYLON LOCK NUT

FASTENERS (CONT)

NO.	PROFILE	DESCRIPTION
F-47		3/8" x 3 3/4" 300 SERIES (S.S.) BOLT w/ (S.S.) FLAT WASHER AND (S.S.) NYLON LOCK NUT
F-48		1/4" x 2" 300 SERIES (S.S.) FH MACHINE SCREW
F-49		1/2"-13 x 2" 300 SERIES (S.S.) FH MACHINE BOLT w/ LOC-TITE
F-50		1/2"-13 x 2 1/2" 300 SERIES (S.S.) FH MACHINE BOLT w/ LOC-TITE
F-51		#12-14 x 1" UNDERCUT FH DRIL-FLEX FASTENER
F-52		#12 x 5/8" HWH SMS
F-53		3/4" DIA HILTI KWIK BOLT III w/ 5" MIN EMBEDMENT
F-54		3/4" x 2 3/4" (GR5) HHMB w/ (2) FLAT WASHERS & LOCK NUT
F-55		M20 x 3" (GR8.8) HALFEN TEE-BOLTS
F-56		5/8" x 1 1/2" (GR5) HHMB w/ HALFEN CHANNEL NUT (LP5511)
F-57		5/8" x 3" (GR5) HHMB w/ (2) FLAT WASHERS & HALFEN CHANNEL NUT (LP5511)
F-58		1/2" x 3" (GR5) HHMB w/ (2) FLAT WASHERS & LOCK NUT
F-59		M12 (1/2") x 4" (GR8.8) HALFEN TEE BOLTS
F-60		M12 (1/2") x 3" (GR8.8) HALFEN TEE BOLTS
F-61		1/2"-13 x 1 1/2" FH MACHINE SCREW w/ FLAT WASHER & LOCK NUT
F-62		M16 (5/8") (GR8.8) 4" LONG HALFEN TEE-BOLTS Δ

FOR MIAMI-DADE CO. B.C.C.O.

Approved as complying with the Florida Building Code
Date 10/20/2011
NOA# 11-0220.05
Miami Dade Product Control
By

JEFFREY H MARSH
LICENSE
No 70018
STATE OF
FLORIDA
PROFESSIONAL ENGINEER
10/5/2011

TRAINOR GLASS COMPANY
1101 13TH STREET WEST RIVIERA BEACH, FLORIDA 33404
PH. (561) 863-7078 FAX (561) 863-7088
www.trainorglass.com
ILLINOIS FLORIDA GEORGIA NEW JERSEY COLORADO TEXAS ARIZONA VIRGINIA MARYLAND

NO.	DATE	BY	REVISIONS
1	9/2/11	REC	ISSUED FOR PERMIT APPLICATION

DESIGN ENGINEERING & CONSULTING
2905 N. COLLINS BLVD. - SUITE 100
ARLINGTON, TEXAS 76006
PH: 972-544-2640
FAX: 972-544-4284

Date	Scale
3-3-11	NONE

Drawing No: 4326439

Drawing Title: 130 PSF SMALL MISSILE IMPACT LISTS OF MATERIALS

Sheet No: 2 / 41

1: DESIGN PARAMETERS

DETERMINE THE WIND LOAD REQUIREMENT BASED ON WIND VELOCITY , BUILDING HEIGHT, AND WIND ZONE USING APPLICABLE ASCE 7 STANDARDS OR PROJECT WIND TUNNEL ANALYSIS

2: GLAZING TYPES AND SIZES

SEE CHART ON SHEET 5 FOR ALLOWABLE DESIGN LOAD CAPACITY FOR DESIRED GLAZING TYPES AND SIZE

3: MULLION LENGTHS

SEE CHARTS ON SHEET 6 FOR ALLOWABLE DESIGN LOAD CAPACITY OF MULLION HEIGHTS AND MODULE WIDTHS. THE CAPACITY SHOULD EQUAL OR EXCEED THE DESIGN LOAD GIVEN FOR THE SPECIFIC PROJECT.

4: ANCHOR OPTIONS

SEE DETAILS ON 17-26 TO SELECT ANCHOR AND SUBSTRATE OPTIONS WITH CAPACITY EQUAL TO OR GREATER THAN THE DESIGN LOAD GIVEN.

5: ENTIRE ASSEMBLY

MULTIPLE UNITS CAN BE INSTALLED SIDE BY SIDE FOR AN UNLIMITED OVERALL ROUGH OPENING

REFER TO GLAZING CHARTS ON SHEET 5 FOR ALLOWABLE GLAZING TYPES AND MAXIMUM SIZES

NOTICE: OVERALL SQUARE FOOTAGE MUST NOT EXCEED MAXIMUM AREA OF TESTED GLAZING.

NOTICE: 4 SIDED CAPTURED WITH 2 1/2" EXTERIOR COVERS ARE SHOWN IN ELEVATION.

REFER TO SHEETS 8-16 FOR 3 1/2" EXTERIOR COVERS OPTIONS.

▶ DEAD LOAD ANCHOR

● WIND LOAD ANCHOR

= COMBINED MODULES

= INSIDE CORNER MODULE

= OUTSIDE CORNER MODULE

= JAMB MODULE

= TYPICAL MODULE

= TYPICAL MODULE

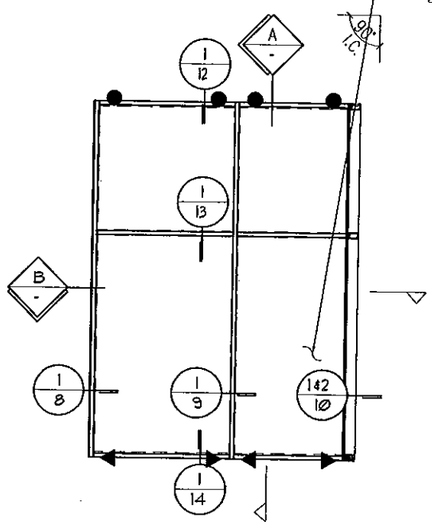

1 SINGLE SPAN ELEVATION
+ / - 130 PSF SMALL MISSILE IMPACT

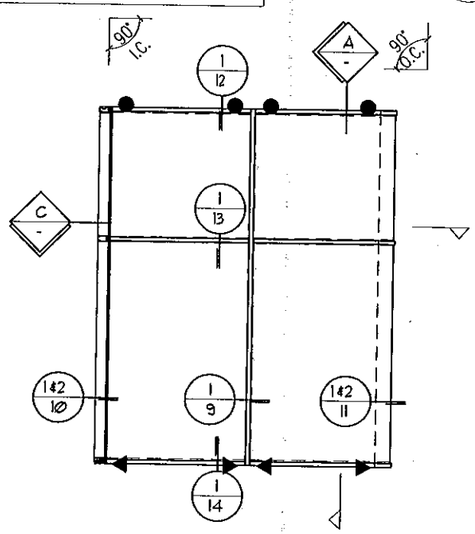

2 SINGLE SPAN ELEVATION
+ / - 130 PSF SMALL MISSILE IMPACT

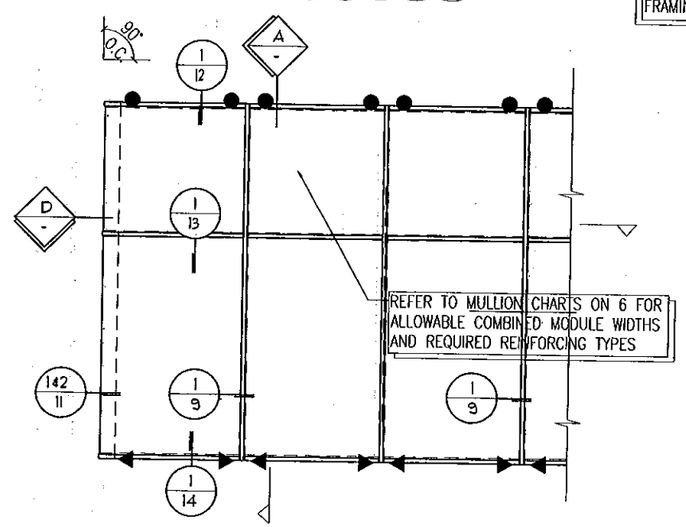

3 SINGLE SPAN ELEVATION
+ / - 130 PSF SMALL MISSILE IMPACT

REFER TO ANCHOR CHARTS ON SHEETS 17-26 FOR ALLOWABLE FRAMING , SUBSTRATES AND PRESSURES

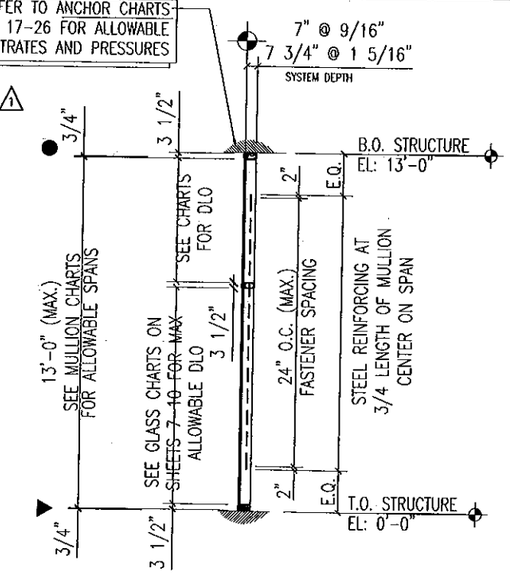

A WALL SECTION
+ / - 130 PSF SMALL MISSILE IMPACT

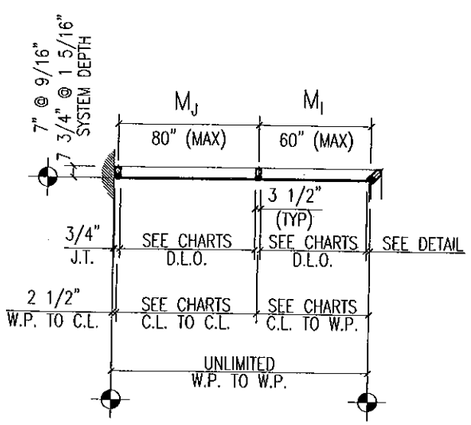

B KEY PLAN
+ / - 130 PSF SMALL MISSILE IMPACT

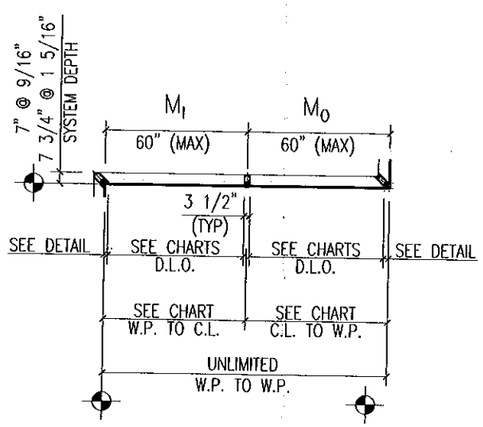

C KEY PLAN
+ / - 130 PSF SMALL MISSILE IMPACT

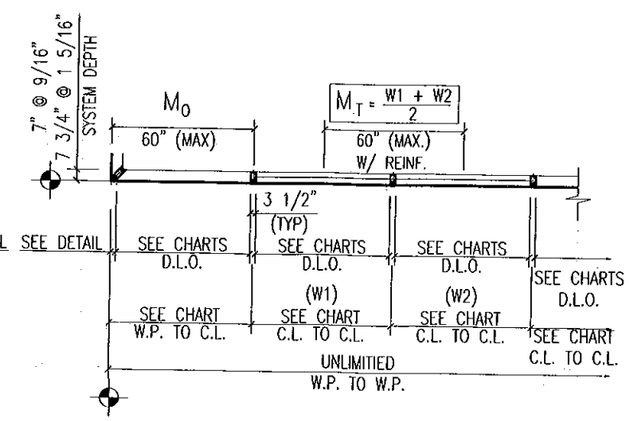

D KEY PLAN
+ / - 130 PSF SMALL MISSILE IMPACT

FOR MIAMI-DADE CO. B.C.C.O.

Approved as complying with the Florida Building Code
Date 10/20/2011
NOA# 11-0801.05
Miami Dade Product Control
By

JEFFREY H MARSH
LICENSE
No 70018
STATE OF
FLORIDA
PROFESSIONAL ENGINEER
10/5/2011

GLASS COMPANY
1101 13TH STREET WEST RIVIERA BEACH, FLORIDA 33404
PH. (561) 863-7078 FAX (561) 863-7088
www.trainorglass.com
TRAINOR
ILLINOIS FLORIDA GEORGIA NEW JERSEY COLORADO TEXAS ARIZONA VIRGINIA MARYLAND

NO.	DATE	BY	REVISIONS
1	9/22/11	EBC	INCORPORATED ANCHOR LOCATIONS TO ELEVATIONS

DESIGN ENGINEERING & CONSULTING Inc.

Date	Scale
3-3-11	1/4" = 1'-0"

Drawing No 4326439

Drawing Title 130 PSF SMALL MISSILE IMPACT ELEVATIONS

Sheet No 3 / 41

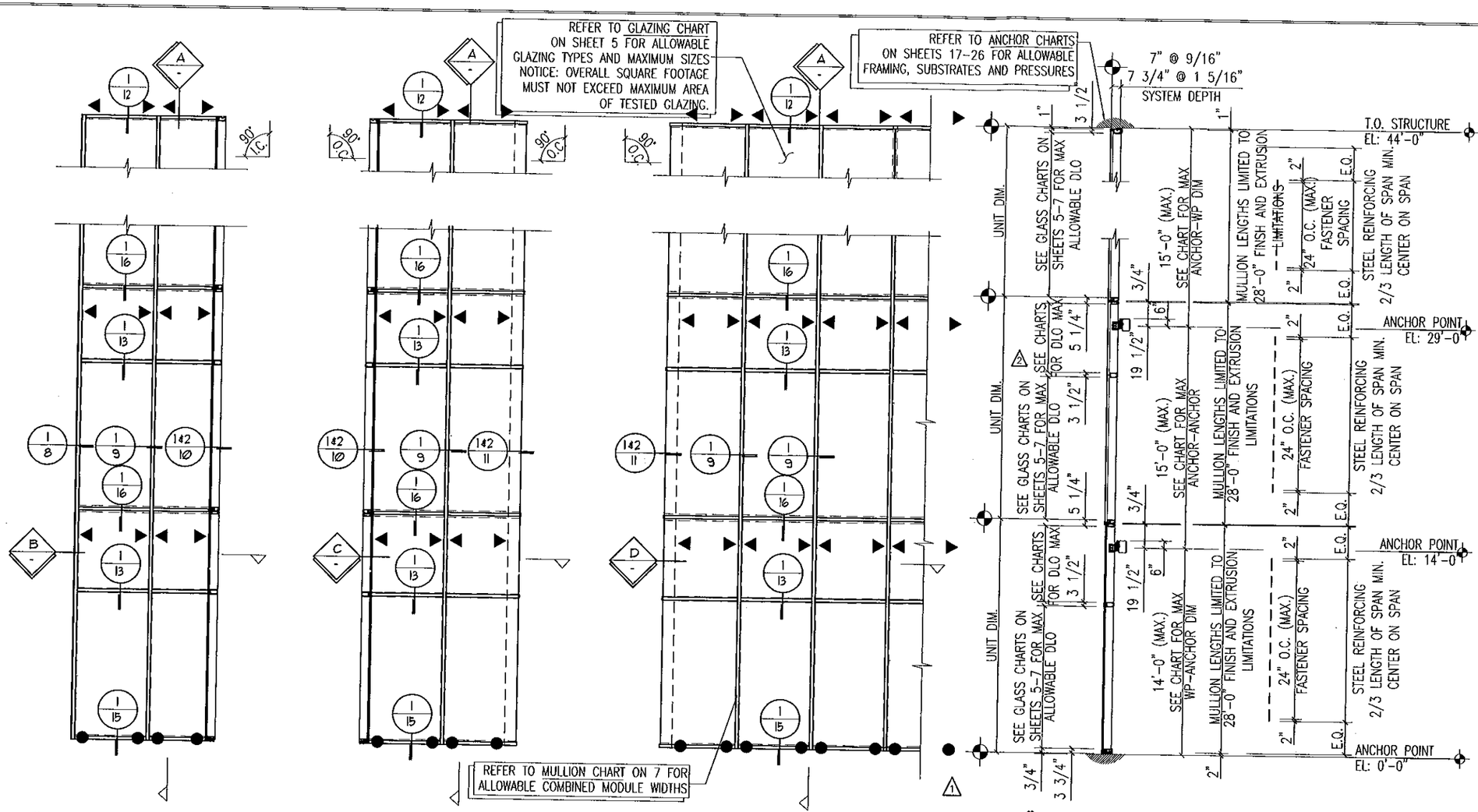

5 MULTIPLE SPAN ELEVATION
+ / - 130 PSF SMALL MISSILE IMPACT

6 MULTIPLE SPAN ELEVATION
+ / - 130 PSF SMALL MISSILE IMPACT

7 MULTIPLE SPAN ELEVATION
+ / - 130 PSF SMALL MISSILE IMPACT

A WALL SECTION
+ / - 130 PSF SMALL MISSILE IMPACT

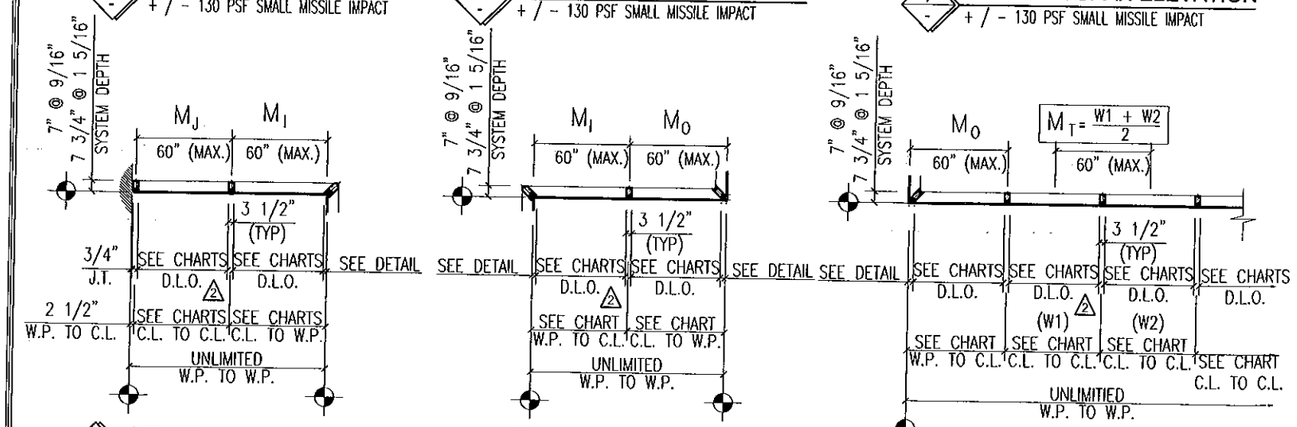

B KEY PLAN
+ / - 130 PSF SMALL MISSILE IMPACT

C KEY PLAN
+ / - 130 PSF SMALL MISSILE IMPACT

D KEY PLAN
+ / - 130 PSF SMALL MISSILE IMPACT

▶ DEAD LOAD ANCHOR

● WIND LOAD ANCHOR

M_T = COMBINED MODULES

M_I = INSIDE CORNER MODULE

M_O = OUTSIDE CORNER MODULE

M_J = JAMB MODULE

W1 = TYPICAL MODULE

W2 = TYPICAL MODULE

1: DESIGN PARAMETERS

DETERMINE THE WIND LOAD REQUIREMENT BASED ON WIND VELOCITY , BUILDING HEIGHT, AND WIND ZONE USING APPLICABLE ASCE 7 STANDARDS OR PROJECT WIND TUNNEL ANALYSIS

2: GLAZING TYPES AND SIZES

SEE CHART ON SHEET 5 FOR ALLOWABLE DESIGN LOAD CAPACITY FOR DESIRED GLAZING TYPES AND SIZE

3: MULLION LENGTHS

MULLION LENGTHS ARE LIMITED TO 28'-0" DUE TO EXTRUSION AND FINISH LIMITATIONS

4: ANCHOR POINT TO ANCHOR POINT

SEE CHART ON SHEET 7 FOR ALLOWABLE DESIGN LOAD CAPACITY OF ANCHOR POINTS AND MODULE WIDTHS. THE CAPACITY SHOULD EQUAL OR EXCEED THE DESIGN LOAD GIVEN FOR THE SPECIFIC PROJECT.

5: ANCHOR OPTIONS

SEE DETAILS ON 17-26 TO SELECT ANCHOR AND SUBSTRATE OPTIONS WITH CAPACITY EQUAL TO OR GREATER THAN THE DESIGN LOAD GIVEN.

6: ENTIRE ASSEMBLY

MULTIPLE UNITS CAN BE INSTALLED SIDE BY SIDE FOR AN UNLIMITED OVERALL ROUGH OPENING

NOTICE : 4 SIDED CAPTURED WITH 2 1/2" EXTERIOR COVERS ARE SHOWN IN ELEVATION.

REFER TO SHEETS 10-20 FOR 3 1/2" EXTERIOR COVERS OPTIONS.

FOR MIAMI-DADE CO. B.C.C.O.

Approved as complying with the Florida Building Code
Date 10/20/2011
NOA# 11-0801.06
Miami-Dade Product Control
By

JEFFREY H MARSH
LICENSE
No 70018
STATE OF FLORIDA
PROFESSIONAL ENGINEER
10/5/2011

GLASS COMPANY
1101 13TH STREET WEST RIVIERA BEACH, FLORIDA 33404
PH. (561) 863-7078 FAX (561) 863-7088
www.trainorglass.com
TRAINOR
ILLINOIS FLORIDA GEORGIA NEW JERSEY COLORADO TEXAS ARIZONA VIRGINIA MARYLAND

REVISIONS

NO.	DATE	BY	
1	8/25/11	BSC	ADDED ANCHOR LOCATIONS TO ELEVATIONS
2	9/26/11	BSC	REVISED CAPTURED EXTERIOR TEXT
3			
4			
5			
6			

DESIGN ENGINEERING & CONSULTING Inc.
2905 N. COLLINS BLVD. - SUITE 100 PH. 972-544-4646
RICHARDSON, TEXAS 75080 FAX 972-544-4254

Date	Scale
3-3-11	1/4" = 1'-0"

Drawing No
4326439

Drawing Title
130 PSF SMALL MISSILE IMPACT ELEVATIONS

Sheet No
4 / 41

MAX. DESIGN PRESSURES (PSF) FOR VARIOUS GLASS TYPES

SQUARE FEET	GLASS WIDTH (DLO)	GLASS HEIGHT (DLO)	GL1 1 5/16" THK.	GL2 9/16" THK.	GL3 1 5/16" THK.	GL4 9/16" THK.
22.12	48	60	+130, −130	+130, −130	+130, −130	+130, −130
23.86	52					
24.73	54					
25.82	56.5					
27.34	60					
29.96	66					
32.57	72					
34.32	76					
26.34	48	72	+130, −130	+130, −130	+130, −130	+130, −130
28.42	52					
29.46	54					
30.76	56.5					
32.57	60					
35.69	66					
38.80	72					
40.88	76					
30.57	48	84	+130, −130	+130, −130	+130, −130	+130, −130
32.98	52					
34.19	54					
35.69	56.5					
37.80	60					
41.42	66					
45.03	72					
47.44	76					
31.28	48	86	+130, −130	+130, −130		+130, −130
33.74	52					
34.98	54					
36.52	56.5					
38.67	60					
42.37	66					
46.07	72					
48.54	76					
34.80	48	96	+130, −130	+130, −130		+130, −130
37.55	52					
38.92	54					
40.63	56.5					
43.03	60					
47.15	66					
39.03	48	108	+130, −130	+130, −130		+130, −130
42.11	52					
43.65	54					
45.57	56.5					
41.76	48	115.75				
45.05	52					
46.70	54					
48.76	56.5					

GLASS & INFILL TYPES

1 3/8" SILICONE BOND WIDTH CHART

WINDLOAD 130 PSF	(SMALLEST LEG OF LARGEST LITE OF GLASS) – INCHES											
	24	30	36	42	48	52	54	56.5	60	66	72	76
	OK	OK	OK	OK	OK	OK	OK	OK	X	X	X	X

A: 1 3/8" SILICONE BOND WIDTH IS ACCEPTABLE FOR I.S. AND O.S. CORNERS ONLY
B: REFER TO NOTE (1)

NOTES:

1: ALL GLAZING TYPES AND SIZES ARE ACCEPTABLE AT 130PSF FOR :
(4) SIDED CAPTURED, SSG AT CORNERS ONLY
– REFER TO SHEET 8 FOR JAMB CONDITIONS AND GLAZING OPTIONS
– REFER TO SHEET 9 FOR TYPICAL MULLION CONDITIONS AND GLAZING OPTIONS
– REFER TO SHEET 10 FOR INSIDE 90deg. CORNER CONDITIONS
– REFER TO SHEET 11 FOR OUTSIDE 90deg. CORNER CONDITIONS
– REFER TO SHEET 12 FOR HEAD HORIZONTAL CONDITIONS AND GLAZING OPTIONS
– REFER TO SHEET 13 FOR INTERMEDIATE HORIZONTAL CONDITIONS AND GLAZING OPTIONS
– REFER TO SHEETS 14 & 15 FOR SILL HORIZONTAL CONDITIONS AND GLAZING OPTIONS
– REFER TO SHEET 16 FOR EXPANSION (STACK) HORIZONTAL CONDITIONS AND GLAZING OPTIONS

2: ALL GLAZING SIZES MUST MEET ASTM E1300–04 WITH A SQUARE FOOTAGE LESS THAN OR EQUAL TO THE MAXIMUM TESTED SQUARE FOOT SIZE. REFER TO GLAZING OPTIONS CHART

3: 1 3/8" MINIMUM GLASS BITE AT ALL GLAZING AND FRAMING OPTIONS UP TO 1–3/4" MAX. GLASS BITE AT CAPTURED STACK AND SILL HORIZONTALS. 1

4: 1/4" X 1 3/8" MINUMUM SILICONE BOND AT ALL GLAZING AND FRAMING OPTIONS

5: GLAZING FORMULA = D.L.O. + 2 3/4" HORIZONTALLY AND VERTICALLY. REFER TO D.L.O. ON SHOP DRAWINGS FOR DIMENSION (H) AND (W)

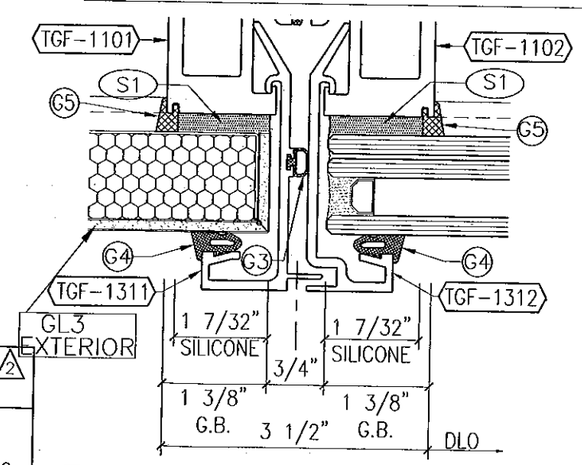

1 VERTICAL BOND WIDTH AND GLASS BITE

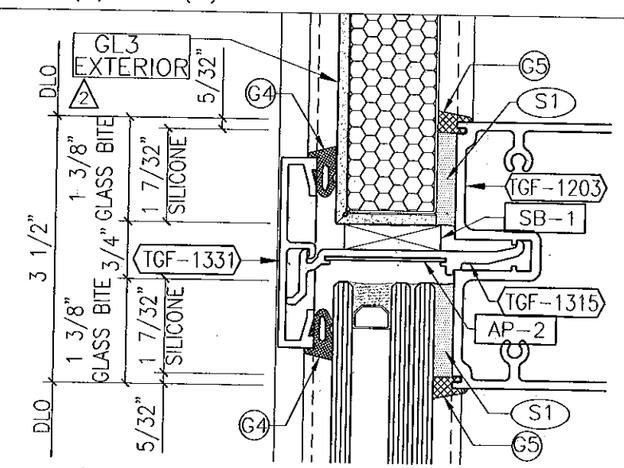

1 HORIZONTAL BOND WIDTH AND GLASS BITE

GLAZING OPTIONS	MAXIMUM TESTED GLASS AND PANELS 2	
GL1 — 1/2" AIR SPACE — 1/4" HS / .035 SENTRYGLAS–MDCA 1 / 1/4" HS / 1/4" TEMPERED	59.25" X 99.125" = 40.79 SQ. FT.	+130/−130
GL2 — 1/4" HS / .035 SENTRYGLAS–MDCA 1 / 1/4" HS	59.25" X 99.125" = 40.79 SQ. FT.	+130/−130
GL3 — .060 ALUM. PAN / 1" RIGID INSULATION / 4MM COMPOSITE METAL — 2 EXTERIOR	59.25" X 74.875" = 30.81 SQ. FT.	+130/−130
GL4 — 1/4" HS / .060 SAFLEX IIIG PVB / 1/4" HS	59.25" X 98.875" = 40.68 SQ. FT.	+130/−130

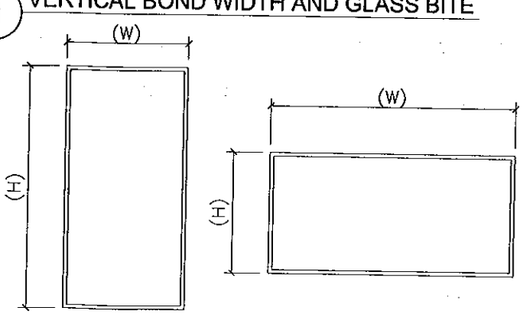

FOR MIAMI-DADE CO. B.C.C.O.

Approved as complying with the Florida Building Code
Date 10/20/2011
NOA# 11-0826.05
Miami Dade Product Control
By

JEFFREY H MARSH
LICENSE
No 70018
STATE OF FLORIDA
PROFESSIONAL ENGINEER
10/5/2011

GLASS COMPANY
1101 13TH STREET WEST RIVIERA BEACH, FLORIDA 33404
PH. (561) 863-7078 FAX (561) 863-7088
www.trainorglass.com
TRAINOR
ILLINOIS FLORIDA GEORGIA NEW JERSEY COLORADO TEXAS ARIZONA VIRGINIA MARYLAND

REVISIONS

NO.	DATE	BY	
1	8/22/11	BG	UPDATED INDEX LINES DESCRIPTIONS AND ADDED NEW GLASS BITE.
2	9/28/11	BG	ADDED COMMENTS BITE.
3			
4			
5			

DESIGN ENGINEERING & CONSULTING Inc.
3005 N. COLLINS BLVD. PH. 972-644-5661
RICHARDSON, TEXAS 75080 FAX 972-644-4034

Date	Scale
3-3-11	HALF

Drawing No
4326439

Drawing Title
130 PSF SMALL MISSILE IMPACT GLASS CHART

Sheet No
5 / 41

Mullion Span Chart with End Reactions (lbf)

WL (+/-) = 130 psf

Module (in.) M_T, M_O, M_I, M_J	Mull Height H (in.)	Mull Type 1	Jamb Type 2	Jamb Type 3	Corner Type 4	Corner Type 5
54	96	2340	1170	1170	1655	1655
57		2470	1235	1235	1747	1747
60		2600	1300	1300	1838	1838
54	102	2486	1243	1243	1758	1758
57		2624	1312	1312	1856	1856
60		2763	1381	1381	1953	1953
54	114	2779	1389	1389	1965	1965
57		2933	1467	1467	2074	2074
60		3088	1544	1544	2183	2183
54	120	2925	1463	1463	2068	2068
57		3088	1544	1544	2183	2183
60		3250	1625	1625	2298	2298
54	132	3218	1609	1609	2275	2275
57		3396	1698	1698	2401	2401
60		3575	1788	1788	2528	2528
54	144	3510	1755	1755	2482	2482
57		3705	1853	1853	2620	2620
60		3900	1950	1950	2758	2758
54	156	3803	1901	1901	2689	2689
57		4014	2007	2007	2838	2838
60		4225	2113	2113	2987	2987

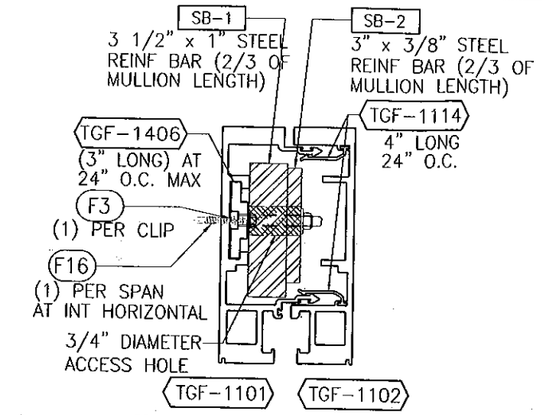

1 MULLION TYPE #2
TGF-1101 AND TGF-1102
(WITH REINFORCING)
ALUMINUM Ixx = 44.813 IN^4
Sxx = 14.756 IN^3

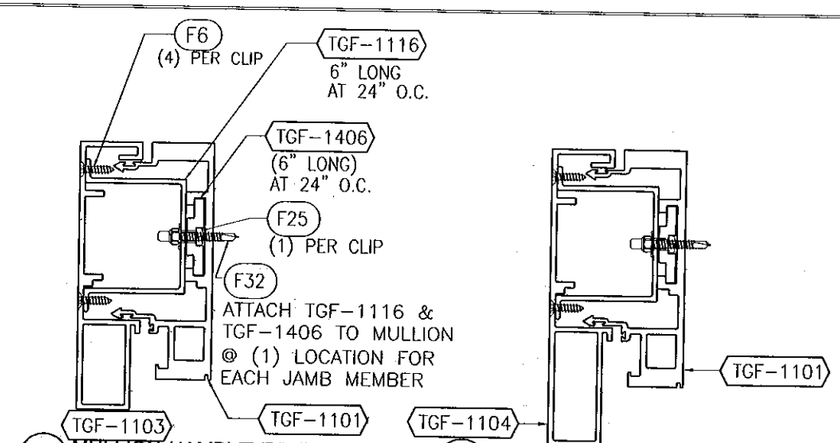

2 MULLION (JAMB) TYPE #3
TGF-1101 AND TGF-1103/TGF-1116
(WITHOUT REINFORCING)
ALUMINUM Ixx = 27.956 IN^4
Sxx = 8.404 IN^3

3 MULLION (JAMB) TYPE #4
TGF-1101 AND TGF-1103/TGF-1116
(WITHOUT REINFORCING)
ALUMINUM Ixx = 30.986 IN^4
Sxx = 8.907 IN^3

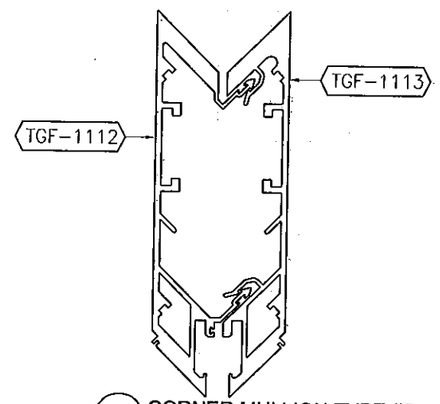

4 CORNER MULLION TYPE #5
TGF-1112 AND TGF-1113
(WITHOUT REINFORCING)
ALUMINUM Ixx = 91.202 IN^4
Sxx = 17.443 IN^3

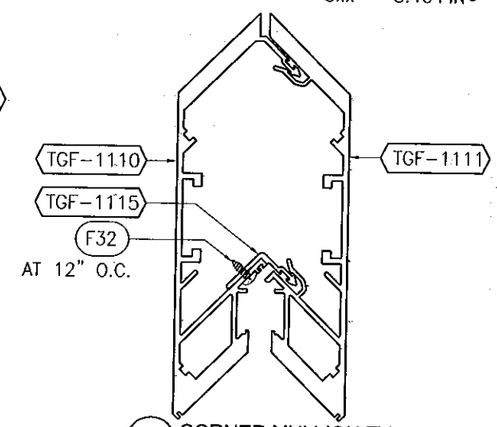

5 CORNER MULLION TYPE #6
TGF-1110 AND TGF-1111
(WITHOUT REINFORCING)
ALUMINUM Ixx = 103.923 IN^4
Sxx = 18.06 IN^3

GENERAL NOTES:

H = MAXIMUM MULLION SPAN

M_T = MAXIMUM COMBINED MODULES $\frac{W1 + W2}{2}$

M_I = MAXIMUM INSIDE CORNER MODULE

M_O = MAXIMUM OUTSIDE CORNER MODULE

M_J = MAXIMUM JAMB MODULE

W1 = TYPICAL MODULE

W2 = TYPICAL MODULE

- FOR SINGLE SPAN MAXIMUM DEFLECTION = L/180 OR 1" (WHICHEVER IS LESS)
- SPANS ARE LIMITED BY MAXIMUM TESTED END REACTIONS

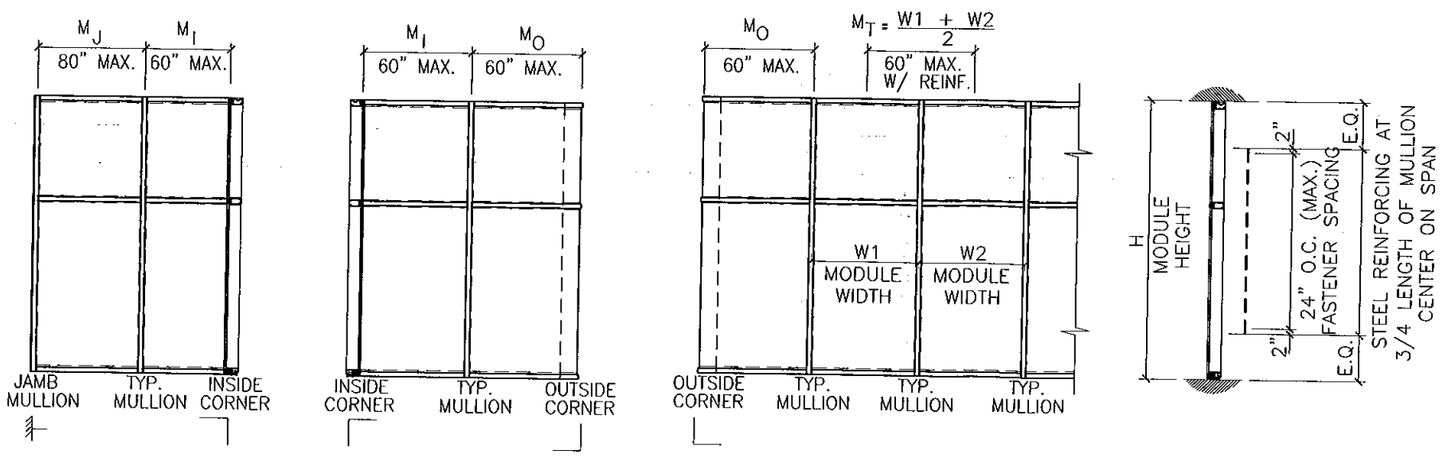

FOR MIAMI-DADE CO. B.C.C.O.

Approved as complying with the Florida Building Code
Date 10/20/2011
NOA# 11-0401.05
Miami-Dade Product Control
By

JEFFREY H MARSH
LICENSE
No 70018
STATE OF
FLORIDA
PROFESSIONAL ENGINEER
10/5/2011

GLASS COMPANY
1101 13TH STREET WEST RIVIERA BEACH, FLORIDA 33404
PH. (561) 863-7078 FAX (561) 863-7088
www.trainorglass.com
TRAINOR
ILLINOIS FLORIDA GEORGIA NEW JERSEY COLORADO TEXAS ARIZONA VIRGINIA MARYLAND

REVISIONS

NO.	DATE	BY
1		
2		
3		
4		
5		

DESIGN ENGINEERING & CONSULTING Inc.
2800 N. COLLINS BLVD. - SUITE 130 ARLINGTON, TEXAS 76006
PH. 972-444-0944 FAX. 972-444-4094

Date	Scale
3-3-11	HALF

Drawing No 4326439

Drawing Title
130 PSF
SMALL MISSILE IMPACT
MULLION CHART

Sheet No 6 / 41

Multi-Span w/ Stack Horizontal Application and Support Reactions (lbf)

	WL (+/-) =	130 psf			
	Mull	Jamb	Jamb	Corner	Corner
	Type 1	Type 2	Type 3	Type 4	Type 5
M_T	L / R	L / R	L / R	L / R	L / R
3'-0"	14'-0" / 15'-0"	14'-0" / 15'-0"	14'-0" / 15'-0"	14'-0" / 15'-0"	14'-0" / 15'-0"
R_S	2408	1204	1204	1703	1703
R_M	6244	3122	3122	4415	4415
R_H	2578	1289	1289	1823	1823
D	570	208	285	570	570
3'-6"	14'-0" / 15'-0"	14'-0" / 15'-0"	14'-0" / 15'-0"	14'-0" / 15'-0"	14'-0" / 15'-0"
R_S	2809	1405	1405	1986	1986
R_M	7285	3642	3642	5151	5151
R_H	3007	1504	1504	2126	2126
D	665	242	333	665	665
4'-0"	14'-0" / 15'-0"	14'-0" / 15'-0"	14'-0" / 15'-0"	14'-0" / 15'-0"	14'-0" / 15'-0"
R_S	3210	1605	1605	2270	2270
R_M	8326	4163	4163	5887	5887
R_H	3437	1718	1718	2430	2430
D	760	277	380	760	760
4'-6"	14'-0" / 15'-0"	14'-0" / 15'-0"	14'-0" / 15'-0"	14'-0" / 15'-0"	14'-0" / 15'-0"
R_S	3612	1806	1806	2554	2554
R_M	9366	4683	4683	6623	6623
R_H	3866	1933	1933	2734	2734
D	855	312	428	855	855
5'-0"	14'-0" / 15'-0"	14'-0" / 15'-0"	14'-0" / 15'-0"	14'-0" / 15'-0"	14'-0" / 15'-0"
R_S	4013	2007	2007	2838	2838
R_M	10407	5204	5204	7359	7359
R_H	4296	2148	2148	3038	3038
D	950	346	475	950	950

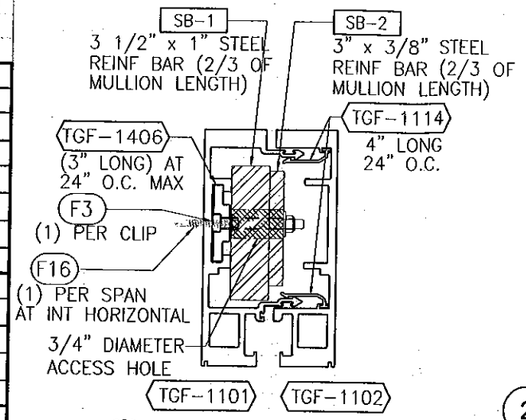

1 MULLION TYPE #2
TGF-1101 AND TGF-1102
(WITH REINFORCING)
ALUMINUM Ixx = 44.813 IN^4
Sxx = 14.756 IN^3

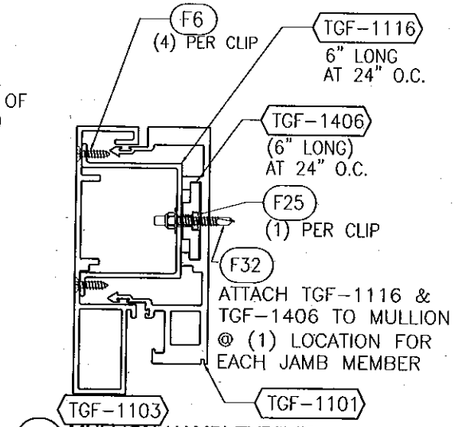

2 MULLION (JAMB) TYPE #3
TGF-1101 AND TGF-1103/TGF-1116
(WITHOUT REINFORCING)
ALUMINUM Ixx = 27.956 IN^4
Sxx = 8.404 IN^3

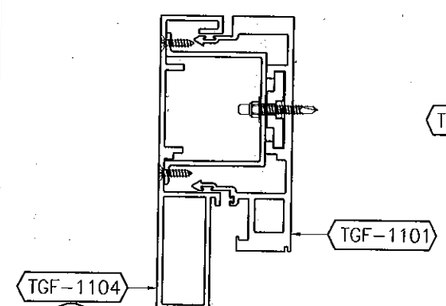

3 MULLION (JAMB) TYPE #4
TGF-1101 AND TGF-1103/TGF-1116
(WITHOUT REINFORCING)
ALUMINUM Ixx = 30.986 IN^4
Sxx = 8.907 IN^3

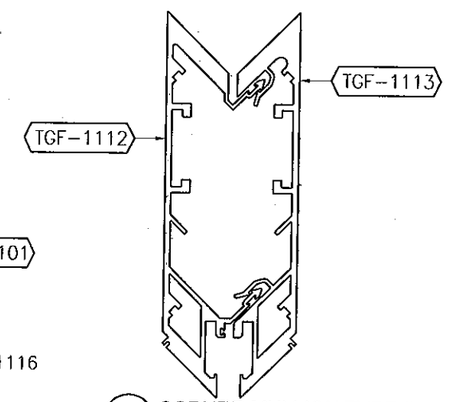

4 CORNER MULLION TYPE #5
TGF-1112 AND TGF-1113
(WITHOUT REINFORCING)
ALUMINUM Ixx = 91.202 IN^4
Sxx = 17.443 IN^3

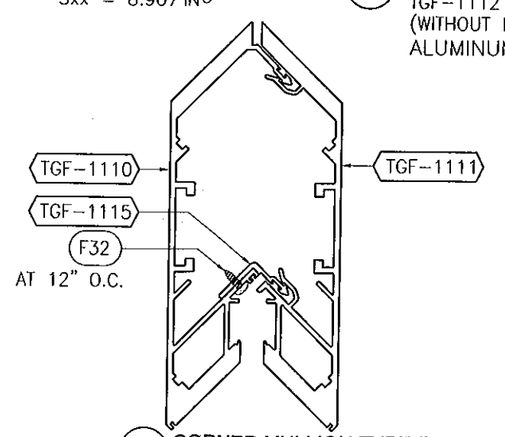

5 CORNER MULLION TYPE #6
TGF-1110 AND TGF-1111
(WITHOUT REINFORCING)
ALUMINUM Ixx = 103.923 IN^4
Sxx = 18.06 IN^3

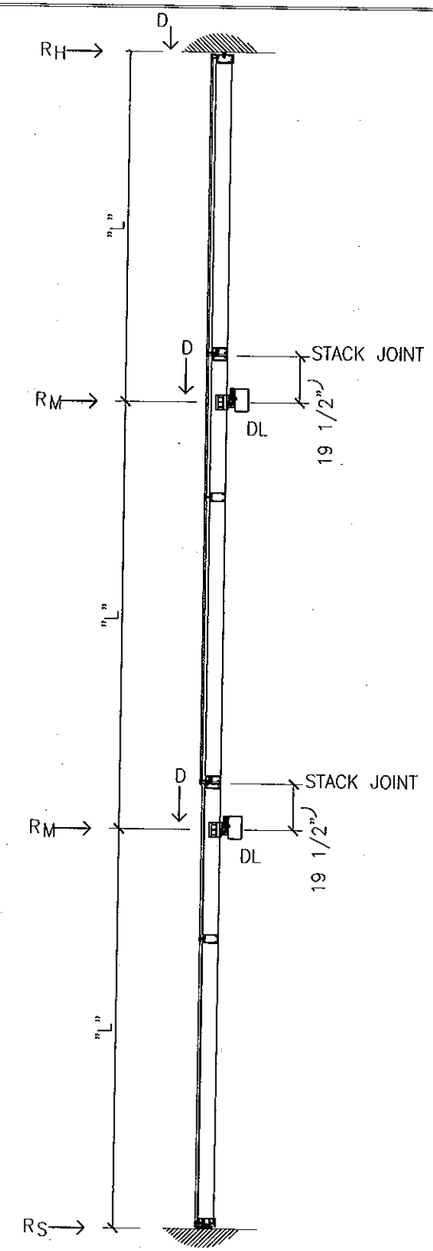

GENERAL NOTES:

L = DISTANCE BETWEEN ANCHOR POINTS
R_H = MAXIMUM REACTION AT HEAD ANCHOR
R_M = MAXIMUM REACTION AT MIDSPAN ANCHOR
R_S = MAXIMUM REACTION AT SILL ANCHOR
D = MAXIMUM DEAD LOAD REACTION
DL = DEAD LOAD ANCHOR POINT
WL = WIND LOAD ANCHOR POINT

- FOR MULTIPLE SPAN MAXIMUM DEFLECTION = L/180 OR 1" (WHICHEVER IS LESS)
- SPANS ARE LIMITED BY MAXIMUM TESTED END REACTIONS

FOR MIAMI-DADE CO. B.C.C.O.

Approved as complying with the Florida Building Code
Date 10/20/2011
NOA# 11-0401.05
Miami Dade Product Control
By

JEFFREY H MARSH
LICENSE
No 70018
STATE OF
FLORIDA
PROFESSIONAL ENGINEER
10/5/2011

GLASS COMPANY
1101 13TH STREET WEST RIVIERA BEACH, FLORIDA 33404
PH. (561) 863-7078 FAX (561) 863-7088
www.trainorglass.com
TRAINOR
ILLINOIS FLORIDA GEORGIA NEW JERSEY COLORADO TEXAS ARIZONA VIRGINIA MARYLAND

REVISIONS

NO.	DATE	BY

DESIGN ENGINEERING & CONSULTING Inc

Date	Scale
3-3-11	QUARTER

Drawing No 4326439

Drawing Title
130 PSF
SMALL MISSILE IMPACT
MULLION CHART

Sheet No
7 / 41

PERIMETER SEALANT OPTIONS

DOW CORNING 790 SILICONE
DOW CORNING 791 SILICONE
DOW CORNING 795 SILICONE
TREMCO SPECTRUM 2

ALTERNATE PERIMETER SEALANT TYPES AND JOINT SIZES SHALL BE DESIGNED AND APPROVED BY DESIGN PROFESSIONAL OF RECORD AND/OR THE SEALANT MANUFACTURER.

NOTE:
SEE SHEET 17 FOR ANCHORAGE CONDITIONS

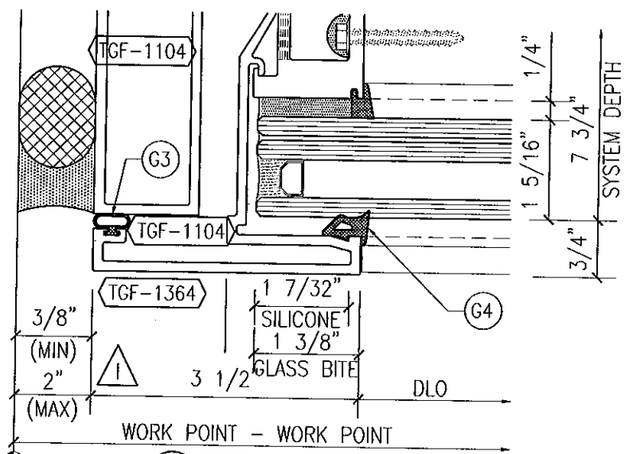

1 LEFT JAMB MULLION
w/ 1 5/16" GLASS & 3 1/2" FACE CAP

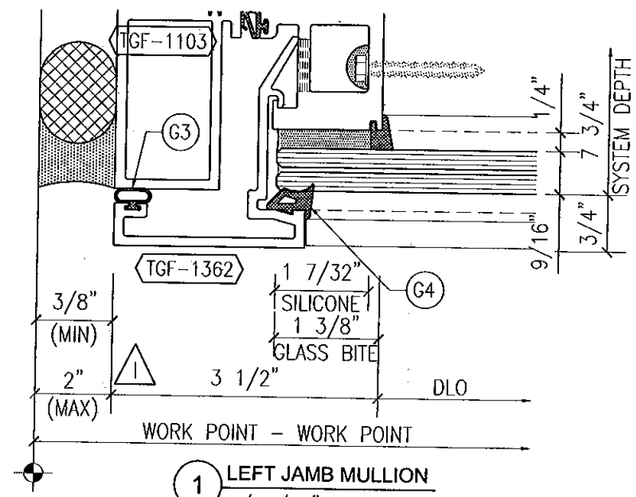

1 LEFT JAMB MULLION
w/ 9/16" GLASS

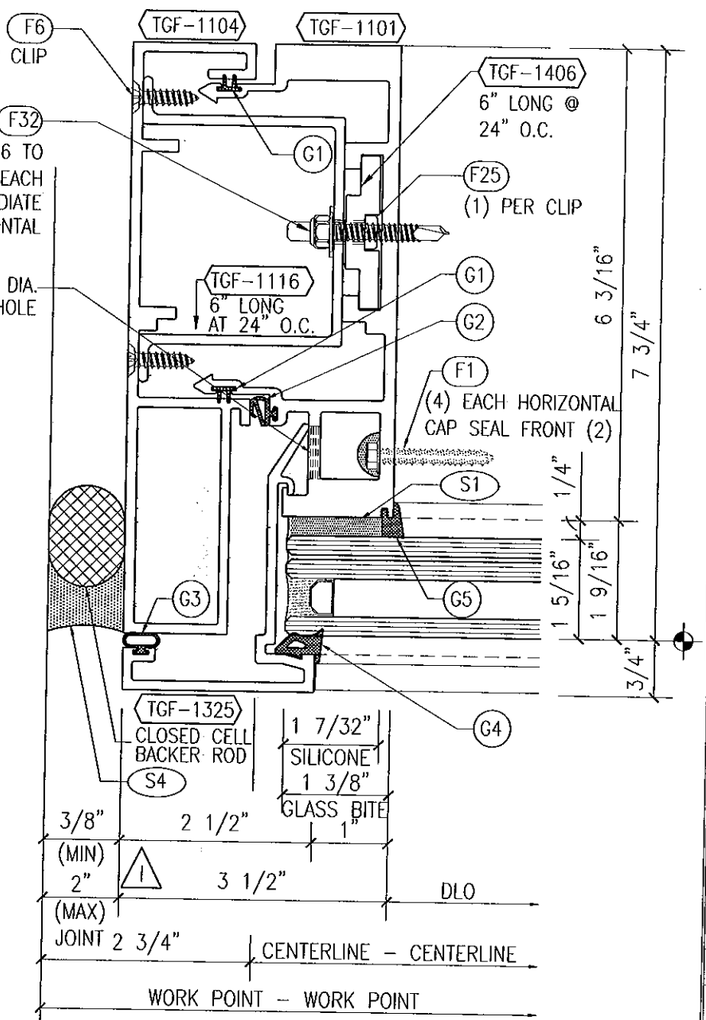

1 LEFT JAMB MULLION
w/ 1 5/16" GLASS

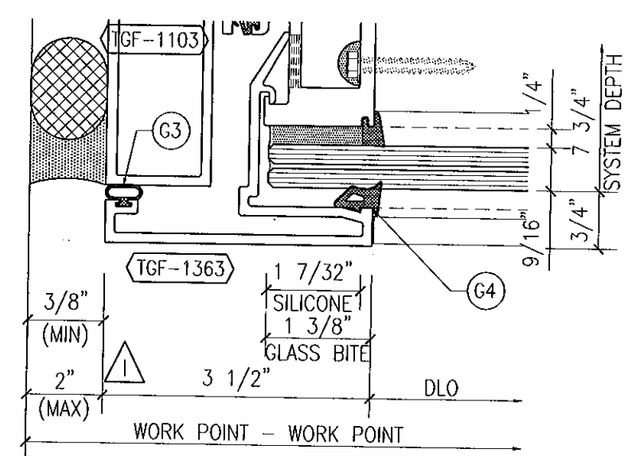

1 LEFT JAMB MULLION
w/ 9/16" GLASS & 3 1/2" FACE CAP

FOR MIAMI-DADE CO. B.C.C.O.

Approved as complying with the Florida Building Code
Date 10/20/2011
NOA# 11-0420.05
Miami Dade Product Control
By

JEFFREY H MARSH
LICENSE
No 70018
STATE OF FLORIDA
PROFESSIONAL ENGINEER
10/5/2011

GLASS COMPANY
1101 13TH STREET WEST RIVIERA BEACH, FLORIDA 33404
PH. (561) 863-7078 FAX (561) 863-7088
www.trainorglass.com
TRAINOR
ILLINOIS FLORIDA GEORGIA NEW JERSEY COLORADO TEXAS ARIZONA VIRGINIA MARYLAND

REVISIONS

NO.	DATE	BY	
1	9/14/11	EEC	UPDATED MISC. CLIENT REQUEST
2			
3			
4			
5			
6			

DESIGN ENGINEERING & CONSULTING Inc.
2000 N. COLLINS BLVD., SUITE 130 RICHARDSON, TEXAS 75080
PH. 972-644-5646 FAX 972-644-4824

Date	Scale
3-3-11	HALF

Drawing No
4326439

Drawing Title
130 PSF SMALL MISSILE IMPACT DETAILS

Sheet No
8 / 41

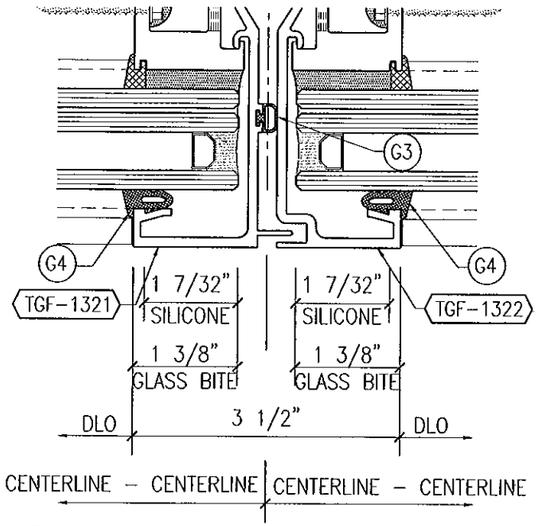

1 INTERMEDIATE MULLION
w/ 1 5/16" THICK GLASS & 3 1/2" FACE CAP

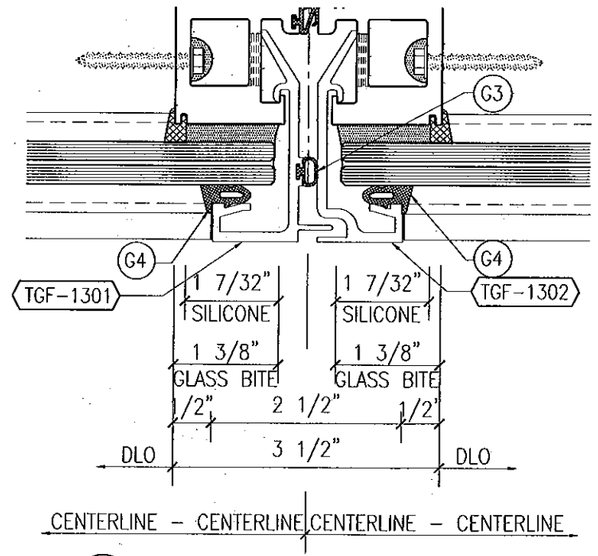

1 INTERMEDIATE MULLION
w/ 9/16" THICK GLASS & 2 1/2" FACE CAP

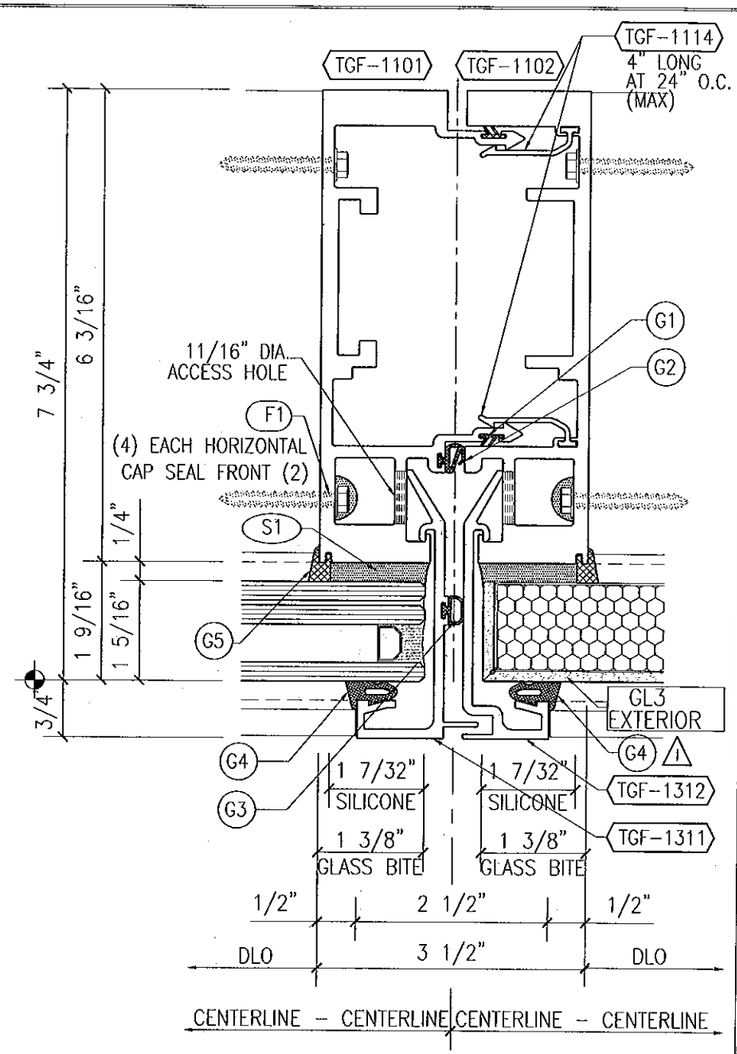

1 INTERMEDIATE MULLION
w/ 1 5/16" THICK GLASS OR COMPOSITE PANELS

NOTE:
SEE SHEET 18 FOR
ANCHORAGE CONDITIONS

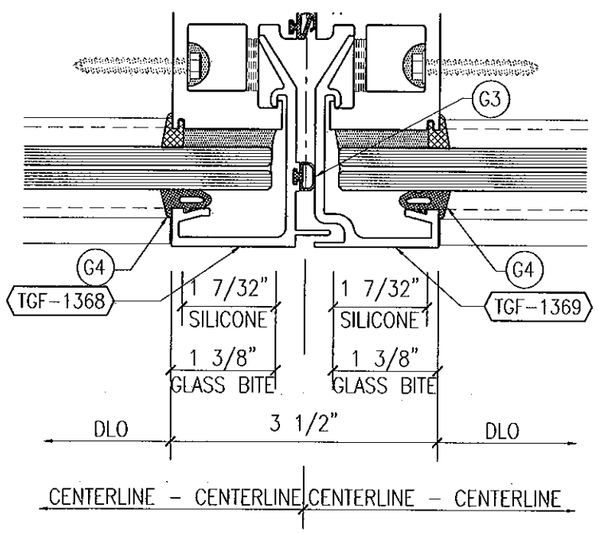

1 INTERMEDIATE MULLION
w/ 9/16" THICK GLASS & 3 1/2" FACE CAP

FOR MIAMI-DADE CO. B.C.C.O.

Approved as complying with the
Florida Building Code
Date 10/20/2011
NOA# 11-0401.05
Miami Dade Product Control
By

JEFFREY H MARSH
LICENSE
No 70018
STATE OF
FLORIDA
PROFESSIONAL ENGINEER
10/5/2011

TRAINOR
GLASS COMPANY
1101 13TH STREET WEST RIVIERA BEACH, FLORIDA 33404
PH. (561) 863-7078 FAX (561) 863-7088
www.trainorglass.com
ILLINOIS FLORIDA GEORGIA NEW JERSEY COLORADO TEXAS ARIZONA VIRGINIA MARYLAND

REVISIONS

NO.	DATE	BY	
1	10/03/11	JBC	ADDED NOTE FOR GL3 EXTERIOR
2			
3			
4			
5			
6			

DESIGN ENGINEERING & CONSULTING
2506 N. COLLINS BLVD. SUITE 100 ARLINGTON, TEXAS 75006
PH: 972-444-2440 FAX: 972-444-2424

Date	Scale
3-3-11	HALF

Drawing No
4326439

Drawing Title
130 PSF
SMALL MISSILE IMPACT
DETAILS

Sheet No
9 / 41

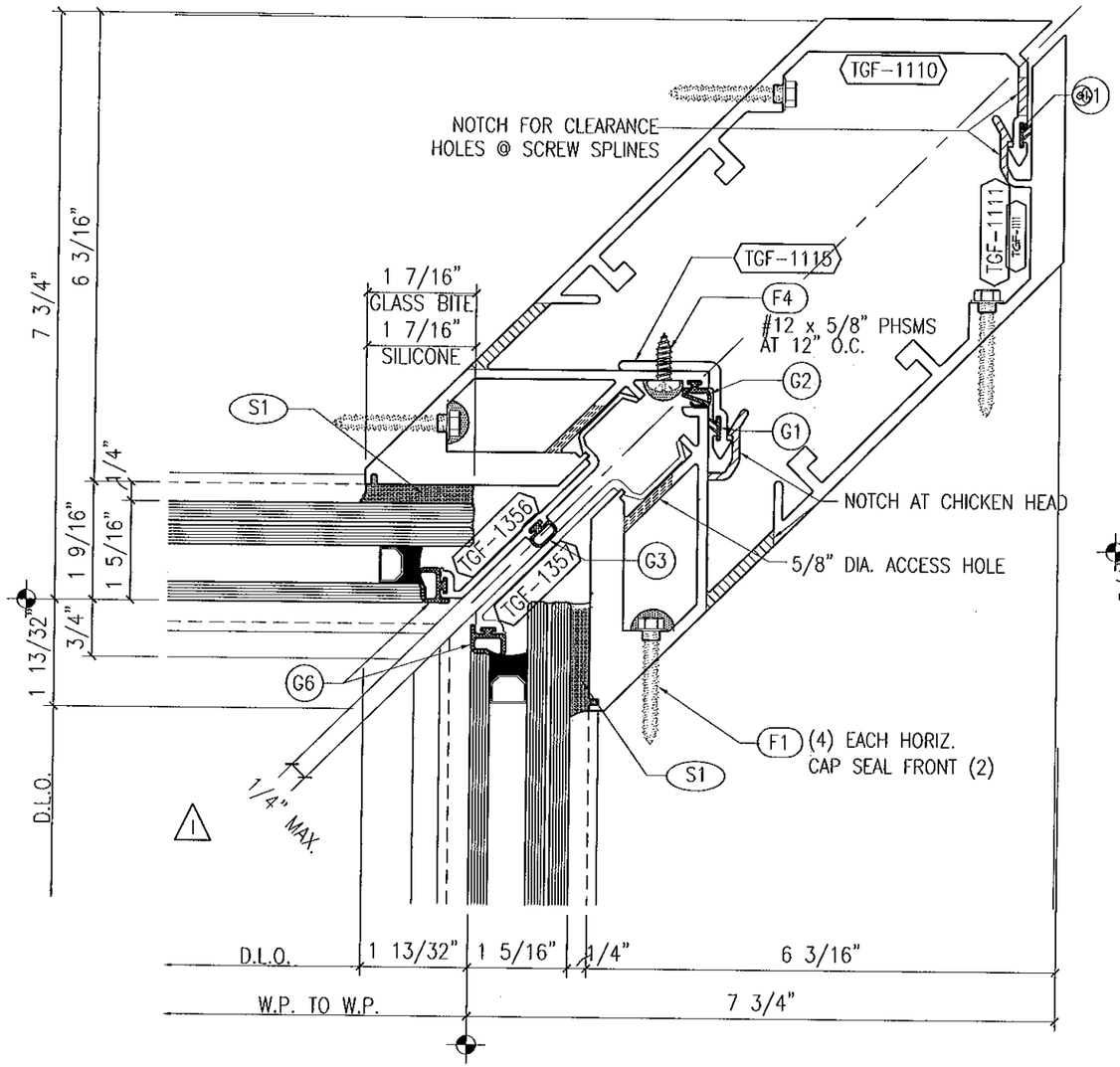

1 90° I.S. CORNER MULLION
w/ 1 5/16" THICK GLASS

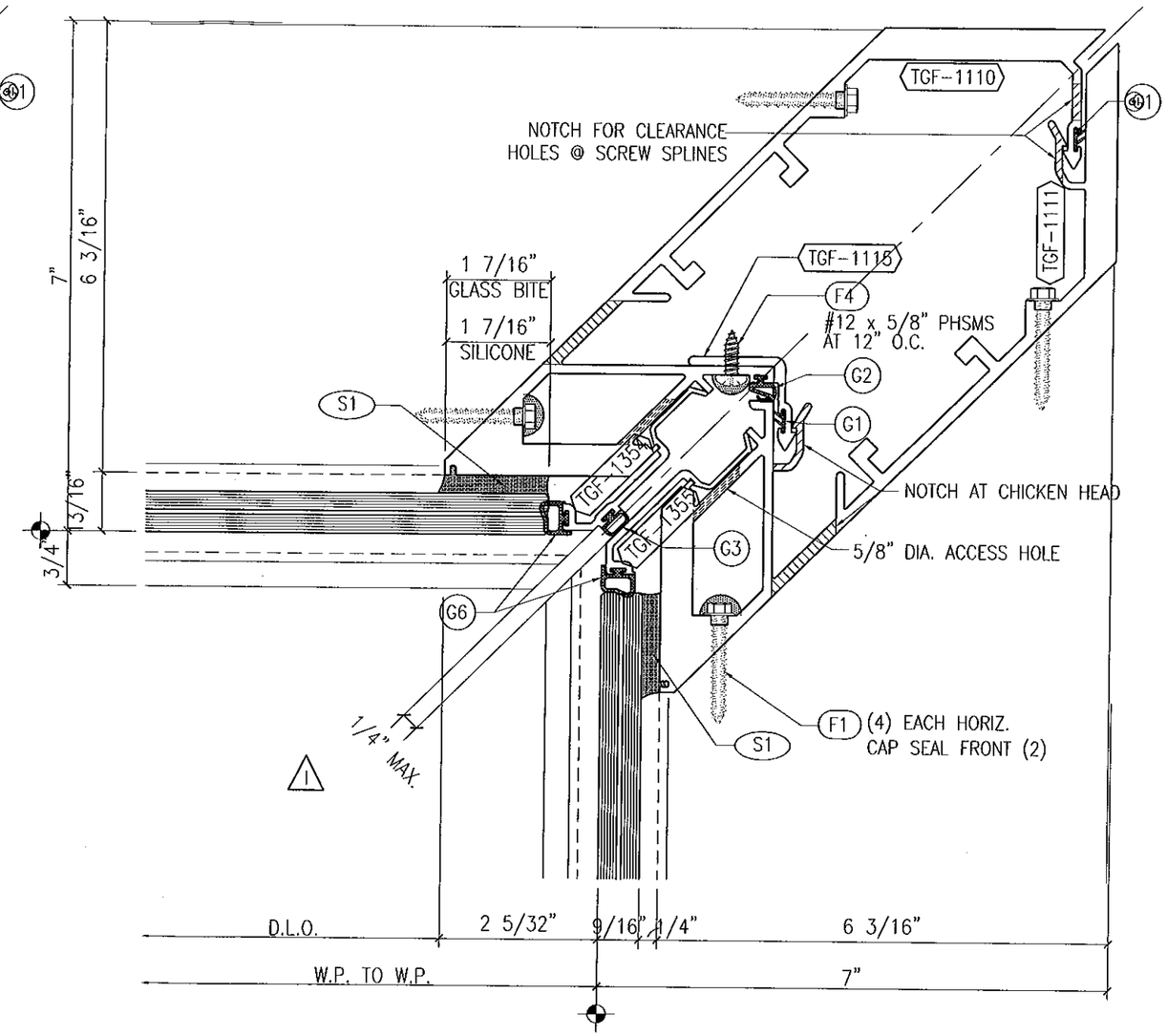

2 90° I.S. CORNER MULLION
w/ 9/16" THICK GLASS

NOTE:
SEE SHEET 19 FOR ANCHORAGE CONDITIONS

FOR MIAMI-DADE CO. B.C.C.O.

Approved as complying with the Florida Building Code
Date 10/20/2011
NOA# 11-0401.05
Miami Dade Product Control
By

JEFFREY H MARSH
LICENSE
No 70018
STATE OF FLORIDA
PROFESSIONAL ENGINEER
10/5/2011

TRAINOR GLASS COMPANY
1101 13TH STREET WEST RIVIERA BEACH, FLORIDA 33404
PH. (561) 863-7078 FAX (561) 863-7088
www.trainorglass.com
ILLINOIS FLORIDA GEORGIA NEW JERSEY COLORADO TEXAS ARIZONA VIRGINIA MARYLAND

REVISIONS

NO.	DATE	BY	
1	-	-	ADDED 1/4" MAX. CORNER AT DIM
2	-	-	
3	-	-	
4	-	-	
5	-	-	
6	-	-	

DESIGN ENGINEERING & CONSULTING
2205 N. COLLINS BLVD. - SUITE 100 RICHARDSON, TEXAS 75080
PH: 972-644-0640 FAX: 972-644-0264

Date	Scale
3-3-11	HALF

Drawing No
4326439

Drawing Title
130 PSF SMALL MISSILE IMPACT DETAILS

Sheet No
10 / 41

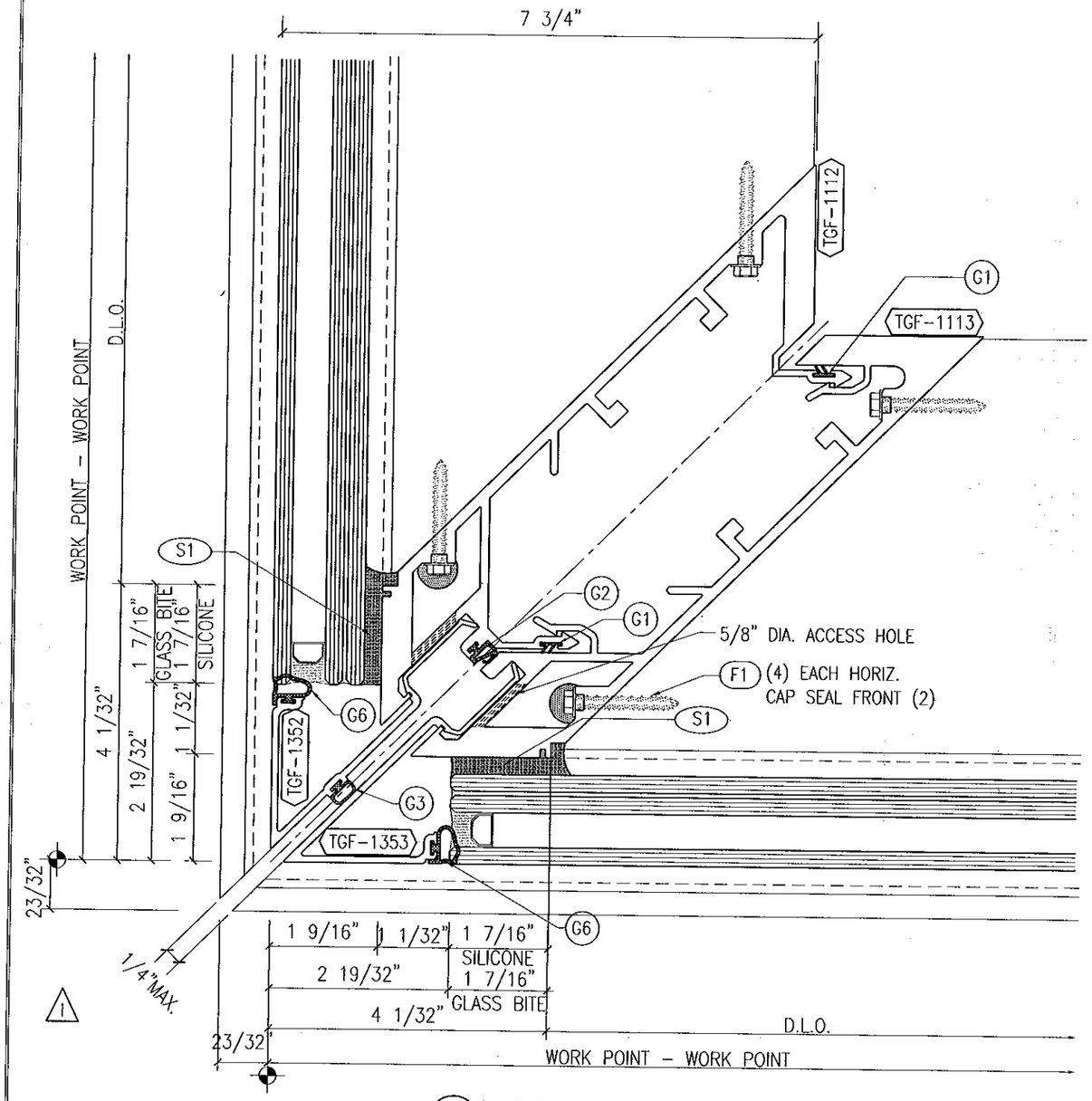

1 90 O.S. CORNER MULLION
w/ 1 5/16" THICK GLASS

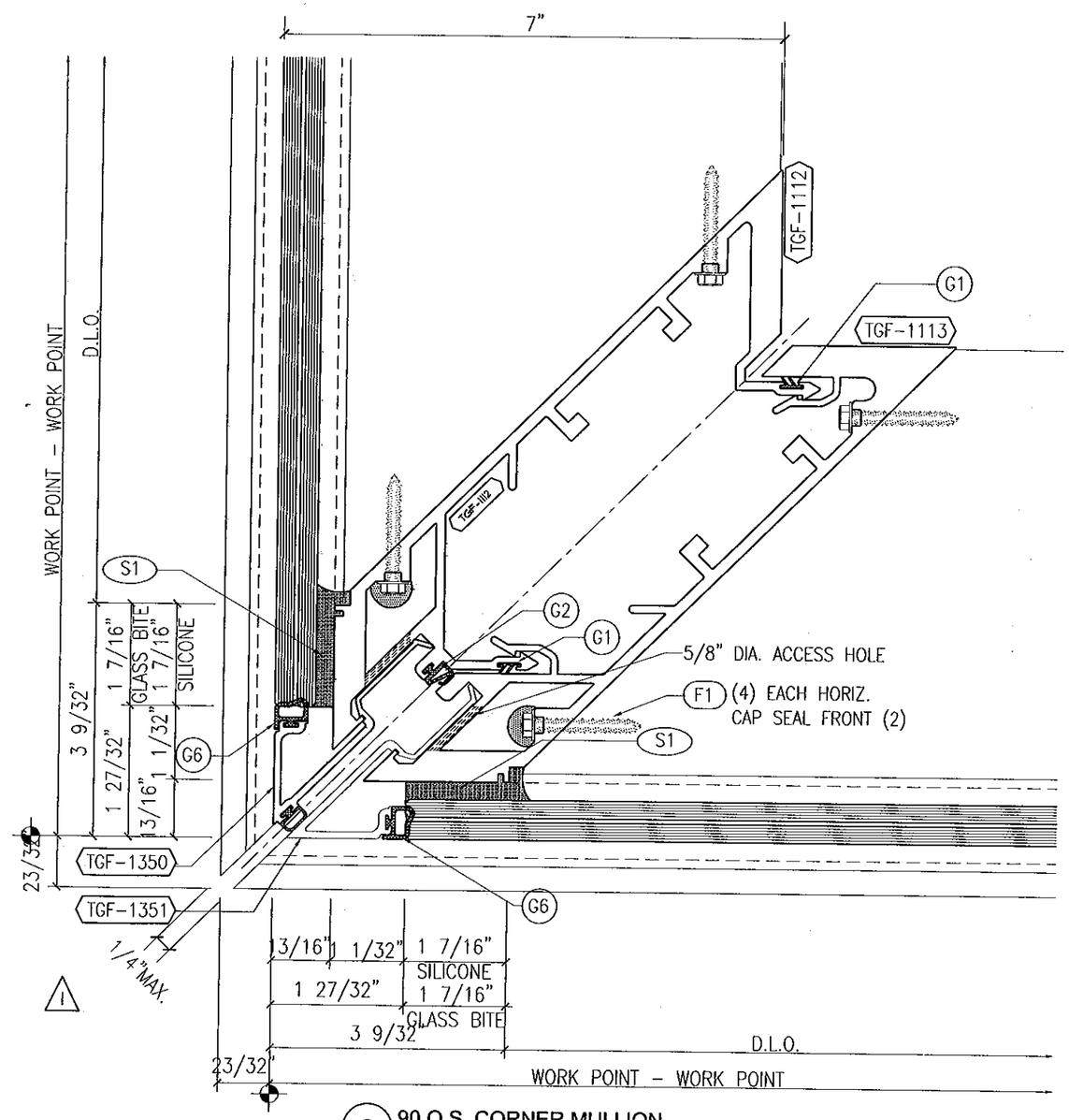

2 90 O.S. CORNER MULLION
w/ 9/16" THICK GLASS

NOTE:
SEE SHEET 20 & 21 FOR ANCHORAGE CONDITIONS

FOR MIAMI-DADE CO. B.C.C.O.

Approved as complying with the Florida Building Code
Date 12/20/2011
NOA# 11-0401.05
Miami Dade Product Control
By

JEFFREY H MARSH
LICENSE
No 70018
STATE OF
FLORIDA
PROFESSIONAL ENGINEER
10/5/2011

TRAINOR
GLASS COMPANY
1101 13TH STREET WEST RIVIERA BEACH, FLORIDA 33404
PH. (561) 863-7078 FAX (561) 863-7088
www.trainorglass.com
ILLINOIS FLORIDA GEORGIA NEW JERSEY COLORADO TEXAS ARIZONA VIRGINIA MARYLAND

REVISIONS

NO.	DATE	BY	
1			ADDED 1/4" MIN. CORNER AT DM
2			
3			
4			
5			
6			

DESIGN ENGINEERING & CONSULTING Inc
2500 N. COLLINS BLVD., SUITE 130
RICHARDSON, TEXAS 75080
PH: 972-644-9940
FAX: 972-644-1034

Date	Scale
3-3-11	HALF

Drawing No
4326439

Drawing Title
130 PSF
SMALL MISSILE IMPACT DETAILS

Sheet No
11 / 41

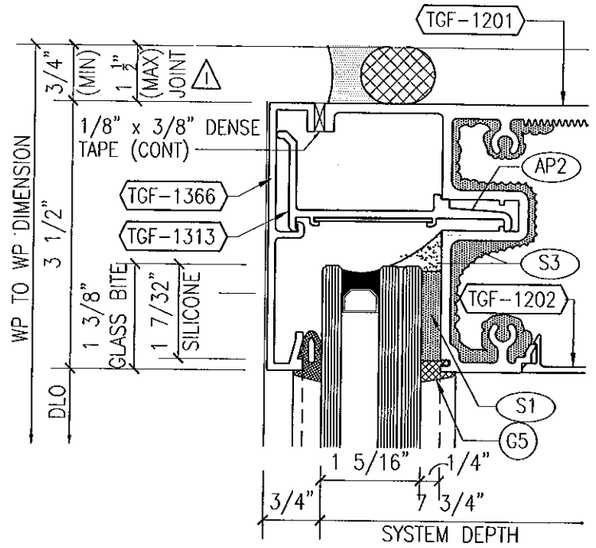

1 HEAD HORIZONTAL
w/ 1 5/16" THICK GLASS & 3 1/2" FACE CAP

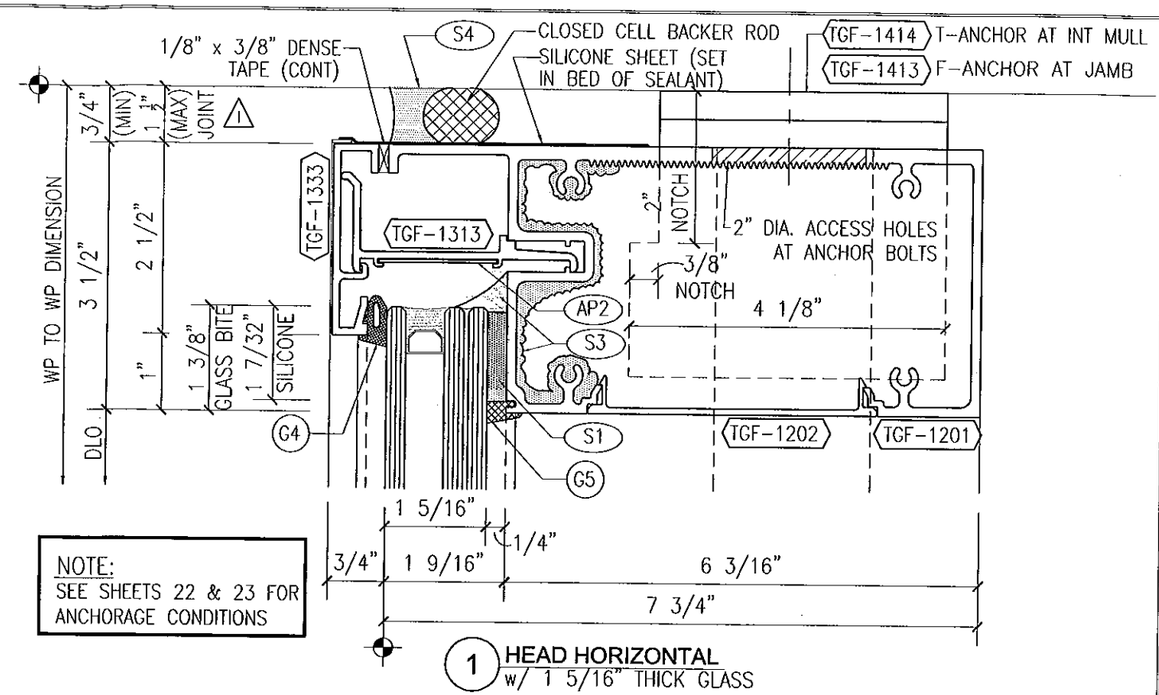

NOTE:
SEE SHEETS 22 & 23 FOR ANCHORAGE CONDITIONS

1 HEAD HORIZONTAL
w/ 1 5/16" THICK GLASS

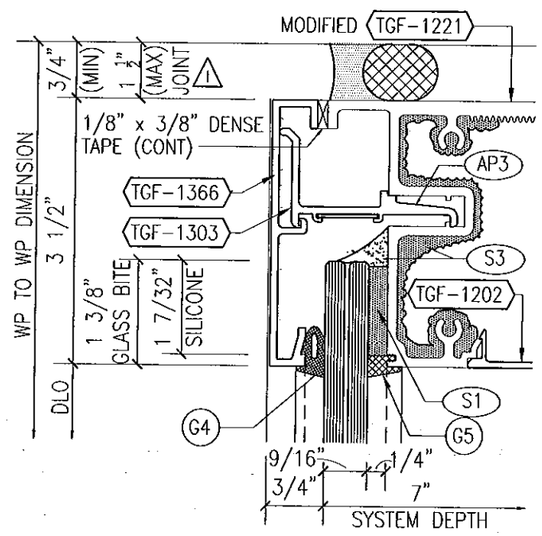

1 HEAD HORIZONTAL
w/ 9/16" THICK GLASS & 3 1/2" FACE CAP

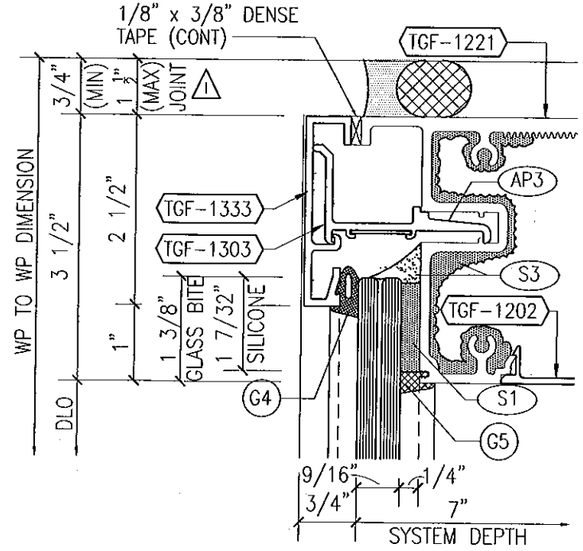

1 HEAD HORIZONTAL
w/ 9/16" THICK GLASS

PERIMETER SEALANT OPTIONS

DOW CORNING 790 SILICONE
DOW CORNING 791 SILICONE
DOW CORNING 795 SILICONE
TREMCO SPECTRUM 2

ALTERNATE PERIMETER SEALANT TYPES AND JOINT SIZES SHALL BE DESIGNED AND APPROVED BY DESIGN PROFESSIONAL OF RECORD AND/OR THE SEALANT MANUFACTURER.

FOR MIAMI-DADE CO. B.C.C.O.

Approved as complying with the Florida Building Code
Date 10/20/2011
NOA# 11-0220.05
Miami Dade Product Control
By

JEFFREY H MARSH
LICENSE
No 70018
STATE OF
FLORIDA
PROFESSIONAL ENGINEER
10/5/2011

TRAINOR GLASS COMPANY
1101 13TH STREET WEST RIVIERA BEACH, FLORIDA 33404
PH. (561) 863-7078 FAX (561) 863-7088
www.trainorglass.com
ILLINOIS FLORIDA GEORGIA NEW JERSEY COLORADO TEXAS ARIZONA VIRGINIA MARYLAND

REVISIONS

NO.	DATE	BY	
1	10/04/11	BG	UPDATED MIA-DADE NOA
2			
3			
4			
5			
6			

DESIGN ENGINEERING & CONSULTING Inc.
2205 S. CLEVELAND BLVD. - SUITE 100 FB: 972-544-2640
KENNEDALE, TEXAS 75060 FAX: 817-444-4284

Date	Scale
3-3-11	HALF

Drawing No: 4326439

Drawing Title: I 30 PSF SMALL MISSILE IMPACT DETAILS

Sheet No: 12 / 41

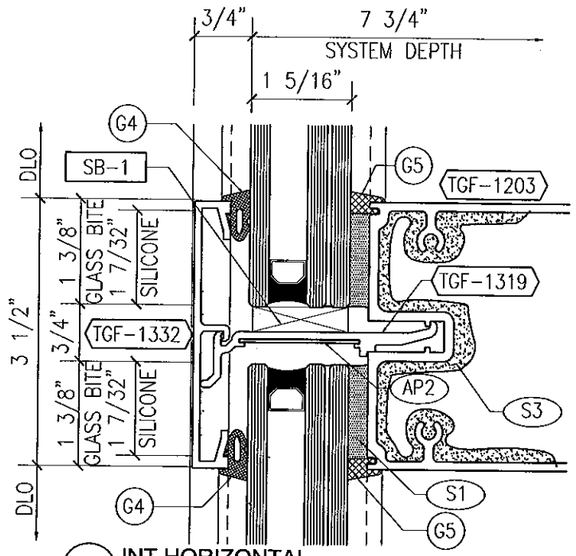

1 INT HORIZONTAL
w/ 1 5/16" GLASS & 3 1/2" FACE CAP

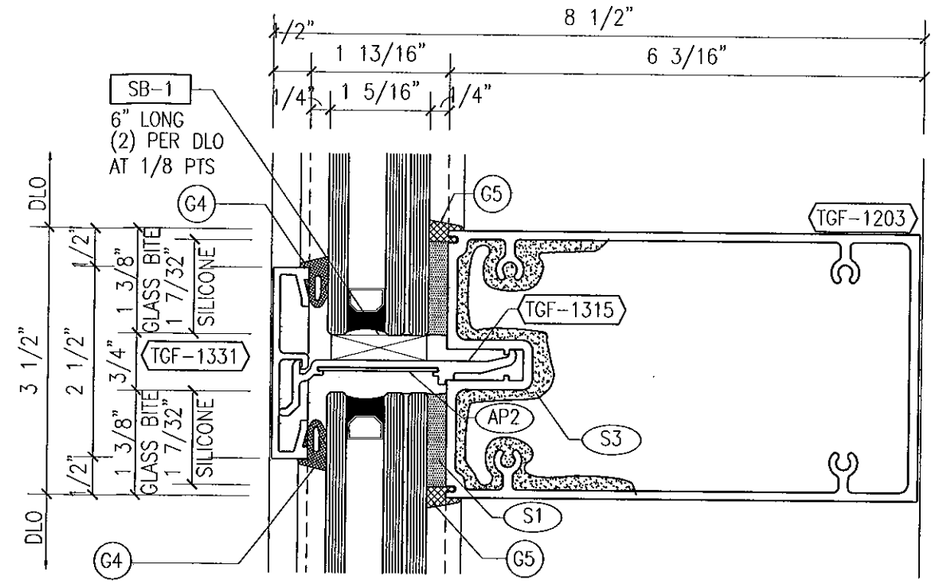

BUTT INTO VERT. GASKET
BUNCH @ CENTER OF DLO
SO GASKET IS ON COMP.

1 INTERMEDIATE HORIZONTAL
w/ 1 5/16" GLASS

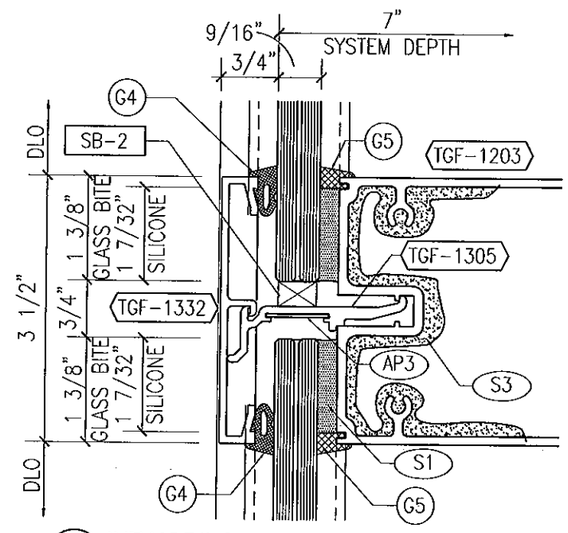

1 INT HORIZONTAL
w/ 9/16" GLASS & 3 1/2" FACE CAP

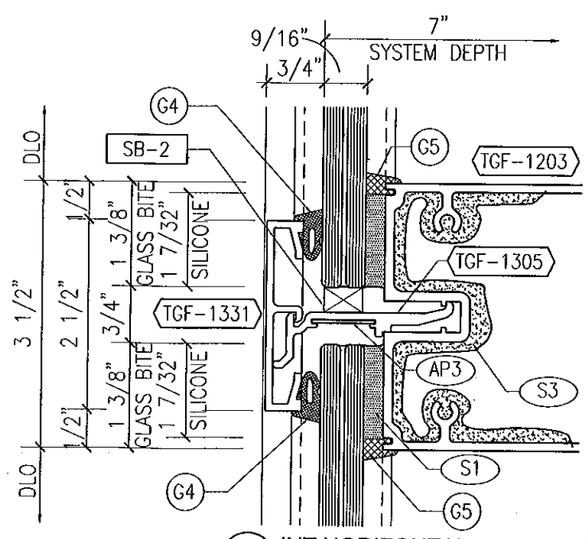

1 INT HORIZONTAL
w/ 9/16" GLASS

FOR MIAMI-DADE CO. B.C.C.O.

Approved as complying with the
Florida Building Code
Date 10/20/2011
NOA# 11-0201.05
Miami Dade Product Control
By

JEFFREY H MARSH
LICENSE
No 70018
STATE OF
FLORIDA
PROFESSIONAL ENGINEER
10/5/2011

TRAINOR GLASS COMPANY
1101 13TH STREET WEST RIVIERA BEACH, FLORIDA 33404
PH. (561) 863-7078 FAX (561) 863-7088
www.trainorglass.com
ILLINOIS FLORIDA GEORGIA NEW JERSEY COLORADO TEXAS ARIZONA VIRGINIA MARYLAND

REVISIONS

NO.	DATE	BY
1		
2		
3		
4		
5		
6		

DESIGN ENGINEERING & CONSULTING Inc.
3939 N. CENTRAL EXPY. - SUITE 100 PH. 972-644-3010
PLANO, TEXAS 75075 FAX: 972-644-3094

Date	Scale
3-3-11	HALF

Drawing No
4326439

Drawing Title
130 PSF
SMALL MISSILE IMPACT
DETAILS

Sheet No
13 / 41

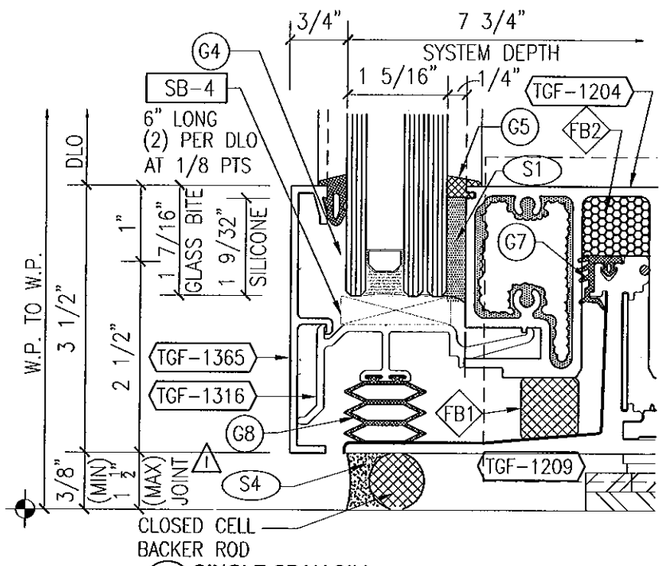

1 SINGLE-SPAN SILL
w/ 9/16" THICK GLASS & 3 1/2" FACE CAP

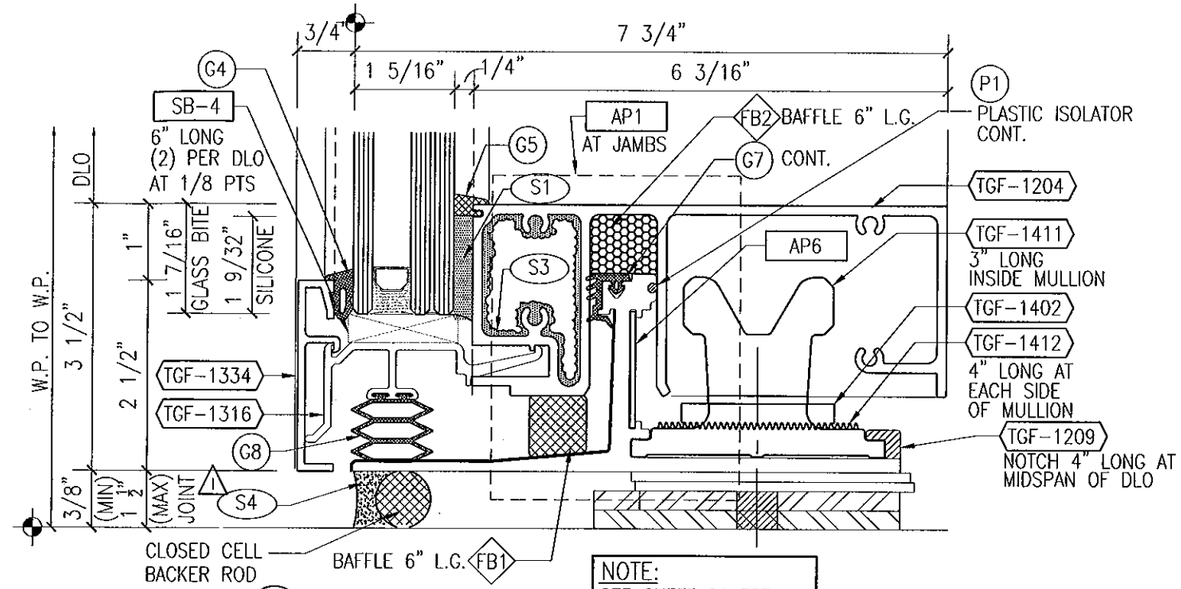

NOTE:
SEE SHEET 24 FOR
ANCHORAGE CONDITIONS

1 SINGLE-SPAN SILL
w/ 1 5/16" THICK GLASS

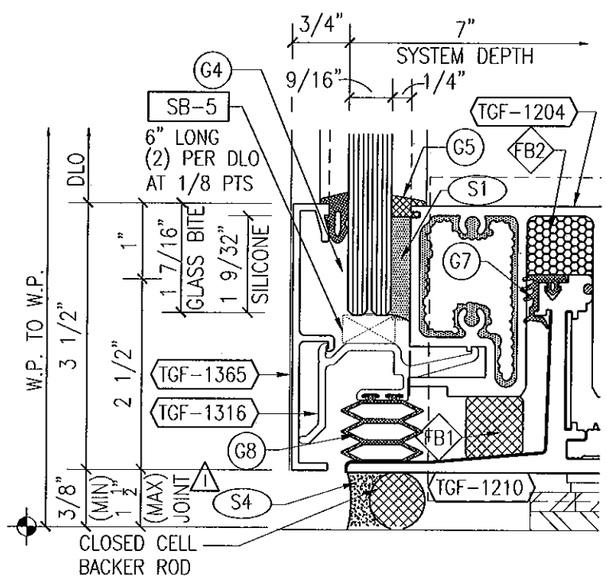

1 SINGLE-SPAN SILL
w/ 9/16" THICK GLASS & 3 1/2" FACE CAP

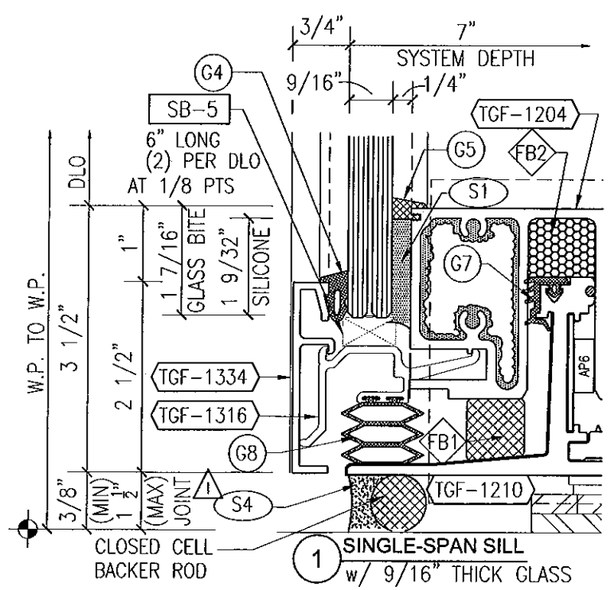

1 SINGLE-SPAN SILL
w/ 9/16" THICK GLASS

PERIMETER SEALANT OPTIONS

DOW CORNING 790 SILICONE
DOW CORNING 791 SILICONE
DOW CORNING 795 SILICONE
TREMCO SPECTRUM 2

ALTERNATE PERIMETER SEALANT TYPES AND JOINT SIZES SHALL BE DESIGNED AND APPROVED BY DESIGN PROFESSIONAL OF RECORD AND/OR THE SEALANT MANUFACTURER.

FOR MIAMI-DADE CO. B.C.C.O.

Approved as complying with the Florida Building Code
Date 10/20/2011
NOA# 11-0420\05
Miami Dade Product Control
By

JEFFREY H MARSH
LICENSE
No 70018
STATE OF FLORIDA
PROFESSIONAL ENGINEER
10/5/2011

GLASS COMPANY
1101 13TH STREET WEST RIVIERA BEACH, FLORIDA 33404
PH. (561) 863-7078 FAX (561) 863-7088
www.trainorglass.com
TRAINOR
ILLINOIS FLORIDA GEORGIA NEW JERSEY COLORADO TEXAS ARIZONA VIRGINIA MARYLAND

REVISIONS

NO.	DATE	BY	
1	10/05/11	DEC	UPGRADED MAX JOINT SIZE
2			
3			
4			
5			
6			

DESIGN ENGINEERING & CONSULTING
2005 N. COLLINS BLVD. - SUITE 100 PH: 972-444-2640
RICHARDSON, TEXAS 75080 FAX: 972-444-4234

Date	Scale
3-3-11	HALF

Drawing No
4326439

Drawing Title
130 PSF
SMALL MISSILE IMPACT DETAILS

Sheet No
14 / 41

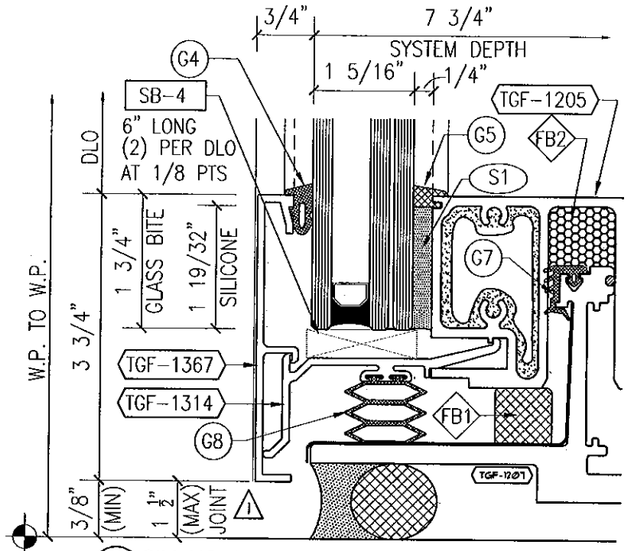

1 SILL HORIZONTAL
w/ 1 5/16" THICK GLASS & 3 3/4" FACE CAP

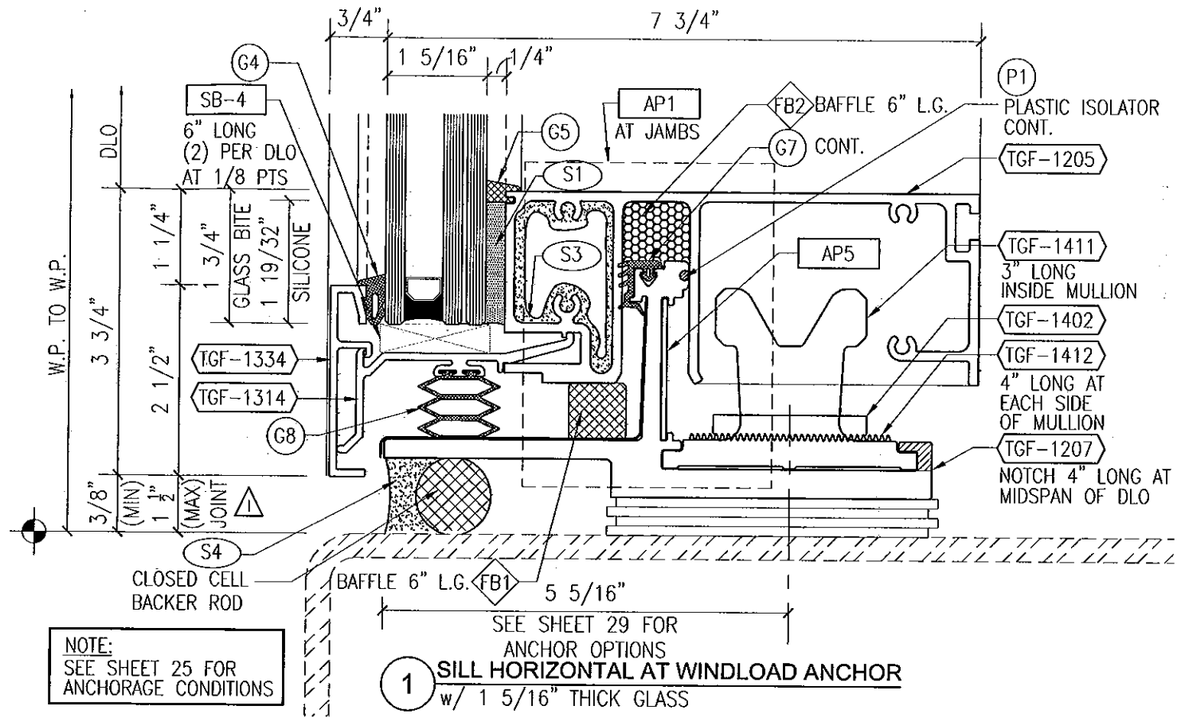

NOTE:
SEE SHEET 25 FOR
ANCHORAGE CONDITIONS

1 SILL HORIZONTAL AT WINDLOAD ANCHOR
w/ 1 5/16" THICK GLASS

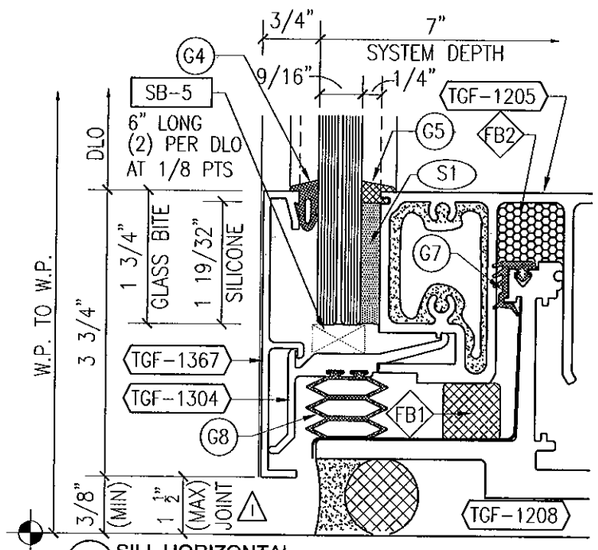

1 SILL HORIZONTAL
w/ 9/16" THICK GLASS & 3 3/4" FACE CAP

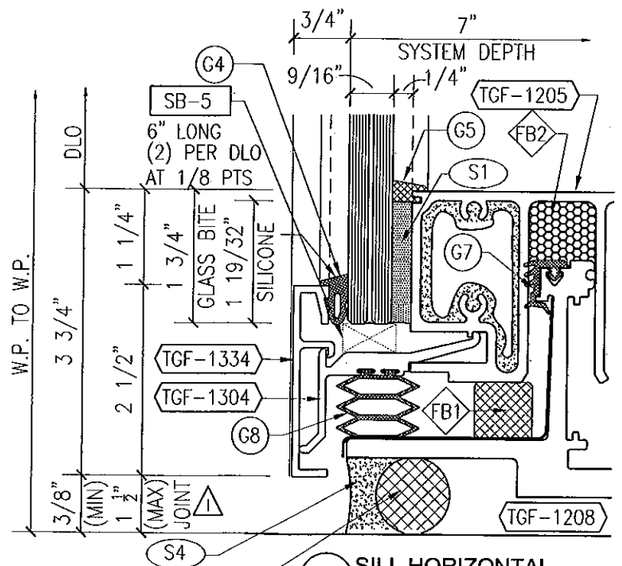

1 SILL HORIZONTAL
w/ 9/16" THICK GLASS

PERIMETER SEALANT OPTIONS

DOW CORNING 790 SILICONE
DOW CORNING 791 SILICONE
DOW CORNING 795 SILICONE
TREMCO SPECTRUM 2

ALTERNATE PERIMETER SEALANT TYPES AND JOINT SIZES SHALL BE DESIGNED AND APPROVED BY DESIGN PROFESSIONAL OF RECORD AND/OR THE SEALANT MANUFACTURER.

FOR MIAMI-DADE CO. B.C.C.O.

Approved as complying with the Florida Building Code
Date 10/26/2011
NOA# 11-0801.05
Miami-Dade Product Control
By

JEFFREY H MARSH
LICENSE
No 70018
STATE OF
FLORIDA
PROFESSIONAL ENGINEER
10/5/2011

TRAINOR GLASS COMPANY
1101 13TH STREET WEST RIVIERA BEACH, FLORIDA 33404
PH. (561) 863-7078 FAX (561) 863-7088
www.trainorglass.com
ILLINOIS FLORIDA GEORGIA NEW JERSEY COLORADO TEXAS ARIZONA VIRGINIA MARYLAND

REVISIONS

NO.	DATE	BY	
1	10/26/11	REC	UPDATED MIA-DADE NOA
2			
3			
4			
5			
6			

DESIGN ENGINEERING & CONSULTING Inc
2005 S. COUNTY RD. - SUITE 190
ROCKWOOD, TEXAS 75090
TEL 972-444-0400
FAX 972-444-0404

Date	Scale
3-3-11	HALF

Drawing No
4326439

Drawing Title
130 PSF
SMALL MISSILE IMPACT
DETAILS

Sheet No
15 / 41

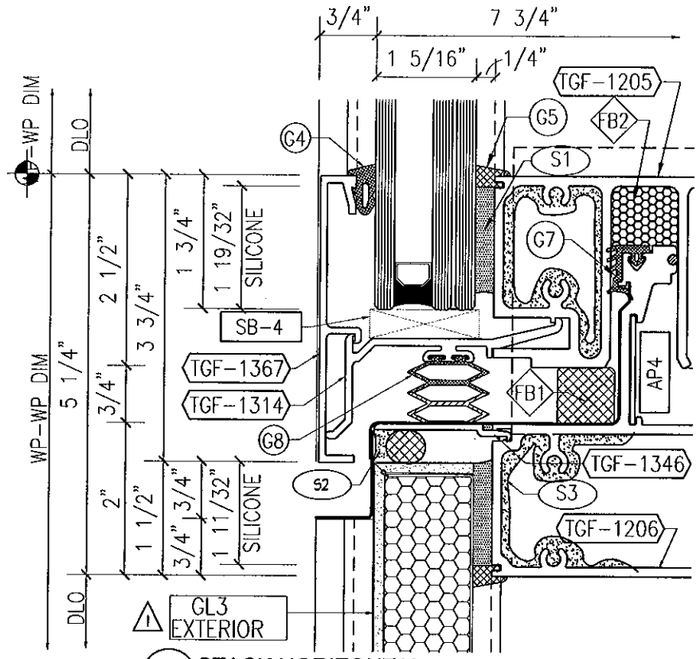

1 STACK HORIZONTAL
w/ 1 5/16" GLAZING & 3 3/4" FACE CAP

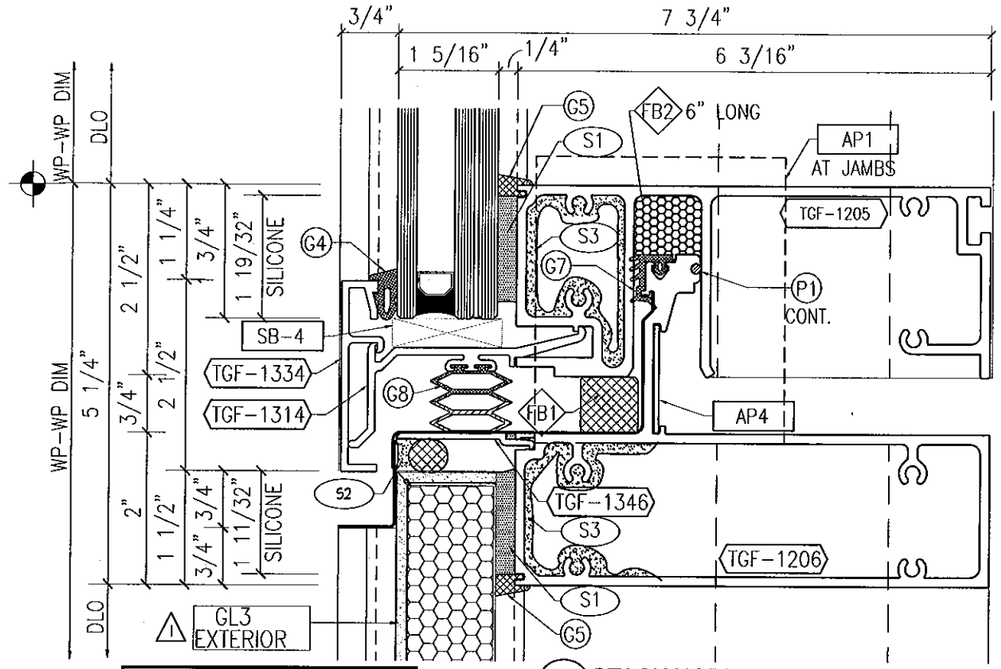

1 STACK HORIZONTAL
w/ 1 5/16" GLAZING

NOTE:
SEE SHEETS 17 THRU 21
FOR MIDSPAN ANCHORAGE
CONDITIONS (BENEATH STACK)

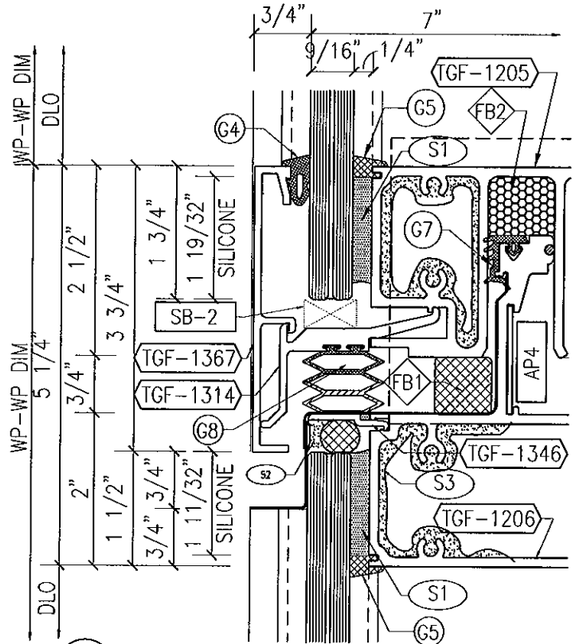

1 STACK HORIZONTAL
w/ 9/16" GLAZING & 3 3/4" FACE CAP

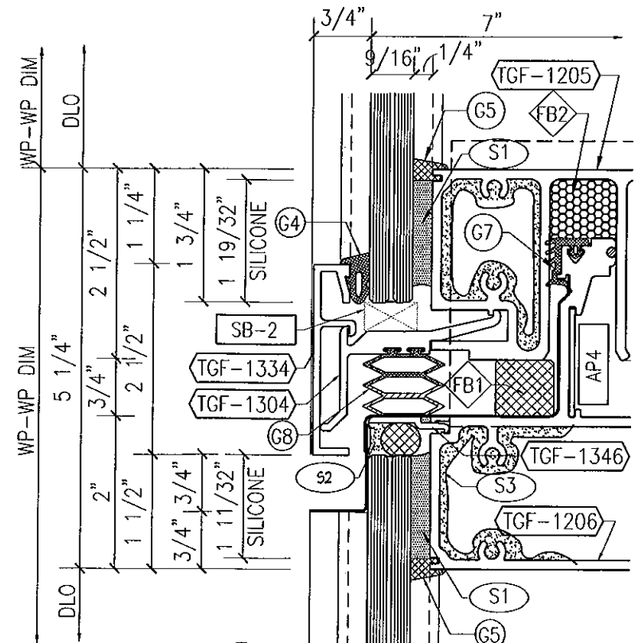

1 STACK HORIZONTAL
w/ 9/16" GLAZING

FOR MIAMI-DADE CO. B.C.C.O.

Approved as complying with the
Florida Building Code
Date 10/20/2011
NOA# 11-0401.05
Miami Dade Product Control
By

JEFFREY H MARSH
LICENSE
No 70018
STATE OF
FLORIDA
PROFESSIONAL ENGINEER
10/5/2011

TRAINOR
GLASS COMPANY
1101 13TH STREET WEST RIVIERA BEACH, FLORIDA 33404
PH. (561) 863-7078 FAX (561) 863-7088
www.trainorglass.com
ILLINOIS FLORIDA GEORGIA NEW JERSEY COLORADO TEXAS ARIZONA VIRGINIA MARYLAND

REVISIONS

NO.	DATE	BY	
1	10/05/11	DEC	ADDED NOTE FOR GLS EXTERIOR
2			
3			
4			
5			
6			

DESIGN ENGINEERING & CONSULTING

Date	Scale
3-3-11	HALF

Drawing No
4326439

Drawing Title
130 PSF
SMALL MISSILE IMPACT
DETAILS

Sheet No
16 / 41

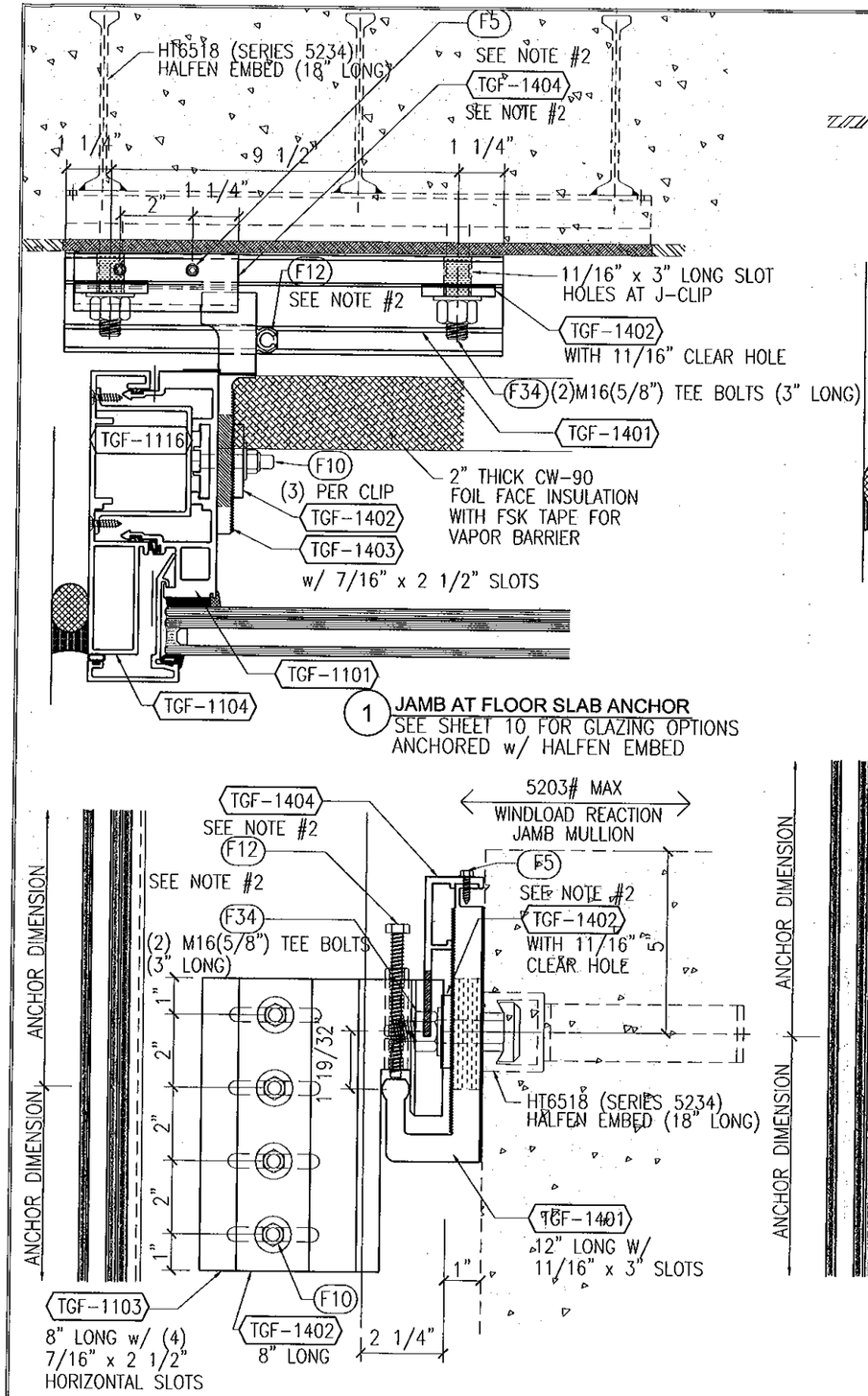

1 JAMB AT FLOOR SLAB ANCHOR
SEE SHEET 10 FOR GLAZING OPTIONS
ANCHORED w/ HALFEN EMBED

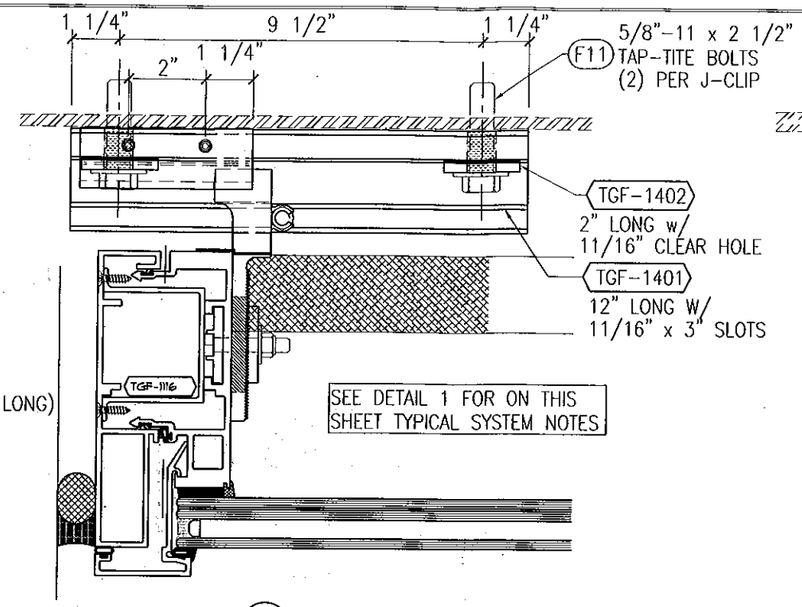

2 JAMB ANCHOR AT TUBE STEEL
SEE SHEET 10 FOR GLAZING OPTIONS
ANCHORED w/ 5/8" TAP-TITE BOLTS

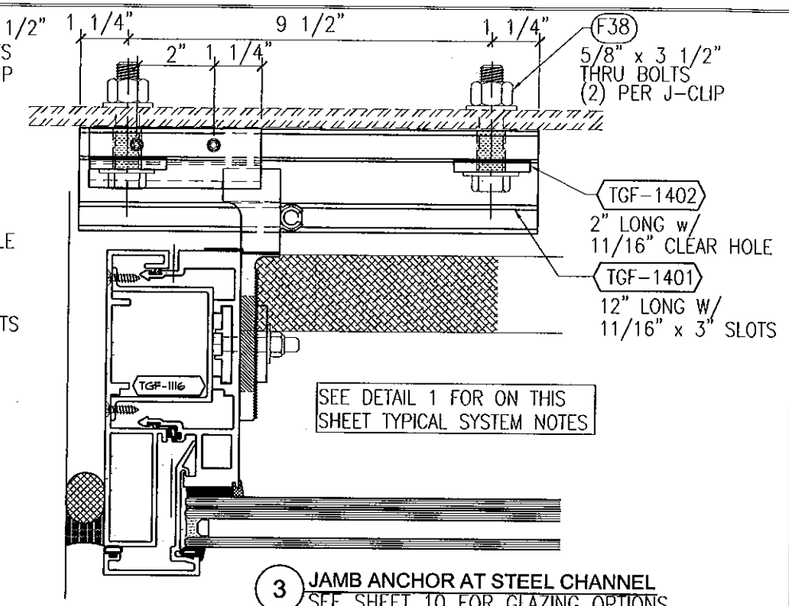

3 JAMB ANCHOR AT STEEL CHANNEL
SEE SHEET 10 FOR GLAZING OPTIONS
ANCHORED w/ 5/8" THRU BOLTS

1A DL ANCHOR AT FLOOR SLAB (SIDE VIEW)
SEE SHEET 10 FOR GLAZING OPTIONS
ANCHORED w/ HALFEN EMBED

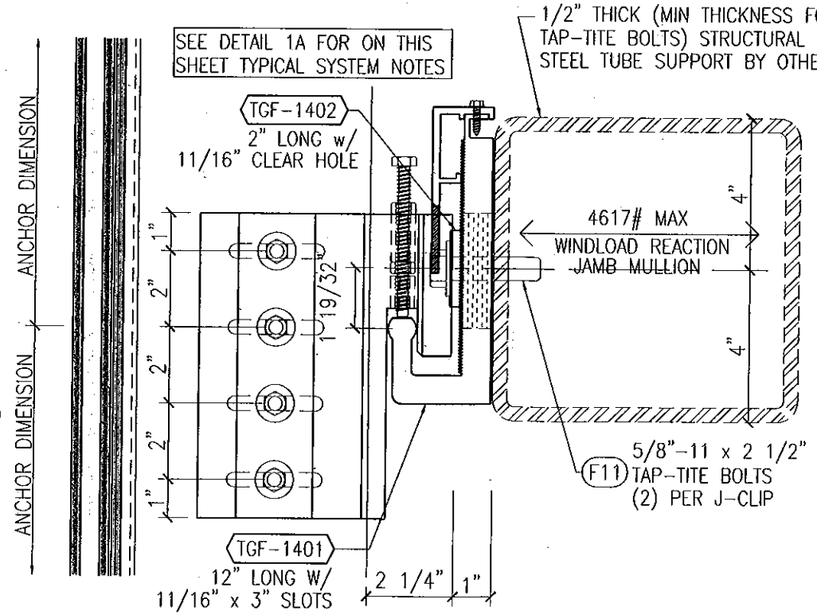

2A DL ANCHOR AT TUBE STEEL SUPPORT (SIDE VIEW)
SEE SHEET 10 FOR GLAZING OPTIONS
ANCHORED w/ 5/8" TAP-TITE BOLTS

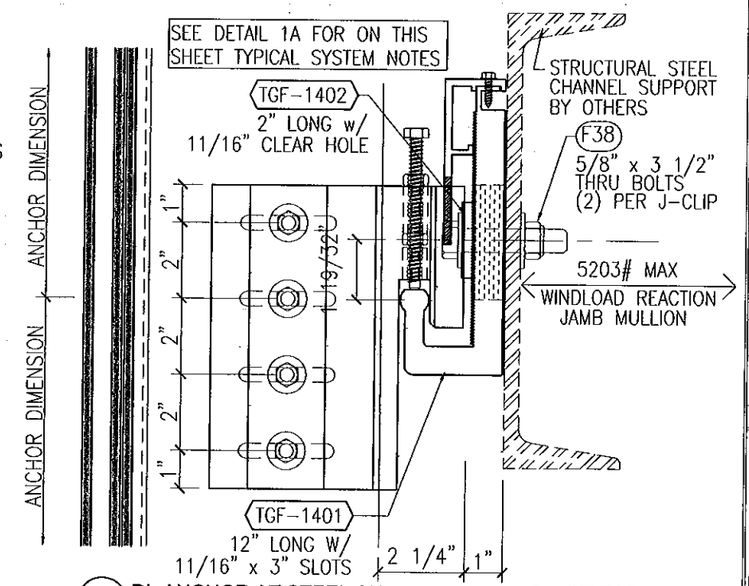

3A DL ANCHOR AT STEEL SUPPORT CHANNEL (SIDE VIEW)
SEE SHEET 10 FOR GLAZING OPTIONS
ANCHORED w/ 5/8" THRU BOLTS

NOTES:

1. SEE DETAILS ON SHEET 10 FOR BALANCE OF JAMB MULLION INFORMATION AND VARIOUS GLAZING OPTIONS
2. INDICATES FASTENERS AND PARTS ARE NOT REQUIRED FOR WINDLOAD ANCHOR CONDITIONS

FOR MIAMI-DADE CO. B.C.C.O.

Approved as complying with the Florida Building Code
Date 10/20/2011
NOA# 11-0801.05
Miami Dade Product Control
By

JEFFREY H MARSH
LICENSE
No 70018
STATE OF FLORIDA
PROFESSIONAL ENGINEER
10/5/2011

TRAINOR GLASS COMPANY
1101 13TH STREET WEST RIVIERA BEACH, FLORIDA 33404
PH. (561) 863-7078 FAX (561) 863-7088
www.trainorglass.com
ILLINOIS FLORIDA GEORGIA NEW JERSEY COLORADO TEXAS ARIZONA VIRGINIA MARYLAND

NO.	DATE	BY

REVISIONS

DESIGN ENGINEERING & CONSULTING Inc

Date	Scale
3-3-11	HALF

Drawing No
4326439

Drawing Title
130PSF SMALL MISSILE IMPACT ANCHOR DETAILS

Sheet No
17 / 41

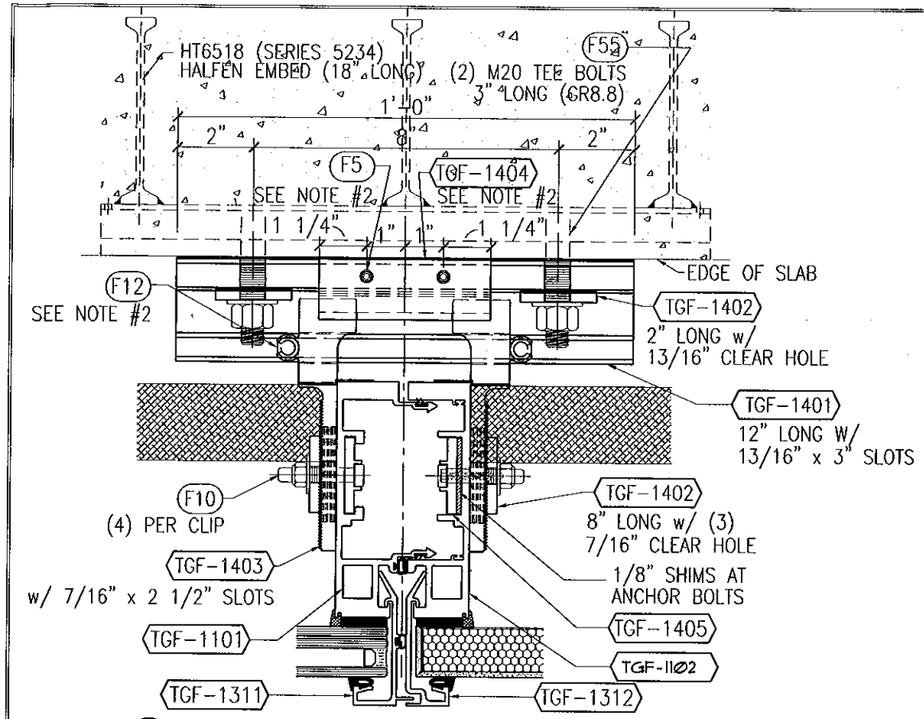

1 INT MULL AT FLOOR SLAB ANCHOR
SEE SHEET 11 FOR GLAZING OPTIONS
ANCHORED w/ HALFEN EMBED

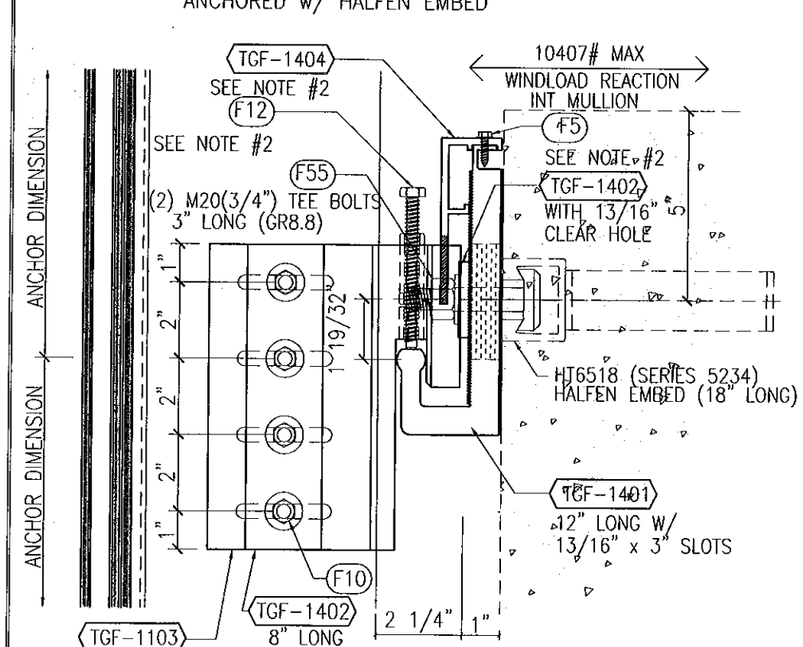

1A DL ANCHOR AT FLOOR SLAB (SIDE VIEW)
SEE SHEET 11 FOR GLAZING OPTIONS
ANCHORED w/ HALFEN EMBED

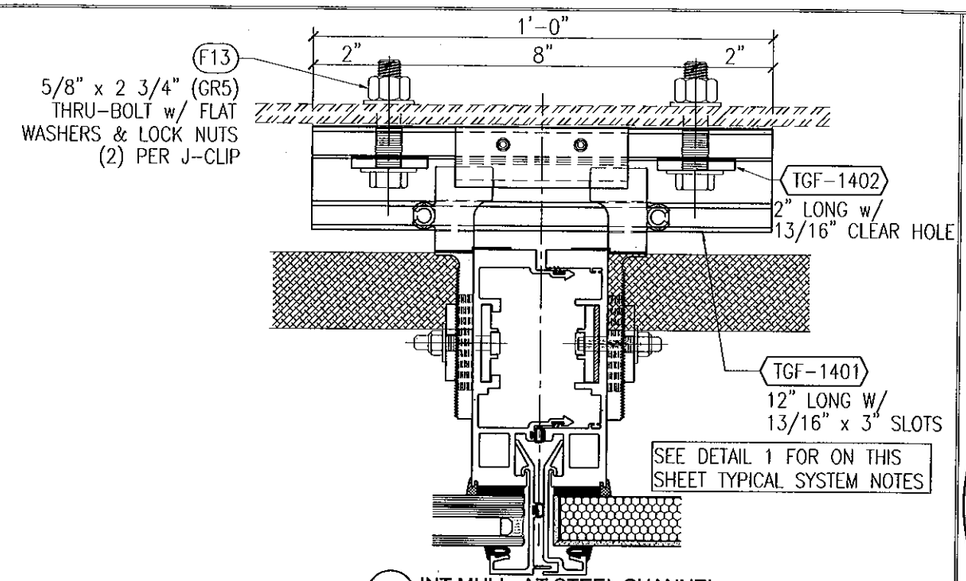

3 INT MULL AT STEEL CHANNEL
SEE SHEET 11 FOR GLAZING OPTIONS
ANCHORED w/ 5/8" THRU BOLTS

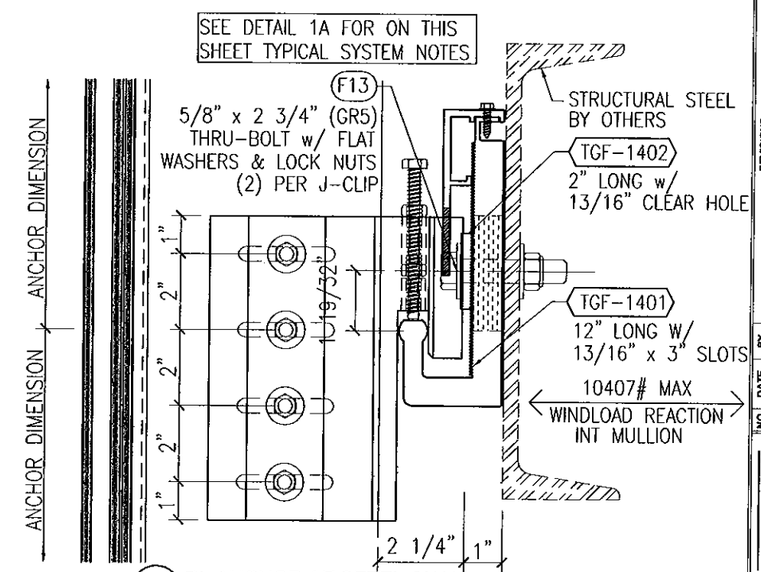

3A DL ANCHOR AT STEEL CHANNEL SUPPORT (SIDE VIEW)
SEE SHEET 11 FOR GLAZING OPTIONS
ANCHORED w/ 5/8" THRU BOLTS

NOTES:

1. SEE DETAILS ON SHEET 11 FOR BALANCE OF INTERMEDIATE MULLION INFORMATION AND VARIOUS GLAZING OPTIONS
2. INDICATES FASTENERS AND PARTS ARE NOT REQUIRED FOR WINDLOAD ANCHOR CONDITIONS

FOR MIAMI-DADE CO. B.C.C.O.

Approved as complying with the Florida Building Code
Date 10/20/2011
NOA# 11-0401.05
Miami Dade Product Control
By

JEFFREY H MARSH
LICENSE
No 70018
STATE OF
FLORIDA
PROFESSIONAL ENGINEER
10/5/2011

GLASS COMPANY
1101 13TH STREET WEST RIVIERA BEACH, FLORIDA 33404
PH. (561) 863-7078 FAX (561) 863-7088
www.trainorglass.com
TRAINOR
ILLINOIS FLORIDA GEORGIA NEW JERSEY COLORADO TEXAS ARIZONA VIRGINIA MARYLAND

REVISIONS

NO.	DATE	BY
1		
2		
3		
4		
5		
6		

DESIGN ENGINEERING & CONSULTING
2929 N. COLLINS BLVD. - SUITE 100 PH: 972-544-0640
ROCKWOOD, TEXAS 75088 FAX: 972-544-4234

Date	Scale
3-3-11	HALF

Drawing No
4326439

Drawing Title
130PSF
SMALL MISSILE IMPACT
ANCHOR DETAILS

Sheet No
18 / 41

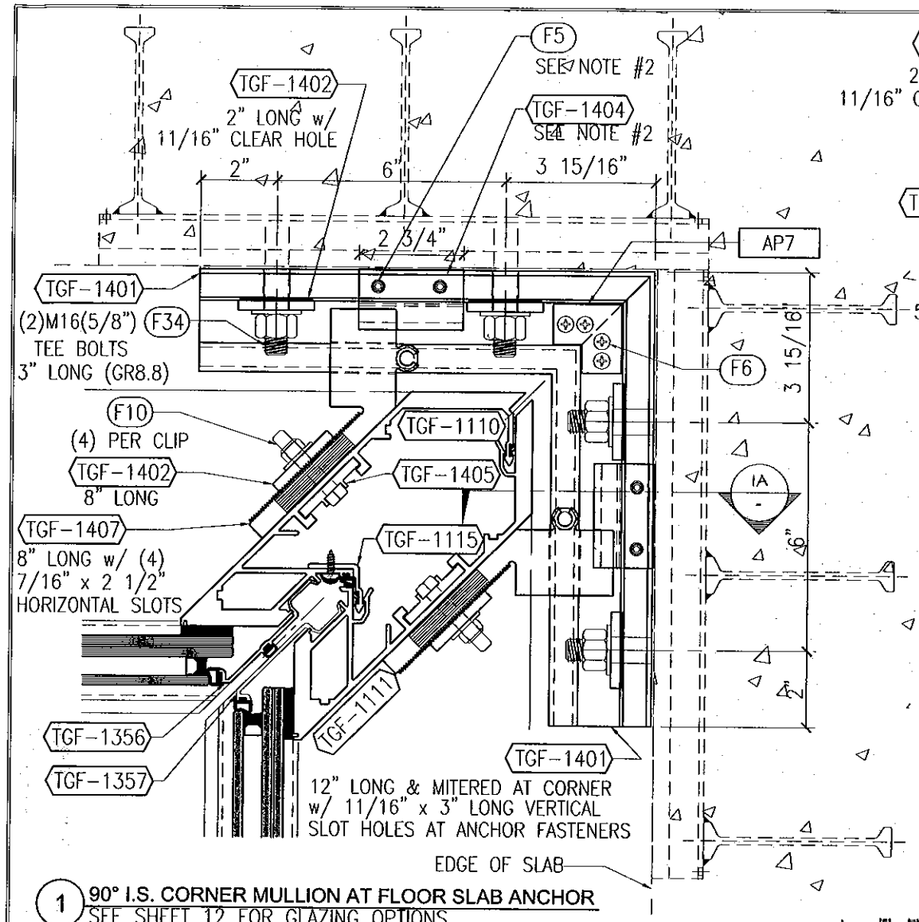

1 **90° I.S. CORNER MULLION AT FLOOR SLAB ANCHOR**
SEE SHEET 12 FOR GLAZING OPTIONS
ANCHORED w/ HALFEN CORNER EMBED

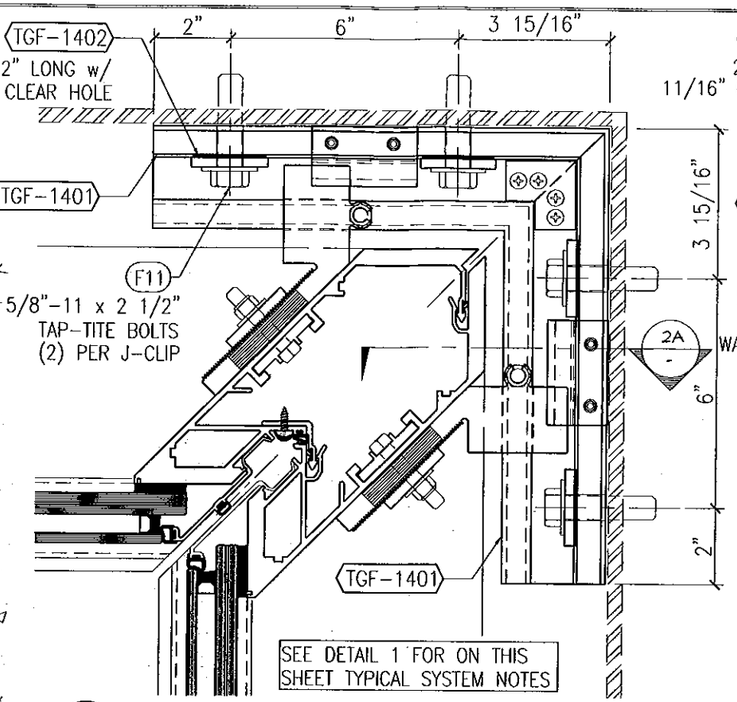

2 **90° I.S. CORNER MULLION AT TUBE STEEL**
SEE SHEET 12 FOR GLAZING OPTIONS
ANCHORED w/ 5/8" TAP-TITE BOLTS

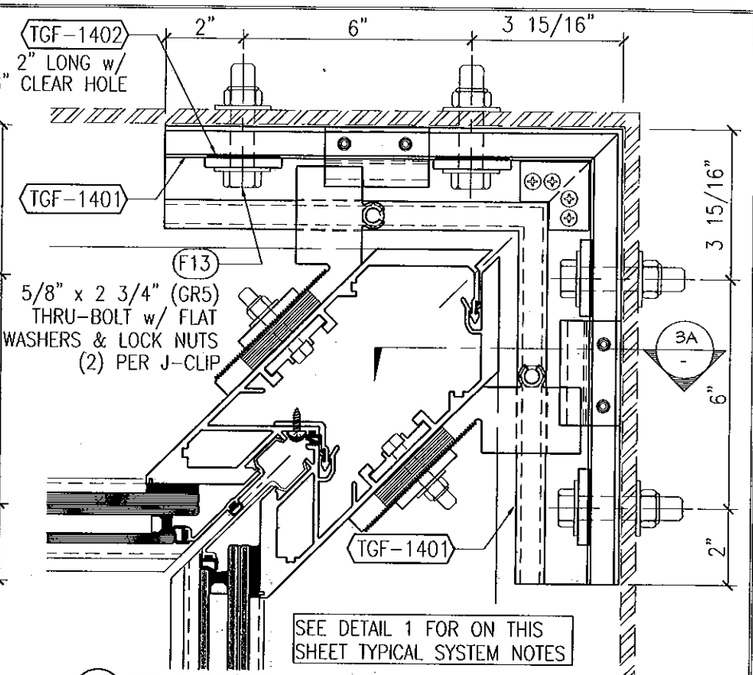

3 **90° I.S. CORNER MULLION AT STEEL CHANNEL**
SEE SHEET 12 FOR GLAZING OPTIONS
ANCHORED w/ 5/8" THRU BOLTS

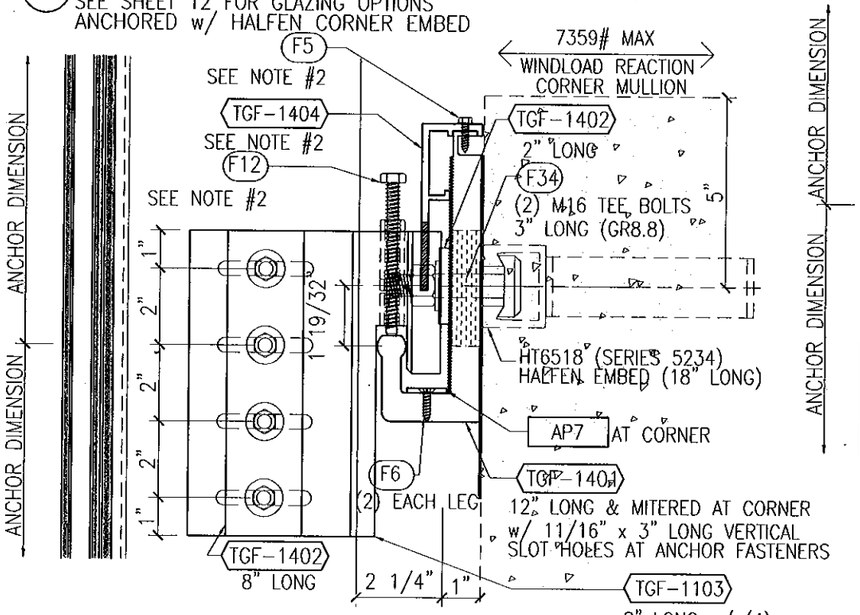

1A **DL ANCHOR AT FLOOR SLAB (SIDE VIEW)**
SEE SHEET 12 FOR GLAZING OPTIONS
ANCHORED w/ HALFEN CORNER EMBED

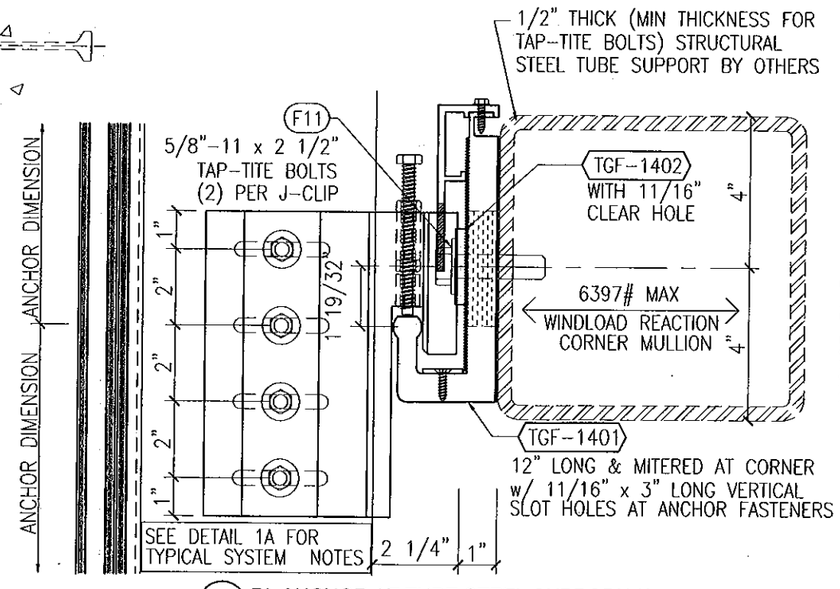

2A **DL ANCHOR AT TUBE STEEL SUPPORT (SIDE VIEW)**
SEE SHEET 12 FOR GLAZING OPTIONS
ANCHORED w/ 5/8" TAP-TITE BOLTS

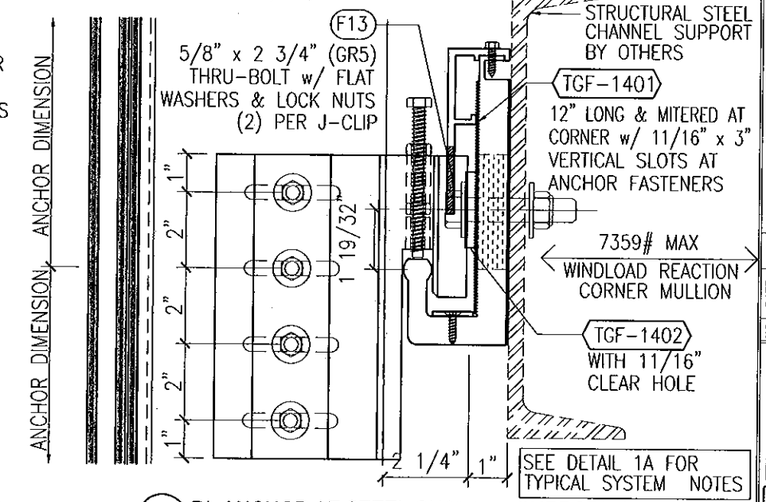

3A **DL ANCHOR AT STEEL CHANNEL SUPPORT (SIDE VIEW)**
SEE SHEET 12 FOR GLAZING OPTIONS
ANCHORED w/ 5/8" THRU BOLTS

NOTES:

1. SEE DETAILS ON SHEET 12 FOR BALANCE OF INSIDE CORNER MULLION INFORMATION AND VARIOUS GLAZING OPTIONS
2. INDICATES FASTENERS AND PARTS ARE NOT REQUIRED FOR WINDLOAD ANCHOR CONDITIONS

FOR MIAMI-DADE CO. B.C.C.O.

Approved as complying with the
Florida Building Code
Date 10/20/2011
NOA# 11-0401.05
Miami Dade Product Control
By

JEFFREY H MARSH
LICENSE
No 70018
STATE OF
FLORIDA
PROFESSIONAL ENGINEER
10/5/2011

TRAINOR GLASS COMPANY
1101 13TH STREET WEST RIVIERA BEACH, FLORIDA 33404
PH. (561) 863-7078 FAX (561) 863-7088
www.trainorglass.com
ILLINOIS FLORIDA GEORGIA NEW JERSEY COLORADO TEXAS ARIZONA VIRGINIA MARYLAND

REVISIONS

NO.	DATE	BY

DESIGN ENGINEERING & CONSULTING Inc.
2505 N. COUNTY RD., SUITE 160 PH: 972-444-4840
PERMIAN, TEXAS 79338 FAX: 972-444-4845

Date	Scale
3-3-11	HALF

Drawing No
4326439

Drawing Title
130PSF
SMALL MISSILE IMPACT
ANCHOR DETAILS

Sheet No
19 / 41

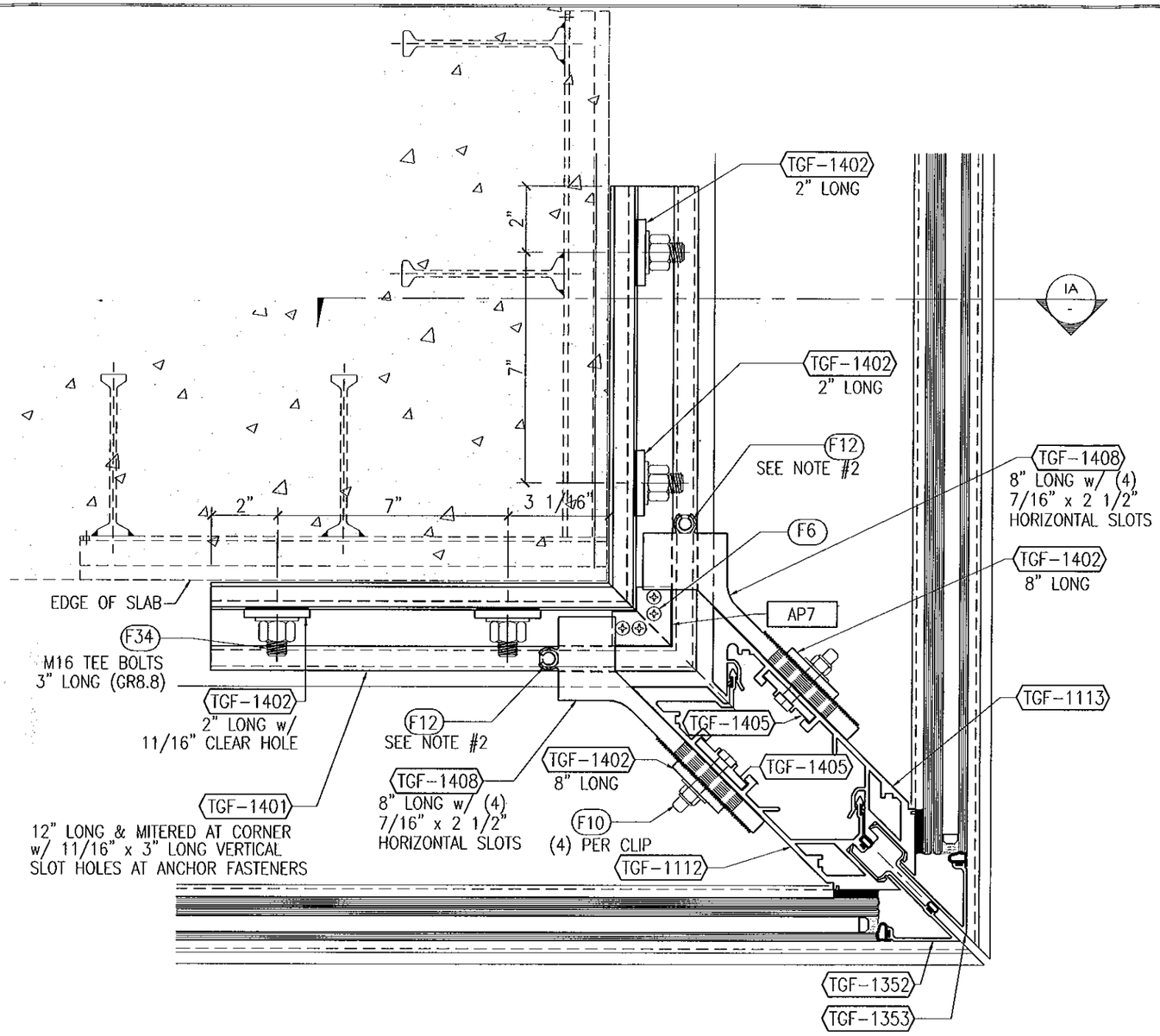

1 90° O.S. CORNER MULL AT FLOOR SLAB ANCHOR
SEE SHEET 13 FOR GLAZING OPTIONS
ANCHORED w/ HALFEN CUSTOM CORNER EMBED

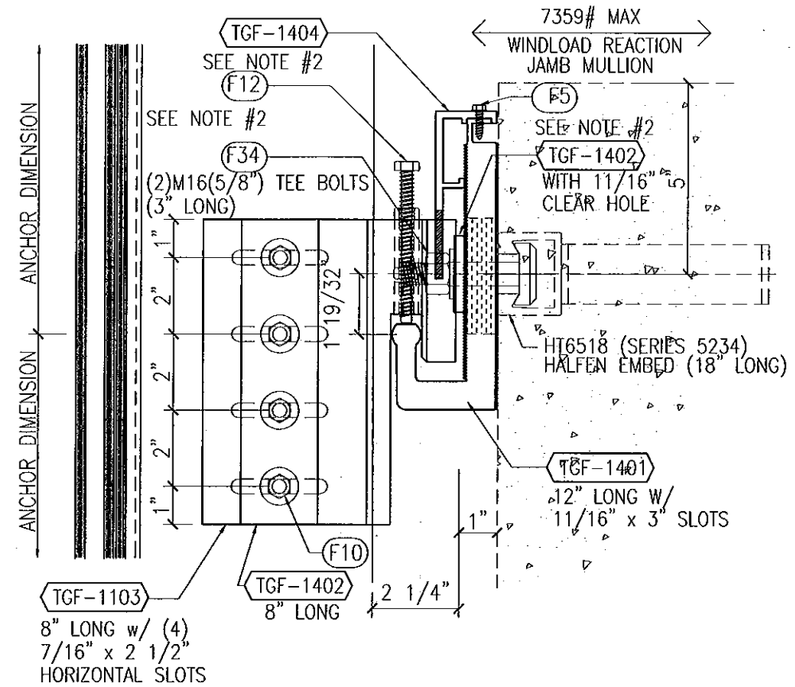

1A DL ANCHOR AT FLOOR SLAB (SIDE VIEW)
SEE SHEET 13 FOR GLAZING OPTIONS
ANCHORED w/ HALFEN CUSTOM CORNER EMBED

NOTES:

1. SEE DETAILS ON SHEET 13 FOR BALANCE OF OUTSIDE CORNER MULLION INFORMATION AND VARIOUS GLAZING OPTIONS
2. INDICATES FASTENERS AND PARTS ARE NOT REQUIRED FOR WINDLOAD ANCHOR CONDITIONS

FOR MIAMI-DADE CO. B.C.C.O.

Approved as complying with the Florida Building Code
Date 10/20/2011
NOA# 11-0401.05
Miami Dade Product Control
By

JEFFREY H MARSH
LICENSE
No 70018
STATE OF FLORIDA
PROFESSIONAL ENGINEER
10/5/2011

TRAINOR
GLASS COMPANY
1101 13TH STREET WEST RIVIERA BEACH, FLORIDA 33404
PH. (561) 863-7078 FAX (561) 863-7088
www.trainorglass.com
ILLINOIS FLORIDA GEORGIA NEW JERSEY COLORADO TEXAS ARIZONA VIRGINIA MARYLAND

REVISIONS

NO.	DATE	BY
1		
2		
3		
4		
5		
6		

DESIGN ENGINEERING & CONSULTING

Date	Scale
3-3-11	HALF

Drawing No
4326439

Drawing Title
130PSF
SMALL MISSILE IMPACT
ANCHOR DETAILS

Sheet No
20 / 41

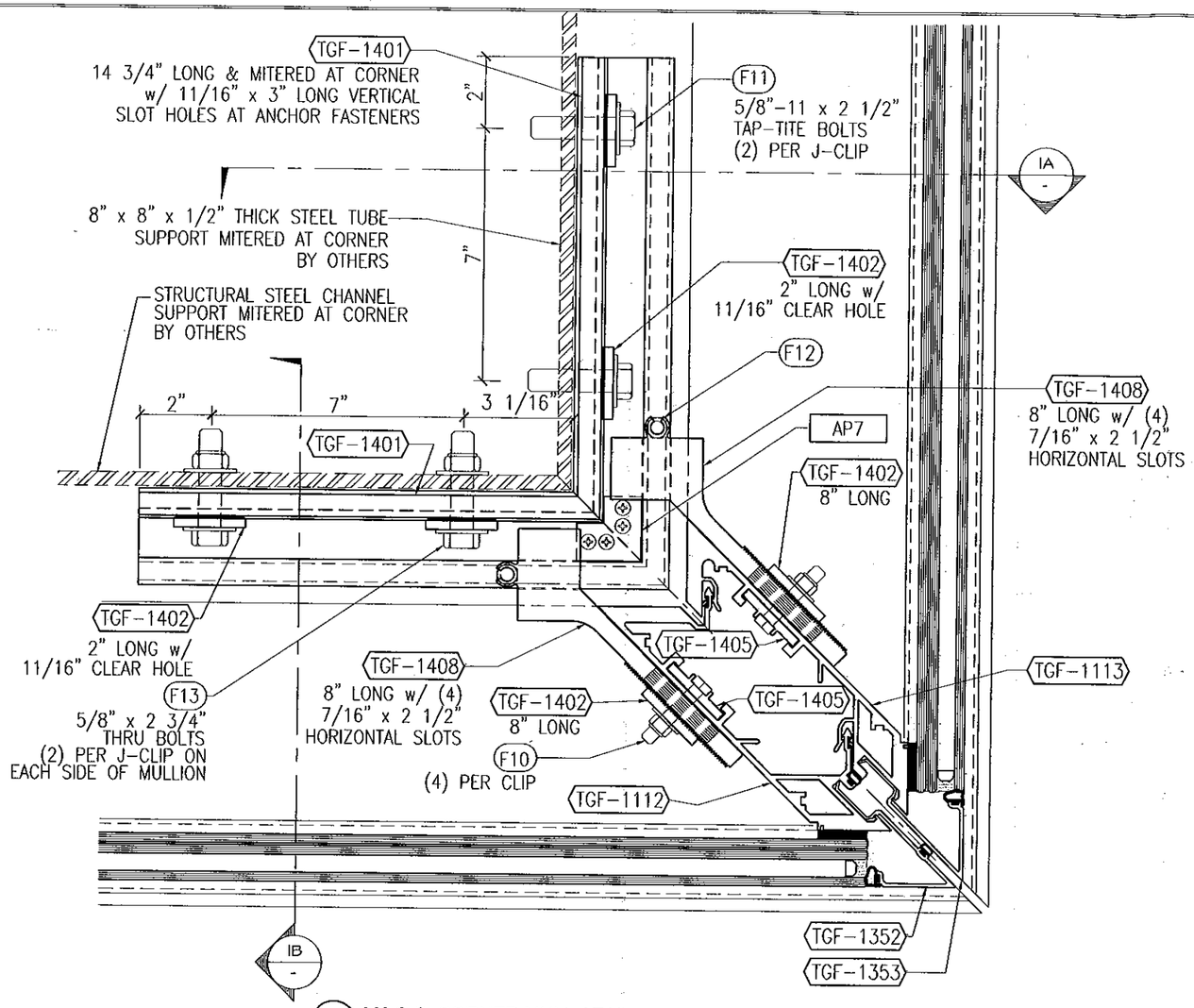

1 **90° O.S. CORNER MULL AT TUBE STEEL SUPPORT**
SEE SHEET 13 FOR GLAZING OPTIONS
ANCHORED w/ 5/8" TAP-TITE OR 5/8" THRU BOLTS

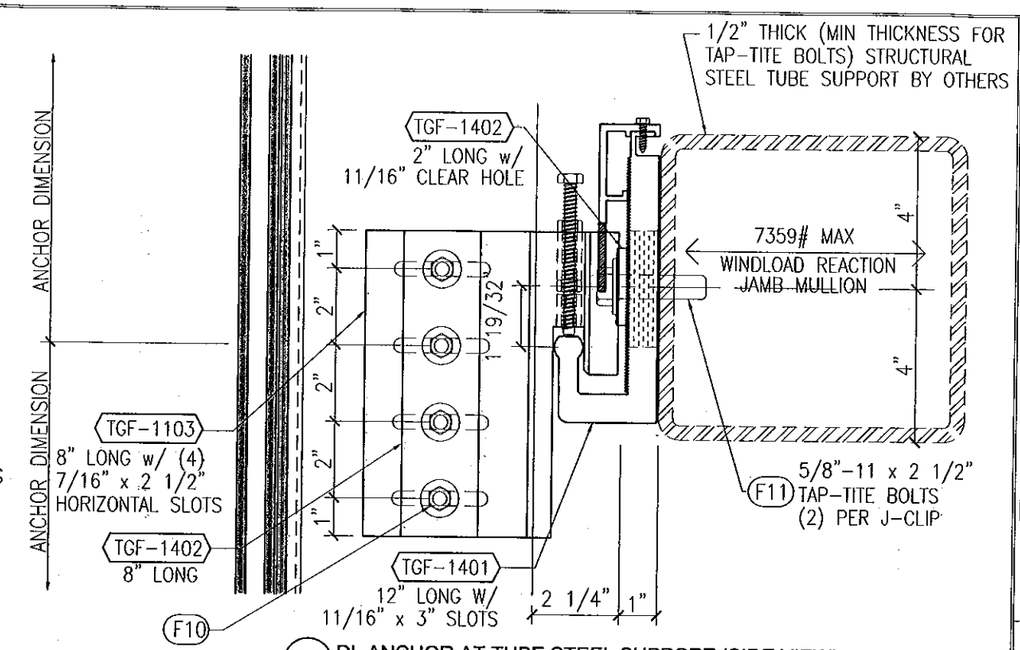

1A **DL ANCHOR AT TUBE STEEL SUPPORT (SIDE VIEW)**
SEE SHEET 10 FOR GLAZING OPTIONS
ANCHORED w/ 5/8" TAP-TITE BOLTS

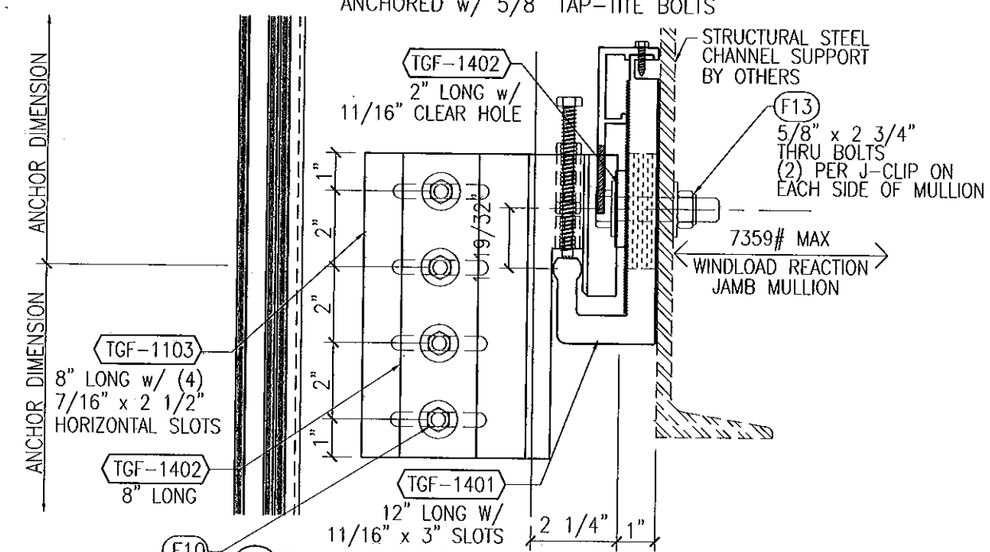

1B **DL ANCHOR AT STEEL SUPPORT CHANNEL (SIDE VIEW)**
SEE SHEET 10 FOR GLAZING OPTIONS
ANCHORED w/ 5/8" THRU BOLTS

NOTES:

1. SEE DETAILS ON SHEET 13 FOR BALANCE OF OUTSIDE CORNER MULLION INFORMATION AND VARIOUS GLAZING OPTIONS
2. INDICATES FASTENERS AND PARTS ARE NOT REQUIRED FOR WINDLOAD ANCHOR CONDITIONS

FOR MIAMI-DADE CO. B.C.C.O.

Approved as complying with the Florida Building Code
Date 10/20/2011
NOA# 11-0401.05
Miami-Dade Product Control
By

JEFFREY H MARSH
LICENSE
No 70018
STATE OF FLORIDA
PROFESSIONAL ENGINEER
10/5/2011

TRAINOR GLASS COMPANY
1101 13TH STREET WEST RIVIERA BEACH, FLORIDA 33404
PH. (561) 863-7078 FAX (561) 863-7088
www.trainorglass.com
ILLINOIS FLORIDA GEORGIA NEW JERSEY COLORADO TEXAS ARIZONA VIRGINIA MARYLAND

REVISIONS

NO.	DATE	BY

DESIGN ENGINEERING & CONSULTING Inc
2905 N. GALENA BLVD. - SUITE 130 MCKINNEY, TEXAS 75069
PH: 972-544-0048 FAX: 972-544-0204

Date	Scale
3-3-11	HALF

Drawing No: 4326439

Drawing Title: 130PSF SMALL MISSILE IMPACT ANCHOR DETAILS

Sheet No: 21 / 41

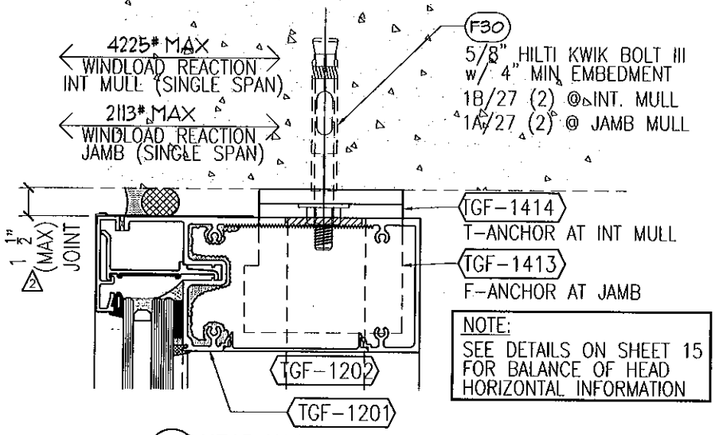

NOTE:
SEE DETAILS ON SHEET 15
FOR BALANCE OF HEAD
HORIZONTAL INFORMATION

1 HEAD AT ANCHOR
(SEE SHEET 15 FOR GLAZING OPTIONS)
ANCHORED w/ 5/8" EXPANSION BOLT

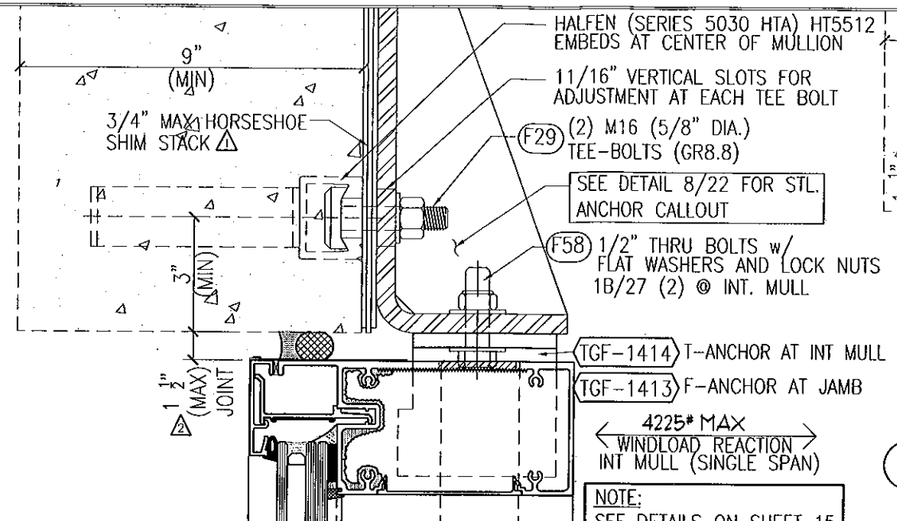

NOTE:
SEE DETAILS ON SHEET 15
FOR BALANCE OF HEAD
HORIZONTAL INFORMATION

8A HEAD ANCHOR
(SEE SHEET 15 FOR GLAZING OPTIONS)
ANCHORED w/ HALFEN EMBED

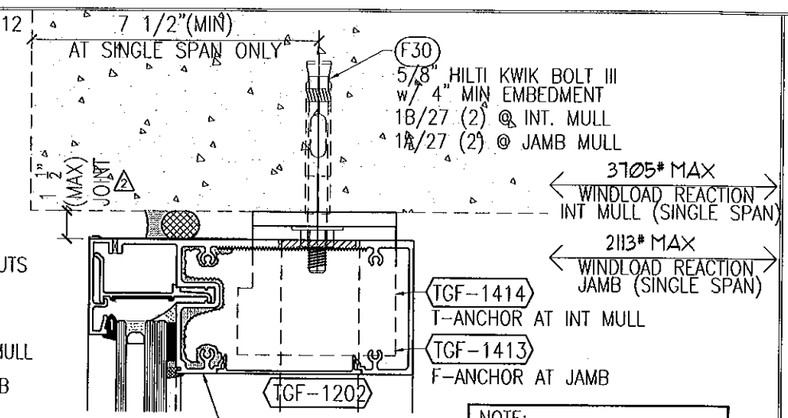

NOTE:
SEE DETAILS ON SHEET 15
FOR BALANCE OF HEAD
HORIZONTAL INFORMATION

7 HEAD AT ANCHOR
(SEE SHEET 15 FOR GLAZING OPTIONS)
ANCHORED w/ 5/8" EXPANSION BOLT

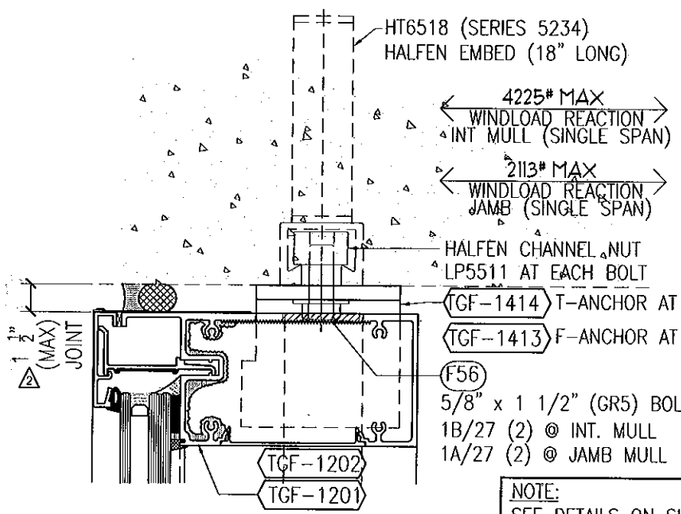

NOTE:
SEE DETAILS ON SHEET 15
FOR BALANCE OF HEAD
HORIZONTAL INFORMATION

2 HEAD AT ANCHOR
(SEE SHEET 15 FOR GLAZING OPTIONS)
ANCHORED w/ HALFEN EMBED

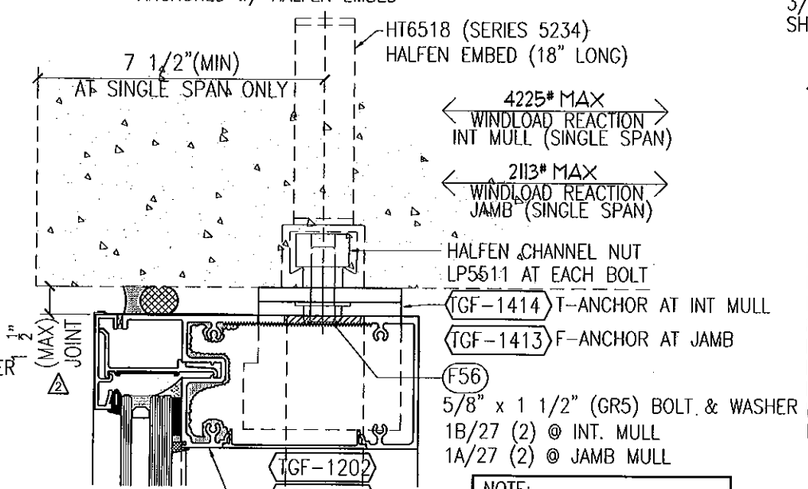

NOTE:
SEE DETAILS ON SHEET 15
FOR BALANCE OF HEAD
HORIZONTAL INFORMATION

5 HEAD AT ANCHOR
(SEE SHEET 15 FOR GLAZING OPTIONS)
ANCHORED w/ HALFEN EMBED

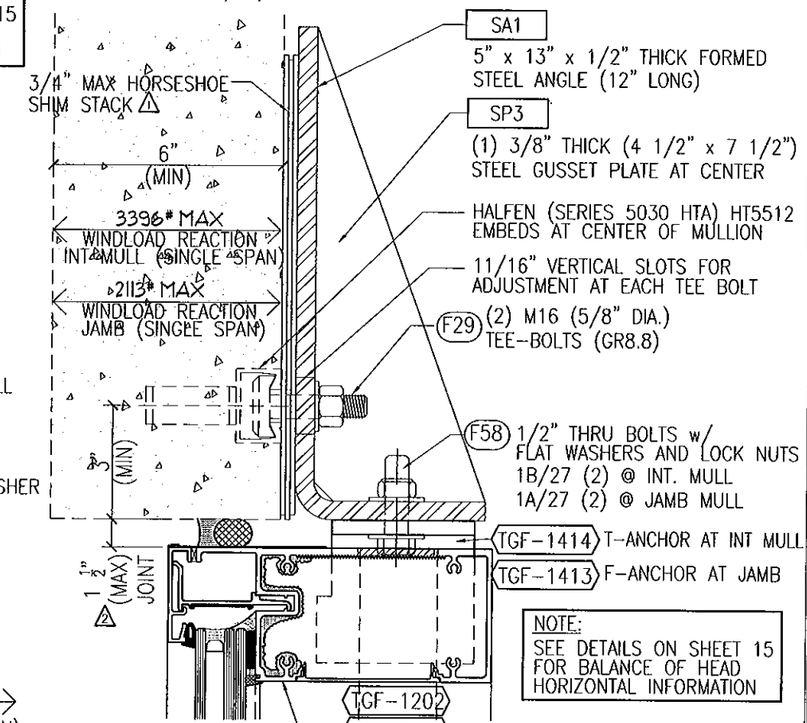

NOTE:
SEE DETAILS ON SHEET 15
FOR BALANCE OF HEAD
HORIZONTAL INFORMATION

8 HEAD ANCHOR
(SEE SHEET 15 FOR GLAZING OPTIONS)
ANCHORED w/ HALFEN EMBED

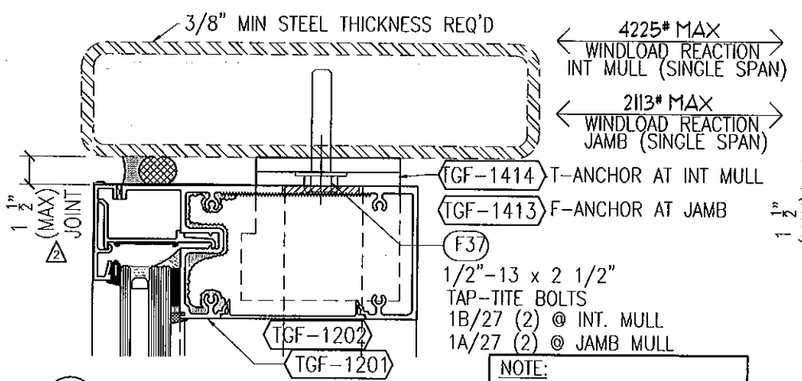

NOTE:
SEE DETAILS ON SHEET 15
FOR BALANCE OF HEAD
HORIZONTAL INFORMATION

3 HEAD AT ANCHOR
(SEE SHEET 15 FOR GLAZING OPTIONS)
ANCHORED w/ 1/2" TAP-TITE BOLTS

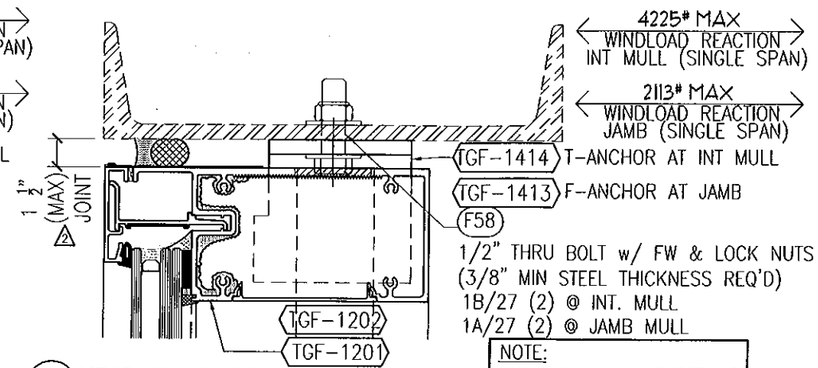

NOTE:
SEE DETAILS ON SHEET 15
FOR BALANCE OF HEAD
HORIZONTAL INFORMATION

6 HEAD AT ANCHOR
(SEE SHEET 15 FOR GLAZING OPTIONS)
ANCHORED w/ 1/2" THRU BOLT

FOR MIAMI-DADE CO. B.C.C.O.

Approved as complying with the
Florida Building Code
Date 10/20/2011
NOA# 11-0401.05
Miami Dade Product Control
By

JEFFREY H MARSH
LICENSE
No 70018
STATE OF
FLORIDA
PROFESSIONAL ENGINEER
10/5/2011

GLASS COMPANY
1101 13TH STREET WEST RIVIERA BEACH, FLORIDA 33404
PH. (561) 863-7078 FAX (561) 863-7088
www.trainorglass.com
TRAINOR
ILLINOIS FLORIDA GEORGIA NEW JERSEY COLORADO TEXAS ARIZONA VIRGINIA MARYLAND

NO.	DATE	BY	REVISIONS
1	9/14/11	DEC	UPGRADED NOTES FOR SEAM
2	10/10/11	DEC	REMOVED WALTER LABORATORY TO CHANGED UPGRADED JAMB SIZE

DESIGN ENGINEERING & CONSULTING Inc
2205 N. COLLINS BLVD. - SUITE 190
RICHARDSON, TEXAS 75080
PH. 972-644-0048
FAX. 972-644-0204

Date	Scale
3-3-11	HALF

Drawing No
4326439

Drawing Title
130PSF
SMALL MISSILE IMPACT
ANCHOR DETAILS

Sheet No
22 / 41

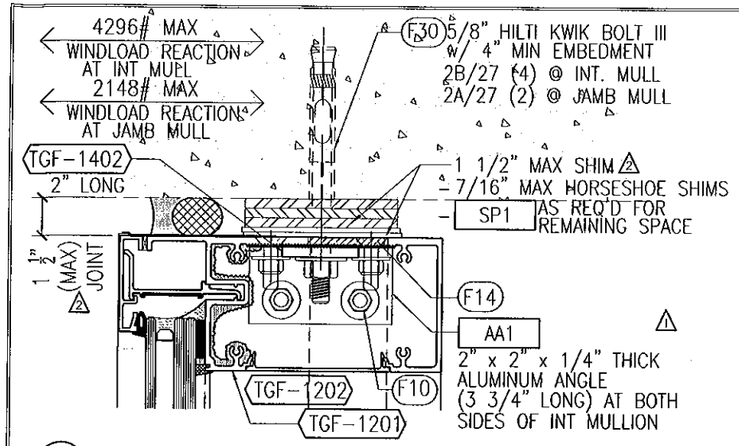

1 HEAD AT DL ANCHOR (MULTISPAN ONLY)
(SEE SHEET 15 FOR GLAZING OPTIONS)
ANCHORED w/ 5/8" EXPANSION BOLT

NOTE:
SEE DETAILS ON SHEET 15 FOR BALANCE OF HEAD HORIZONTAL INFORMATION

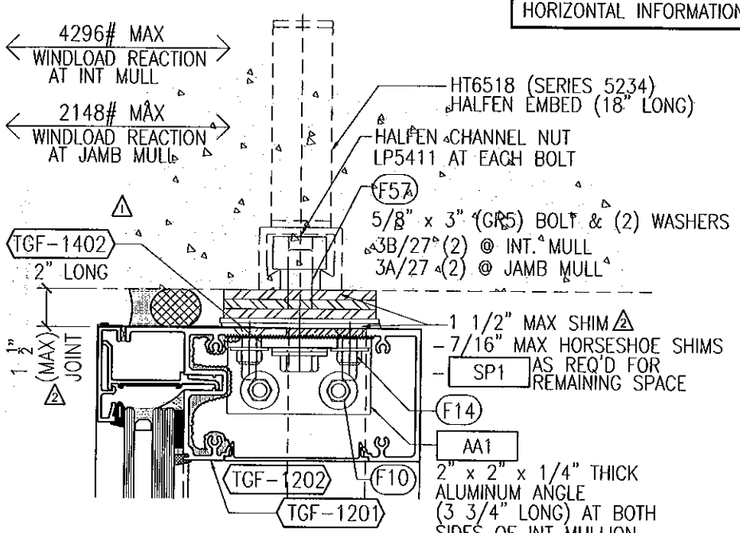

2 HEAD AT DL ANCHOR (MULTISPAN ONLY)
(SEE SHEET 15 FOR GLAZING OPTIONS)
ANCHORED w/ HALFEN EMBED

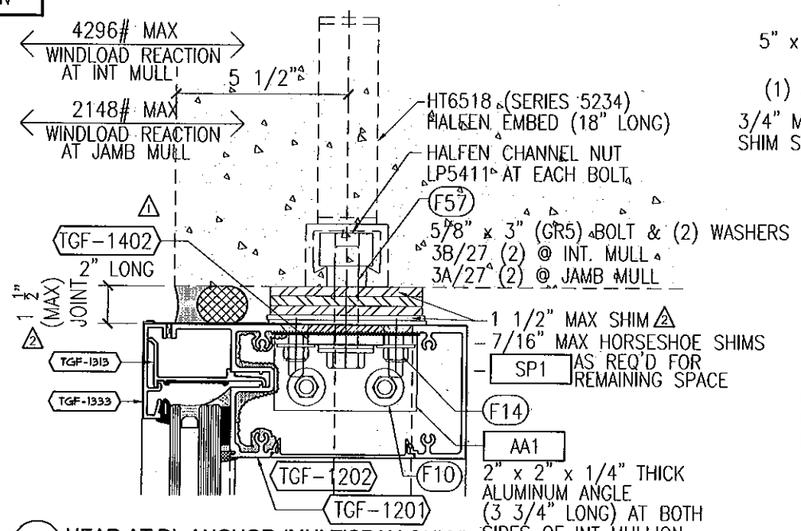

4 HEAD AT DL ANCHOR (MULTISPAN ONLY)
(SEE SHEET 15 FOR GLAZING OPTIONS)
ANCHORED w/ HALFEN EMBED

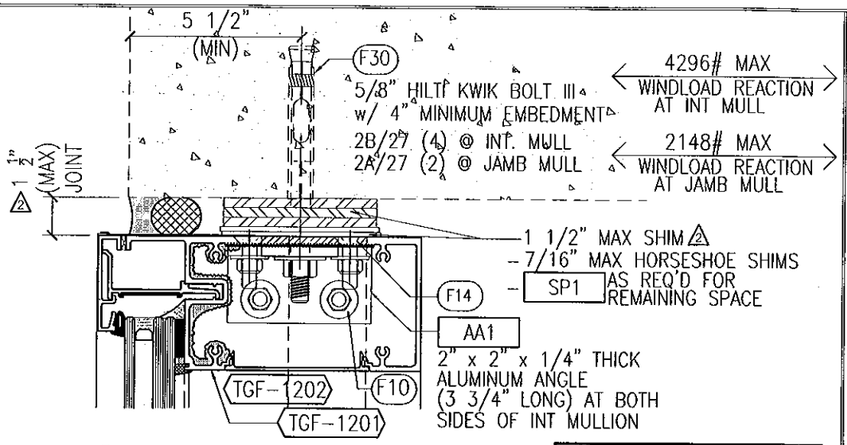

6 HEAD AT DL ANCHOR (MULTISPAN ONLY)
(SEE SHEET 15 FOR GLAZING OPTIONS)
ANCHORED w/ 5/8" EXPANSION BOLT

NOTE:
SEE DETAILS ON SHEET 15 FOR BALANCE OF HEAD HORIZONTAL INFORMATION

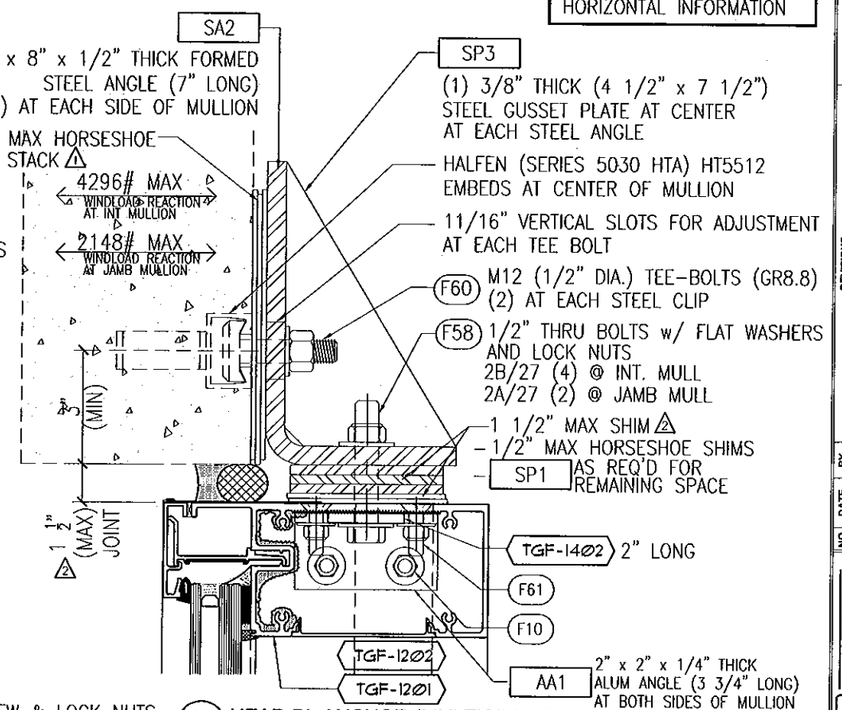

7 HEAD DL ANCHOR (MULTISPAN ONLY)
(SEE SHEET 15 FOR GLAZING OPTIONS)
ANCHORED w/ HALFEN EMBED

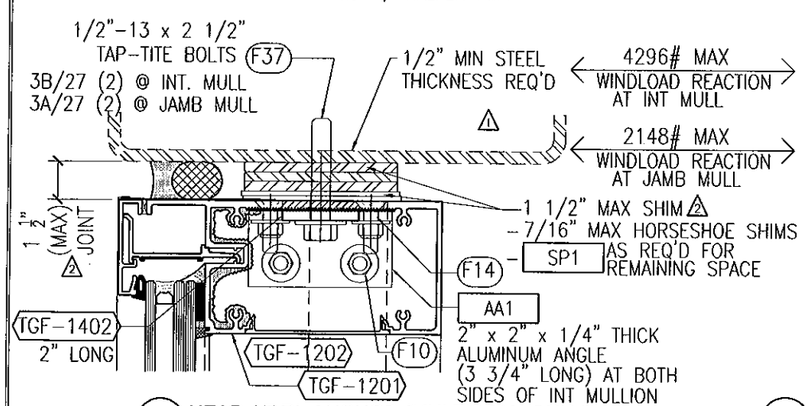

3 HEAD AT DL ANCHOR (MULTISPAN ONLY)
(SEE SHEET 15 FOR GLAZING OPTIONS)
ANCHORED w/ 1/2" TAP-TITE BOLTS

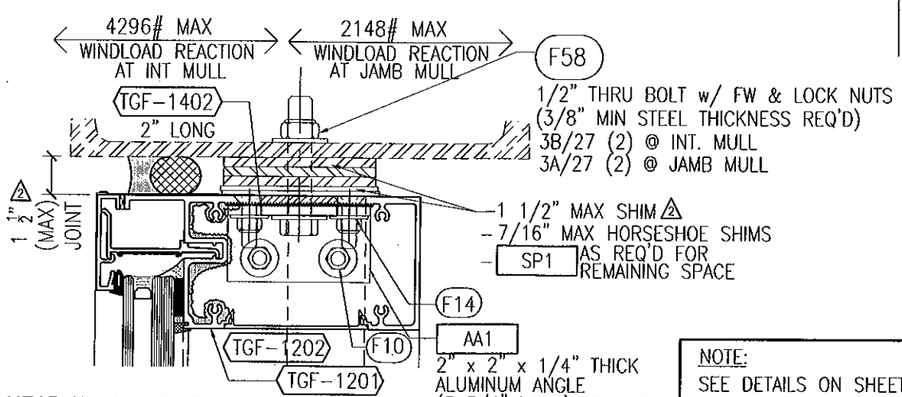

5 HEAD AT DL ANCHOR (MULTISPAN ONLY)
(SEE SHEET 15 FOR GLAZING OPTIONS)
ANCHORED w/ 1/2" THRU BOLTS

NOTE:
SEE DETAILS ON SHEET 15 FOR BALANCE OF HEAD HORIZONTAL INFORMATION

FOR MIAMI-DADE CO. B.C.C.O.

Approved as complying with the Florida Building Code
Date 10/20/2011
NOA# 11-0401.05
Miami Dade Product Control
By

JEFFREY H MARSH
LICENSE
No 70018
STATE OF FLORIDA
PROFESSIONAL ENGINEER
10/15/2011

TRAINOR GLASS COMPANY
1101 13TH STREET WEST RIVIERA BEACH, FLORIDA 33404
PH. (561) 863-7078 FAX (561) 863-7088
www.trainorglass.com
ILLINOIS FLORIDA GEORGIA NEW JERSEY COLORADO TEXAS ARIZONA VIRGINIA MARYLAND

REVISIONS

NO.	DATE	BY	DESC
1	8/24/11		IMPROVED NOTES FOR BIDDING
2	10/05/11		REVISED NOTES LABELING TO CLARIFY IMPROVED MAX JAMB SIZE
3			
4			
5			
6			

DESIGN ENGINEERING & CONSULTING Inc.
2205 N. COLLINS BLVD. - SUITE 130 ARLINGTON, TEXAS 76011
PH. 972-444-4646 FAX: 972-444-4206

Date	Scale
3-3-11	HALF

Drawing No
4326439

Drawing Title
130PSF SMALL MISSILE IMPACT ANCHOR DETAILS

Sheet No
23 / 41

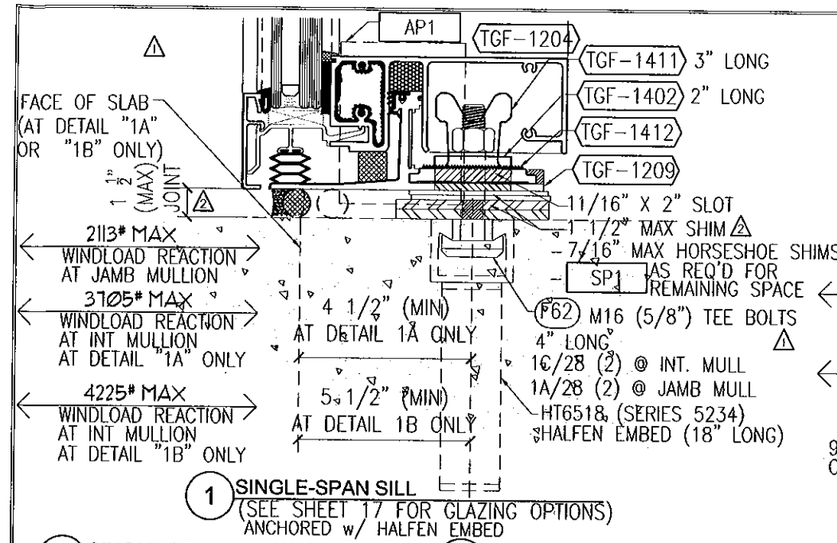

1 SINGLE-SPAN SILL
(SEE SHEET 17 FOR GLAZING OPTIONS)
ANCHORED w/ HALFEN EMBED

1A SINGLE-SPAN SILL W/ SLAB EDGE
ANCHORED w/ HALFEN EMBED

1B SINGLE-SPAN SILL W/ SLAB EDGE
ANCHORED w/ HALFEN EMBED

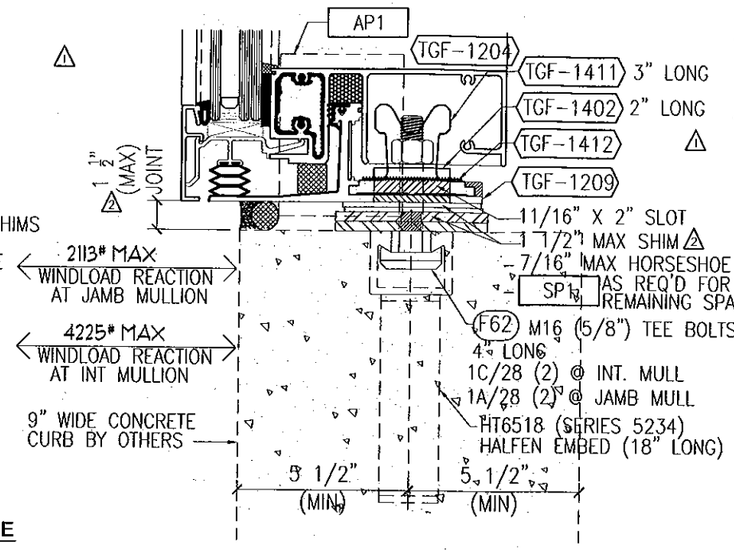

4 SINGLE-SPAN SILL
(SEE SHEET 17 FOR GLAZING OPTIONS)
ANCHORED w/ HALFEN EMBED

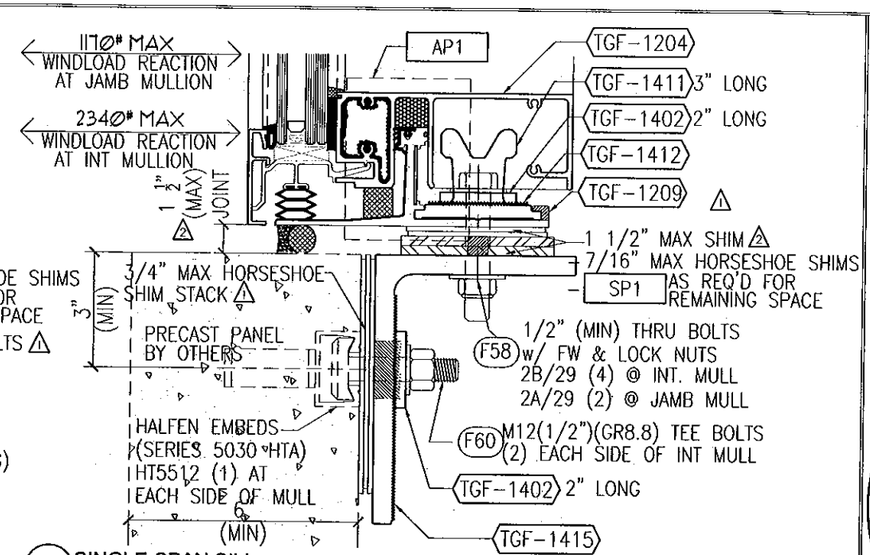

6 SINGLE-SPAN SILL
(SEE SHEET 17 FOR GLAZING OPTIONS)
ANCHORED w/ HALFEN EMBED

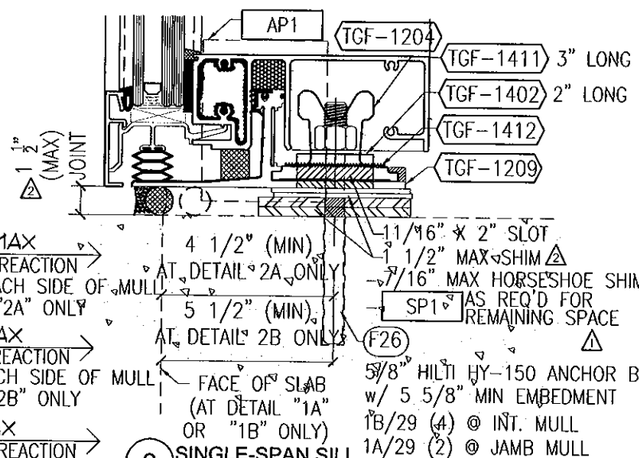

2 SINGLE-SPAN SILL
(SEE SHEET 17 FOR GLAZING OPTIONS)
ANCHORED w/ 5/8" EPOXY ANCHOR BOLT

2A SINGLE-SPAN SILL
ANCHORED w/ 5/8" EPOXY BOLT

2B SINGLE-SPAN SILL
ANCHORED w/ 5/8" EPOXY BOLT

NOTE:
SEE DETAILS ON SHEET 15 FOR BALANCE OF SINGLE SPAN HORIZONTAL INFORMATION

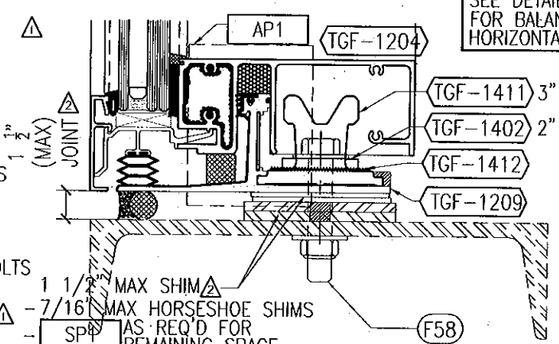

5 SINGLE-SPAN SILL
SEE SHEET 17 FOR GLAZING OPTIONS
ANCHORED w/ 5/8" THRU BOLT

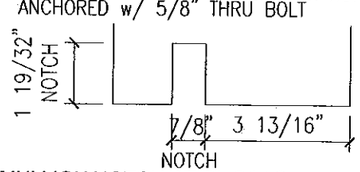

A MULLION NOTCH AT DL SILLS
NOTCH AT CHICKEN HEAD OF SILL STARTER

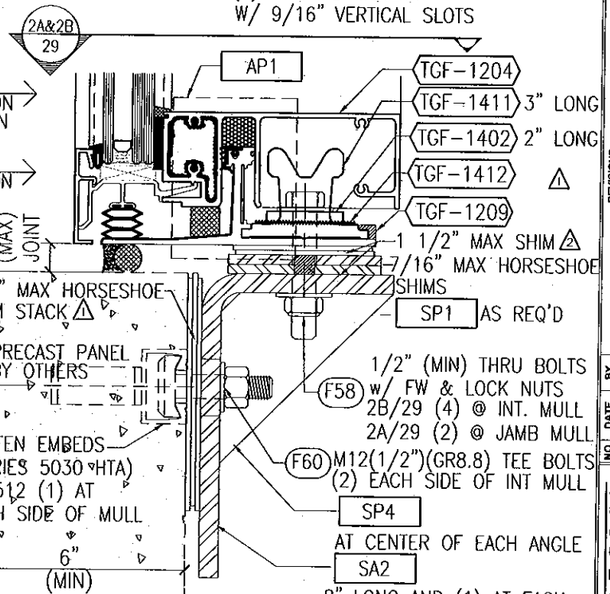

7 SINGLE-SPAN SILL
AT PRECAST PANEL (SEE SHEET 17 FOR GLAZING OPTIONS)
ANCHORED w/ HALFEN EMBED

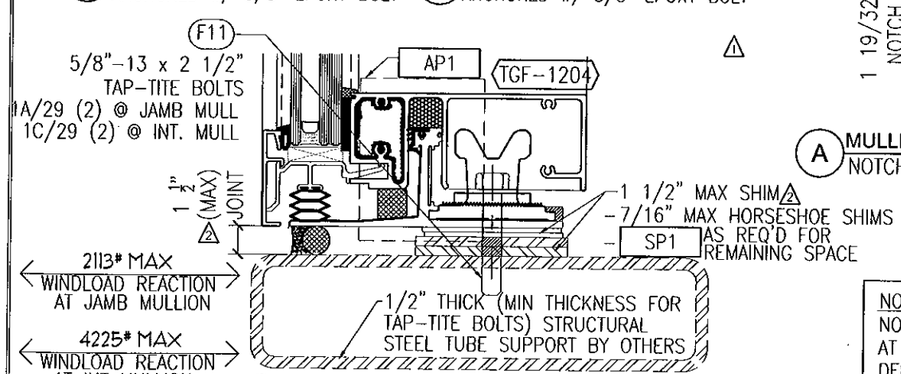

3 SINGLE-SPAN SILL
(SEE SHEET 17 FOR GLAZING OPTIONS)
ANCHORED w/ 1/2" TAP-TITE BOLT

NOTE:
NOTCH BOTTOM OF MULLION AT CHICKEN HEAD 1 19/32" DEEP AT ALL DEADLOAD SILL LOCATIONS

NOTES:

1. SEE DETAILS ON SHEET 15 FOR BALANCE OF SINGLE SPAN SILL INFORMATION AND VARIOUS GLAZING OPTIONS
2. INDICATES FASTENERS AND PARTS ARE NOT REQUIRED FOR WINDLOAD ANCHOR CONDITIONS
3. MAX WINDLOAD REACTION = 3412# IF (2) 5/8" EPOXY ANCHOR BOLTS w/ 5 5/8" MIN EMBEDMENT ARE USED ON EACH SIDE OF MULLION – (2) AT JAMB

SA2 = 5" x 8" x 1/2" THICK FORMED STEEL ANGLE (7" LONG)

SP1 = 4" x 4" x 1/4" THICK STEEL PLATES

SP4 = 4 1/2" x 4 1/2" x 3/8" THICK STEEL GUSSET PLATE

FOR MIAMI-DADE CO. B.C.C.O.

Approved as complying with the Florida Building Code
Date 10/20/2011
NOA# 11-0401.05
Miami Dade Product Control
By

JEFFREY H MARSH
LICENSE
No 70018
STATE OF FLORIDA
PROFESSIONAL ENGINEER
10/5/2011

TRAINOR GLASS COMPANY
1101 13TH STREET WEST RIVIERA BEACH, FLORIDA 33404
PH. (561) 863-7078 FAX (561) 863-7088
www.trainorglass.com
ILLINOIS FLORIDA GEORGIA NEW JERSEY COLORADO TEXAS ARIZONA VIRGINIA MARYLAND

REVISIONS

NO.	DATE	BY	DESC.
1	8/24/11		ADDED 11/16" X 2" SLOTS TO ANCHOR BOTH UPRIGHTS & SILL
2	10/20/11		REMOVED HALFEN LABELING TO SHOW UPRIGHT AND SILL

DESIGN ENGINEERING & CONSULTING Inc.
PH: 972-444-0846
FAX: 972-444-4284
3900 N. GALLOWS ROAD, SUITE 100
DESOTO, TEXAS 75115

Date	Scale
3-3-11	HALF

Drawing No
4326439

Drawing Title
130PSF SMALL MISSILE IMPACT ANCHOR DETAILS

Sheet No
24 / 41

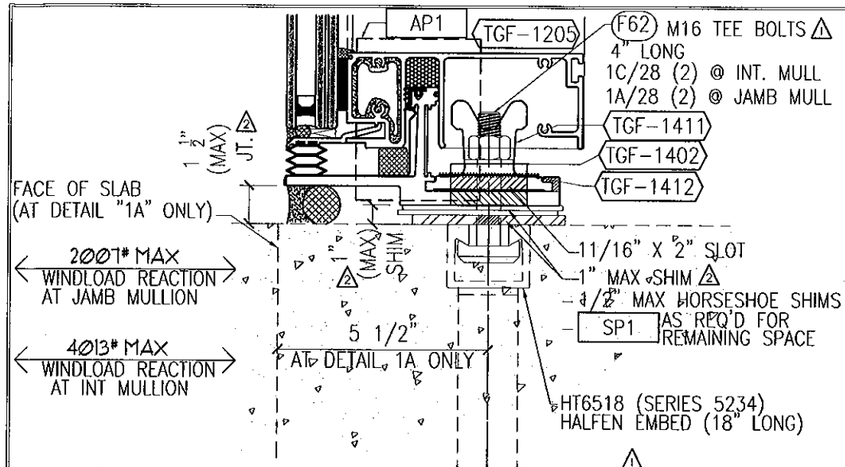

1 SILL HORIZ'L AT WL ANCHOR
(SEE SHEET 18 FOR GLAZING OPTIONS
ANCHORED w/ HALFEN EMBED

1A SILL HORIZ'L AT WL ANCHOR W/ SLAB EDGE
(SEE SHEET 18 FOR GLAZING OPTIONS
ANCHORED w/ HALFEN EMBED

NOTE:
SEE DETAILS ON SHEET 18
FOR BALANCE OF CURTAINWALL
SILL HORIZONTAL INFORMATION

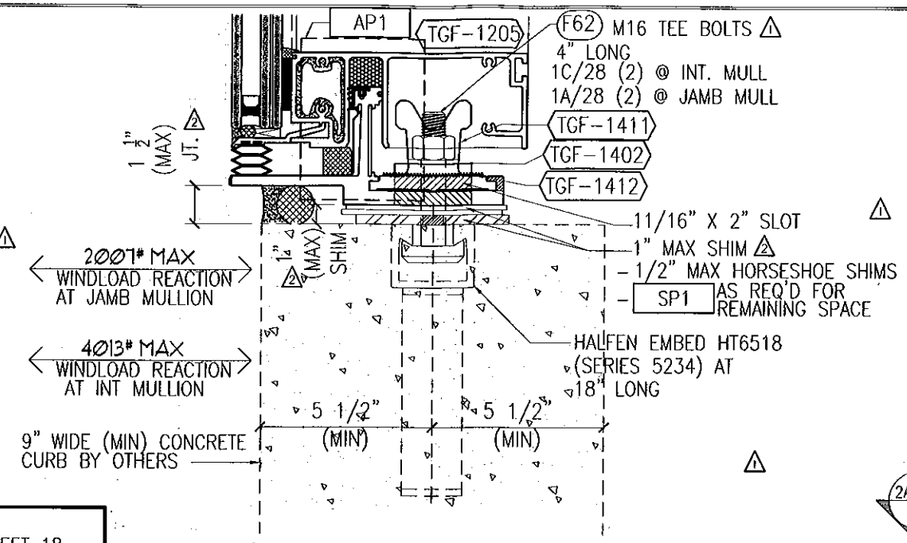

4 SILL HORIZ'L AT WL ANCHOR
(SEE SHEET 18 FOR GLAZING OPTIONS
ANCHORED w/ HALFEN EMBED

NOTE:
SEE DETAILS ON SHEET 18
FOR BALANCE OF CURTAINWALL
SILL HORIZONTAL INFORMATION

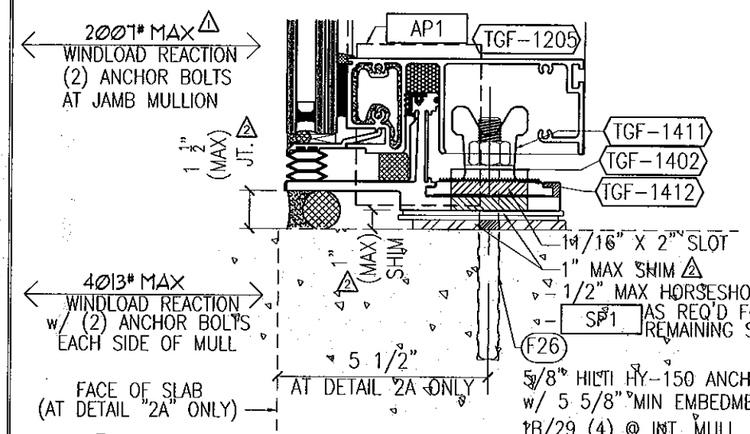

2 SILL HORIZ'L AT WINDLOAD ANCHOR
(SEE SHEET 18 FOR GLAZING OPTIONS)
ANCHORED w/ 5/8" EPOXY ANCHOR BOLT

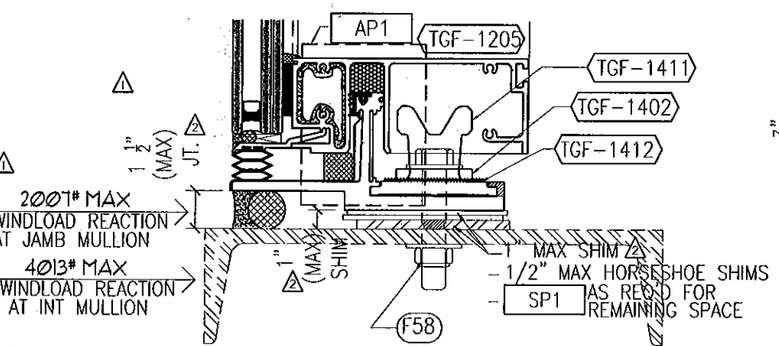

5 SILL HORIZ'L AT WINDLOAD ANCHOR
(SEE SHEET 18 FOR GLAZING OPTIONS)
ANCHORED w/ 5/8" THRU BOLT

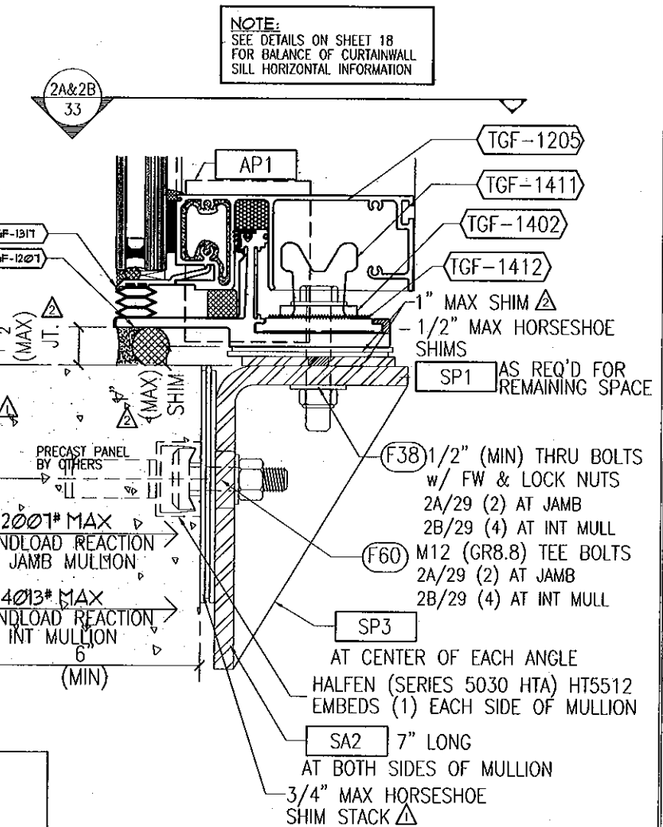

6 SILL HORIZ'L AT WL ANCHOR
AT PRECAST PANEL (SEE SHEET 18 FOR GLAZING OPTIONS)
ANCHORED w/ HALFEN EMBED

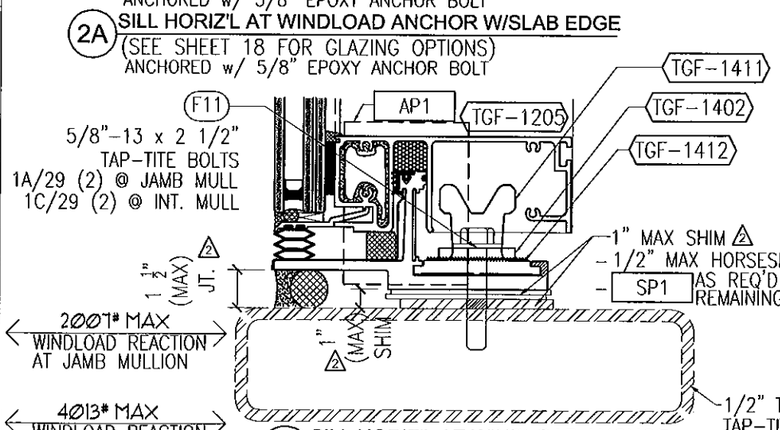

3 SILL HORIZ'L AT WINDLOAD ANCHOR
(SEE SHEET 18 FOR GLAZING OPTIONS)
ANCHORED w/ 1/2" TAP-TITE BOLT

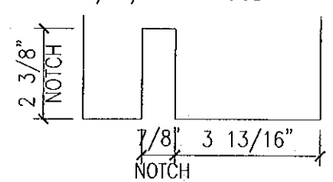

A MULLION NOTCH AT WL SILLS
NOTCH AT CHICKEN HEAD OF SILL STARTER

NOTE:
NOTCH BOTTOM OF MULLION
AT CHICKEN HEAD 2 3/8"
DEEP AT ALL WINDLOAD
SILL LOCATIONS

NOTES:

1. SEE DETAILS ON SHEET 18 FOR BALANCE OF CURTAINWALL SILL INFORMATION AND VARIOUS GLAZING OPTIONS
2. INDICATES FASTENERS AND PARTS ARE NOT REQUIRED FOR WINDLOAD ANCHOR CONDITIONS
3. MAX WINDLOAD REACTION = 3412# IF (2) 5/8" EPOXY ANCHOR BOLTS w/ 5 5/8" MIN EMBEDMENT ARE USED ON EACH SIDE OF MULLION – (2) AT JAMB

SA2 = 5" x 8" x 1/2" THICK FORMED STEEL ANGLE (7" LONG)

SP1 = 4" x 4" x 1/4" THICK STEEL PLATES

SP4 = 4 1/2" x 4 1/2" x 3/8" THICK STEEL GUSSET PLATE

FOR MIAMI-DADE CO. B.C.C.O.

Approved as complying with the Florida Building Code
Date 10/26/2011
NOA# 11-0401.05
Miami Dade Product Control
By

JEFFREY H MARSH
LICENSE
No 70018
STATE OF
FLORIDA
PROFESSIONAL ENGINEER
10/5/2011

TRAINOR GLASS COMPANY
1101 13TH STREET WEST RIVIERA BEACH, FLORIDA 33404
PH. (561) 863-7078 FAX (561) 863-7088
www.trainorglass.com
ILLINOIS FLORIDA GEORGIA NEW JERSEY COLORADO TEXAS ARIZONA VIRGINIA MARYLAND

REVISIONS

NO.	DATE	BY	
1	9/14/11	GBS	ADDED 11/16" X 2" SLOT TO ANCHOR DETAILS
2	9/14/11	GBS	REVISED WALPER LIBERAL TO DAMAGED SHIM, ADDED SIZE AND SHIM NOTES
3			
4			
5			
6			

DESIGN ENGINEERING & CONSULTING
2905 N. CROLAND BLVD. - SUITE 100 PH. 972-444-3648 FAX. 972-444-4324
GARLAND, TEXAS 75040

Date	Scale
3-3-11	HALF

Drawing No
4326439

Drawing Title
130PSF
SMALL MISSILE IMPACT
ANCHOR DETAILS

Sheet No
25 / 41

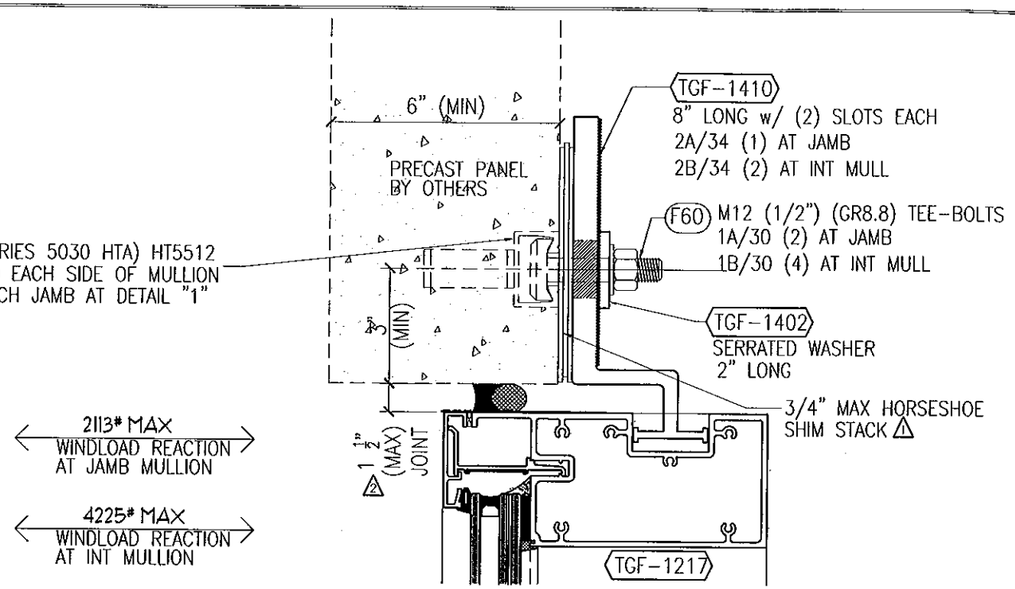

1 HEAD w/ STRAP ANCHOR
AT PRECAST PANEL
ANCHORED w/ HALFEN EMBED

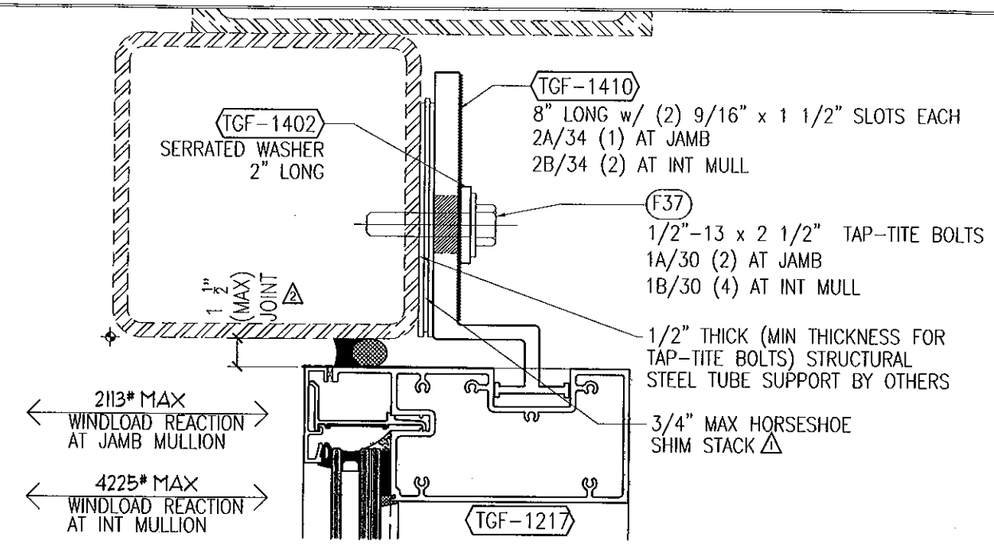

3 HEAD w/ STRAP ANCHOR
AT STRUCTURAL STEEL SUPPORT
ANCHORED w/ 1/2" TAP-TITE BOLTS

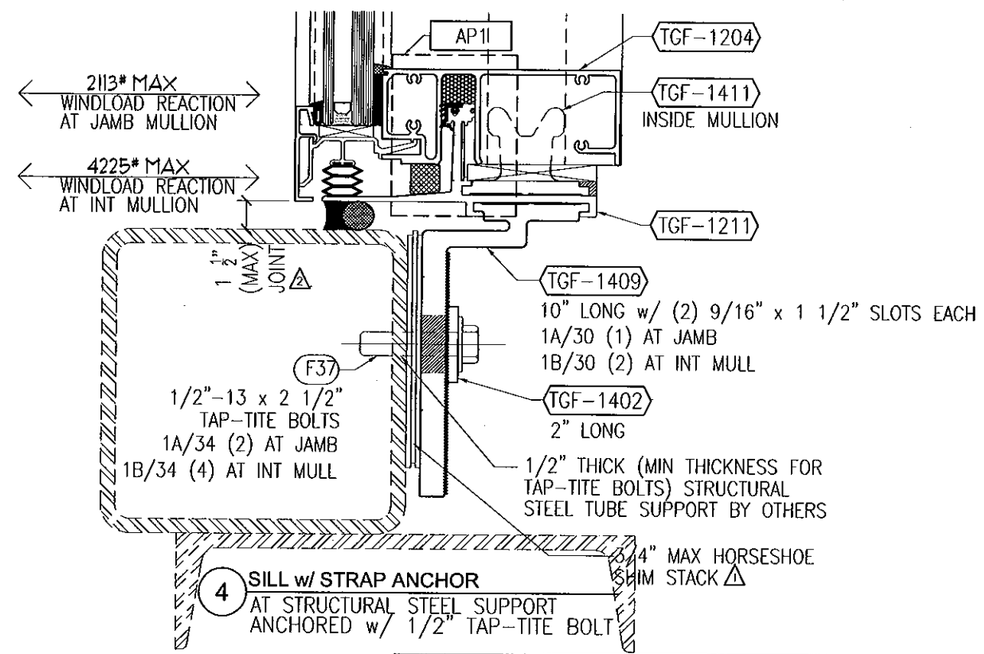

4 SILL w/ STRAP ANCHOR
AT STRUCTURAL STEEL SUPPORT
ANCHORED w/ 1/2" TAP-TITE BOLT

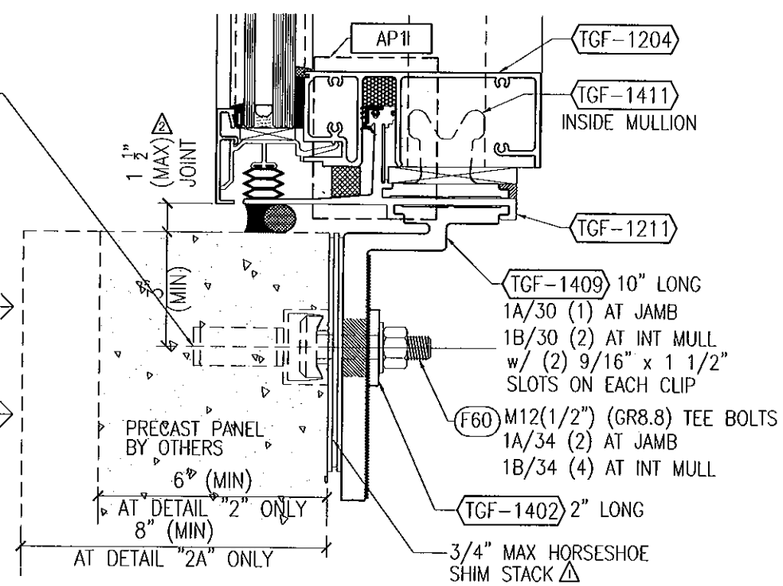

2 SILL w/ STRAP ANCHOR
AT PRECAST PANEL
ANCHORED w/ HALFEN EMBED

2A SILL w/ STRAP ANCHOR AT 8" PRECAST
AT PRECAST PANEL
ANCHORED w/ HALFEN EMBED

AP1 = 1/8" x 3 1/4" ALUMINUM END DAM PLATE (2" LONG) AT JAMBS

FOR MIAMI-DADE CO. B.C.C.O.

Approved as complying with the Florida Building Code
Date 10/20/2011
NOA# 11-0801.05
Miami Dade Product Control
By

JEFFREY H MARSH
LICENSE
No 70018
STATE OF
FLORIDA
PROFESSIONAL ENGINEER
10/5/2011

TRAINOR GLASS COMPANY
1101 13TH STREET WEST RIVIERA BEACH, FLORIDA 33404
PH. (561) 863-7078 FAX (561) 863-7088
www.trainorglass.com
ILLINOIS FLORIDA GEORGIA NEW JERSEY COLORADO TEXAS ARIZONA VIRGINIA MARYLAND

NO.	DATE	BY	REVISIONS
1	8/16/11		UPDATED NOTES FOR SHIM
2	10/06/11		REMOVED MULLION UNDERFILL TO SHIMMED UPGRADED MULLION SIZE
3			
4			
5			
6			

DESIGN ENGINEERING & CONSULTING INC.
2555 N. COLLINS BLVD. - SUITE 110 PH: 972-441-2640
RICHARDSON, TEXAS 75080 FAX: 972-441-4284

Date	Scale
3-3-11	HALF

Drawing No
4326439

Drawing Title
130PSF SMALL MISSILE IMPACT ANCHOR DETAILS

Sheet No
26 / 41

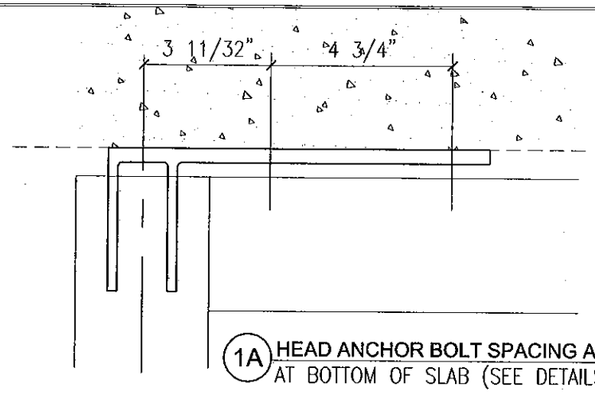

1A HEAD ANCHOR BOLT SPACING AT JAMB (FRONT VIEW)
AT BOTTOM OF SLAB (SEE DETAILS 1 & 7/26)

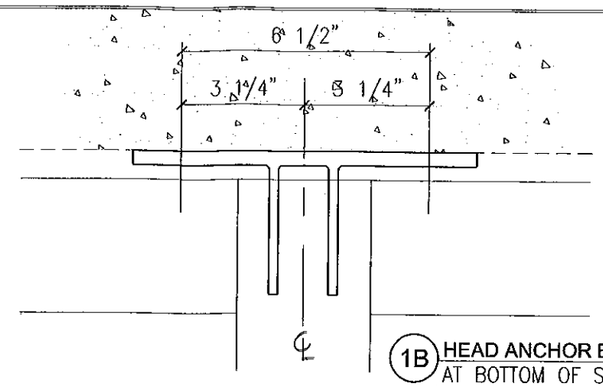

1B HEAD ANCHOR BOLT SPACING AT INT MULLION (FRONT VIEW)
AT BOTTOM OF SLAB (SEE DETAILS 1 & 7/26)

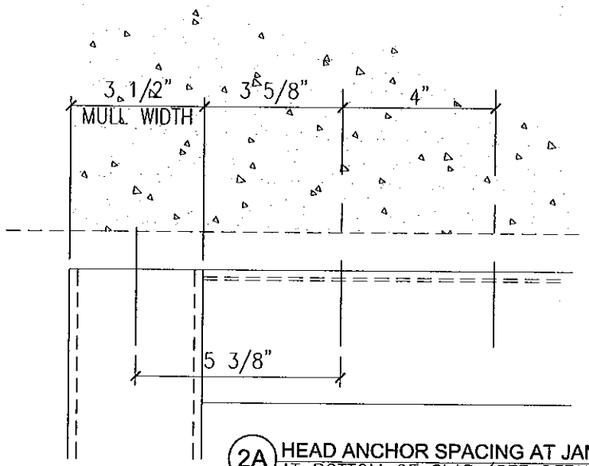

2A HEAD ANCHOR SPACING AT JAMB (FRONT VIEW)
AT BOTTOM OF SLAB (SEE DETAILS 1 & 7/27)

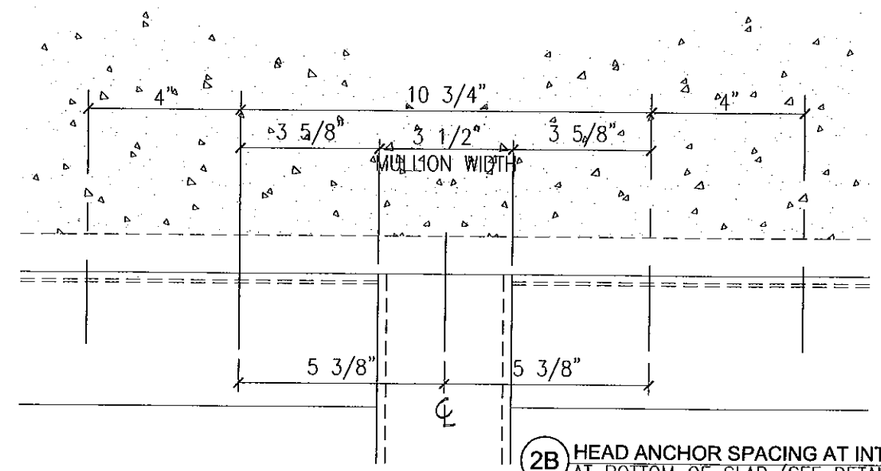

2B HEAD ANCHOR SPACING AT INT MULLION (FRONT VIEW)
AT BOTTOM OF SLAB (SEE DETAILS 1 & 7/27)

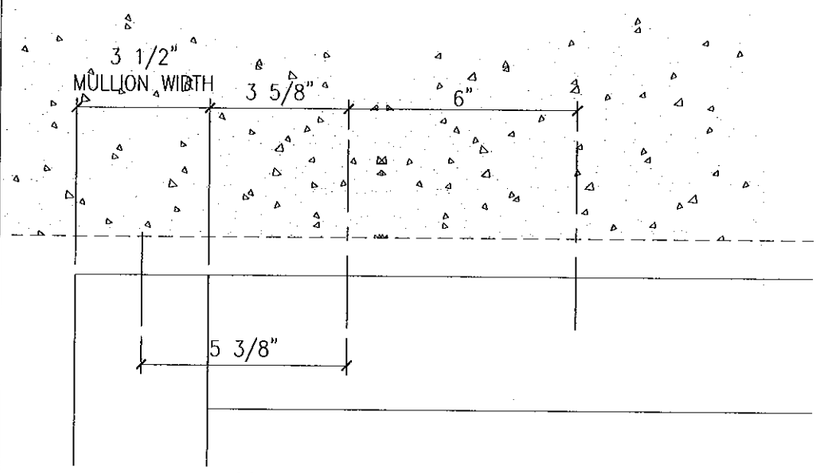

3A HEAD ANCHOR SPACING AT JAMB (FRONT VIEW)
AT BOTTOM OF SLAB (SEE DETAILS 2 & 5/27)

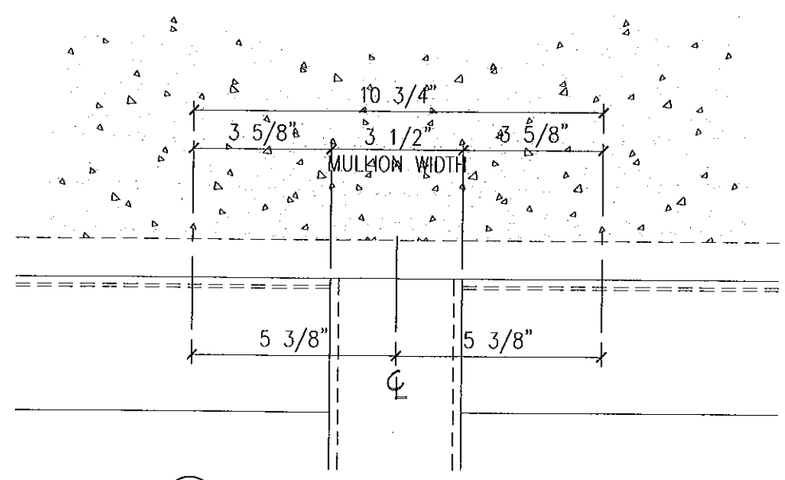

3B HEAD ANCHOR SPACING AT INT MULLION (FRONT VIEW)
AT BOTTOM OF SLAB (SEE DETAILS 2 & 5/27)

FOR MIAMI-DADE CO. B.C.C.O.

Approved as complying with the Florida Building Code
Date 10/20/2011
NOA# 11-0401.05
Miami Dade Product Control
By

JEFFREY H MARSH
LICENSE
No 70018
STATE OF FLORIDA
PROFESSIONAL ENGINEER
10/5/2011

TRAINOR
GLASS COMPANY
1101 13TH STREET WEST RIVIERA BEACH, FLORIDA 33404
PH. (561) 863-7078 FAX (561) 863-7088
www.trainorglass.com
ILLINOIS FLORIDA GEORGIA NEW JERSEY COLORADO TEXAS ARIZONA VIRGINIA MARYLAND

REVISIONS

NO.	DATE	BY
1		
2		
3		
4		
5		
6		

DESIGN ENGINEERING & CONSULTING
2005 N. COLLINS BLVD. - SUITE 100
RICHARDSON, TEXAS 75080
PH: 972-644-0646
FAX: 972-644-0524

Date	Scale
3-3-11	HALF

Drawing No
4326439

Drawing Title
130PSF
SMALL MISSILE IMPACT
ANCHOR LAYOUTS

Sheet No
27 / 41

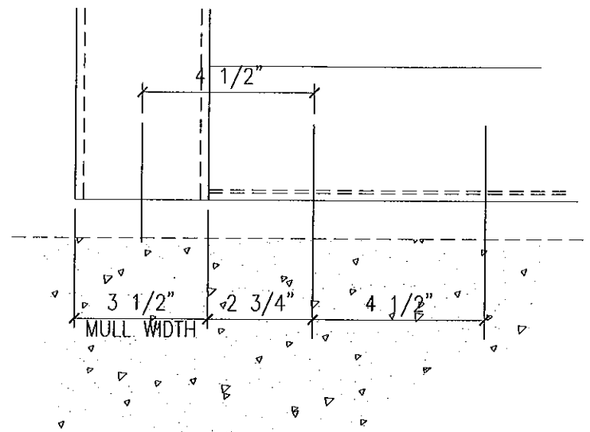

1A SILL ANCHOR SPACING AT JAMB (FRONT VIEW)
AT TOP OF SLAB (SEE DETAILS 2/29)

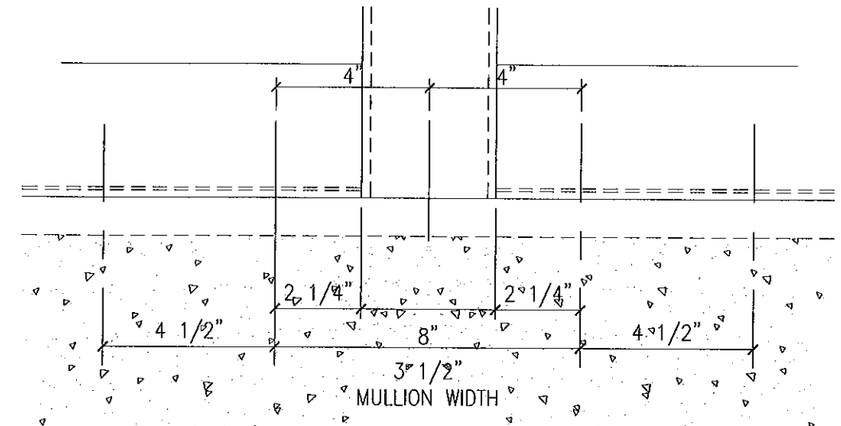

1B SILL ANCHOR SPACING AT INT MULLION (FRONT VIEW)
AT TOP OF SLAB (SEE DETAILS 2/29)

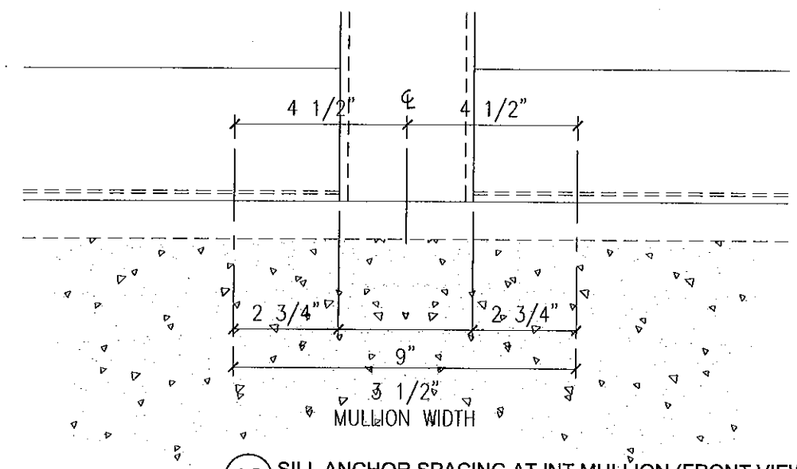

1C SILL ANCHOR SPACING AT INT MULLION (FRONT VIEW)
AT TOP OF SLAB (SEE DETAILS 1, 3, 4 & 5/29)

FOR MIAMI-DADE CO. B.C.C.O.

Approved as complying with the Florida Building Code
Date 10/20/2011
NOA# 11-0401.05
Miami Dade Product Control
By

JEFFREY H MARSH
LICENSE
No 70018
STATE OF FLORIDA
PROFESSIONAL ENGINEER
10/5/2011

TRAINOR
GLASS COMPANY
1101 13TH STREET WEST RIVIERA BEACH, FLORIDA 33404
PH. (561) 863-7078 FAX (561) 863-7088
www.trainorglass.com
ILLINOIS FLORIDA GEORGIA NEW JERSEY COLORADO TEXAS ARIZONA VIRGINIA MARYLAND

REVISIONS

NO.	DATE	BY
1	-	-
2	-	-
3	-	-
4	-	-
5	-	-
6	-	-

DESIGN ENGINEERING & CONSULTING
2005 N. COLLINS BLVD. - SUITE 100 PH: 972-644-0640
RICHARDSON, TEXAS 75080 FAX: 972-644-6234

Date	Scale
3-3-11	HALF

Drawing No
4326439

Drawing Title
130PSF
SMALL MISSILE IMPACT
ANCHOR LAYOUTS

Sheet No
28 / 41

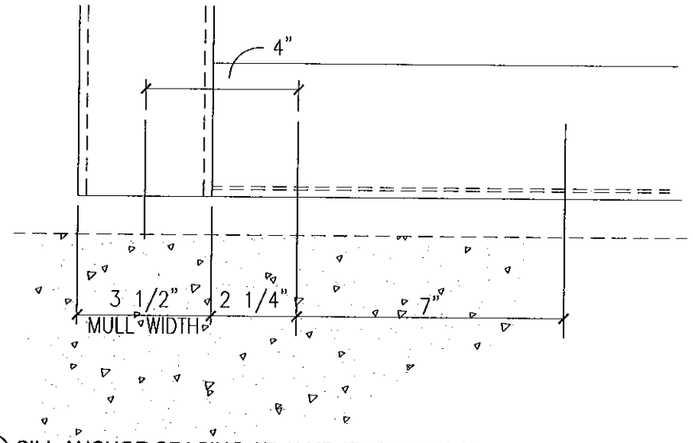

1A SILL ANCHOR SPACING AT JAMB (FRONT VIEW)
AT TOP OF SLAB (SEE DETAILS 2/25)

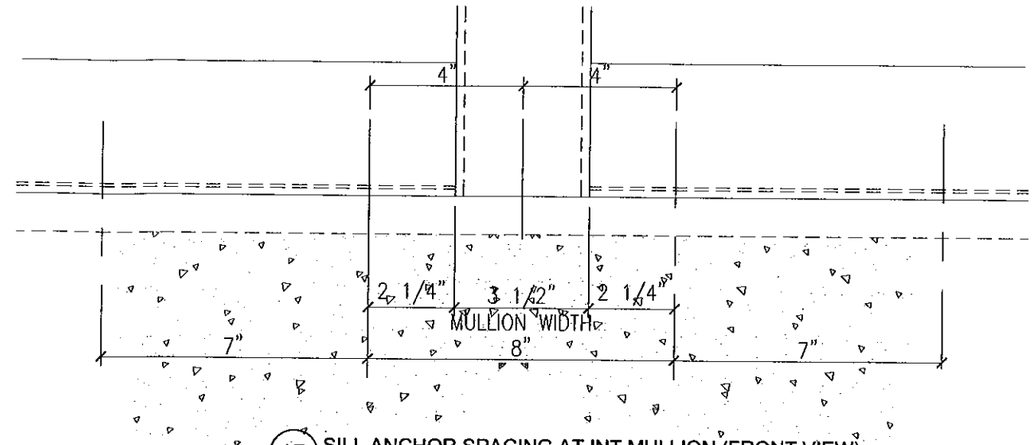

1B SILL ANCHOR SPACING AT INT MULLION (FRONT VIEW)
AT TOP OF SLAB (SEE DETAILS 2/25)

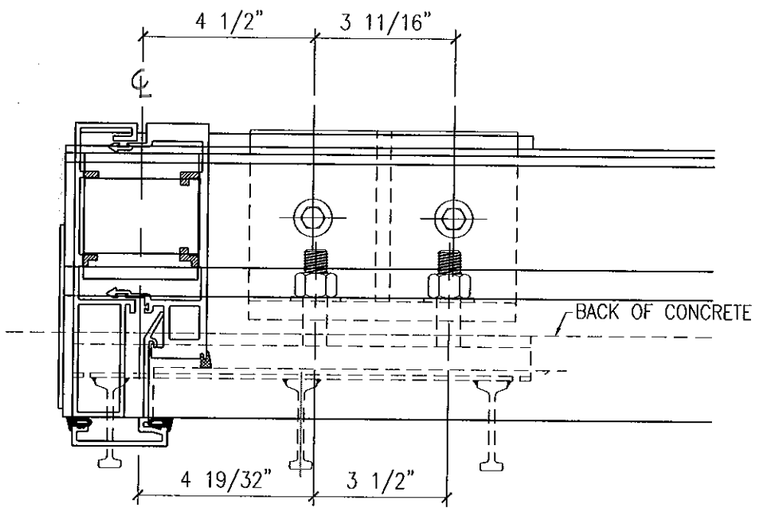

2A SILL ANCHOR SPACING AT JAMB (PLAN VIEW)
AT PRECAST PANEL & ANCHOR CLIPS (SEE DETAILS 6 & 7/24 AND 6 & 7/25)

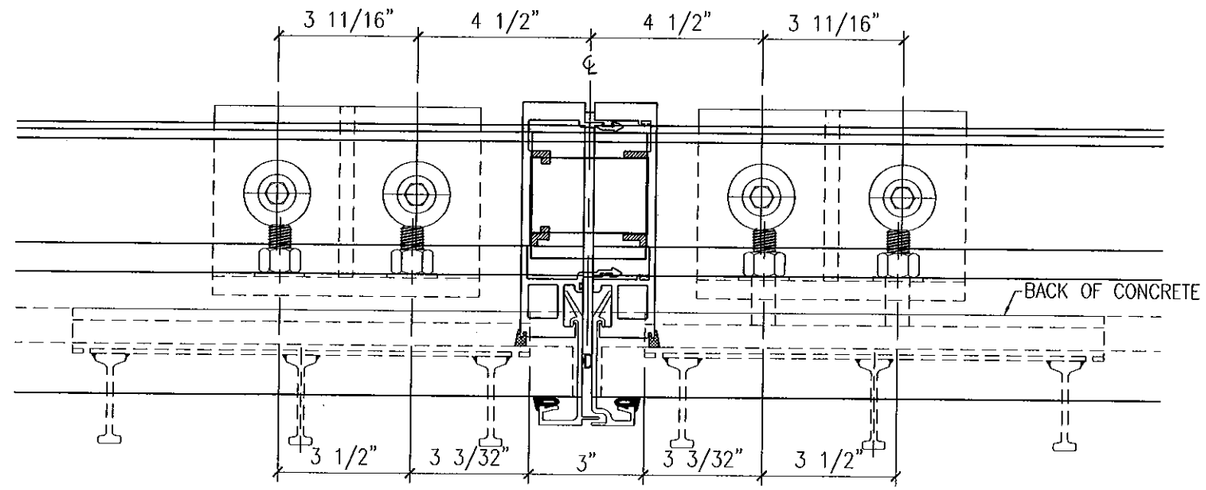

2B SILL ANCHOR AT INT MULL (PLAN VIEW)
AT PRECAST PANEL & ANCHOR CLIPS (SEE DETAILS 6 & 7/24 AND 6 & 7/25)

FOR MIAMI-DADE CO. B.C.C.O.

Approved as complying with the
Florida Building Code
Date 10/20/2011
NOA# 11-0401.05
Miami Dade Product Control
By

JEFFREY H MARSH
LICENSE
No 70018
STATE OF
FLORIDA
PROFESSIONAL ENGINEER
10/5/2011

TRAINOR
GLASS COMPANY
1101 13TH STREET WEST RIVIERA BEACH, FLORIDA 33404
PH. (561) 863-7078 FAX (561) 863-7088
www.trainorglass.com
ILLINOIS FLORIDA GEORGIA NEW JERSEY COLORADO TEXAS ARIZONA VIRGINIA MARYLAND

NO.	DATE	BY	REVISIONS
1			
2			
3			
4			
5			
6			

DESIGN ENGINEERING & CONSULTING
2905 N. COLLINS BLVD. - SUITE 100 PH: 972-644-0640
RICHARDSON, TEXAS 75080 FAX: 972-644-4294

Date	Scale
3-3-11	QUARTER

Drawing No
4326439

Drawing Title
130PSF
SMALL MISSILE IMPACT
ANCHOR LAYOUTS

Sheet No
29 / 41

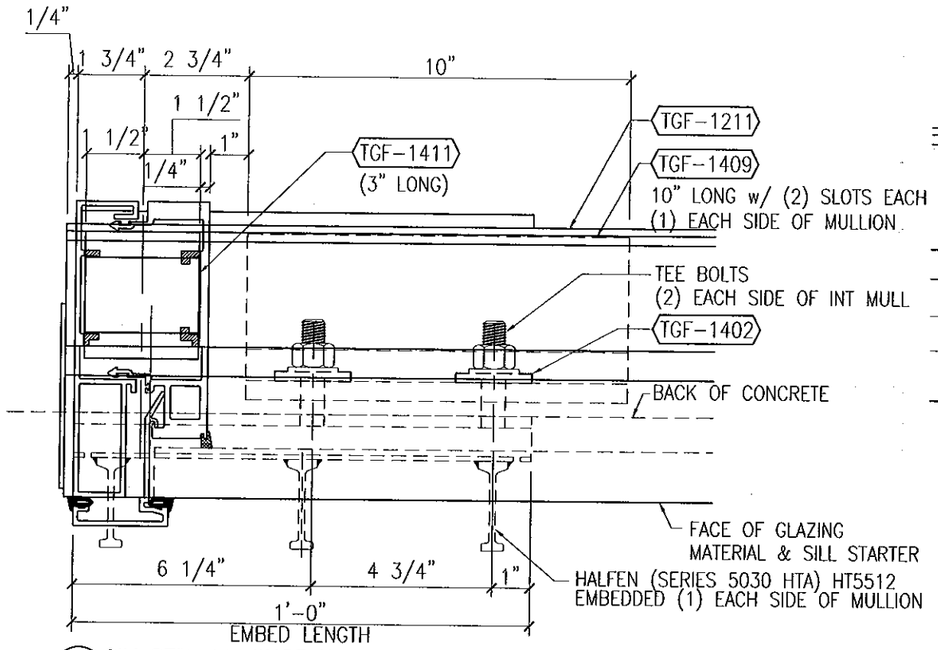

1A SILL STRAP ANCHOR AT JAMB (PLAN VIEW)
AT PRECAST PANEL & STRAP ANCHOR CLIPS (SEE DETAILS 2 & 4/30)
ANCHORED w/ HALFEN EMBED

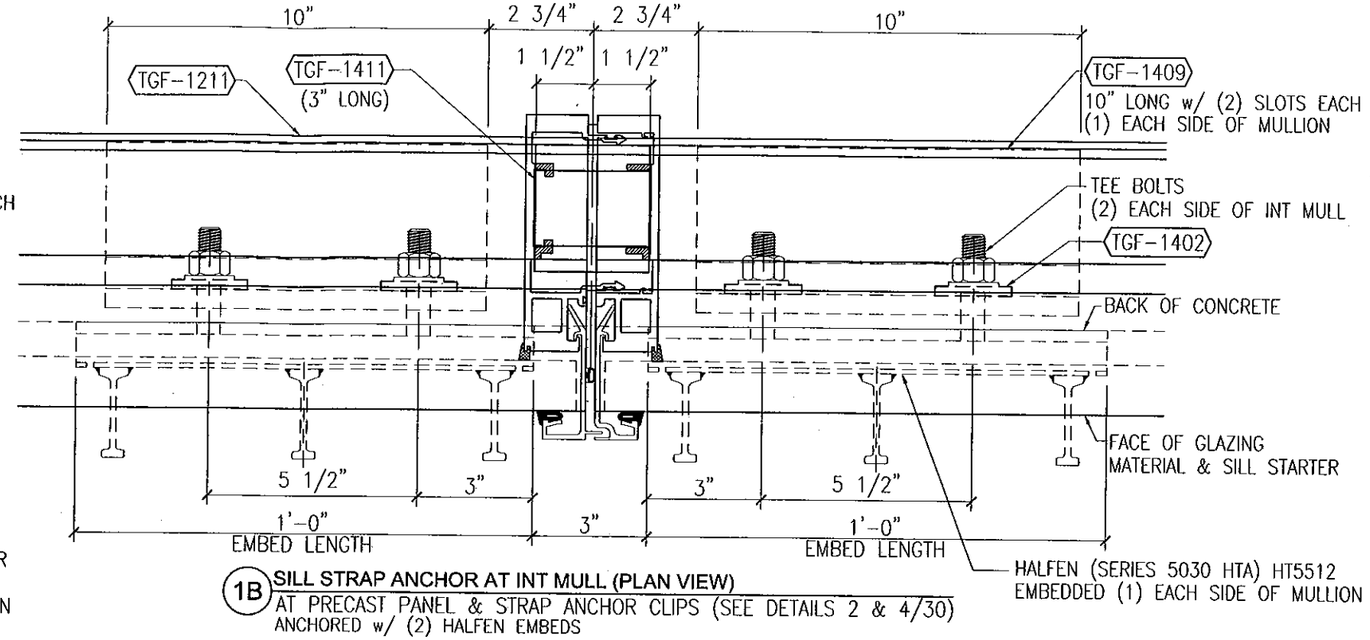

1B SILL STRAP ANCHOR AT INT MULL (PLAN VIEW)
AT PRECAST PANEL & STRAP ANCHOR CLIPS (SEE DETAILS 2 & 4/30)
ANCHORED w/ (2) HALFEN EMBEDS

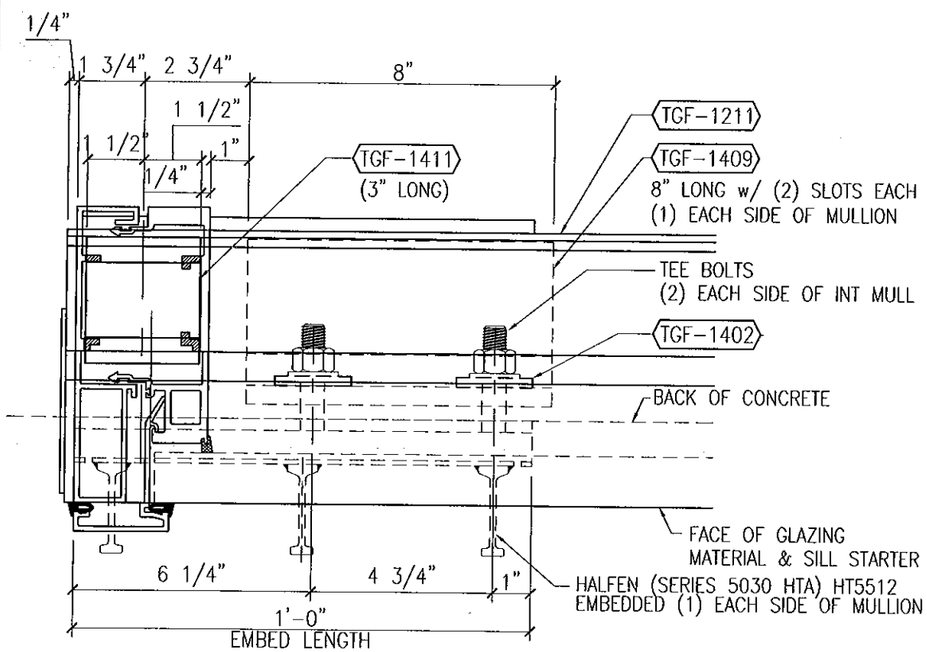

2A HEAD STRAP ANCHOR AT JAMB (PLAN VIEW)
AT PRECAST PANEL & STRAP ANCHOR CLIPS (SEE DETAILS 1 & 3/30)
ANCHORED w/ HALFEN EMBED

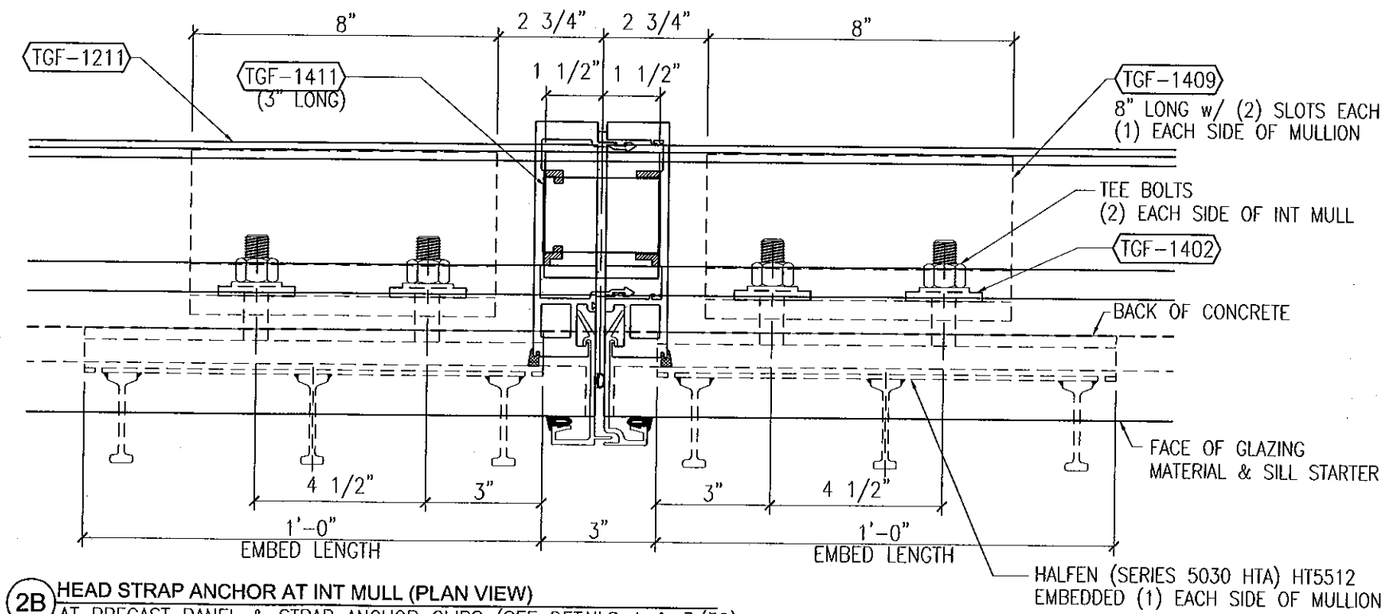

2B HEAD STRAP ANCHOR AT INT MULL (PLAN VIEW)
AT PRECAST PANEL & STRAP ANCHOR CLIPS (SEE DETAILS 1 & 3/30)
ANCHORED w/ (2) HALFEN EMBEDS

FOR MIAMI-DADE CO. B.C.C.O.

Approved as complying with the Florida Building Code
Date 10/20/2011
NOA# 11-0401.06
Miami Dade Product Control
By

JEFFREY H MARSH
LICENSE
No 70018
STATE OF FLORIDA
PROFESSIONAL ENGINEER
10/5/2011

GLASS COMPANY
1101 13TH STREET WEST RIVIERA BEACH, FLORIDA 33404
PH. (561) 863-7078 FAX (561) 863-7088
www.trainorglass.com
TRAINOR
ILLINOIS FLORIDA GEORGIA NEW JERSEY COLORADO TEXAS ARIZONA VIRGINIA MARYLAND

REVISIONS

NO.	DATE	BY
1		
2		
3		
4		
5		
6		

DESIGN ENGINEERING & CONSULTING

Date	Scale
3-3-11	QUARTER

Drawing No
4326439

Drawing Title
130PSF
SMALL MISSILE IMPACT
ANCHOR LAYOUTS

Sheet No
30 / 41

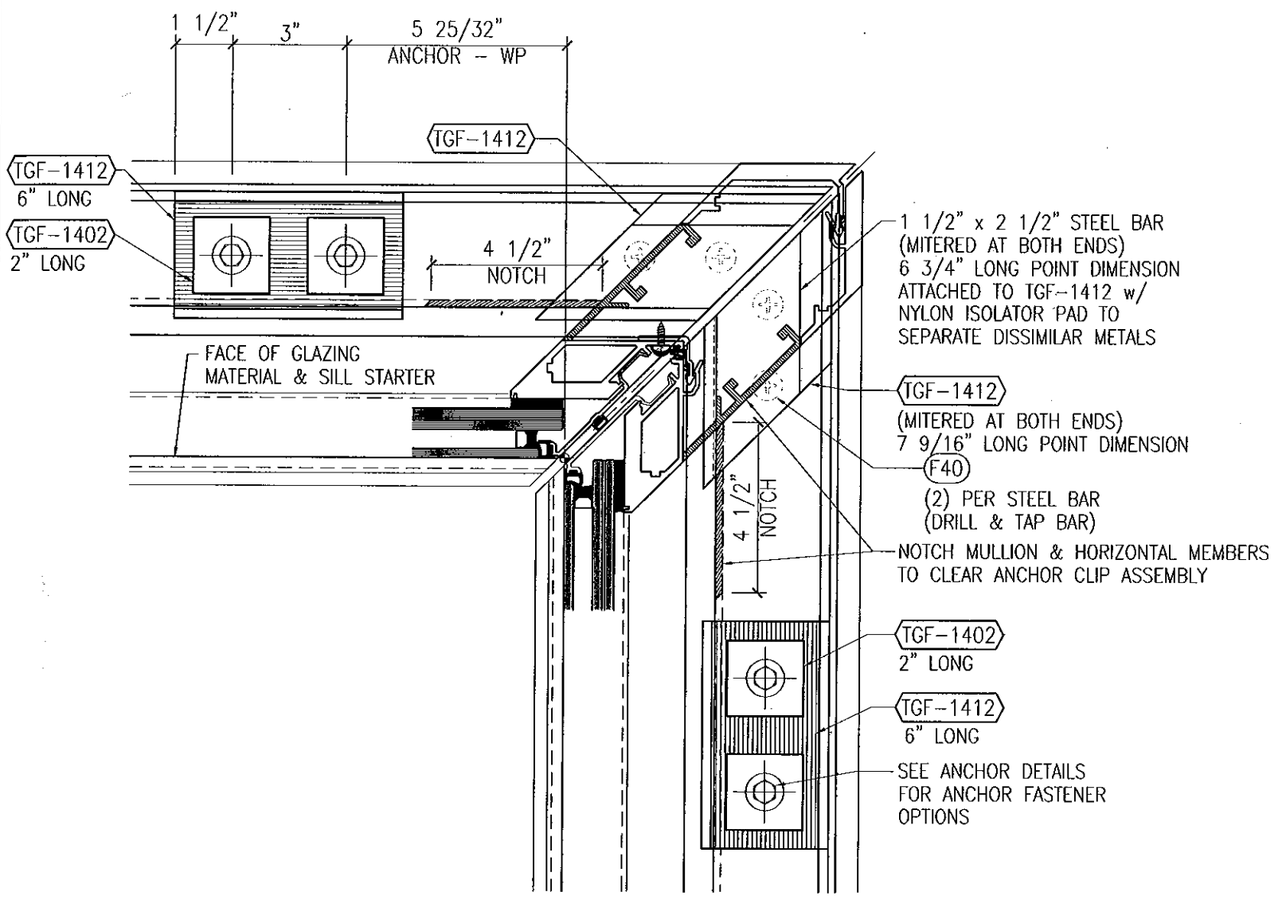

1 SILL ANCHOR AT INSIDE CORNER MULL (PLAN VIEW)
AT SINGLE–SPAN & MULTI–SPAN SILLS

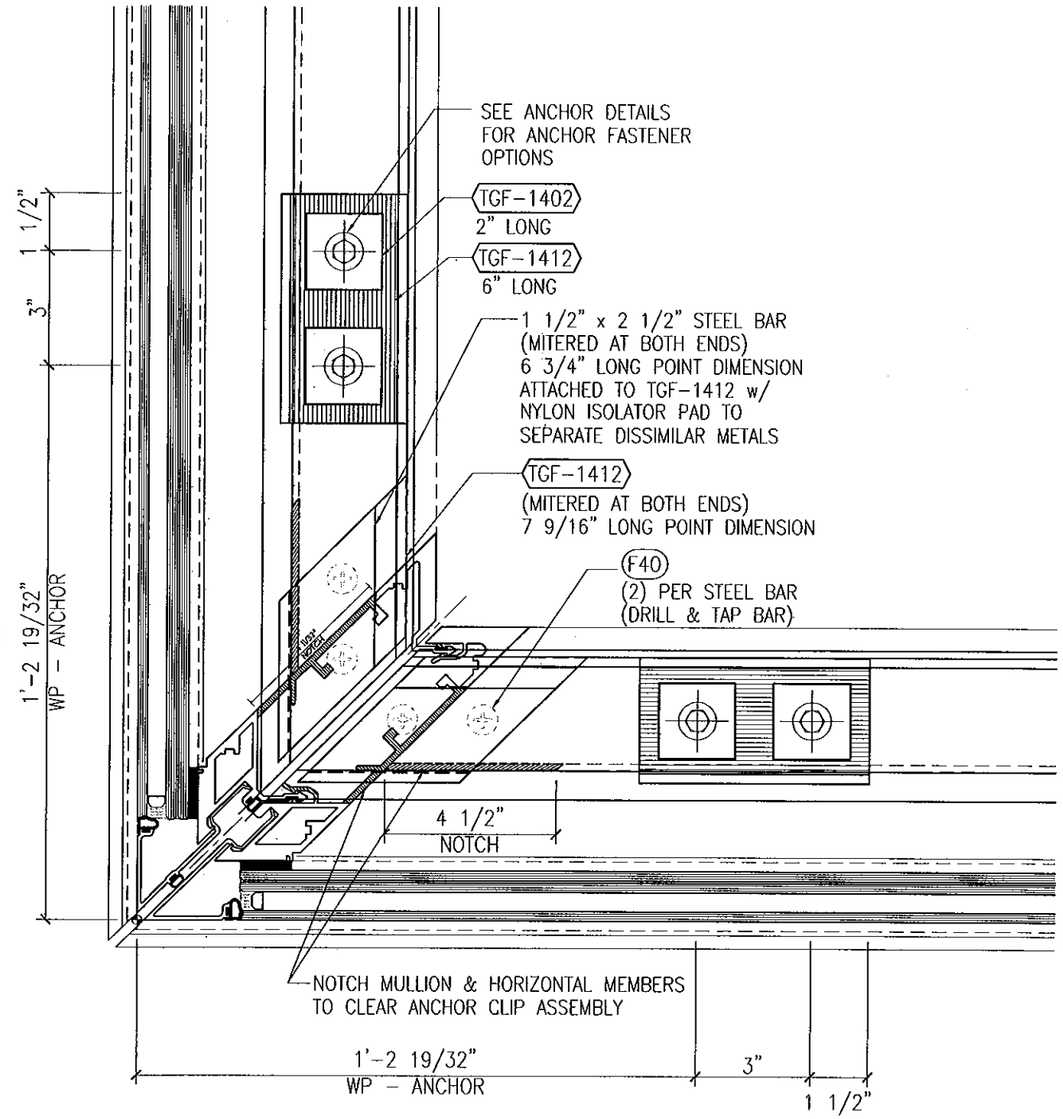

2 SILL ANCHOR AT OUTSIDE CORNER MULL (PLAN VIEW)
AT SINGLE–SPAN & MULTI–SPAN SILLS

FOR MIAMI-DADE CO. B.C.C.O.

Approved as complying with the
Florida Building Code
Date 10/20/2011
NOA# 11-0824.05
Miami Dade Product Control
By

JEFFREY H MARSH
LICENSE
No 70018
STATE OF
FLORIDA
PROFESSIONAL ENGINEER
10/5/2011

GLASS COMPANY
1101 13TH STREET WEST RIVIERA BEACH, FLORIDA 33404
PH. (561) 863-7078 FAX (561) 863-7088
www.trainorglass.com
TRAINOR
ILLINOIS FLORIDA GEORGIA NEW JERSEY COLORADO TEXAS ARIZONA VIRGINIA MARYLAND

REVISIONS

NO.	DATE	BY

DESIGN ENGINEERING & CONSULTING Inc.
2855 N. CELTON BLVD. – SUITE 100
BROWNSVILLE, TEXAS 78526
PH. 972-544-0840
FAX 972-444-4284

Date	Scale
3-3-11	QUARTER

Drawing No
4326439

Drawing Title
130PSF
SMALL MISSILE IMPACT
ANCHOR LAYOUTS

Sheet No
31 / 41

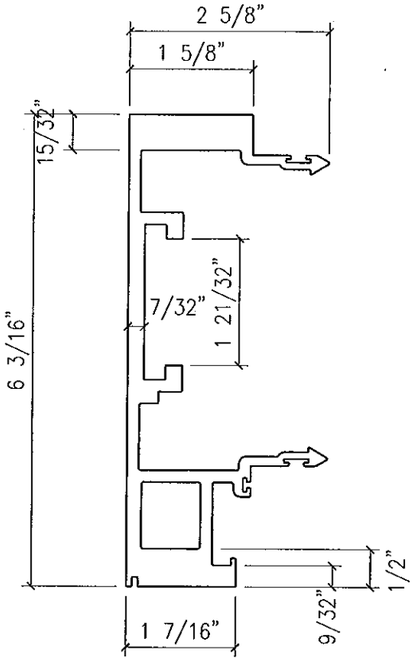

EXTRUSION NO:	TGF-1101
DESCRIPTION:	MALE MULLION
Ixx	16.527
Sxx	5.299
ALLOY	6063-T6

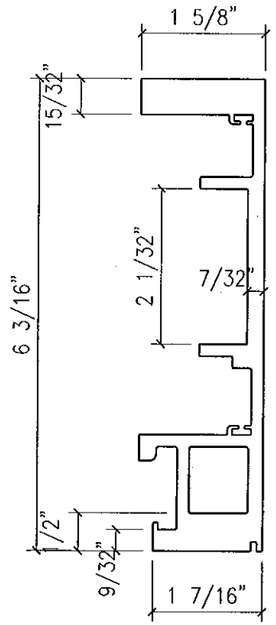

EXTRUSION NO:	TGF-1102
DESCRIPTION:	FEMALE MULLION
Ixx	15.478
Sxx	4.865
ALLOY	6063-T6

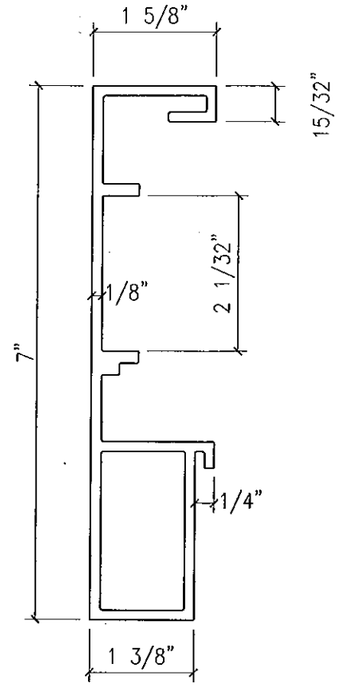

EXTRUSION NO:	TGF-1103
DESCRIPTION:	JAMB MULLION (FOR 9/16" GLAZING)
Ixx	.
Sxx	.
ALLOY	6063-T6

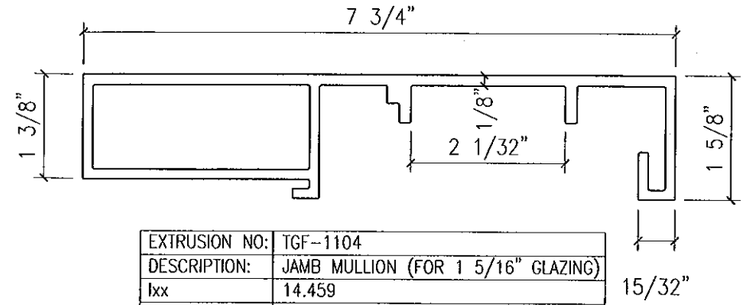

EXTRUSION NO:	TGF-1104
DESCRIPTION:	JAMB MULLION (FOR 1 5/16" GLAZING)
Ixx	14.459
Sxx	3.608
ALLOY	6063-T6

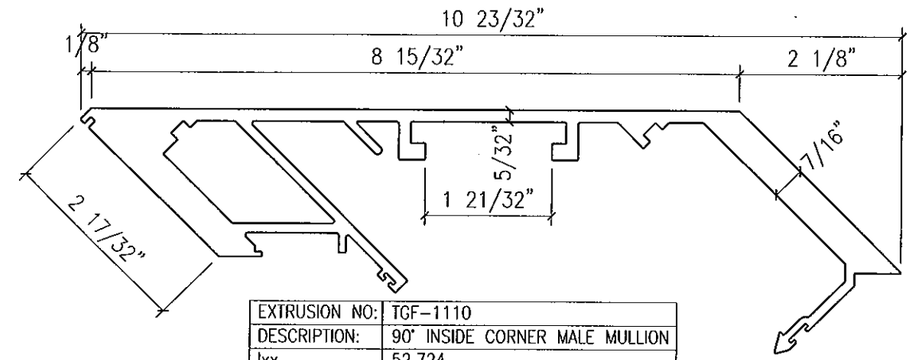

EXTRUSION NO:	TGF-1110
DESCRIPTION:	90° INSIDE CORNER MALE MULLION
Ixx	52.724
Sxx	9.210
ALLOY	6063-T6

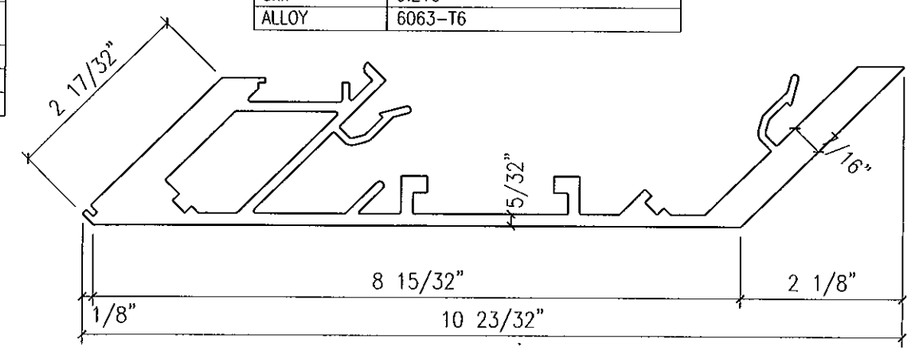

EXTRUSION NO:	TGF-1111
DESCRIPTION:	90° INSIDE CORNER FEMALE MULLION
Ixx	51.199
Sxx	8.850
ALLOY	6063-T6

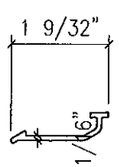

EXTRUSION NO:	TGF-1114
DESCRIPTION:	ANTI BUCKLING CLIP
Ixx	0.001
Sxx	0.005
ALLOY	6063-T6

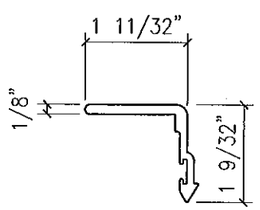

EXTRUSION NO:	TGF-1115
DESCRIPTION:	90° I.S. CORNER ANTI BUCKLING CLIP
Ixx	0.049
Sxx	0.053
ALLOY	6063-T6

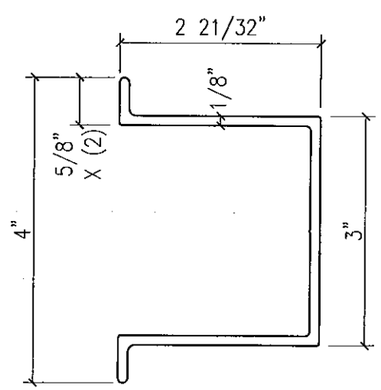

EXTRUSION NO:	TGF-1116
DESCRIPTION:	JAMB CONNECTION CLIP
Ixx	1.964
Sxx	0.982
ALLOY	6063-T6

FOR MIAMI-DADE CO. B.C.C.O.

Approved as complying with the Florida Building Code
Date 10/20/2011
NOA# 11-0401.05
Miami Dade Product Control
By

JEFFREY H MARSH
LICENSE
No 70018
STATE OF FLORIDA
PROFESSIONAL ENGINEER
10/5/2011

TRAINOR GLASS COMPANY
1101 13TH STREET WEST RIVIERA BEACH, FLORIDA 33404
PH. (561) 863-7078 FAX (561) 863-7088
www.trainorglass.com
ILLINOIS FLORIDA GEORGIA NEW JERSEY COLORADO TEXAS ARIZONA VIRGINIA MARYLAND

REVISIONS

NO.	DATE	BY
1		
2		
3		
4		
5		
6		

DESIGN ENGINEERING & CONSULTING
3905 N. COLLINS BLVD. - SUITE 100
ARLINGTON, TEXAS 75006
PH: 972-644-0840
FAX: 972-644-0834

Date	Scale
3-3-11	HALF

Drawing No
4326439

Drawing Title
130 PSF
SMALL MISSILE IMPACT EXTRUSIONS

Sheet No
32 / 41

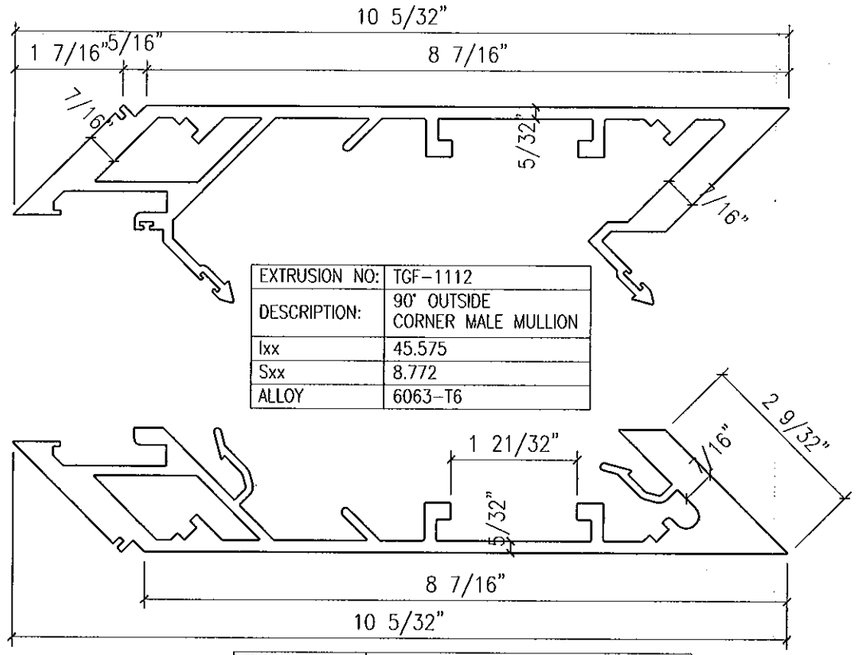

EXTRUSION NO:	TGF-1112
DESCRIPTION:	90° OUTSIDE CORNER MALE MULLION
Ixx	45.575
Sxx	8.772
ALLOY	6063-T6

EXTRUSION NO:	TGF-1113
DESCRIPTION:	90° OUTSIDE CORNER FEMALE MULLION
Ixx	46.015
Sxx	8.702
ALLOY	6063-T6

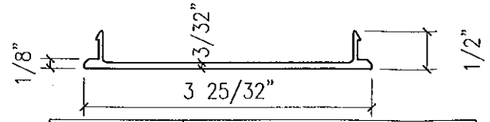

EXTRUSION NO:	TGF-1202
DESCRIPTION:	HEAD HORIZONTAL FILLER
Ixx	0.525
Sxx	0.278
ALLOY	6063-T5

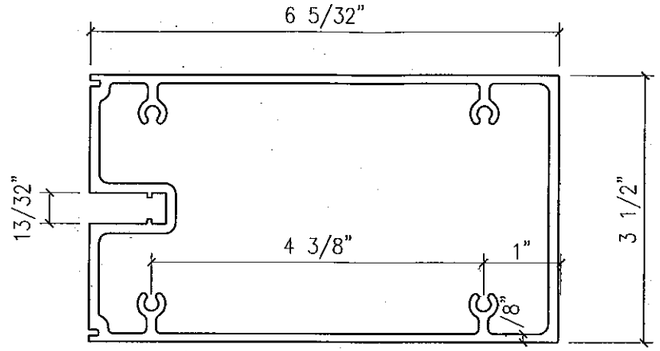

EXTRUSION NO:	TGF-1203
DESCRIPTION:	3 1/2" INT HORIZONTAL
Ixx	15.478
Sxx	4.680
ALLOY	6063-T6

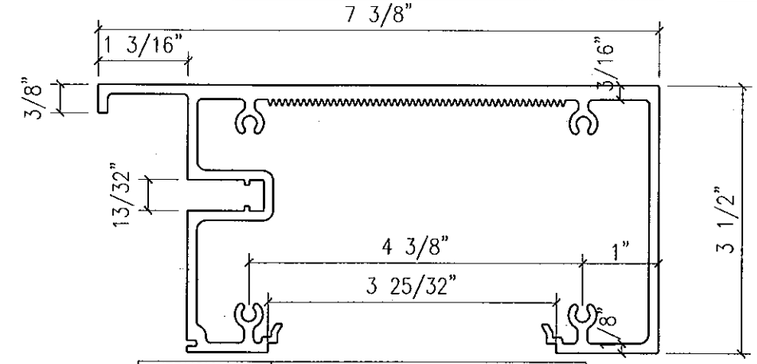

EXTRUSION NO:	TGF-1201
DESCRIPTION:	HEAD HORIZONTAL (1 5/16" INFILLS)
Ixx	19.482
Sxx	4.641
ALLOY	6063-T6

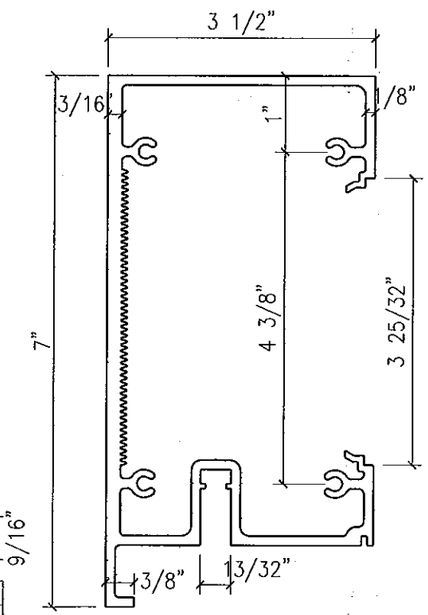

EXTRUSION NO:	TGF-1221
DESCRIPTION:	HEAD HORIZONTAL (9/16" INFILLS)
Ixx	.
Sxx	.
ALLOY	6063-T6

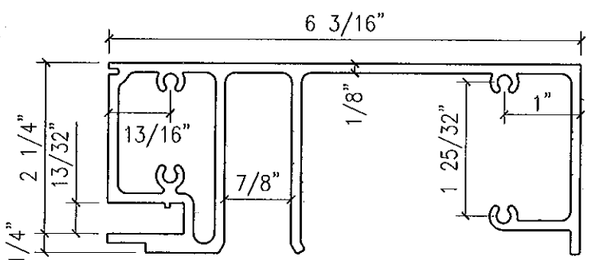

EXTRUSION NO:	TGF-1204
DESCRIPTION:	STACK HORIZONTAL SILL
Ixx	12.536
Sxx	3.596
ALLOY	6063-T6

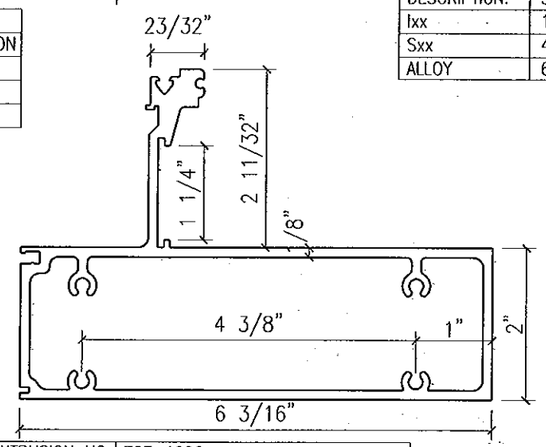

EXTRUSION NO:	TGF-1206
DESCRIPTION:	EXPANSION HORIZONTAL GUTTER
Ixx	11.170
Sxx	3.323
ALLOY	6063-T6

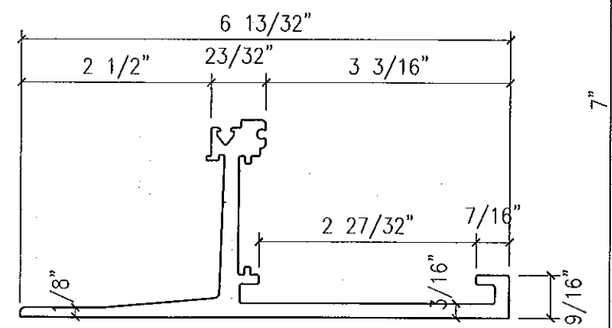

EXTRUSION NO:	TGF-1210
DESCRIPTION:	LIGHT SILL STARTER FOR 9/16" GLASS
Ixx	.
Sxx	.
ALLOY	6063-T6

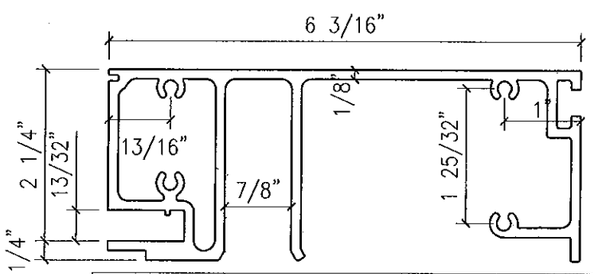

EXTRUSION NO:	TGF-1205
DESCRIPTION:	STACK HORIZ'L SILL w/ STOOL TRIM POCKET
Ixx	12.536
Sxx	3.596
ALLOY	6063-T6

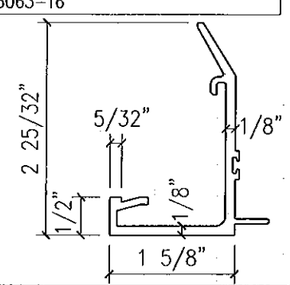

EXTRUSION NO:	TGF-1368
DESCRIPTION:	3 1/2" MALE FACE CAP (9/16" GLAZING)
Ixx	.
Sxx	.
ALLOY	6063-T5

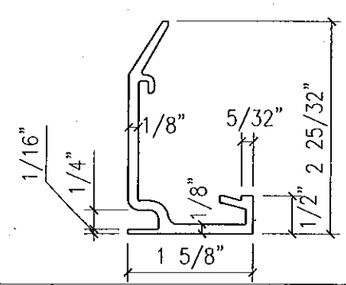

EXTRUSION NO:	TGF-1369
DESCRIPTION:	3 1/2" FEMALE FACE CAP (9/16" GLAZING)
Ixx	.
Sxx	.
ALLOY	6063-T5

FOR MIAMI-DADE CO. B.C.C.O.

Approved as complying with the Florida Building Code
Date 10/20/2011
NOA# 11-0401.05
Miami Dade Product Control
By

JEFFREY H MARSH
LICENSE
No 70018
STATE OF
FLORIDA
PROFESSIONAL ENGINEER
10/5/2011

GLASS COMPANY
1101 13TH STREET WEST RIVIERA BEACH, FLORIDA 33404
PH. (561) 863-7078 FAX (561) 863-7088
www.trainorglass.com
TRAINOR
ILLINOIS FLORIDA GEORGIA NEW JERSEY COLORADO TEXAS ARIZONA VIRGINIA MARYLAND

NO.	DATE	BY	REVISIONS

DESIGN ENGINEERING & CONSULTING Inc.
3906 N. COLLINS BLVD. - SUITE 100
ARLINGTON, TEXAS 76005
PH: 972-544-5646
FAX: 972-544-4084

Date	Scale
3-3-11	HALF

Drawing No
4326439

Drawing Title
130 PSF SMALL MISSILE IMPACT EXTRUSIONS

Sheet No
33 / 41

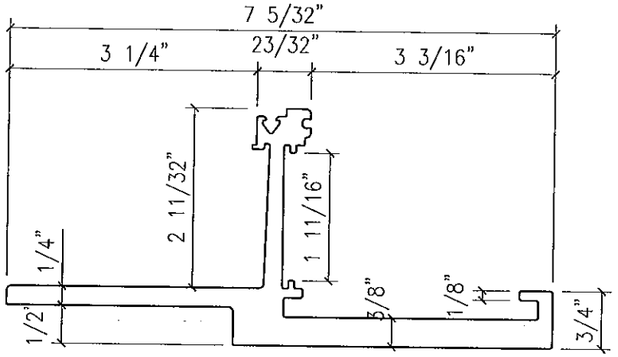

EXTRUSION NO:	TGF-1207
DESCRIPTION:	HEAVY SILL STARTER FOR 1 5/16" GLASS
Ixx	.
Sxx	.
ALLOY	6063-T6

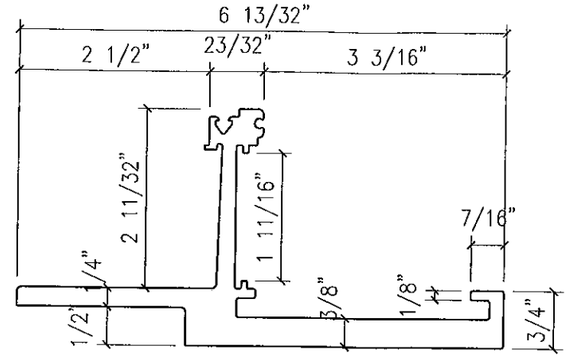

EXTRUSION NO:	TGF-1208
DESCRIPTION:	HEAVY SILL STARTER FOR 9/16" GLASS
Ixx	.
Sxx	.
ALLOY	6063-T6

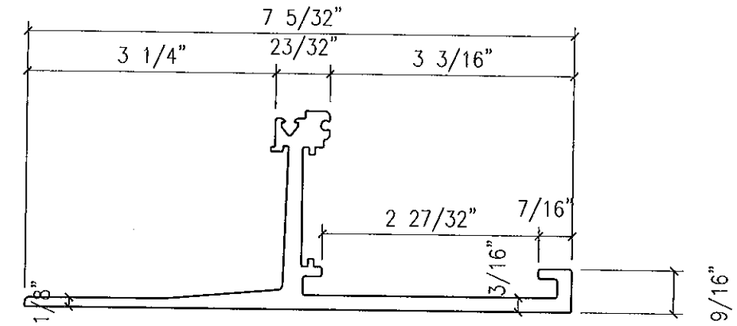

EXTRUSION NO:	TGF-1209
DESCRIPTION:	LIGHT SILL STARTER FOR 1 5/16" GLASS
Ixx	.
Sxx	.
ALLOY	6063-T6

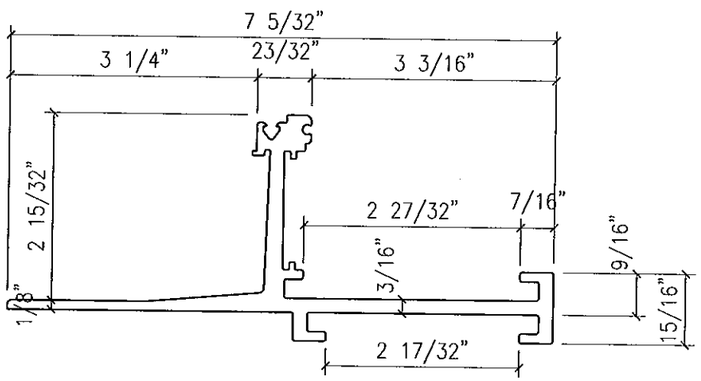

EXTRUSION NO:	TGF-1211
DESCRIPTION:	SILL STARTER FOR 1 5/16" GLASS AT STRAP ANCHOR
Ixx	.
Sxx	.
ALLOY	6063-T6

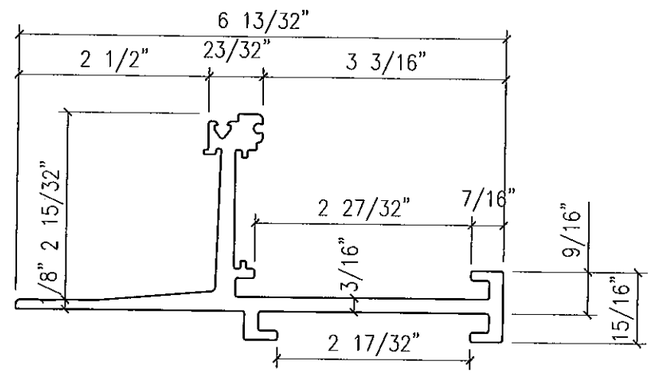

EXTRUSION NO:	TGF-1212
DESCRIPTION:	SILL STARTER FOR 9/16" GLASS AT STRAP ANCHOR
Ixx	.
Sxx	.
ALLOY	6063-T6

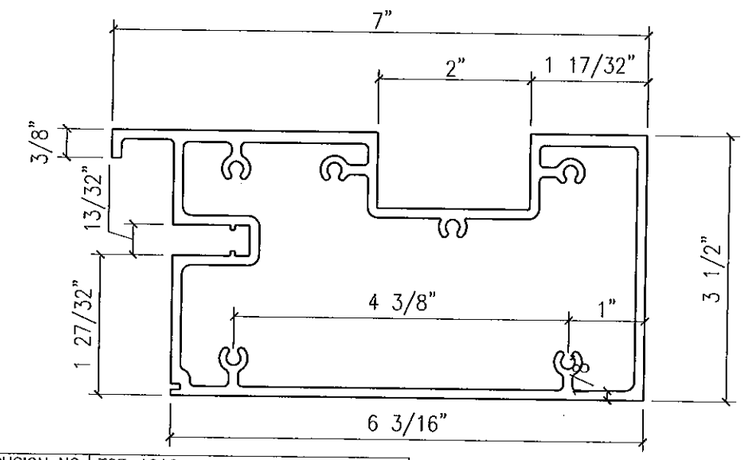

EXTRUSION NO:	TGF-1216
DESCRIPTION:	HEAD HORIZ'L FOR 9/16" GLASS w/ STRAP ANCHOR
Ixx	.
Sxx	.
ALLOY	6063-T6

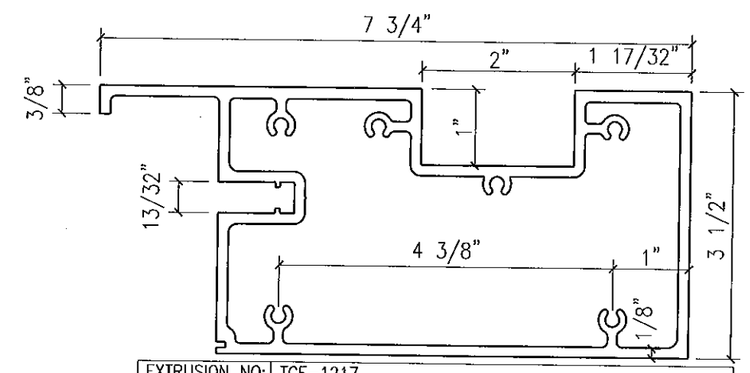

EXTRUSION NO:	TGF-1217
DESCRIPTION:	HEAD HORIZ'L FOR 1 5/16" GLASS w/ STRAP ANCHOR
Ixx	11.170
Sxx	3.323
ALLOY	6063-T6

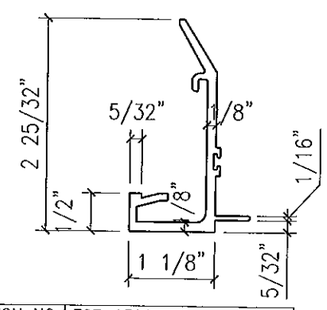

EXTRUSION NO:	TGF-1301
DESCRIPTION:	2 1/2" MALE FACE CAP FOR (9/16" GLAZING)
Ixx	.
Sxx	.
ALLOY	6063-T5

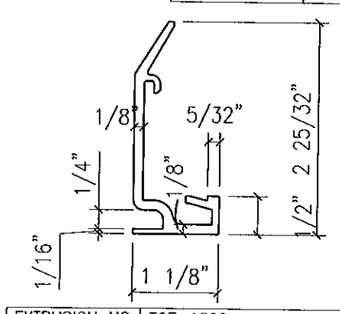

EXTRUSION NO:	TGF-1302
DESCRIPTION:	2 1/2" FEMALE FACE CAP FOR (9/16" GLAZING)
Ixx	.
Sxx	.
ALLOY	6063-T5

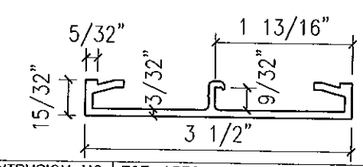

EXTRUSION NO:	TGF-1332
DESCRIPTION:	3 1/2" INT HORIZ FACE CAP
Ixx	.
Sxx	.
ALLOY	6063-T5

FOR MIAMI-DADE CO. B.C.C.O.

Approved as complying with the Florida Building Code
Date 10/20/2011
NOA# 11-0401.06
Miami Dade Product Control
By

JEFFREY H MARSH
LICENSE
No 70018
STATE OF FLORIDA
PROFESSIONAL ENGINEER
10/5/2011

GLASS COMPANY
1101 13TH STREET WEST RIVIERA BEACH, FLORIDA 33404
PH. (561) 863-7078 FAX (561) 863-7088
www.trainorglass.com
TRAINOR
ILLINOIS FLORIDA GEORGIA NEW JERSEY COLORADO TEXAS ARIZONA VIRGINIA MARYLAND

REVISIONS

NO.	DATE	BY

DESIGN ENGINEERING & CONSULTING Inc.
3905 N. COLLINS BOTL. - SUITE 100
DESOTO, TEXAS 75115
PH: 972-544-2640
FAX: 972-544-4234

Date	Scale
3-3-11	HALF

Drawing No
4326439

Drawing Title
130 PSF SMALL MISSILE IMPACT EXTRUSIONS

Sheet No
34 / 41

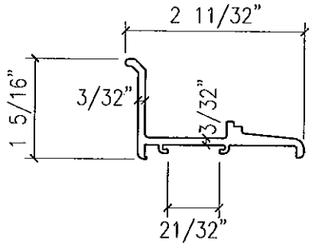

EXTRUSION NO:	TGF-1303
DESCRIPTION:	GLAZING ADAPTER FOR (9/16" CAPTURED HEAD)
Ixx	.
Sxx	.
ALLOY	6063-T5

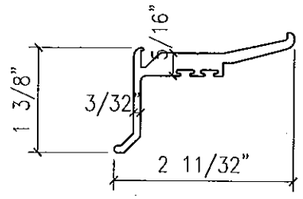

EXTRUSION NO:	TGF-1304
DESCRIPTION:	GLAZING ADAPTER FOR (9/16" CAPTURED STACK HORIZ)
Ixx	.
Sxx	.
ALLOY	6063-T5

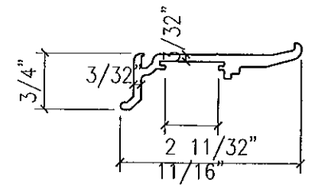

EXTRUSION NO:	TGF-1305
DESCRIPTION:	GLAZING ADAPTER FOR (9/16" CAPTURED INT HORIZ)
Ixx	.
Sxx	.
ALLOY	6063-T5

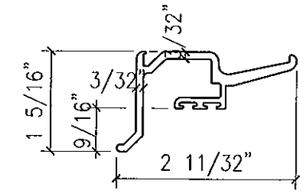

EXTRUSION NO:	TGF-1306
DESCRIPTION:	GLAZING ADAPTER FOR (9/16" CAPTURED RIBBON SILL STARTER)
Ixx	.
Sxx	.
ALLOY	6063-T5

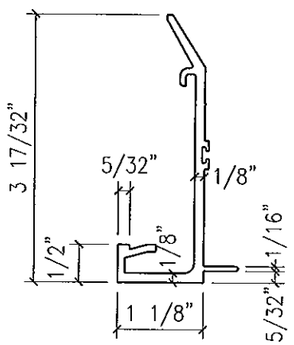

EXTRUSION NO:	TGF-1311
DESCRIPTION:	2 1/2" MALE FACE CAP FOR (1 5/16" GLAZING)
Ixx	.
Sxx	.
ALLOY	6063-T5

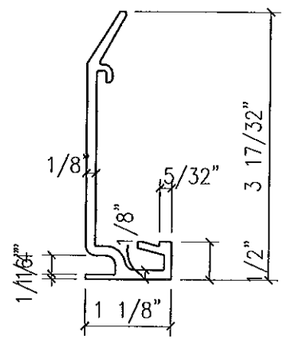

EXTRUSION NO:	TGF-1312
DESCRIPTION:	2 1/2" FEMALE FACE CAP FOR (1 5/16" GLAZING)
Ixx	.
Sxx	.
ALLOY	6063-T5

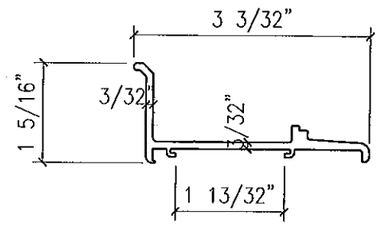

EXTRUSION NO:	TGF-1313
DESCRIPTION:	GLAZING ADAPTER (1 5/16" CAPTURED HEAD)
Ixx	.
Sxx	.
ALLOY	6063-T5

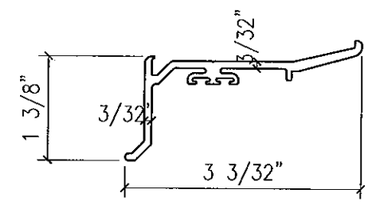

EXTRUSION NO:	TGF-1314
DESCRIPTION:	GLAZING ADAPTER FOR (1 5/16" CAPTURED STACK HORIZ)
Ixx	.
Sxx	.
ALLOY	6063-T5

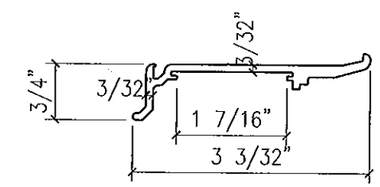

EXTRUSION NO:	TGF-1315
DESCRIPTION:	GLAZING ADAPTER FOR (1 5/16" CAPTURED INT HORIZ)
Ixx	.
Sxx	.
ALLOY	6063-T5

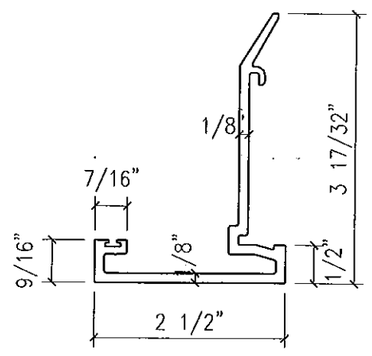

EXTRUSION NO:	TGF-1325
DESCRIPTION:	2 1/2" JAMB FACE CAP (1 5/16" GLAZING)
Ixx	.
Sxx	.
ALLOY	6063-T5

FOR MIAMI-DADE CO. B.C.C.O.

Approved as complying with the Florida Building Code
Date 10/20/2011
NOA# 11-0401.05
Miami Dade Product Control
By

JEFFREY H MARSH
LICENSE
No 70018
STATE OF
FLORIDA
PROFESSIONAL ENGINEER
10/5/2011

TRAINOR GLASS COMPANY
1101 13TH STREET WEST RIVIERA BEACH, FLORIDA 33404
PH. (561) 863-7078 FAX (561) 863-7088
www.trainorglass.com
ILLINOIS FLORIDA GEORGIA NEW JERSEY COLORADO TEXAS ARIZONA VIRGINIA MARYLAND

DESIGN ENGINEERING & CONSULTING Inc.
3906 N. COLLINS BLVD. - SUITE 100 ARLINGTON, TEXAS 76005
PH: 972-544-5940 FAX: 972-544-4234

NO.	DATE	BY

REVISIONS

Date	Scale
3-3-11	HALF

Drawing No 4326439

Drawing Title
130 PSF SMALL MISSILE IMPACT EXTRUSIONS

Sheet No
35 / 41

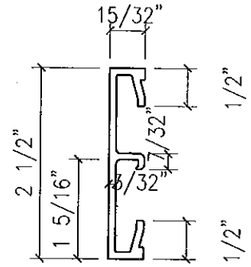

EXTRUSION NO:	TGF-1331
DESCRIPTION:	2 1/2" INT HORIZ. FACE CAP
Ixx	.
Sxx	.
ALLOY	6063-T5

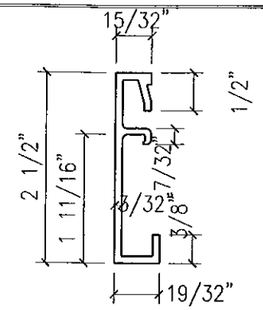

EXTRUSION NO:	TGF-1333
DESCRIPTION:	2 1/2" HEAD FACE CAP
Ixx	.
Sxx	.
ALLOY	6063-T5

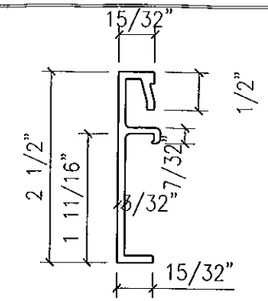

EXTRUSION NO:	TGF-1334
DESCRIPTION:	2 1/2" STACK HORIZ. FACE CAP
Ixx	.
Sxx	.
ALLOY	6063-T5

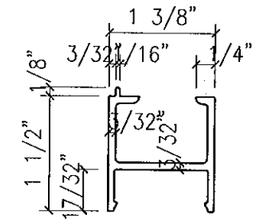

EXTRUSION NO:	TGF-1342
DESCRIPTION:	1 5/16" POCKET FILLER
Ixx	.
Sxx	.
ALLOY	6063-T5

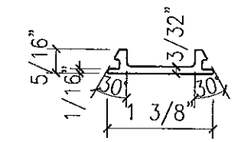

EXTRUSION NO:	TGF-1343
DESCRIPTION:	POCKET FILLER SNAP COVER
Ixx	.
Sxx	.
ALLOY	6063-T5

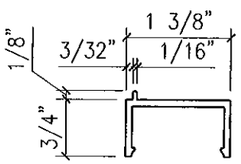

EXTRUSION NO:	TGF-1344
DESCRIPTION:	9/16" POCKET FILLER
Ixx	.
Sxx	.
ALLOY	6063-T5

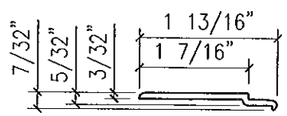

EXTRUSION NO:	TGF-1346
DESCRIPTION:	1 5/16" GLAZING ADAPTER AT STACK GUTTER
Ixx	.
Sxx	.
ALLOY	6063-T5

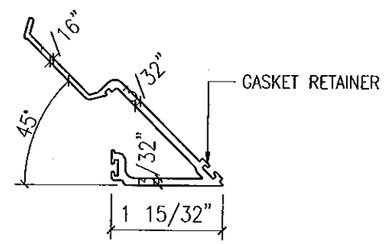

EXTRUSION NO:	TGF-1350
DESCRIPTION:	9/16" GLAZING FIN AT 90° OUTSIDE CORNER
Ixx	.
Sxx	.
ALLOY	6063-T5

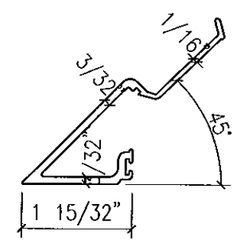

EXTRUSION NO:	TGF-1351
DESCRIPTION:	9/16" GLAZING FIN AT 90° OUTSIDE CORNER
Ixx	.
Sxx	.
ALLOY	6063-T5

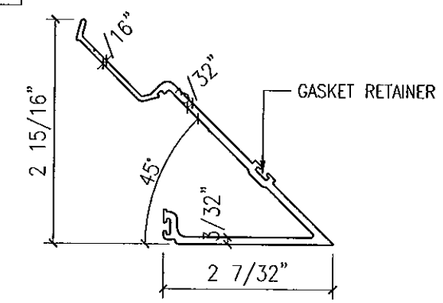

EXTRUSION NO:	TGF-1352
DESCRIPTION:	1 5/16" GLAZING FIN AT 90° OUTSIDE CORNER
Ixx	.
Sxx	.
ALLOY	6063-T5

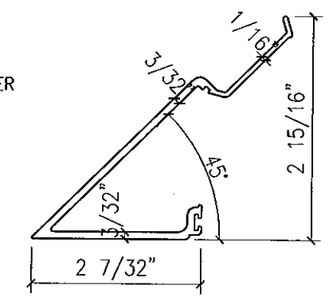

EXTRUSION NO:	TGF-1353
DESCRIPTION:	1 5/16" GLAZING FIN AT 90° OUTSIDE CORNER
Ixx	.
Sxx	.
ALLOY	6063-T5

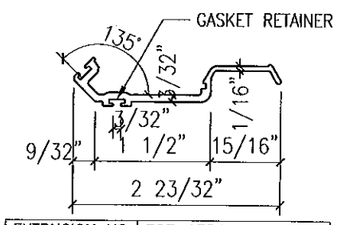

EXTRUSION NO:	TGF-1354
DESCRIPTION:	9/16" GLAZING FIN AT 90° INSIDE CORNER
Ixx	.
Sxx	.
ALLOY	6063-T5

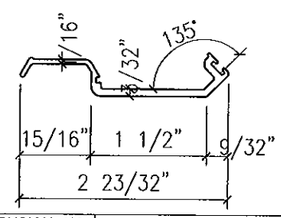

EXTRUSION NO:	TGF-1355
DESCRIPTION:	9/16" GLAZING FIN AT 90° INSIDE CORNER
Ixx	.
Sxx	.
ALLOY	6063-T5

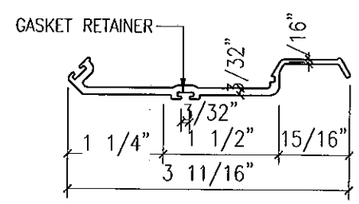

EXTRUSION NO:	TGF-1356
DESCRIPTION:	1 5/16" GLAZING FIN AT 90° INSIDE CORNER
Ixx	.
Sxx	.
ALLOY	6063-T5

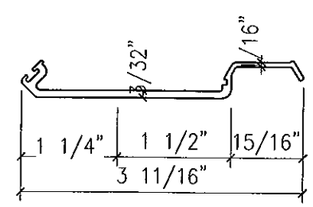

EXTRUSION NO:	TGF-1357
DESCRIPTION:	1 5/16" GLAZING FIN AT 90° INSIDE CORNER
Ixx	.
Sxx	.
ALLOY	6063-T5

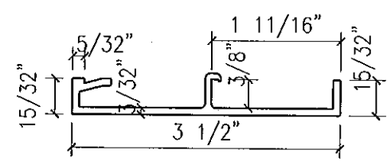

EXTRUSION NO:	TGF-1365
DESCRIPTION:	3 1/2" DL SILL FACE CAP
Ixx	.
Sxx	.
ALLOY	6063-T5

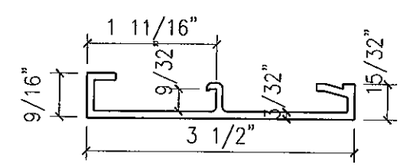

EXTRUSION NO:	TGF-1366
DESCRIPTION:	3 1/2" HEAD FACE CAP
Ixx	.
Sxx	.
ALLOY	6063-T5

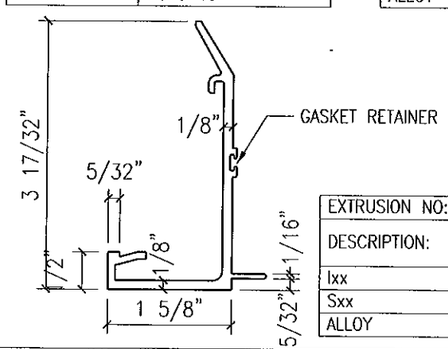

EXTRUSION NO:	TGF-1321
DESCRIPTION:	3 1/2" MALE FACE CAP FOR (1 5/16" GLAZING)
Ixx	.
Sxx	.
ALLOY	6063-T5

EXTRUSION NO:	TGF-1322
DESCRIPTION:	3 1/2" FEMALE FACE CAP FOR (1 5/16" GLAZING)
Ixx	.
Sxx	.
ALLOY	6063-T5

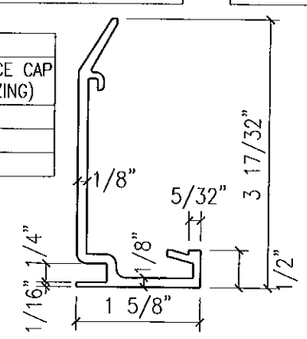

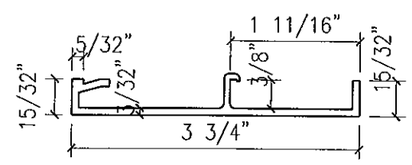

EXTRUSION NO:	TGF-1367
DESCRIPTION:	3 3/4" WL SILL FACE CAP
Ixx	.
Sxx	.
ALLOY	6063-T5

FOR MIAMI-DADE CO. B.C.C.O.

Approved as complying with the Florida Building Code
Date 10/28/2011
NOA# 11-0401.05
Miami Dade Product Control
By

JEFFREY H MARSH
LICENSE
No 70018
STATE OF FLORIDA
PROFESSIONAL ENGINEER
10/5/2011

TRAINOR GLASS COMPANY
1101 13TH STREET WEST RIVIERA BEACH, FLORIDA 33404
PH. (561) 863-7078 FAX (561) 863-7088
www.trainorglass.com
ILLINOIS FLORIDA GEORGIA NEW JERSEY COLORADO TEXAS ARIZONA VIRGINIA MARYLAND

REVISIONS

NO.	DATE	BY

DESIGN ENGINEERING & CONSULTING Inc.
2905 N. COLLINS BLVD. - SUITE 190 RICHARDSON, TEXAS 75080
PH. 972-644-5640 FAX 972-644-4204

Date	Scale
3-3-11	HALF

Drawing No
4326439

Drawing Title
130 PSF
SMALL MISSILE IMPACT EXTRUSIONS

Sheet No
36 / 41

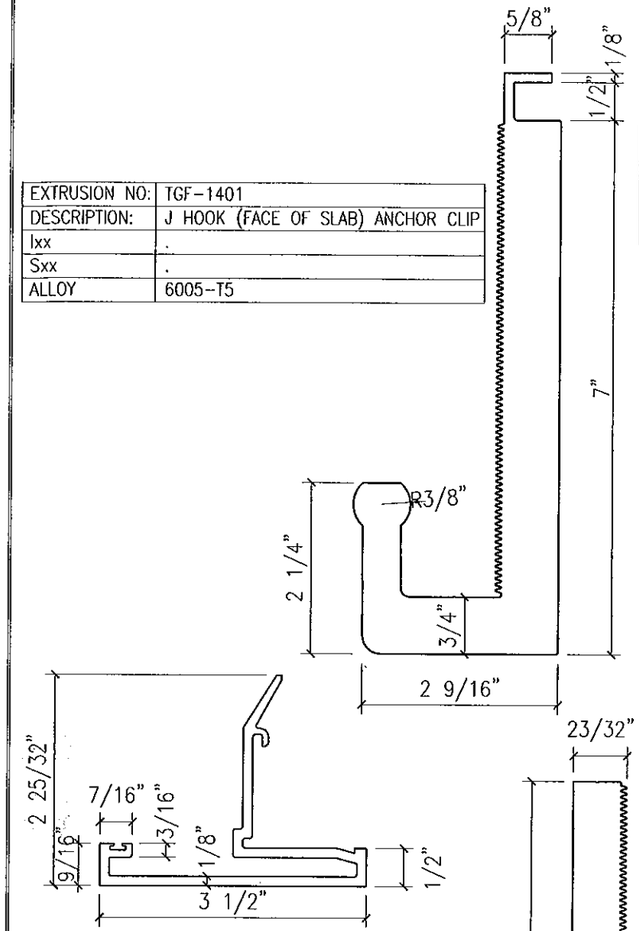

EXTRUSION NO:	TGF-1401
DESCRIPTION:	J HOOK (FACE OF SLAB) ANCHOR CLIP
Ixx	.
Sxx	.
ALLOY	6005-T5

EXTRUSION NO:	TGF-1363
DESCRIPTION:	3 1/2" JAMB FACE CAP FOR (9/16" GLAZING)
Ixx	.
Sxx	.
ALLOY	6063-T5

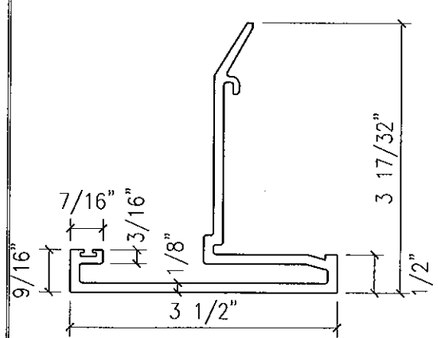

EXTRUSION NO:	TGF-1364
DESCRIPTION:	3 1/2" JAMB FACE CAP FOR (1 5/16" GLAZING)
Ixx	.
Sxx	.
ALLOY	6063-T5

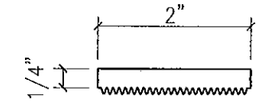

EXTRUSION NO:	TGF-1402
DESCRIPTION:	SERRATED WASHER
Ixx	.
Sxx	.
ALLOY	6005-T5

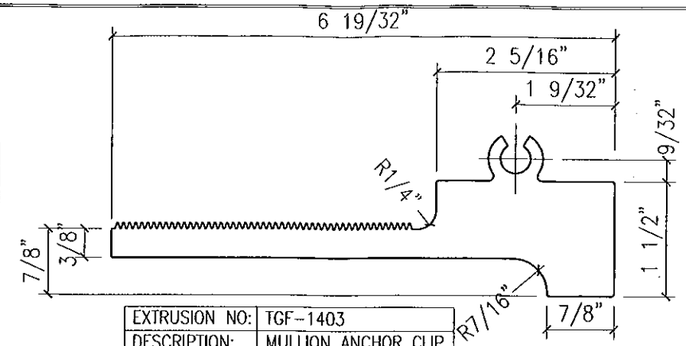

EXTRUSION NO:	TGF-1403
DESCRIPTION:	MULLION ANCHOR CLIP
Ixx	.
Sxx	.
ALLOY	6005-T5

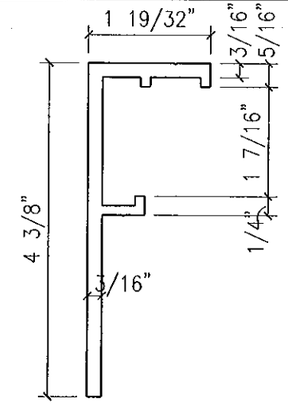

EXTRUSION NO:	TGF-1404
DESCRIPTION:	ANTI-WALK / ANTI-LIFT
Ixx	.
Sxx	.
ALLOY	6005-T5

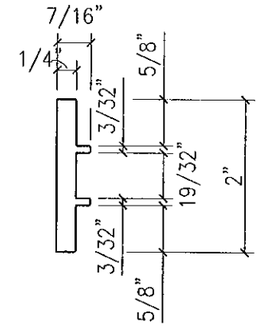

EXTRUSION NO:	TGF-1405
DESCRIPTION:	MULLION ANCHOR BAR / LIFTING LUG
Ixx	.
Sxx	.
ALLOY	6005-T5

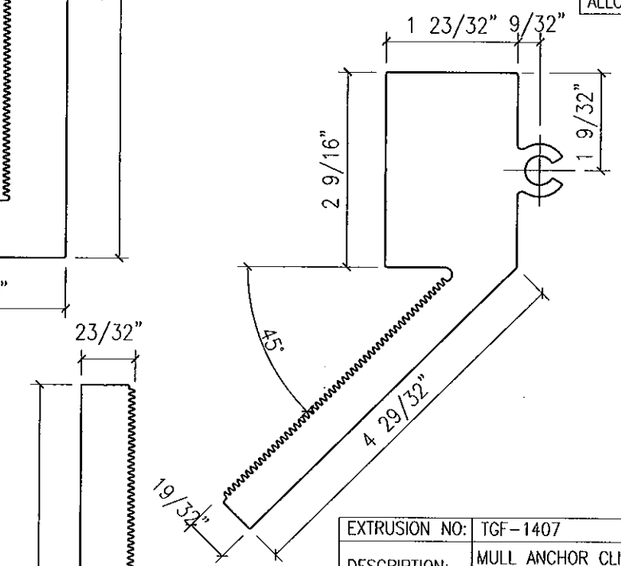

EXTRUSION NO:	TGF-1407
DESCRIPTION:	MULL ANCHOR CLIP AT 90° INSIDE CORNER
Ixx	.
Sxx	.
ALLOY	6005-T5

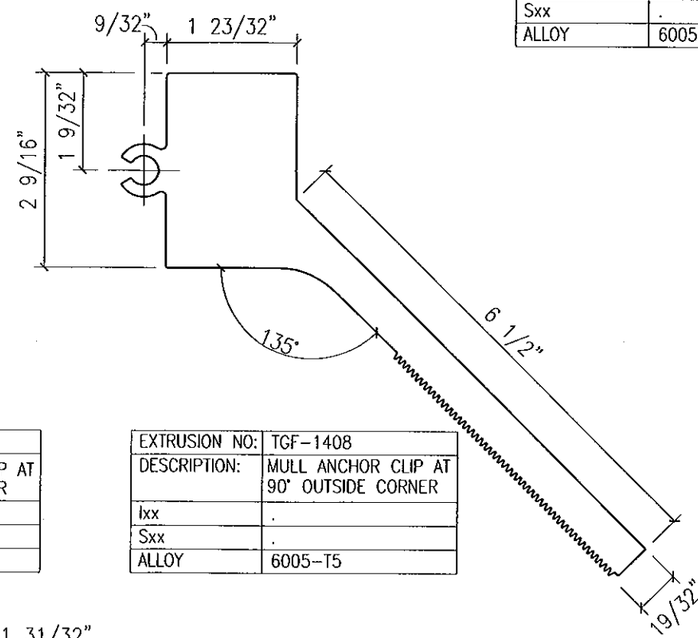

EXTRUSION NO:	TGF-1408
DESCRIPTION:	MULL ANCHOR CLIP AT 90° OUTSIDE CORNER
Ixx	.
Sxx	.
ALLOY	6005-T5

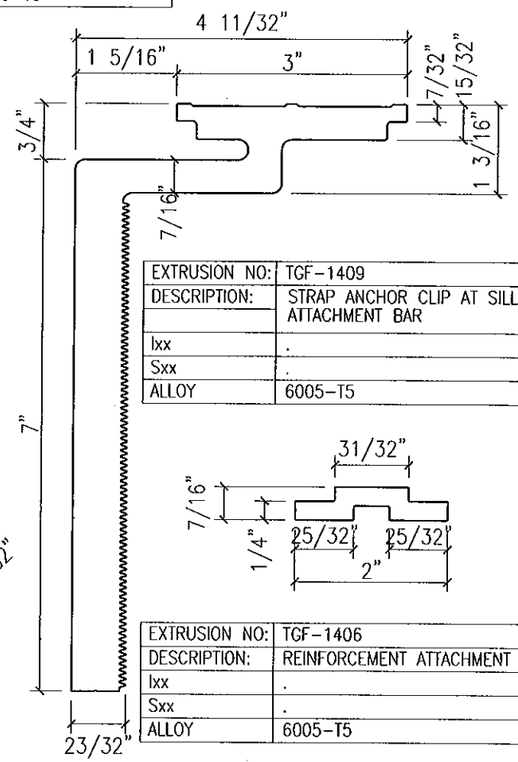

EXTRUSION NO:	TGF-1409
DESCRIPTION:	STRAP ANCHOR CLIP AT SILL ATTACHMENT BAR
Ixx	.
Sxx	.
ALLOY	6005-T5

EXTRUSION NO:	TGF-1406
DESCRIPTION:	REINFORCEMENT ATTACHMENT BAR
Ixx	.
Sxx	.
ALLOY	6005-T5

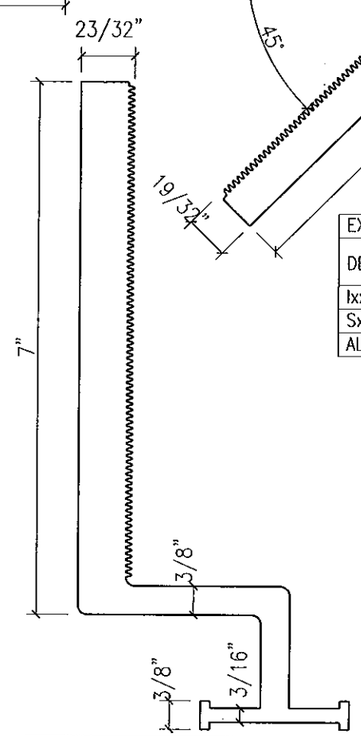

EXTRUSION NO:	TGF-1410
DESCRIPTION:	STRAP ANCHOR CLIP AT HEAD ATTACHMENT BAR
Ixx	.
Sxx	.
ALLOY	6005-T5

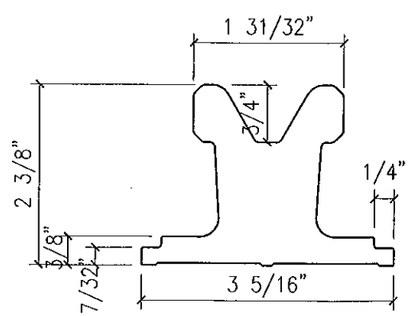

EXTRUSION NO:	TGF-1411
DESCRIPTION:	SILL ANCHOR MULLION LUG
Ixx	.
Sxx	.
ALLOY	6005-T5

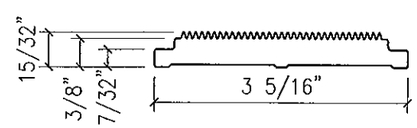

EXTRUSION NO:	TGF-1412
DESCRIPTION:	SILL STARTER REINFORCING AT ANCHOR PLATE
Ixx	.
Sxx	.
ALLOY	6005-T5

FOR MIAMI-DADE CO. B.C.C.O.

Approved as complying with the Florida Building Code
Date 10/20/2011
NOA# 11-0401.05
Miami Dade Product Control
By

JEFFREY H MARSH
LICENSE
No 70018
STATE OF
FLORIDA
PROFESSIONAL ENGINEER
10/5/2011

GLASS COMPANY
1101 13TH STREET WEST RIVIERA BEACH, FLORIDA 33404
PH. (561) 863-7078 FAX (561) 863-7088
www.trainorglass.com
TRAINOR
ILLINOIS FLORIDA GEORGIA NEW JERSEY COLORADO TEXAS ARIZONA VIRGINIA MARYLAND

REVISIONS

NO.	DATE	BY
1	.	.
2	.	.
3	.	.
4	.	.
5	.	.
6	.	.

DESIGN ENGINEERING & CONSULTING Inc.
3905 N. CALLOWS BLVD., SUITE 100
GRANDVIEW, TEXAS 76050
TEL: 972-444-0040
FAX: 972-444-0034

Date	Scale
3-3-11	HALF

Drawing No
4326439

Drawing Title
130 PSF SMALL MISSILE IMPACT EXTRUSIONS

Sheet No
37 / 41

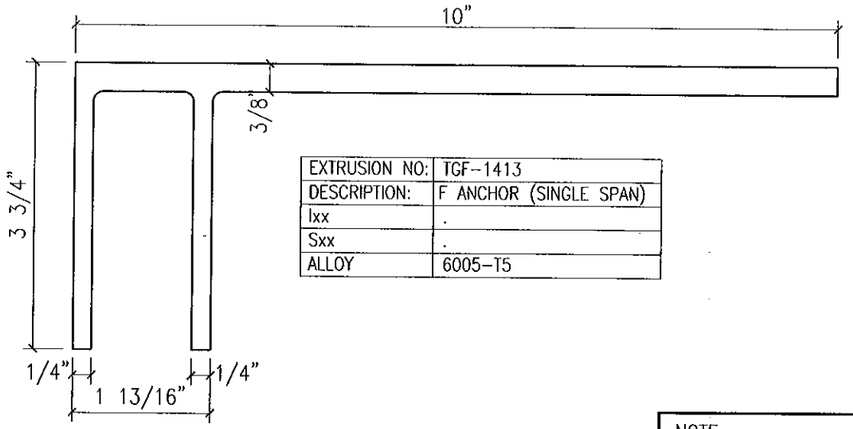

EXTRUSION NO:	TGF-1413
DESCRIPTION:	F ANCHOR (SINGLE SPAN)
Ixx	.
Sxx	.
ALLOY	6005-T5

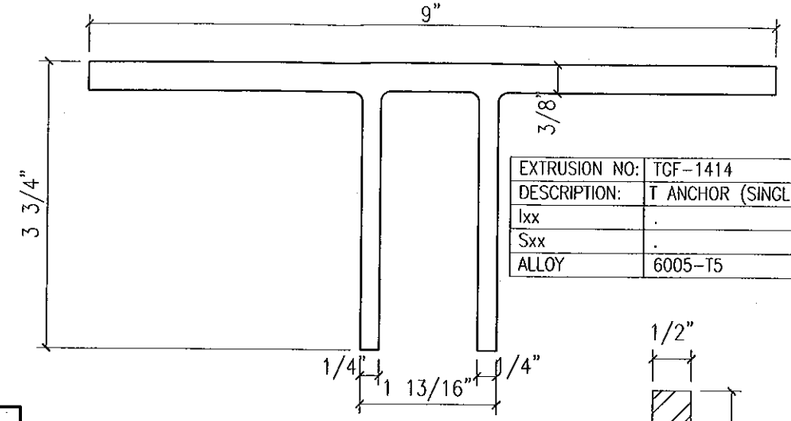

EXTRUSION NO:	TGF-1414
DESCRIPTION:	T ANCHOR (SINGLE SPAN)
Ixx	.
Sxx	.
ALLOY	6005-T5

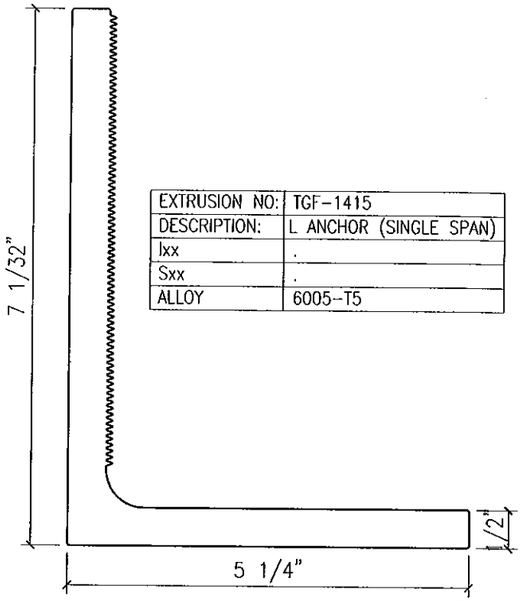

EXTRUSION NO:	TGF-1415
DESCRIPTION:	L ANCHOR (SINGLE SPAN)
Ixx	.
Sxx	.
ALLOY	6005-T5

NOTE:
STEEL IN CONTACT WITH ALUMINUM MUST BE COATED w/ RED OXIDE PRIMER

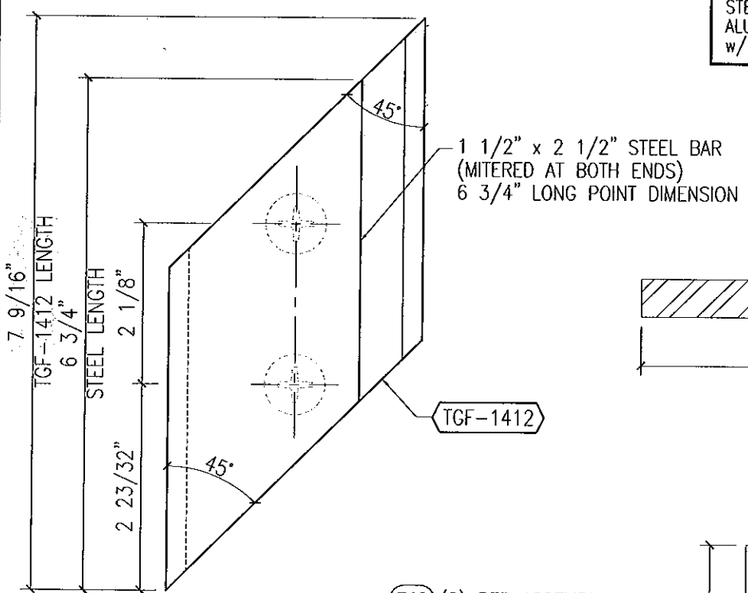

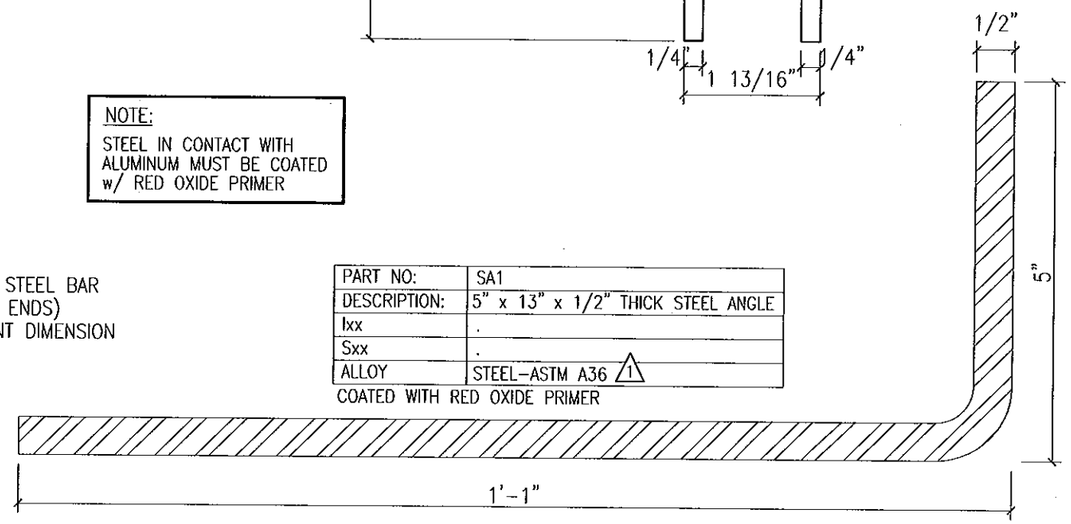

PART NO:	SA1
DESCRIPTION:	5" x 13" x 1/2" THICK STEEL ANGLE
Ixx	.
Sxx	.
ALLOY	STEEL-ASTM A36 (1)

COATED WITH RED OXIDE PRIMER

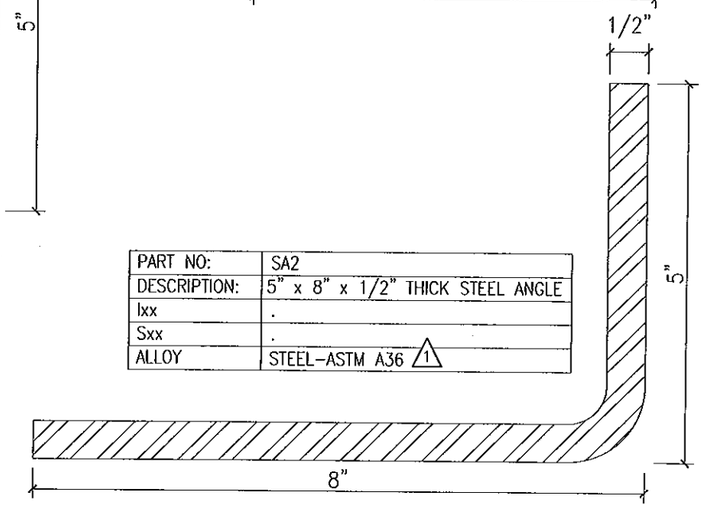

PART NO:	SA2
DESCRIPTION:	5" x 8" x 1/2" THICK STEEL ANGLE
Ixx	.
Sxx	.
ALLOY	STEEL-ASTM A36 (1)

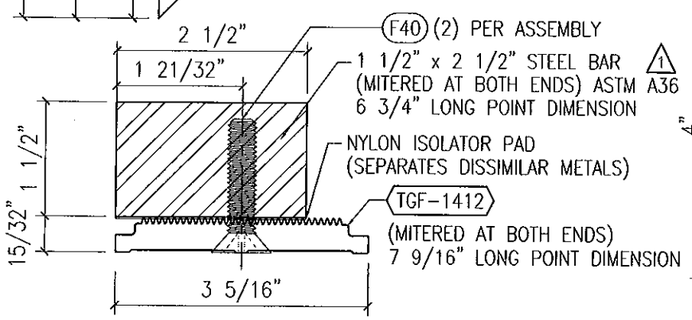

CORNER ANCHOR CLIP ASSEMBLY (HEAD/SILL)	
EXTRUSION NO:	TGF-1412 DOUBLE-MITERED
DESCRIPTION:	SILL STARTER REINFORCING ANCHOR PLATE FASTENED TO 1 1/2" x 2 1/2" STEEL BAR w/ (2) 3/8" x 1 1/2" FH MACHINE SCREWS
Ixx	.
Sxx	.
ALLOY	6005-T5 (TGF-1412 ONLY)

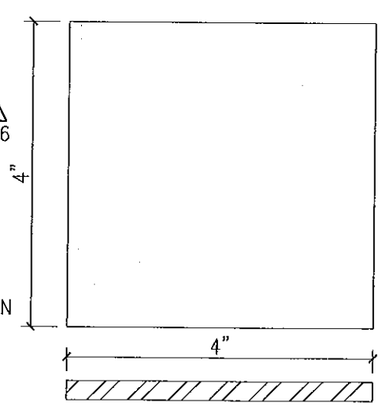

PART NO:	SP1
DESCRIPTION:	4" x 4" x 1/4" STEEL PLATE
Ixx	.
Sxx	.
ALLOY	STEEL-ASTM A36 (1)

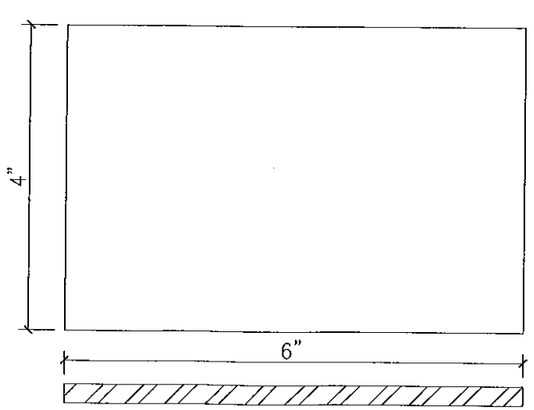

PART NO:	SP2
DESCRIPTION:	4" x 6" x 1/4" STEEL PLATE
Ixx	.
Sxx	.
ALLOY	STEEL-ASTM A36 (1)

FOR MIAMI-DADE CO. B.C.C.O.

Approved as complying with the Florida Building Code
Date 10/20/2011
NOA# 11-0401.06
Miami Dade Product Control
By

JEFFREY H MARSH
LICENSE
No 70018
STATE OF
FLORIDA
PROFESSIONAL ENGINEER
10/5/2011

GLASS COMPANY
1101 13TH STREET WEST RIVIERA BEACH, FLORIDA 33404
PH. (561) 863-7078 FAX (561) 863-7088
www.trainorglass.com
TRAINOR
ILLINOIS FLORIDA GEORGIA NEW JERSEY COLORADO TEXAS ARIZONA VIRGINIA MARYLAND

REVISIONS

NO.	DATE	BY	DESC.
1	9/28/11		REVISED STEEL CALLOUT
2			
3			
4			
5			
6			

DESIGN ENGINEERING & CONSULTING Inc

Date	Scale
3-3-11	HALF

Drawing No
4326439

Drawing Title
130 PSF
SMALL MISSILE IMPACT
EXTRUSIONS

Sheet No
38 / 41

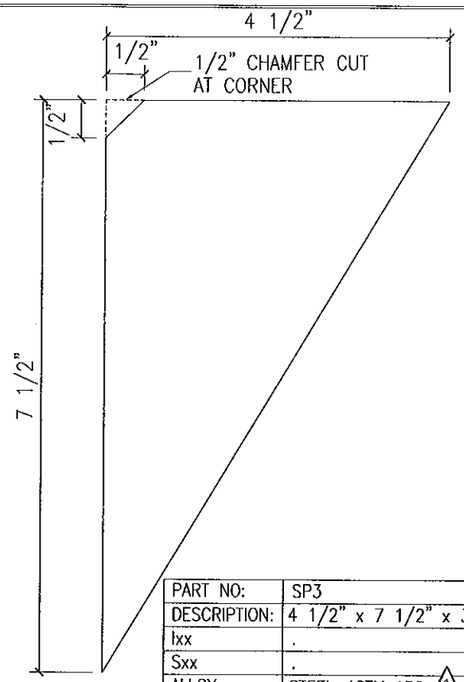

PART NO:	SP3
DESCRIPTION:	4 1/2" x 7 1/2" x 3/8" GUSSET PLATE
Ixx	.
Sxx	.
ALLOY	STEEL-ASTM A36 (1)

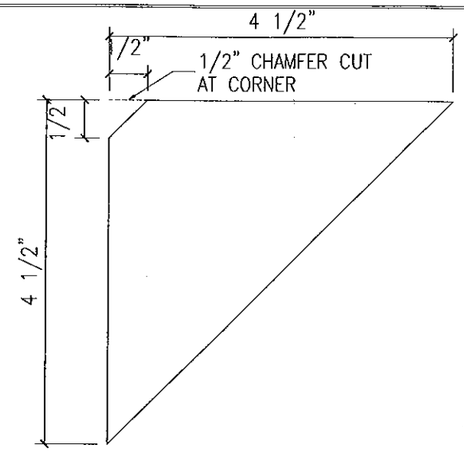

PART NO:	SP4
DESCRIPTION:	4 1/2" x 4 1/2" x 3/8" GUSSET PLATE
Ixx	.
Sxx	.
ALLOY	STEEL-ASTM A36 (1)

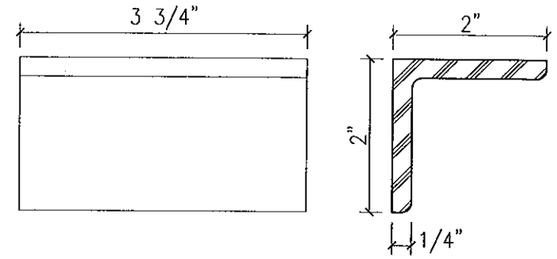

EXTRUSION NO:	AA1
DESCRIPTION:	2" x 2" x 1/4" THICK ALUM ANGLE
Ixx	.
Sxx	.
ALLOY	6061-T6

NOTE:
STEEL IN CONTACT WITH ALUMINUM MUST BE COATED w/ RED OXIDE PRIMER

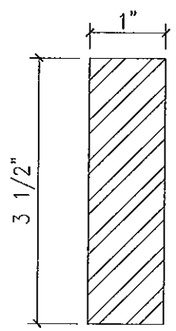

PART NO:	SB-1
DESCRIPTION:	3 1/2" x 1" STEEL REINF. BAR
Ixx	.
Sxx	.
ALLOY	STEEL-ASTM A36 (1)

COATED WITH RED OXIDE PRIMER

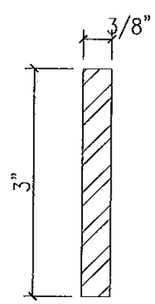

PART NO:	SB-2
DESCRIPTION:	3" x 3/8" STEEL REINF. BAR
Ixx	.
Sxx	.
ALLOY	STEEL-ASTM A36 (1)

COATED WITH RED OXIDE PRIMER

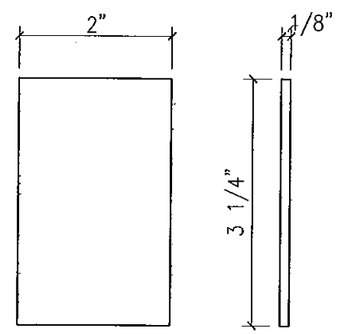

EXTRUSION NO:	AP1
DESCRIPTION:	1/8" x 3 1/4" END DAM PLATE
Ixx	.
Sxx	.
ALLOY	3003-H14

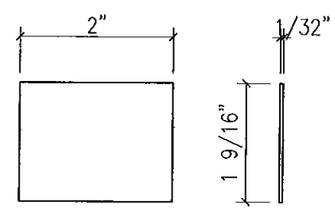

EXTRUSION NO:	AP2
DESCRIPTION:	.040" x 1 9/16" ALUM WATER DIVERTER (2" LONG) AT 1 5/16" GLASS
Ixx	.
Sxx	.
ALLOY	3003-H14

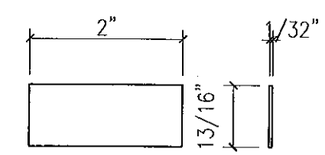

EXTRUSION NO:	AP3
DESCRIPTION:	.040" x 13/16" ALUMINUM WATER DIVERTER (2" LONG) AT 9/16" GLASS
Ixx	.
Sxx	.
ALLOY	3003-H14

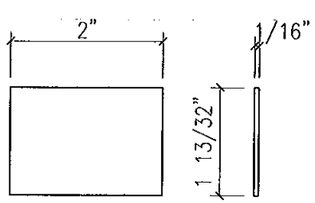

EXTRUSION NO:	AP4
DESCRIPTION:	1/16" x 1 13/32" ALUMINUM PLATE (2" LONG) AT HORIZ'L STACK JOINT
Ixx	.
Sxx	.
ALLOY	3003-H14

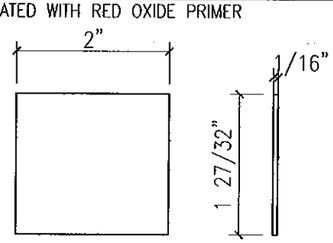

EXTRUSION NO:	AP5
DESCRIPTION:	1/16" x 1 27/32" ALUMINUM PLATE (2" LONG) AT STARTER SILL SPLICE
Ixx	.
Sxx	.
ALLOY	3003-H14

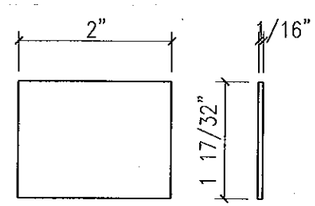

EXTRUSION NO:	AP6
DESCRIPTION:	1/16" x 1 17/32" ALUMINUM PLATE (2" LONG) AT STARTER SILL SPLICE
Ixx	.
Sxx	.
ALLOY	3003-H14

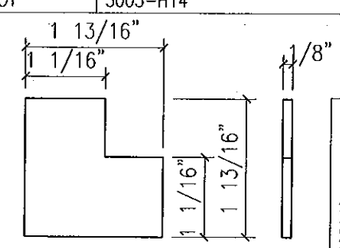

EXTRUSION NO:	AP7
DESCRIPTION:	1/8" THICK ALUM CORNER PLATE
Ixx	.
Sxx	.
ALLOY	3003-H14

FOR MIAMI-DADE CO. B.C.C.O.

Approved as complying with the Florida Building Code
Date 10/20/2011
NOA# 11-0401.05
Miami Dade Product Control
By

JEFFREY H MARSH
LICENSE
No 70018
STATE OF FLORIDA
PROFESSIONAL ENGINEER
10/5/2011

TRAINOR GLASS COMPANY
1101 13TH STREET WEST RIVIERA BEACH, FLORIDA 33404
PH. (561) 863-7078 FAX (561) 863-7088
www.trainorglass.com
ILLINOIS FLORIDA GEORGIA NEW JERSEY COLORADO TEXAS ARIZONA VIRGINIA MARYLAND

REVISIONS

NO.	DATE	BY	DESC.
1	9/26/11		REVISED STEEL GAUGE
2			
3			
4			
5			
6			

DESIGN ENGINEERING & CONSULTING Inc.
2803 N. GALLOWS ROAD - SUITE 100 DENBOROUGH, TEXAS 75065
PH. 972-644-5664 FAX 972-644-4224

Date 3-3-11	Scale HALF
Drawing No 4326439	
Drawing Title 130 PSF SMALL MISSILE IMPACT EXTRUSIONS	
Sheet No 39 / 41	

NOTE:
ALL CAPTURED RE-GLAZE OPTIONS ARE NOT SUBJECT TO SILICONE STRESS

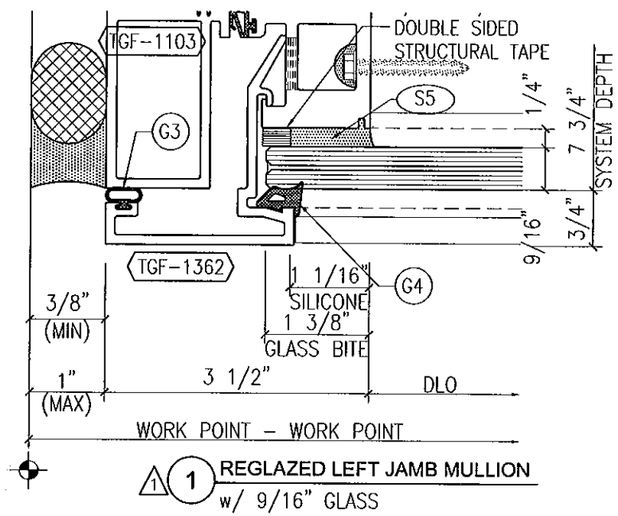

1 REGLAZED LEFT JAMB MULLION
w/ 9/16" GLASS

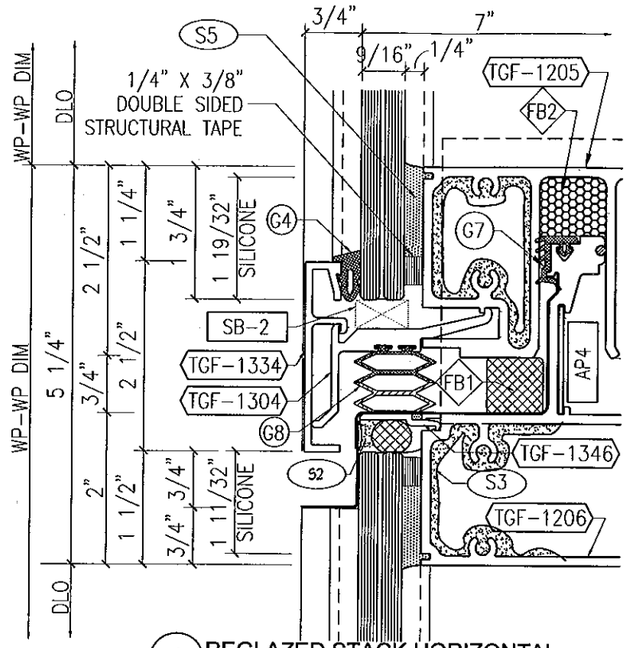

1 REGLAZED STACK HORIZONTAL
w/ 9/16" GLAZING

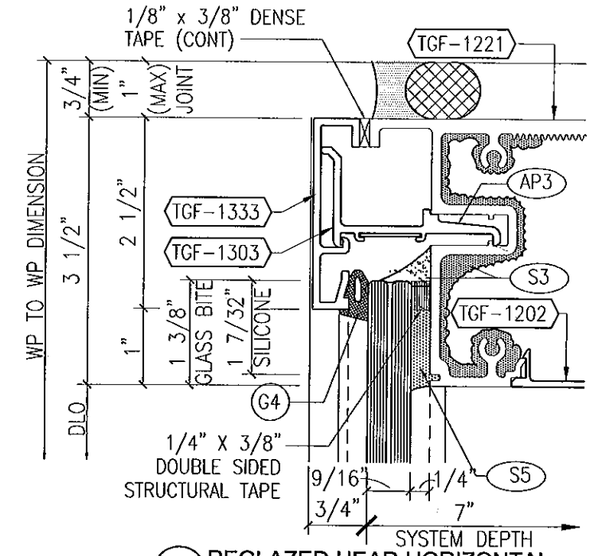

1 REGLAZED HEAD HORIZONTAL
w/ 9/16" THICK GLASS

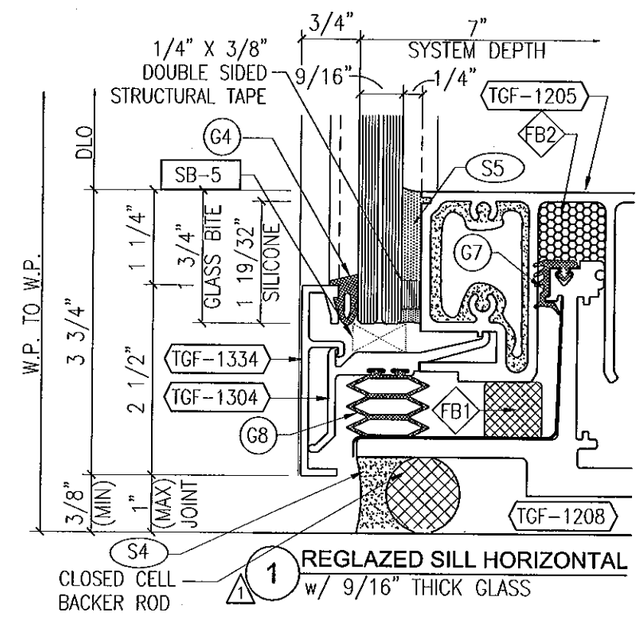

1 REGLAZED SILL HORIZONTAL
w/ 9/16" THICK GLASS

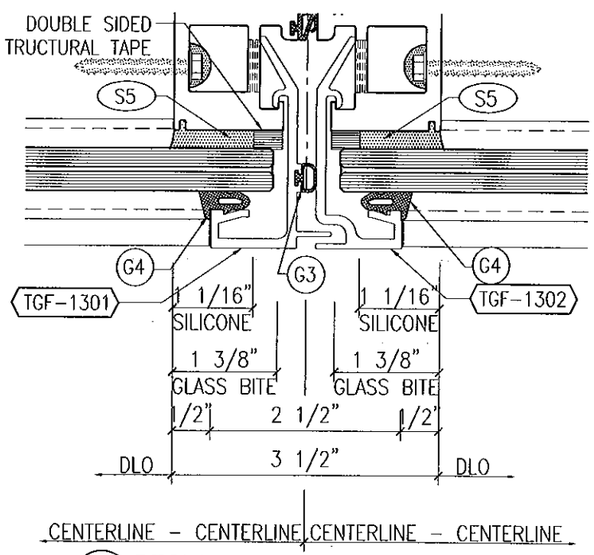

1 REGLAZED INTERMEDIATE MULLION
w/ 9/16" THICK GLASS & 2 1/2" FACE CAP

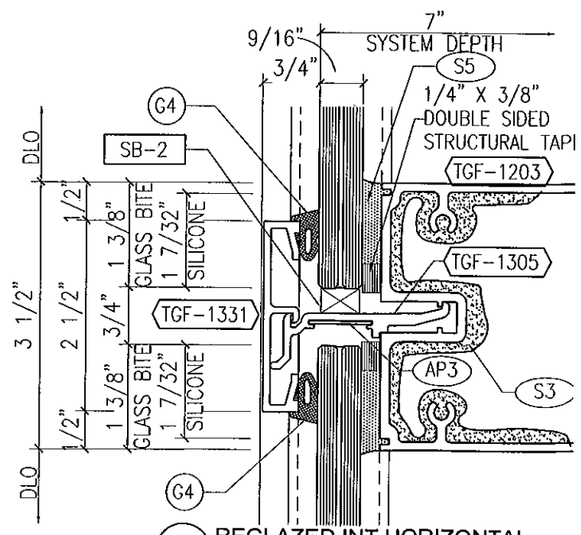

1 REGLAZED INT HORIZONTAL
w/ 9/16" GLASS

FOR MIAMI-DADE CO. B.C.C.O.

Approved as complying with the Florida Building Code
Date 10/20/2011
NOA# 11-0401.05
Miami Dade Product Control
By

JEFFREY H MARSH
LICENSE
No 70018
STATE OF
FLORIDA
PROFESSIONAL ENGINEER
10/15/2011

GLASS COMPANY
1101 13TH STREET WEST RIVIERA BEACH, FLORIDA 33404
PH. (561) 863-7078 FAX (561) 863-7088
www.trainorglass.com
TRAINOR
ILLINOIS FLORIDA GEORGIA NEW JERSEY COLORADO TEXAS ARIZONA VIRGINIA MARYLAND

REVISIONS

NO.	DATE	BY	
1	10/05/11	BBC	ADDED REGLAZE TO VERIFY SILICONE STRESS
2			
3			
4			
5			
6			

DESIGN ENGINEERING & CONSULTING Inc.
PH: 972-644-5440
FAX: 972-644-4264
206 N. GULDEN BLVD. - SUITE 100
DESOTO, TEXAS 75115

Date	Scale
3-3-11	HALF

Drawing No
4326439

Drawing Title
I.30 PSF
SMALL MISSILE IMPACT
REGLAZE DETAILS

Sheet No
40 / 41

1 7/16" SILICONE BOND WIDTH CHART												
WINDLOAD 130 PSF	(SMALLEST LEG OF LARGEST LITE OF GLASS) – INCHES											
	24	30	36	42	48	52	54	56.5	60	66	72	76
	OK	OK	OK	OK	OK	OK	OK	OK	OK	FAIL	FAIL	FAIL

A: 1 7/16" SILICONE BOND WIDTH IS ACCEPTABLE FOR I.S AND O.S. CORNER MULLIONS ONLY

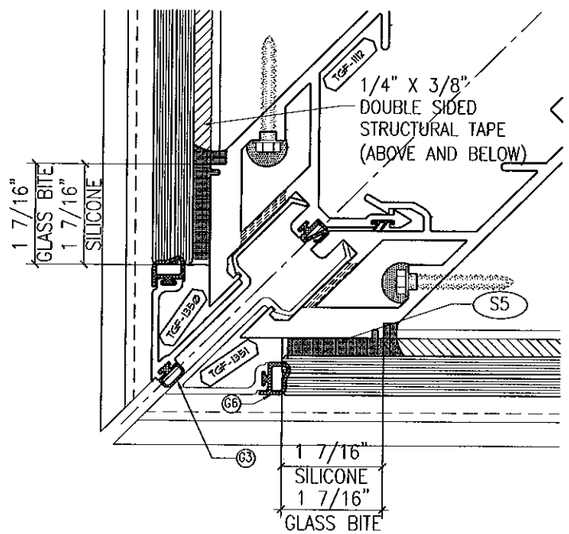

1 REGLAZED SSG OS CORNER MULLION
w/ 1 5/16" OR 9/16" THICK GLASS OR COMPOSITE PANEL

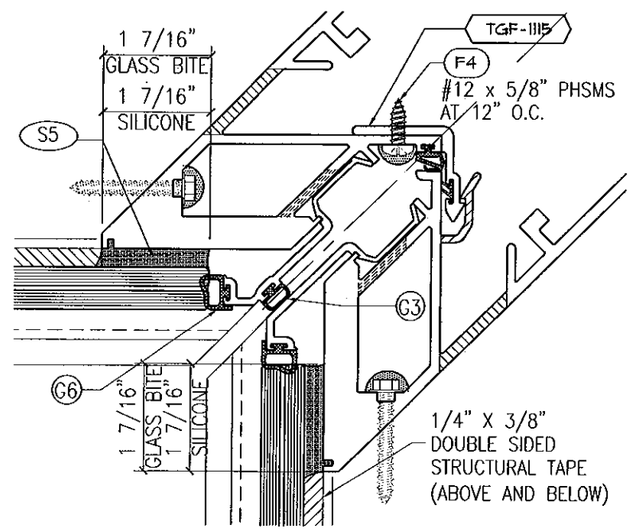

2 REGLAZED SSG IS CORNER MULLION
w/ 1 5/16" OR 9/16" THICK GLASS OR COMPOSITE PANEL

FOR MIAMI-DADE CO. B.C.C.O.

Approved as complying with the Florida Building Code
Date 10/20/2011
NOA# 11-0401.05
Miami Dade Product Control
By

JEFFREY H MARSH
LICENSE
No 70018
STATE OF FLORIDA
PROFESSIONAL ENGINEER
10/5/2011

TRAINOR GLASS COMPANY
1101 13TH STREET WEST RIVIERA BEACH, FLORIDA 33404
PH. (561) 863-7078 FAX (561) 863-7088
www.trainorglass.com
ILLINOIS FLORIDA GEORGIA NEW JERSEY COLORADO TEXAS ARIZONA VIRGINIA MARYLAND

REVISIONS

NO.	DATE	BY
1	-	-
2	-	-
3	-	-
4	-	-
5	-	-
6	-	-

DESIGN ENGINEERING & CONSULTING
2205 N. COLLINS BLVD. • SUITE 100 PH: 972-644-3640
RICHARDSON, TEXAS 75080 FAX: 972-644-4324

Date	Scale
3-3-11	HALF

Drawing No
4326439

Drawing Title
130 PSF
SMALL MISSILE IMPACT
REGLAZE DETAILS

Sheet No
41 / 41