MIAMI-DADE COUNTY
DEPARTMENT OF PERMITTING, ENVIRONMENT, AND REGULATORY AFFAIRS (PERA)
BOARD AND CODE ADMINISTRATION DIVISION

MIAMI–DADE COUNTY
PRODUCT CONTROL SECTION
11805 SW 26 Street, Room 208
Miami, Florida 33175–2474
T (786) 315–2590 F (786) 315–2599
www.miamidade.gov/pera/

NOTICE OF ACCEPTANCE (NOA)

Trainor Glass Company
1101 W. 13th Street West
Riviera Beach, FL 33404

SCOPE:

This NOA is being issued under the applicable rules and regulations governing the use of construction materials. The documentation submitted has been reviewed and accepted by Miami–Dade County PERA–Product Control Section to be used in Miami–Dade County and other areas where allowed by the Authority Having Jurisdiction (AHJ).

This NOA shall not be valid after the expiration date stated below. The Miami–Dade County Product Control Section (In Miami–Dade County) and/or the AHJ (in areas other than Miami–Dade County) reserve the right to have this product or material tested for quality assurance purposes. If this product or material fails to perform in the accepted manner, the manufacturer will incur the expense of such testing and the AHJ may immediately revoke, modify, or suspend the use of such product or material within their jurisdiction. PERA reserves the right to revoke this acceptance, if it is determined by Miami–Dade County Product Control Section that this product or material fails to meet the requirements of the applicable building code.

This product is approved as described herein, and has been designed to comply with the Florida Building Code, including the High Velocity Hurricane Zone.

DESCRIPTION: Series "T850 ICW 113 PSF" Aluminum Curtain Wall System – L.M.I.

APPROVAL DOCUMENT: Drawing No. **4326438**, titled "Series T850 ICW System Single & Multiple Span 113 PSF Large Missile Impact", sheets 1 through 44 of 44, dated 03/03/2011 with revision "**2**" dated 10/04/2011, prepared by Design Engineering & Consulting, Inc., signed and sealed by Jeffery H. Marsh, P. E., bearing the Miami–Dade County Product Control Approval stamp with the Notice of Acceptance number and Approval date by the Miami–Dade County Product Control Section.

MISSILE IMPACT RATING: Large and Small Missile Impact Resistant.

LABELING: Each unit shall bear a permanent label with the manufacturer's name or logo, city, state, model/series and following statement: "Miami–Dade County Product Control Approved" unless otherwise noted herein.

RENEWAL of this NOA shall be considered after a renewal application has been filed and there has been no change in the applicable building code negatively affecting the performance of this product.

TERMINATION of this NOA will occur after the expiration date or if there has been a revision or change in the materials, use, and/or manufacture of the product or process. Misuse of this NOA as an endorsement of any product, for sales, advertising or any other purposes shall automatically terminate this NOA. Failure to comply with any section of this NOA shall be cause for termination and removal of NOA.

ADVERTISEMENT: The NOA number preceded by the words Miami–Dade County, Florida, and followed by the expiration date may be displayed in advertising literature. If any portion of the NOA is displayed, then it shall be done in its entirety.

INSPECTION: A copy of this entire NOA shall be provided to the user by the manufacturer or its distributors and shall be available for inspection at the job site at the request of the Building Official.

This NOA consists of this page 1 and evidence pages E–1 and E–2, as well as approval document mentioned above.

The submitted documentation was reviewed by **Jaime D. Gascon, P. E.**

MIAMI-DADE COUNTY APPROVED

J. Gascon
10/14/11

A. DRAWINGS

1. Manufacturer's die drawings and sections.
2. Drawing No. **4326438**, titled "Series T850 ICW System Single & Multiple Span 113 PSF Large Missile Impact", sheets 1 through 44 of 44, dated 03/03/2011 with revision "**2**" dated 10/04/2011, prepared by Design Engineering & Consulting, Inc., signed and sealed by Jeffery H. Marsh, P. E.

B. TESTS

1. Test reports on: 1) Air Infiltration Test, per FBC, TAS 202–94
   2) Uniform Static Air Pressure Test, Loading per FBC TAS 202–94
   3) Water Resistance Test, per FBC, TAS 202–94
   4) Dynamic Water Infiltration Test, per FBC and per AAMA 501.1–05
   5) Interstory Displacement Test, per FBC and per AAMA 501.4–00
   6) Large Missile Impact Test per FBC, TAS 201–94, Level D per ASTM E 1996–08
   7) Thermal Cycling Test, per FBC and per AAMA 501.5–07
   8) Cyclic Wind Pressure Loading per FBC, TAS 203–94

   along with marked–up drawings and installation diagram of curtain wall system, prepared by Hurricane Test Laboratory, LLC, Test Reports No.'s **HTL 0062–0307–10** and **HTL 0062–0909–10**, dated 05/18/2010 and 03/24/2011, all signed and sealed by Vinu J. Abraham, P. E.

C. CALCULATIONS

1. Anchor calculations and structural analysis, complying with FBC–2007, prepared by Design Engineering & Consulting, Inc., dated 11/18/2010, signed, sealed and dated 10/04/2011 by Jeffery H. Marsh, P. E.
   Complies with ASTM E1300–04

QUALITY ASSURANCE

1. Miami–Dade Department of Permitting, Environment, and Regulatory Affairs (PERA).

MATERIAL CERTIFICATIONS

1. Notice of Acceptance No. **11–0624.02** issued to E.I. DuPont DeNemours & Co., Inc. for their "**DuPont Sentry Glass® Interlayer**" dated 05/26/2010, expiring on 01/14/12.
2. Notice of Acceptance No. **08–0206.01** issued to Solutia Inc. for their "**Saflex HP Glass Interlayer**" dated 04/17/2008, expiring on 04/17/2013.
3. Notice of Acceptance No. **08–1224.08** issued to Solutia Inc. for their "**Saflex Composites Glass Interlayer with PET Core**" dated 02/25/2009, expiring on 12/11/13.

Jaime D. Gascon, P. E.
Product Control Section Supervisor
NOA No. 11–0401.06
Expiration Date: October 20, 2016
Approval Date: October 20, 2011

STATEMENTS

1. Statement letter of compliance with the FBC–2007 and FBC–2010, dated 10/04/2011, signed and sealed by Jeffery H. Marsh, P. E.
2. Statement letter of no financial interest, conformance and compliance with the FBC–2007, dated 11/18/2010, signed and sealed by Jeffery H. Marsh, P. E.
3. Laboratory compliance letters for Test Reports No.'s **HTL 0062–0307–10** and **HTL 0062–0909–10**, issued by Hurricane Test Laboratory, LLC, dated 05/18/2010 and 03/24/2011, all signed and sealed by Vinu J. Abraham, P. E.

OTHERS

1. None.

Jaime D. Gascon, P. E.
Product Control Section Supervisor
NOA No. 11–0401.06
Expiration Date: October 20, 2016
Approval Date: October 20, 2011

TRAINOR GLASS - T850 ICW SYSTEM
SINGLE & MULTIPLE SPAN
113 PSF LARGE MISSILE IMPACT

GLAZING GASKETS AND TAPES

PART NO.	PROFILE	DESCRIPTION	MANUFACTURER NO.	MATERIAL	DUROMETER	COLOR	FURNISHED BY
G-1		PRESET WIPER GASKET	TX-18034E	EPDM	70±5	BLACK	TRAINOR/ TREMCO
G-2		PRESET AIR SEAL BULB GASKET	TX-17992E	EPDM	70±5	BLACK	TRAINOR/ TREMCO
G-3		PRESET RAINSCREEN GASKET	TX-15075E	EPDM	70±5	BLACK	TRAINOR/ TREMCO
G-4		WEDGE GASKET	TR-6329E	EPDM	70±5	BLACK	TRAINOR/ TREMCO
G-5		PRESET GASKET	TR-5796W	SCR-900	70±5	BLACK	TRAINOR/ TREMCO
G-6		PRESET GLASS EDGE BULB GASKET	TX-17989E	EPDM	70±5	BLACK	TRAINOR/ TREMCO
G-7		PRESET AIR SEAL WIPER GASKET	TX-17979E	EPDM	70±5	BLACK	TRAINOR/ TREMCO
G-8		ACCORDIAN RAINSCREEN GASKET	TX-17980P/S	PEROX. EPDM SILICONE	60±5	BLACK	TRAINOR/ TREMCO
		0.062" X 6" EXTRUDED SILICONE SHEET	TR4949S	SILICONE	N/A 2	TRANS-LUCENT	TRAINOR/ TREMCO
FB-1		EXTRUDED CLOSED CELL FOAM BAFFLE 6" LONG	TR16132E	EPDM	N/A 2	BLACK	TRAINOR/ TREMCO
FB-2		EXTRUDED CLOSED CELL FOAM BAFFLE 6" LONG	TR16133E	EPDM	N/A 2	BLACK	TRAINOR/ TREMCO

SETTING BLOCKS

PART NO.	PROFILE	DESCRIPTION	MANUFACTURER NO.	MATERIAL	DUROMETER
SB-1		5/16" X 1 1/4" X 4"	TR-1731S	SILICONE	85±5
SB-2		5/16" X 1/2" X 4"	TR-1058S	SILICONE	85±5
SB-3		1/4" X 1 3/8" X 4"	TR-1064S	SILICONE	85±5
SB-4		3/8" X 1 1/4" X 4"	TR-5043S	SILICONE	85±5
SB-5		3/8" X 11/16" X 4"	TX-18035S	SILICONE	85±5
SB-6		1/4" X 1/2" X 4"	TR-1294S	SILICONE	85±5

INDEX

1/44 COVER SHEET
2/44 LISTS OF MATERIALS
3/44 ELEVATIONS – SINGLE SPAN
4/44 ELEVATIONS – SINGLE SPAN
5/44 ELEVATIONS – MULTIPLE SPAN
6/44 ELEVATIONS – MULTIPLE SPAN
7/44 GLAZING CHART
8/44 SINGLE SPAN MULLION CHART
9/44 MULTIPLE SPAN MULLION CHART
10/44 DETAILS – JAMB
11/44 DETAILS – INTERMEDIATE MULLION
12/44 DETAILS – INSIDE CORNER MULLION
13/44 DETAILS – OUTSIDE CORNER MULLION
14/44 DETAILS – DOOR JAMB
15/44 DETAILS – HEAD
16/44 DETAILS – INTERMEDIATE HORIZONTAL
17/44 DETAILS – SINGLE-SPAN SILL
18/44 DETAILS – CURTAINWALL SILL
19/44 DETAILS – DOOR HEADER
20/44 DETAILS – EXPANSION (STACK) HORIZONTAL
21/44 ANCHOR DETAILS – JAMB
22/44 ANCHOR DETAILS – INT MULLION
23/44 ANCHOR DETAILS – INSIDE CORNER MULLION
24/44 ANCHOR DETAILS – OUTSIDE CORNER MULLION
25/44 ANCHOR DETAILS – OUTSIDE CORNER MULLION
26/44 ANCHOR DETAILS – SINGLE SPAN HEAD
27/44 ANCHOR DETAILS – MULTIPLE SPAN HEAD
28/44 ANCHOR DETAILS – SINGLE SPAN SILL
29/44 ANCHOR DETAILS – MULTIPLE SPAN SILL
30/44 ANCHOR DETAILS – HEAD/SILL STRAP ANCHORS
31/44 ANCHOR LAYOUTS
32/44 ANCHOR LAYOUTS
33/44 ANCHOR LAYOUTS
34/44 ANCHOR LAYOUTS
1 35/44 ANCHOR LAYOUTS
36/44 EXTRUSIONS
37/44 EXTRUSIONS
38/44 EXTRUSIONS
39/44 EXTRUSIONS
40/44 EXTRUSIONS
41/44 EXTRUSIONS
42/44 EXTRUSIONS & STEEL SHAPES
43/44 STEEL & BRAKE SHAPES
44/44 REGLAZE DETAILS

GENERAL NOTES

DESIGN PARAMETERS

2 2007 AND 2010 FLORIDA BUILDING CODE WITH HVHZ REQUIREMENTS
TAS-201 – LARGE AND SMALL MISSILE IMPACT
TAS-202 – AIR LEAKAGE, WATER PENETRATION AND STRUCTURAL PERFORMANCE
TAS-203 – CYCLIC WIND PRESSURE LOADING

ASTM STANDARDS

E283 STATIC AIR LEAKAGE
E331 STATIC WATER PENETRATION
E501.1 DYNAMIC WATER PENETRATION
E330 UNIFORM STRUCTURAL DESIGN
E1886 LEVEL "D" IMPACT BY MISSILE & CYCLIC PRESSURES
E1996 LEVEL "E" IMPACT BY WINDBORNE DEBRIS
AAMA – TIR – A9 – 91

SYSTEM DIMENSIONS

3 1/2" x 7 3/4" WITH 1 5/16" GLAZING
3 1/2" x 7" WITH 9/16" OR 5/8" GLAZING

FINISH

ON A PER JOB BASIS (EXPOSED AREAS)
CLEAR ANODIZED (NON EXPOSED AREAS)
MILL (NON-EXPOSED AREAS SUCH AS SETTING CHAIRS, ANCHOR CLIPS, ETC)
ALUMINUM IN CONTACT WITH DISSIMILAR MATERIALS SHALL BE PROTECTED AS SPECIFIED IN SECTION 2003.8.4 OF THE FLORIDA BUILDING CODE (FBC)

ALUMINUM ALLOYS

6063-T5, 6063-T6 AND 6005-T5 (SEE ALSO EXTRUSIONS ON SHEETS 36-43)

STEEL

ALL REINFORCING STEEL SHALL BE PER ASTM-A36 (PRIME PAINTED)

GLASS

SEE "GLASS TYPES" SECTION ON THIS COVER SHEET
SEE GLAZING CHART ON SHEET 7

GASKETS

SEE "GLAZING GASKETS AND TAPES" SECTION ON THIS COVER SHEET

SEALANTS

SEE "SEALANT TYPES" SECTION ON THIS COVER SHEET
SEE "PERIMETER SEALANT OPTIONS" ON SHEETS 10, 15, 17 & 18

ANCHORAGE

FASTENERS AND ANCHOR BOLTS TO BE CORROSION RESISTANT AS DETAILED HEREIN AND CONFORM TO THE FLORIDA BUILDING CODE (FBC)

GLASS TYPES

TAG	DESCRIPTION
GL1	1 5/16" THK. INSULATED GLASS LARGE MISSILE I.G. LAMI CONSISTING OF: -1/4" CLEAR, TEMPERED -1/2" AIRSPACE -1/4" CLEAR ,HEAT STRENGTHENED -0.090 SENTRYGLAS – MDCA 1 -1/4" CLEAR ,HEAT STRENGTHENED
GL2	9/16" THK. LAMINATED GLASS LARGE MISSILE LAMI CONSISTING OF: -1/4" CLEAR ,HEAT STRENGTHENED -0.090 SENTRYGLAS – MDCA 1 -1/4" CLEAR ,HEAT STRENGTHENED
GL3	1 5/16" COMPOSITE METAL PANEL LARGE MISSILE, CONSISTING OF: 4MM COMPOSITE ALUMINUM CLEAR ANODIZED 1" RIGID INSULATION .060 ALUM. SHEET CLEAR ANODIZED
GL4	5/8" THK. LAMINATED GLASS LAMINATED LEVEL "E" LARGE MISSILE CONSISTING OF: -1/4" CLEAR ,HEAT STRENGTHENED -0.180 SENTRYGLAS – MDCA 1 -1/4" CLEAR ,HEAT STRENGTHENED
GL5	9/16" THK. LAMINATED GLASS LARGE MISSILE LAMI CONSISTING OF: -1/4" CLEAR ,HEAT STRENGTHENED -0.077" SAFLEX STORM – MDCA 1 -1/4" CLEAR ,HEAT STRENGTHENED

SEALANT TYPES

TAG	DESCRIPTION
S-1	DOW-CORNING 983 (2 PART SILICONE) COLOR: (BLACK) SHOP APPLIED STRUCTURAL SILICONE SEALANT
S-2	DOW-CORNING 795 (1 PART SILICONE) COLOR: (BLACK) SHOP APPLIED WEATHER SEAL AND PERIMETER SEALANT
S-3	DOW-CORNING 795 (1 PART SILICONE) COLOR: (TO MATCH FRAME) SHOP APPLIED JOINERY SILICONE SEALANT
S-4	DOW-CORNING 795 (1 PART SILICONE) COLOR: (TO BE DETERMINED) FIELD JOINERY AND PERIMETER SILICONE SEALANT
S-5	DOW-CORNING 995 (1 PART SILICONE) COLOR: (BLACK) FIELD REGLAZE STRUCTURAL SILICONE SEALANT

FOR MIAMI-DADE CO. B.C.C.O.

Approved as complying with the Florida Building Code
Date 10/20/2011
NOA# 11-0401.06
Miami Dade Product Control
By

JEFFREY H MARSH
LICENSE
No 70018
STATE OF
FLORIDA
PROFESSIONAL ENGINEER
10/5/2011

GLASS COMPANY
TRAINOR
1101 13TH STREET WEST RIVIERA BEACH, FLORIDA 33404
PH. (561) 863-7078 FAX (561) 863-7088
www.trainorglass.com
ILLINOIS FLORIDA GEORGIA NEW JERSEY COLORADO TEXAS ARIZONA VIRGINIA MARYLAND

REVISIONS

NO.	DATE	BY	
1	6/20/11	BBC	ADDED SETTING BLOCK DIMENSIONAL, REVISED SHEET LAYOUTS
2	9/28/11	BBC	ADDED NOTES TO GLAZING GASKETS AND TAPE
3			
4			
5			
6			

DESIGN ENGINEERING & CONSULTING Inc.
200 E. COLLINS BLVD., SUITE 100 PH. 972-444-9640
RICHARDSON, TEXAS 75080 FAX 972-444-4284

Date	Scale
3-3-11	NONE

Drawing No 4326438

Drawing Title 113 PSF LARGE MISSILE IMPACT COVER SHEET

Sheet No 1 /44

LISTS OF MATERIALS

FASTENERS

NO.	PROFILE	DESCRIPTION
F-1		#12-14 x 1 1/2" HWH SMS
F-4		#12-24 x 5/8" PH SMS (S.S. OR CAP SEAL)
F-5		12-24 x 3/4" HWH SMS
F-6		12-24 x 3/4" 300 SERIES FH UNDER CUT S.S. SCREW
F-7		12-24 x 1 1/2" PH SMS (S.S. OR CAP SEAL)
F-10		3/8" x 2" HEX HEAD THRU-BOLT w/ WASHER & LOCK NUT
F-11		5/8-11 x 2 1/2" CONTI DUO-TAPTITE, Gr. 5 Δ WITH 1/2" MIN THICKNESS STEEL
F-12		3/8-16 X 4" LONG FULLY THREADED H.H.M.B. GR.5 WITH (2) HH NUT ZINC PLATED
F-13		5/8" x 2 3/4" LONG HHMB (GR5) w/ (2) FLAT WASHERS AND LOCK NUT
F-14		3/8" x 1 3/4" FH BOLT w/ FLAT WASHER AND LOCK NUT
F-20		#8-32 x 5/8" P.H. S.M.S.
F-22		Δ1/4" HH BUILDEX TAPCON CONCRETE ANCHOR W/ 1" MIN EMBED
F-24		1/4"-20 x 3/4" 300 SERIES (S.S.) FH SMS
F-25		1/4" x 1" HEX HEAD THRU BOLT w/ WASHER AND LOCK NUT
F-26		5/8" DIA HILTI HIT-HY 150 MAX ADHESIVE ANCHOR w/ 5 5/8" MIN EMBEDMENT
F-29		M16 (5/8") (GR8.8) 2 3/4" LONG HALFEN TEE-BOLTS Δ
F-30		5/8" DIA. (5" LONG) HILTI KWIK BOLT III WITH 4" MIN EMBEDMENT
F-31		5/8" DIA (5" LONG) POWERS FASTENERS WEDGE BOLT Δ WITH 2-1/2" MIN EMBEDMENT
F-32		#12-14 x 1 1/2" HWH DRIL-FLEX FASTENER
F-33		#6-32 x 1/2" 300 SERIES (S.S.) FH SMS
F-34		M16 (5/8") (GR8.8) 3" LONG HALFEN TEE-BOLTS Δ
F-37		1/2" -13 X 2 1/2" CONTI DUO-TAPTITE, Gr. 5 Δ WITH 1/2" MIN STEEL THICKNESS
F-38		5/8" x 3 1/2" LONG HHMB (GR5) w/ (2) FLAT WASHERS AND LOCK NUT
F-39		#12 x 3/4" PH SMS
F-40		3/8" x 1 1/2" FH MACHINE SCREW
F-41		3/8"-16 x 2" FH SMS w/ LOC-TITE
F-42		1/2" DIA. 5"LONG HILTI KWIK BOLT III WITH 4" MIN. EMBEDMENT
F-43		5/8"-11 x 2 3/4" FH BOLT w/ FLAT WASHER AND LOCK NUT
F-44		1/2"-13 x 1 1/2" 300 SERIES (S.S.) FH BOLT
F-45		1/2"-13 x 1 1/2" 300 SERIES (S.S.) FH MACHINE BOLT w/ LOC-TITE
F-46		1/2" x 6" 300 SERIES (S.S.) HEX HEAD BOLT w/ (S.S.) FLAT WASHERS & (S.S.) NYLON LOCK NUT

FASTENERS (CONT)

NO.	PROFILE	DESCRIPTION
F-47		3/8" x 3 3/4" 300 SERIES (S.S.) BOLT w/ (S.S.) FLAT WASHER AND (S.S.) NYLON LOCK NUT
F-48		1/4" x 2" 300 SERIES (S.S.) FH MACHINE SCREW
F-49		1/2"-13 x 2" 300 SERIES (S.S.) FH MACHINE BOLT w/ LOC-TITE
F-50		1/2"-13 x 2 1/2" 300 SERIES (S.S.) FH MACHINE BOLT w/ LOC-TITE
F-51		#12-14 x 1" UNDERCUT FH DRIL-FLEX FASTENER
F-52		#12 x 5/8" HWH SMS
F-53		3/4" DIA HILTI KWIK BOLT III w/ 5" MIN EMBEDMENT
F-54		3/4" x 2 3/4" (GR5) HHMB w/ (2) FLAT WASHERS & LOCK NUT
F-55		M20 (3/4") x 3" (GR8.8) HALFEN TEE-BOLTS Δ
F-56		1/2" x 1 1/2" (GR5) HHMB w/ HALFEN CHANNEL NUT (LP5411)
F-57		1/2" x 3" (GR5) HHMB w/ (2) FLAT WASHERS & HALFEN CHANNEL NUT (LP5411)
F-58		1/2" x 3" (GR5) HHMB w/ (2) FLAT WASHERS & LOCK NUT
F-59		M12 (1/2") x 4" (GR8.8) HALFEN TEE BOLTS Δ
F-60		M12 (1/2") x 3" (GR8.8) HALFEN TEE BOLTS Δ
F-61		1/2"-13 x 1 1/2" FH MACHINE SCREW w/ FLAT WASHER & LOCK NUT
F-62		M16 (5/8") (GR8.8) 4" LONG HALFEN TEE-BOLTS Δ

FOR MIAMI-DADE CO. B.C.C.O.

Approved as complying with the Florida Building Code
Date 10/20/2011
NOA# 11-0401.06
Miami Dade Product Control
By

JEFFREY H MARSH
LICENSE
No 70018
STATE OF FLORIDA
PROFESSIONAL ENGINEER
10/5/2011

TRAINOR GLASS COMPANY
1101 13TH STREET WEST RIVIERA BEACH, FLORIDA 33404
PH. (561) 863-7078 FAX (561) 863-7088
www.trainorglass.com
ILLINOIS FLORIDA GEORGIA NEW JERSEY COLORADO TEXAS ARIZONA VIRGINIA MARYLAND

REVISIONS

NO.	DATE	BY	DESC.
1	9/7/11		UPDATED FASTENER INFORMATION
2			
3			
4			
5			
6			

DESIGN ENGINEERING & CONSULTING Inc
2906 N. COLLINS BLVD. - STE 115 RICHARDSON, TEXAS 75080
PH: 972-644-4004 FAX: 972-644-4004

Date	Scale
3-3-11	NONE

Drawing No
4326438

Drawing Title
113 PSF LARGE MISSILE IMPACT LISTS OF MATERIALS

Sheet No
2 /44

1: DESIGN PARAMETERS

DETERMINE THE WIND LOAD REQUIREMENT BASED ON WIND VELOCITY , BUILDING HEIGHT, AND WIND ZONE USING APPLICABLE ASCE 7 STANDARDS OR PROJECT WIND TUNNEL ANALYSIS

2: GLAZING TYPES AND SIZES

SEE CHART ON SHEET 7 FOR ALLOWABLE DESIGN LOAD CAPACITY FOR DESIRED GLAZING TYPES AND SIZE

3: MULLION LENGTHS

SEE CHARTS ON SHEET 8 FOR ALLOWABLE DESIGN LOAD CAPACITY OF MULLION HEIGHTS AND MODULE WIDTHS. THE CAPACITY SHOULD EQUAL OR EXCEED THE DESIGN LOAD GIVEN FOR THE SPECIFIC PROJECT.

4: ANCHOR OPTIONS

SEE DETAILS ON 21-30 TO SELECT ANCHOR AND SUBSTRATE OPTIONS WITH CAPACITY EQUAL TO OR GREATER THAN THE DESIGN LOAD GIVEN.

5: ENTIRE ASSEMBLY

MULTIPLE UNITS CAN BE INSTALLED SIDE BY SIDE FOR AN UNLIMITED OVERALL ROUGH OPENING

NOTICE: 4 SIDED CAPTURED WITH 2 1/2" EXTERIOR COVERS ARE SHOWN IN ELEVATION.

REFER TO SHEETS 10-20 FOR 3 1/2" EXTERIOR COVERS AND 2-4 SIDED SSG OPTIONS.

▶ DEAD LOAD ANCHOR

● WIND LOAD ANCHOR

M_T = COMBINED MODULES

M_I = INSIDE CORNER MODULE

M_O = OUTSIDE CORNER MODULE

M_J = JAMB MODULE

W1 = TYPICAL MODULE

W2 = TYPICAL MODULE

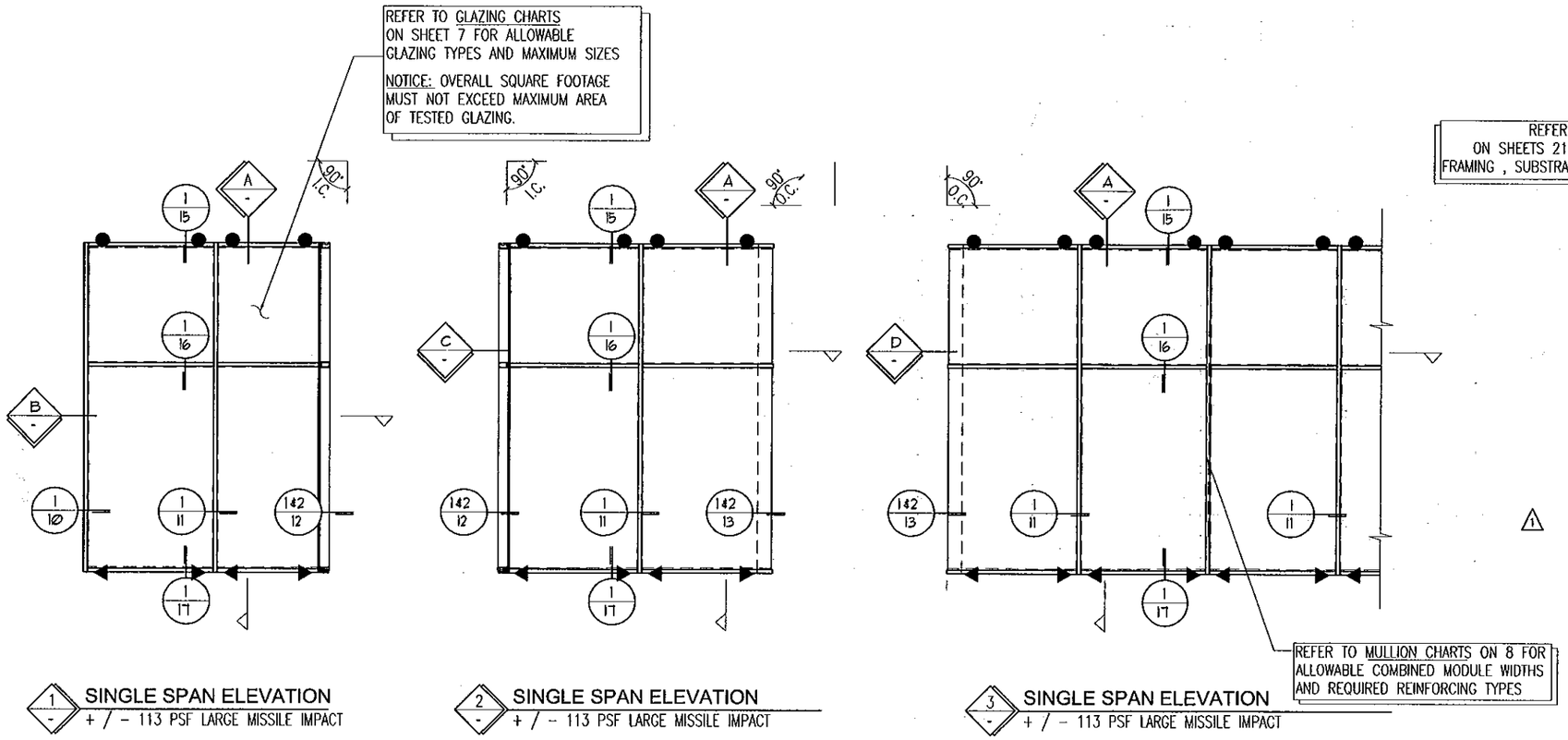

1 SINGLE SPAN ELEVATION
+ / - 113 PSF LARGE MISSILE IMPACT

2 SINGLE SPAN ELEVATION
+ / - 113 PSF LARGE MISSILE IMPACT

3 SINGLE SPAN ELEVATION
+ / - 113 PSF LARGE MISSILE IMPACT

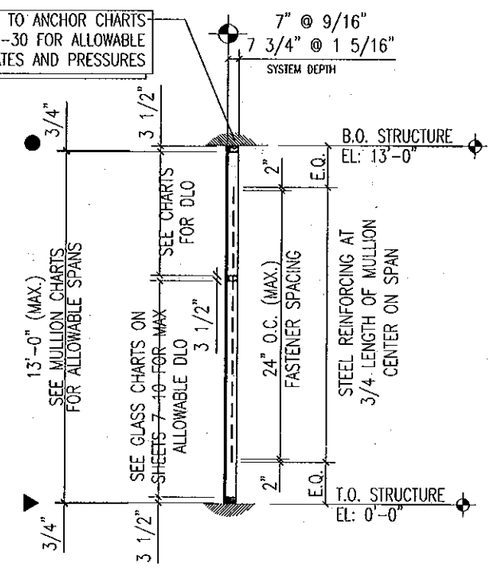

A WALL SECTION
+ / - 113 PSF LARGE MISSILE IMPACT

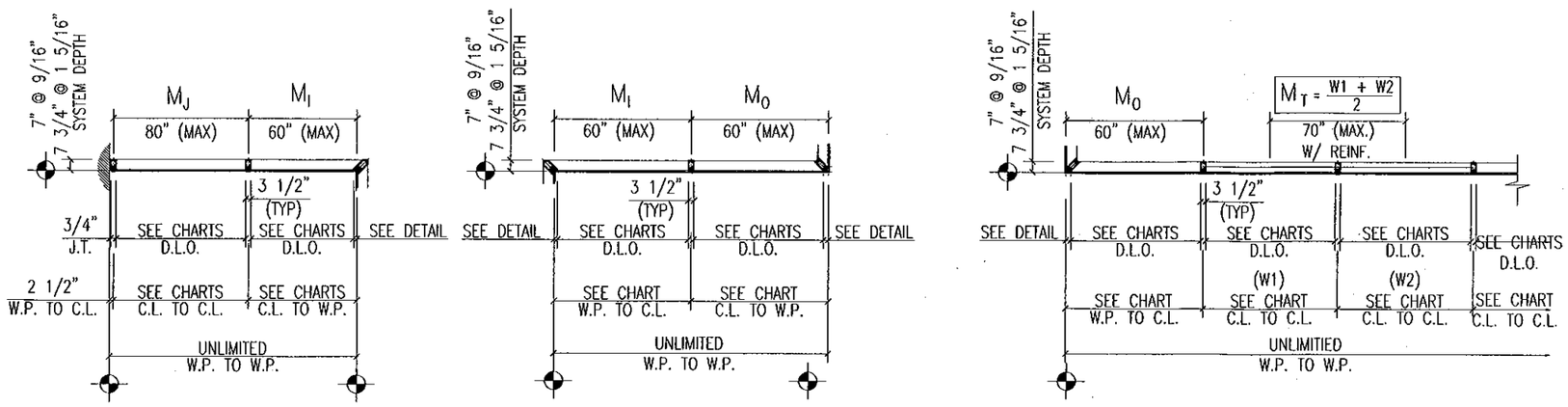

B KEY PLAN
+ / - 113 PSF LARGE MISSILE IMPACT

C KEY PLAN
+ / - 113 PSF LARGE MISSILE IMPACT

D KEY PLAN
+ / - 113 PSF LARGE MISSILE IMPACT

FOR MIAMI-DADE CO. B.C.C.O.

Approved as complying with the Florida Building Code
Date 10/20/2011
NOA# 11-0401.06
Miami-Dade Product Control
By

JEFFREY H MARSH
LICENSE
No 70018
STATE OF
FLORIDA
PROFESSIONAL ENGINEER
10/5/2011

GLASS COMPANY
1101 13TH STREET WEST RIVIERA BEACH, FLORIDA 33404
PH. (561) 863-7078 FAX (561) 863-7086
www.trainorglass.com
TRAINOR
ILLINOIS FLORIDA GEORGIA NEW JERSEY COLORADO TEXAS ARIZONA VIRGINIA MARYLAND

NO.	DATE	BY	REVISIONS
1	8/20/11	BC	REVISED SCALE OF ELEVATIONS, ADDED ANCHOR LOCATIONS TO ELEVATIONS
2			
3			
4			
5			
6			

DESIGN ENGINEERING & CONSULTING Inc.
2365 N. COLLINS BLVD. - SUITE 120 RICHARDSON, TEXAS 75080
TEL 972-644-0840 FAX 972-644-4204

Date	Scale
3-3-11	1/4" = 1'-0"

Drawing No
4326438

Drawing Title
113 PSF LARGE MISSILE IMPACT ELEVATIONS

Sheet No
3 / 44

REFER TO GLAZING CHART ON SHEET 7 FOR ALLOWABLE GLAZING TYPES AND MAXIMUM SIZES

NOTICE: OVERALL SQUARE FOOTAGE MUST NOT EXCEED MAXIMUM AREA OF TESTED GLAZING.

REFER TO MULLION CHART ON 8 FOR ALLOWABLE COMBINED MODULE WIDTHS AND REQUIRED REINFORCING TYPES

REFER TO ANCHOR CHARTS ON SHEETS 21-30 FOR ALLOWABLE FRAMING, SUBSTRATES AND PRESSURES

NOTICE: 4 SIDED CAPTURED WITH 2 1/2" EXTERIOR COVERS ARE SHOWN IN ELEVATION.

REFER TO SHEETS 10-20 FOR 3 1/2" EXTERIOR COVERS AND 2-4 SIDED SSG OPTIONS.

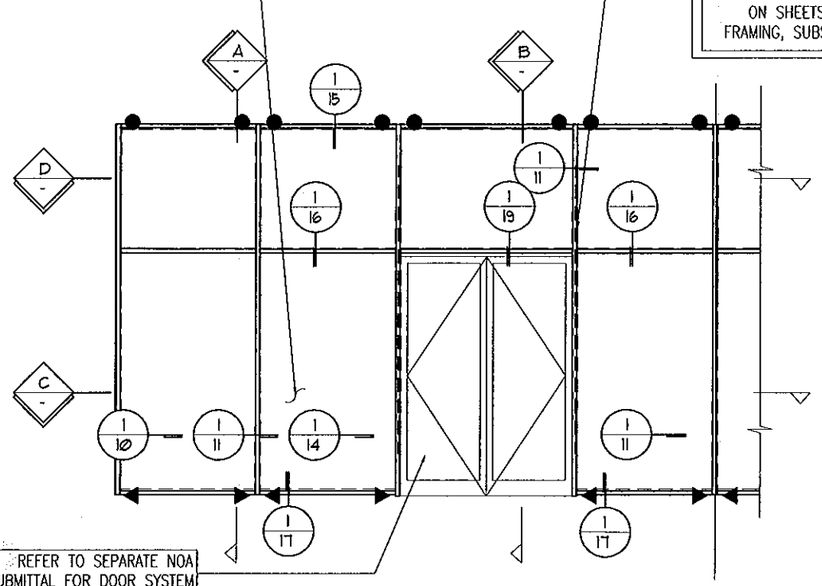

REFER TO SEPARATE NOA SUBMITTAL FOR DOOR SYSTEM

4 SINGLE SPAN ELEVATION W/ DOORS
+ / - 113 PSF LARGE MISSILE IMPACT

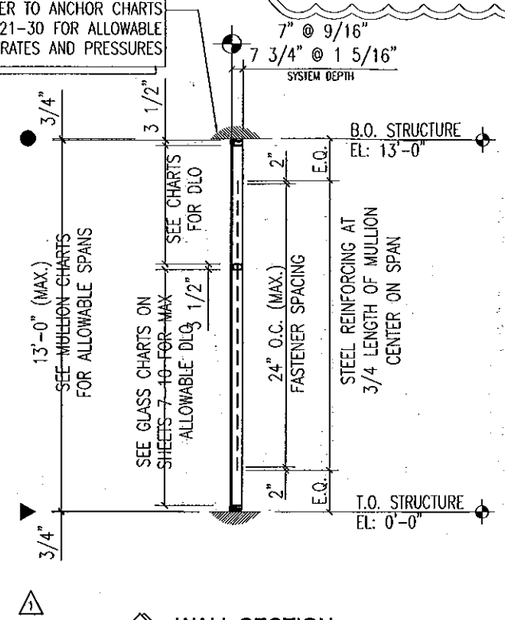

A WALL SECTION
+ / - 113 PSF LARGE MISSILE IMPACT

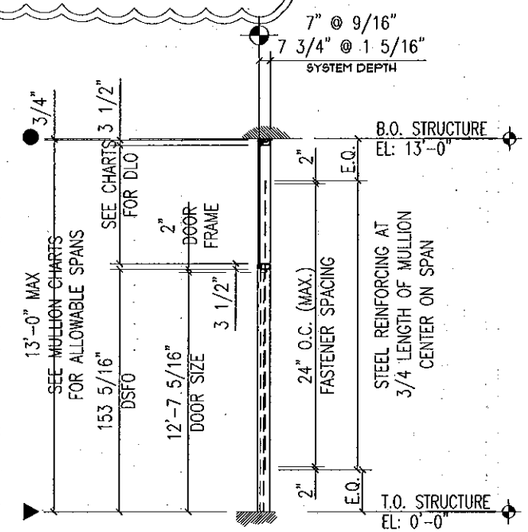

B WALL SECTION W/ DOOR
+ / - 113 PSF LARGE MISSILE IMPACT

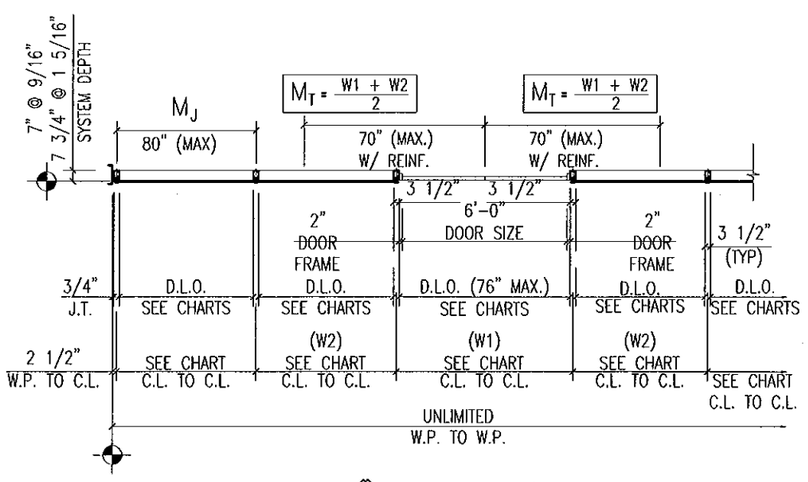

C KEY PLAN W/ DOOR
+ / - 113 PSF LARGE MISSILE IMPACT

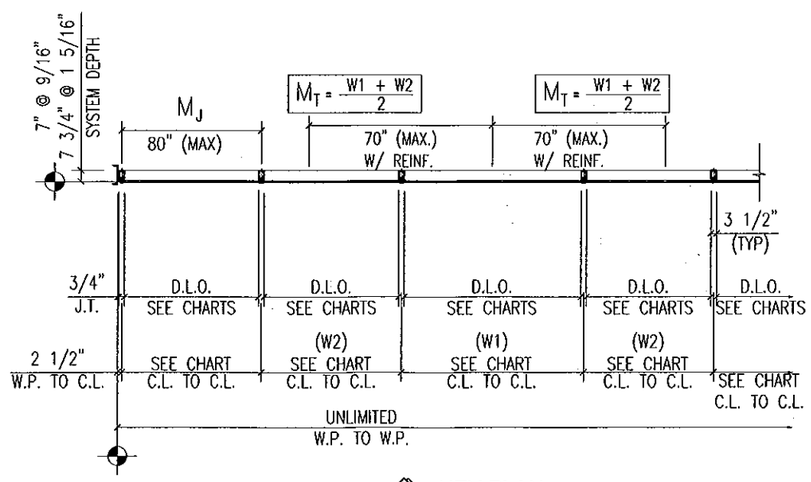

D KEY PLAN
+ / - 113 PSF LARGE MISSILE IMPACT

▶ DEAD LOAD ANCHOR

● WIND LOAD ANCHOR

M_T = COMBINED MODULES

M_I = INSIDE CORNER MODULE

M_O = OUTSIDE CORNER MODULE

M^J = JAMB MODULE

W1 = TYPICAL MODULE

W2 = TYPICAL MODULE

1: DESIGN PARAMETERS

DETERMINE THE WIND LOAD REQUIREMENT BASED ON WIND VELOCITY , BUILDING HEIGHT, AND WIND ZONE USING APPLICABLE ASCE 7 STANDARDS OR PROJECT WIND TUNNEL ANALYSIS

2: GLAZING TYPES AND SIZES

SEE CHART ON SHEET 7 FOR ALLOWABLE DESIGN LOAD CAPACITY FOR DESIRED GLAZING TYPES AND SIZE

3: MULLION LENGTHS

SEE CHARTS ON SHEET 8 FOR ALLOWABLE DESIGN LOAD CAPACITY OF MULLION HEIGHTS AND MODULE WIDTHS. THE CAPACITY SHOULD EQUAL OR EXCEED THE DESIGN LOAD GIVEN FOR THE SPECIFIC PROJECT.

4: ANCHOR OPTIONS

SEE DETAILS ON 21-30 TO SELECT ANCHOR AND SUBSTRATE OPTIONS WITH CAPACITY EQUAL TO OR GREATER THAN THE DESIGN LOAD GIVEN.

5: ENTIRE ASSEMBLY

MULTIPLE UNITS CAN BE INSTALLED SIDE BY SIDE FOR AN UNLIMITED OVERALL ROUGH OPENING

FOR MIAMI-DADE CO. B.C.C.O.

Approved as complying with the Florida Building Code
Date 10/20/2011
NOA# 11-0401.06
Miami Dade Product Control
By

JEFFREY H MARSH
LICENSE
No 70018
STATE OF FLORIDA
PROFESSIONAL ENGINEER
10/5/2011

GLASS COMPANY
1101 13TH STREET WEST RIVIERA BEACH, FLORIDA 33404
PH. (561) 863-7078 FAX (561) 863-7088
www.trainorglass.com
TRAINOR
ILLINOIS FLORIDA GEORGIA NEW JERSEY COLORADO TEXAS ARIZONA VIRGINIA MARYLAND

NO.	DATE	BY	REVISIONS
1	4/22/11	BDD	REDESIGNED ELEVATION SCALE, ADDED ANCHOR LOCATIONS TO ELEVATIONS
2			
3			
4			
5			
6			

DESIGN ENGINEERING & CONSULTING Inc
2828 N. CLIFFORD BLVD. • SUITE 130
BEAUMONT, TEXAS 77706
PH. 972-344-9500
FAX 972-344-9506

Date	Scale
3-3-11	1/4" = 1'-0"

Drawing No 4326438

Drawing Title: 113 PSF LARGE MISSILE IMPACT ELEVATIONS

Sheet No 4 / 44

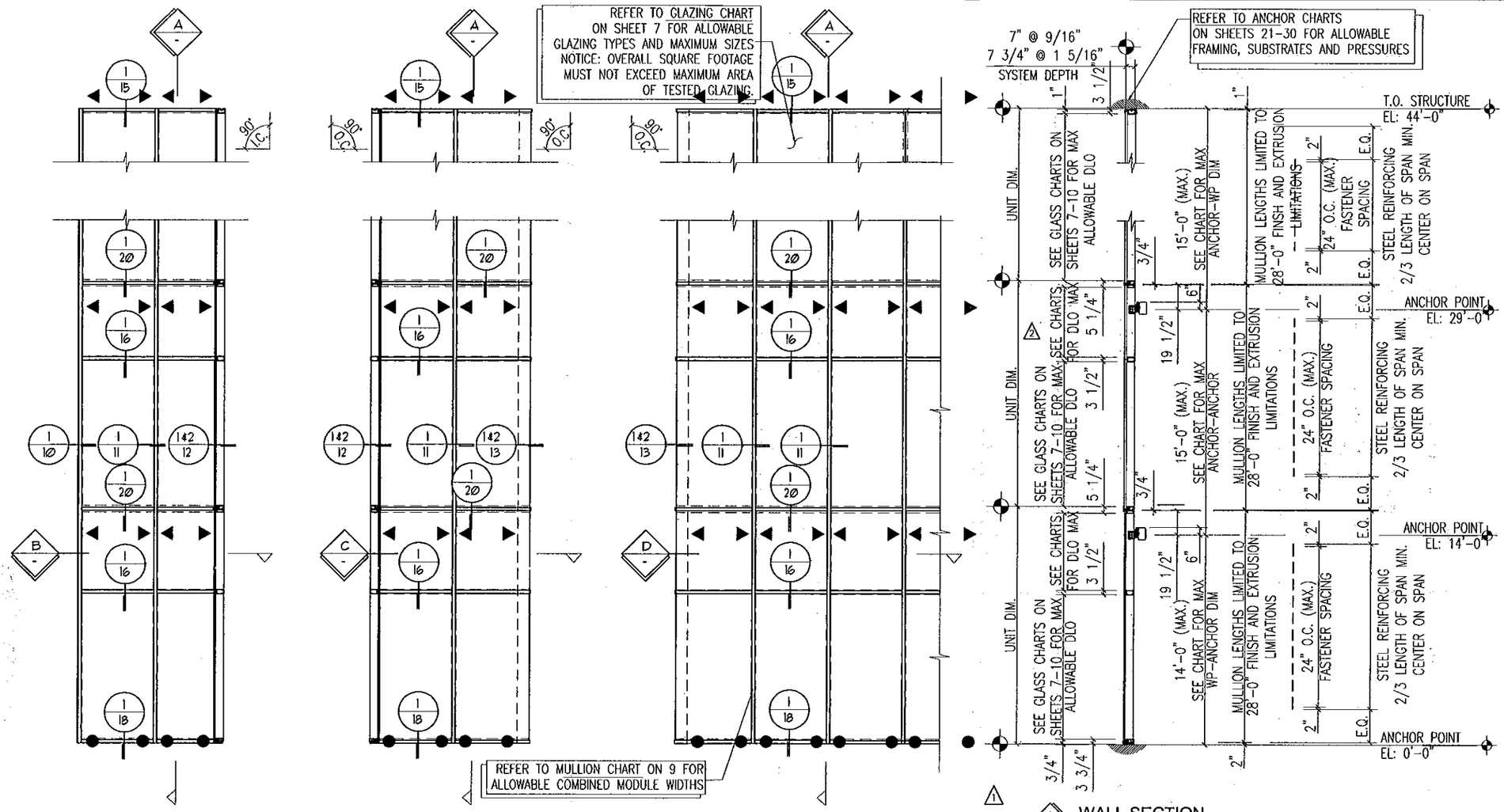

5 MULTIPLE SPAN ELEVATION
+ / - 113 PSF LARGE MISSILE IMPACT

6 MULTIPLE SPAN ELEVATION
+ / - 113 PSF LARGE MISSILE IMPACT

7 MULTIPLE SPAN ELEVATION
+ / - 113 PSF LARGE MISSILE IMPACT

A WALL SECTION
+ / - 113 PSF LARGE MISSILE IMPACT

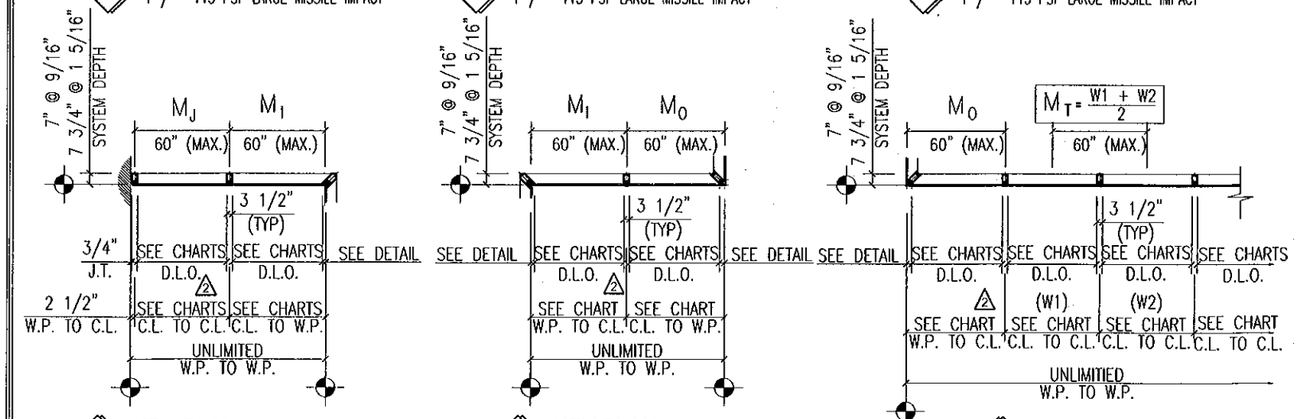

B KEY PLAN
+ / - 113 PSF LARGE MISSILE IMPACT

C KEY PLAN
+ / - 113 PSF LARGE MISSILE IMPACT

D KEY PLAN
+ / - 113 PSF LARGE MISSILE IMPACT

▶ DEAD LOAD ANCHOR

● WIND LOAD ANCHOR

M_T = COMBINED MODULES

M_I = INSIDE CORNER MODULE

M_O = OUTSIDE CORNER MODULE

M_J = JAMB MODULE

W1 = TYPICAL MODULE

W2 = TYPICAL MODULE

1: DESIGN PARAMETERS

DETERMINE THE WIND LOAD REQUIREMENT BASED ON WIND VELOCITY , BUILDING HEIGHT, AND WIND ZONE USING APPLICABLE ASCE 7 STANDARDS OR PROJECT WIND TUNNEL ANALYSIS

2: GLAZING TYPES AND SIZES

SEE CHART ON SHEET 7 FOR ALLOWABLE DESIGN LOAD CAPACITY FOR DESIRED GLAZING TYPES AND SIZE

3: MULLION LENGTHS

MULLION LENGTHS ARE LIMITED TO 28'-0" DUE TO EXTRUSION AND FINISH LIMITATIONS

4: ANCHOR POINT TO ANCHOR POINT

SEE CHART ON SHEET 9 FOR ALLOWABLE DESIGN LOAD CAPACITY OF ANCHOR POINTS AND MODULE WIDTHS. THE CAPACITY SHOULD EQUAL OR EXCEED THE DESIGN LOAD GIVEN FOR THE SPECIFIC PROJECT.

5: ANCHOR OPTIONS

SEE DETAILS ON 21-30 TO SELECT ANCHOR AND SUBSTRATE OPTIONS WITH CAPACITY EQUAL TO OR GREATER THAN THE DESIGN LOAD GIVEN.

6: ENTIRE ASSEMBLY

MULTIPLE UNITS CAN BE INSTALLED SIDE BY SIDE FOR AN UNLIMITED OVERALL ROUGH OPENING

NOTICE : 4 SIDED CAPTURED WITH 2 1/2" EXTERIOR COVERS ARE SHOWN IN ELEVATION.

REFER TO SHEETS 10-20 FOR 3 1/2" EXTERIOR COVERS AND 2-4 SIDED SSG OPTIONS.

FOR MIAMI-DADE CO. B.C.C.O.

Approved as complying with the Florida Building Code
Date 10/20/2011
NOA# 11-0401.06
Miami Dade Product Control
By

JEFFREY H MARSH
LICENSE
No 70018
STATE OF FLORIDA
PROFESSIONAL ENGINEER
10/5/2011

TRAINOR GLASS COMPANY
1101 13TH STREET WEST RIVIERA BEACH, FLORIDA 33404
PH. (561) 863-7078 FAX (561) 863-7088
www.trainorglass.com
ILLINOIS FLORIDA GEORGIA NEW JERSEY COLORADO TEXAS ARIZONA VIRGINIA MARYLAND

DESIGN ENGINEERING & CONSULTING Inc
3909 N. COLLINS BLVD. - SUITE 100 ARLINGTON, TEXAS 76305
PH: 972-544-9440 FAX: 972-544-9384

REVISIONS

NO.	DATE	BY	
1	9/22/11	BEC	ADDED ANCHOR LOCATIONS TO ELEVATIONS
2	9/28/11	BEC	REVISED GLAZING/MULLION DIMENSION TEXT
3			
4			
5			
6			

Date	Scale
3-3-11	1/4" = 1'-0"

Drawing No 4326438

Drawing Title 113 PSF LARGE MISSILE IMPACT ELEVATIONS

Sheet No 5 / 44

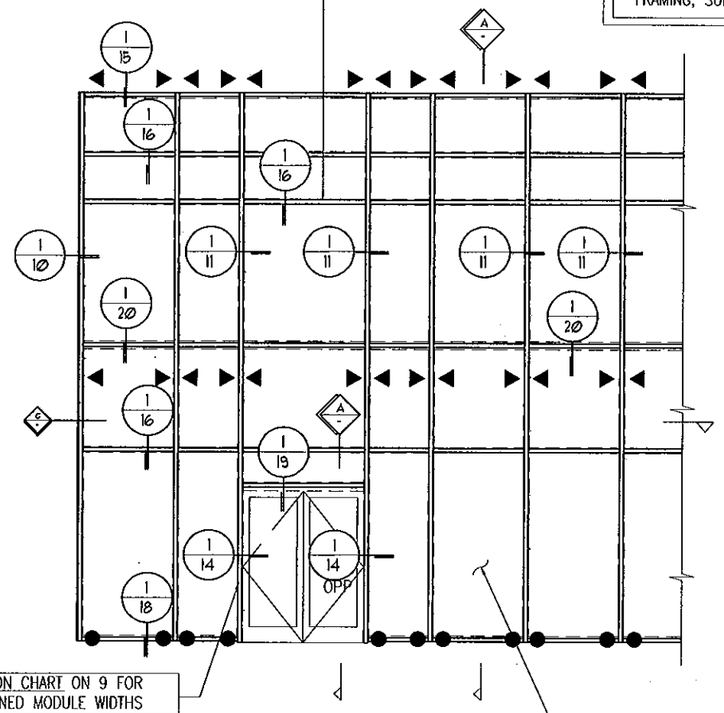

8 MULTIPLE SPAN ELEVATION W/ DOORS
+ / - 113 PSF LARGE MISSILE IMPACT

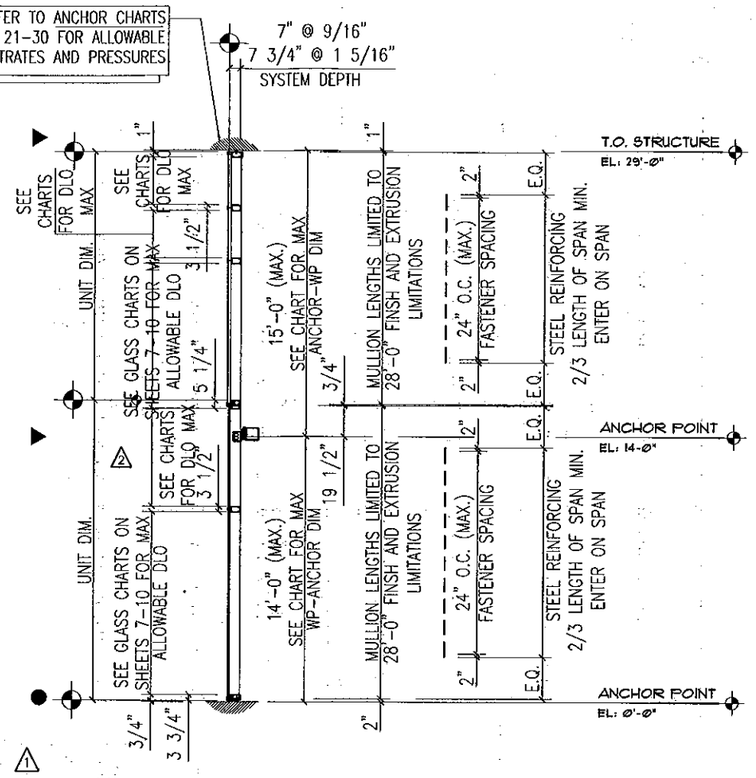

A WALL SECTION
+ / - 113 PSF LARGE MISSILE IMPACT

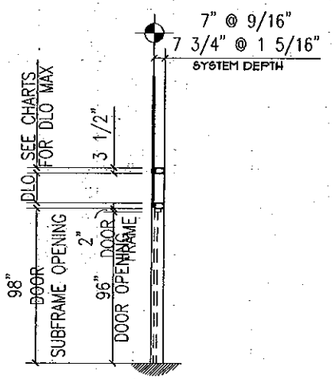

B WALL SECTION
+ / - 113 PSF LARGE MISSILE IMPACT

REFER TO GLAZING CHARTS
ON SHEET 7 FOR ALLOWABLE
GLAZING TYPES AND MAXIMUM SIZES
NOTICE: OVERALL SQUARE FOOTAGE
MUST NOT EXCEED MAXIMUM AREA
OF TESTED GLAZING.

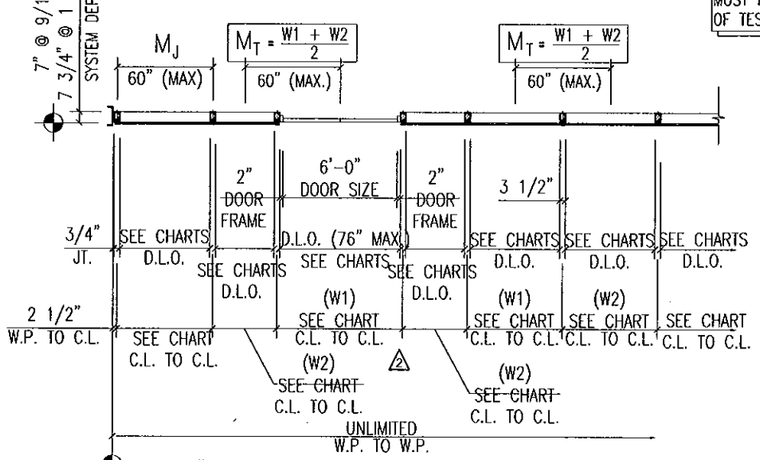

C KEY PLAN
+ / - 113 PSF LARGE MISSILE IMPACT

1: DESIGN PARAMETERS

DETERMINE THE WIND LOAD REQUIREMENT BASED ON WIND VELOCITY, BUILDING HEIGHT, AND WIND ZONE USING APPLICABLE ASCE 7 STANDARDS OR PROJECT WIND TUNNEL ANALYSIS

2: GLAZING TYPES AND SIZES

SEE CHART ON SHEET 7 FOR ALLOWABLE DESIGN LOAD CAPACITY FOR DESIRED GLAZING TYPES AND SIZE

3: MULLION LENGTHS

MULLION LENGTHS ARE LIMITED TO 28'-0" DUE TO EXTRUSION AND FINISH LIMITATIONS

4: ANCHOR POINT TO ANCHOR POINT

SEE CHART ON SHEET 9 FOR ALLOWABLE DESIGN LOAD CAPACITY OF ANCHOR POINTS AND MODULE WIDTHS. THE CAPACITY SHOULD EQUAL OR EXCEED THE DESIGN LOAD GIVEN FOR THE SPECIFIC PROJECT.

5: ANCHOR OPTIONS

SEE DETAILS ON 21-30 TO SELECT ANCHOR AND SUBSTRATE OPTIONS WITH CAPACITY EQUAL TO OR GREATER THAN THE DESIGN LOAD GIVEN.

6: ENTIRE ASSEMBLY

MULTIPLE UNITS CAN BE INSTALLED SIDE BY SIDE FOR AN UNLIMITED OVERALL ROUGH OPENING

NOTICE : 4 SIDED CAPTURED WITH 2 1/2" EXTERIOR COVERS ARE SHOWN IN ELEVATION.

REFER TO SHEETS 10-20 FOR 3 1/2" EXTERIOR COVERS AND 2-4 SIDED SSG OPTIONS.

FOR MIAMI-DADE CO. B.C.C.O.

Approved as complying with the Florida Building Code
Date 10/20/2011
NOA# 11-0401.06
Miami Dade Product Control
By

JEFFREY H MARSH
LICENSE
No 70018
STATE OF
FLORIDA
PROFESSIONAL ENGINEER
10/5/2011

DEAD LOAD ANCHOR

WIND LOAD ANCHOR

M_T = COMBINED MODULES

M_I = INSIDE CORNER MODULE

M_O = OUTSIDE CORNER MODULE

M_J = JAMB MODULE

W1 = TYPICAL MODULE

W2 = TYPICAL MODULE

GLASS COMPANY
1101 13TH STREET WEST RIVIERA BEACH, FLORIDA 33404
PH. (561) 863-7078 FAX (561) 863-7088
www.trainorglass.com
TRAINOR
ILLINOIS FLORIDA GEORGIA NEW JERSEY COLORADO TEXAS ARIZONA VIRGINIA MARYLAND

REVISIONS

NO.	DATE	BY	
1	8/22/11	RBD	ADDED ANCHOR LOCATIONS TO ELEVATIONS
2	9/26/11	BBC	REVISED OVERLAPPING SUBFRAME TEXT
3			
4			
5			
6			

DESIGN ENGINEERING & CONSULTING Inc.
3206 N. COLLINS BLVD. - SUITE 130 RICHARDSON, TEXAS 75080
PH: 972-644-9640 FAX: 972-644-4094

Date	Scale
3-3-11	1/4" = 1'-0"

Drawing No
4326438

Drawing Title
113 PSF LARGE MISSILE IMPACT ELEVATIONS

Sheet No
6 / 44

MAX. DESIGN PRESSURES (PSF) FOR VARIOUS GLASS TYPES

SQUARE FEET	GLASS WIDTH (DLO)	GLASS HEIGHT (DLO)	GL1 1 5/16" THK.	GL2 9/16" THK.	GL3 1 5/16" THK.	GL4 5/8" THK.	GL5 9/16" THK.
			GLASS & INFILL TYPES				
22.12	48	60	+113, −113	+113, −113	+113, −113	+113, −113	+113, −113
23.86	52						
24.73	54						
25.82	56.5						
27.34	60						
29.96	66						
32.57	72						
34.32	76						
26.34	48	72	+113, −113	+113, −113	+113, −113	+113, −113	+113, −113
28.42	52						
29.46	54						
30.76	56.5						
32.57	60						
35.69	66						
38.80	72						
40.88	76						
30.57	48	84	+113, −113	+113, −113	+113, −113	+113, −113	+113, −113
32.98	52						
34.19	54						
35.69	56.5						
37.80	60						
41.42	66						
45.03	72						
47.44	76						
31.28	48	86	+113, −113	+113, −113		+113, −113	+113, −113
33.74	52						
34.98	54						
36.52	56.5						
38.67	60						
42.37	66						
46.07	72						
48.54	76						
34.80	48	96	+113, −113	+113, −113		+113, −113	+113, −113
37.55	52						
38.92	54						
40.63	56.5						
43.03	60						
47.15	66						
39.03	48	108	+113, −113	+113, −113		+113, −113	+113, −113
42.11	52						
43.65	54						
45.57	56.5						
41.76	48	115.75	+113, −113	+113, −113			
45.05	52						
46.70	54						
48.76	56.5						

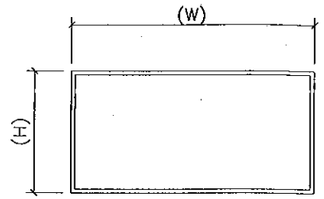

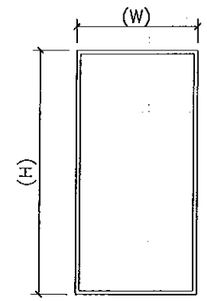

1 7/32" SILICONE BOND WIDTH CHART

WINDLOAD	(SMALLEST LEG OF LARGEST LITE OF GLASS) – INCHES											
	24	30	36	42	48	52	54	56.5	60	66	72	76
113 PSF	OK	OK	OK	OK	OK	OK	OK	OK	OK	FAIL	FAIL	FAIL

A: 1 7/32" SILICONE BOND WIDTH IS ACCEPTABLE FOR ALL GLAZING SIZES WITHIN CHART.
B: REFER TO NOTE (1)

NOTES:

1: ALL GLAZING TYPES AND SIZES ARE ACCEPTABLE AT 113 PSF FOR :
(4) SIDED CAPTURED, (2) SIDED SSG AND (4) SIDED SSG
- REFER TO SHEET 10 FOR JAMB CONDITIONS AND GLAZING OPTIONS
- REFER TO SHEET 11 FOR TYPICAL MULLION CONDITIONS AND GLAZING OPTIONS
- REFER TO SHEET 12 FOR INSIDE 90deg. CORNER CONDITIONS
- REFER TO SHEET 13 FOR OUTSIDE 90deg. CORNER CONDITIONS
- REFER TO SHEET 14 FOR MULLION AT DOOR CONDITIONS AND GLAZING OPTIONS
- REFER TO SHEET 15 FOR HEAD HORIZONTAL CONDITIONS AND GLAZING OPTIONS
- REFER TO SHEET 16 FOR INTERMEDIATE HORIZONTAL CONDITIONS AND GLAZING OPTIONS
- REFER TO SHEETS 17 & 18 FOR SILL HORIZONTAL CONDITIONS AND GLAZING OPTIONS
- REFER TO SHEET 19 FOR DOOR HEADER CONDITIONS AND GLAZING OPTIONS
- REFER TO SHEET 20 FOR EXPANSION (STACK) HORIZONTAL CONDITIONS AND GLAZING OPTIONS

2: ALL GLAZING SIZES MUST MEET ASTM E1300–04 WITH A SQUARE FOOTAGE LESS THAN OR EQUAL TO THE MAXIMUM TESTED SQUARE FOOT SIZE. REFER TO GLAZING OPTIONS CHART

3: 1 3/8" MINIMUM GLASS BITE AT ALL GLAZING AND FRAMING OPTIONS UP TO 2" MAX. GLASS BITE AT STRUCTURAL SILICONE GLAZED STACK HORIZONTALS. 1

4: 1/4" X 1 7/32" MINIMUM SILICONE BOND AT ALL GLAZING AND FRAMING OPTIONS

5: GLAZING FORMULA = D.L.O. + 2 3/4" HORIZONTALLY AND VERTICALLY. REFER TO D.L.O. ON SHOP DRAWINGS FOR DIMENSION (H) AND (W)

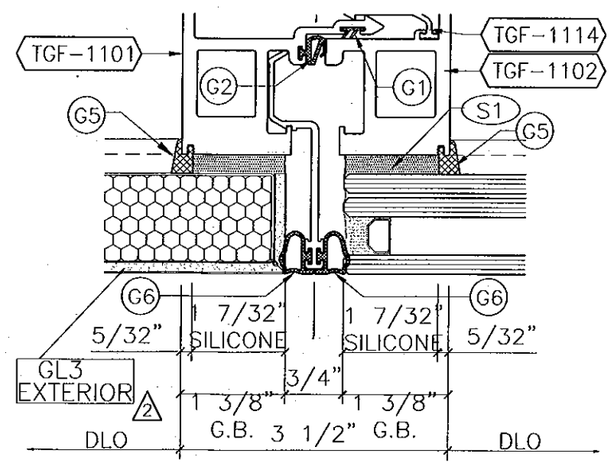

1 VERTICAL BOND WIDTH AND GLASS BITE

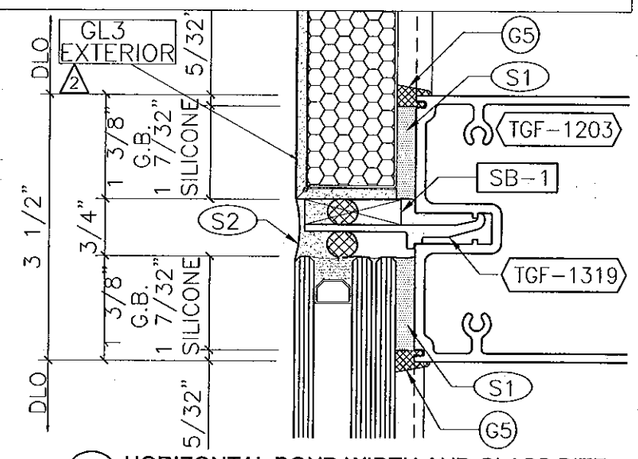

2 HORIZONTAL BOND WIDTH AND GLASS BITE

GLAZING OPTIONS

GLAZING OPTIONS	MAXIMUM TESTED GLASS AND PANELS	
GL1 1/2" AIR SPACE — 1/4" HS; .090 SENTRYGLAS–MDCA 1; 1/4" HS; 1/4" TEMPERED	59.25" X 121" = 49.79 SQ. FT.	+113/−113
GL2 — 1/4" HS; .090 SENTRYGLAS–MDCA 1; 1/4" HS	59.25" X 119.125" = 49.01 SQ. FT.	+113/−113
GL3 — .060 ALUM. PAN; 1" RIGID INSULATION; 4MM COMPOSITE METAL; 2 EXTERIOR	59.25" X 74.875" = 30.81 SQ. FT.	+113/−113
GL4 — 1/4" HS 1; .180 SENTRYGLAS–MDCA; 1/4" HS	59.25" X 98.875" = 40.68 SQ. FT.	+113/−113
GL5 — 1/4" HS 1; .077 SAFLEX STORM–MDCA; 1/4" HS	59.25" X 98.875" = 40.68 SQ. FT.	+113/−113

FOR MIAMI-DADE CO. B.C.C.O.

Approved as complying with the Florida Building Code
Date 10/20/2011
NOA# 11-0401.06
Miami Dade Product Control
By

JEFFREY H MARSH
LICENSE
No 70018
STATE OF
FLORIDA
PROFESSIONAL ENGINEER
10/5/2011

GLASS COMPANY
1101 13TH STREET WEST RIVIERA BEACH, FLORIDA 33404
PH. (561) 863-7078 FAX (561) 863-7088
www.trainorglass.com
TRAINOR
ILLINOIS FLORIDA GEORGIA NEW JERSEY COLORADO TEXAS ARIZONA VIRGINIA MARYLAND

REVISIONS

NO.	DATE	BY	
1	6/20/11	BC	UPDATED SHEET LAYER DESCRIPTIONS AND ADDED MIA GLASS SPEC.
2	6/28/11	BC	ADDED CORNER NOTE
3			
4			
5			
6			

DESIGN ENGINEERING & CONSULTING Inc.
2205 N. COLLINS BLVD., SUITE 130 RICHARDSON, TEXAS 75080
PH: 972-644-0640 FAX: 972-644-0304

Date	Scale
3-3-11	HALF

Drawing No: 4326438

Drawing Title: 113 PSF LARGE MISSILE IMPACT GLASS CHART

Sheet No: 7 / 44

Mullion Span Chart with End Reactions (lbf)

WL (+/-) = 113 psf

Module (in.) M_T, M_O, M_I, M_J	Mull Height H (in.)	Mull Type 1	Mull Type 2	Jamb Type 3	Jamb Type 4	Corner Type 5	Corner Type 6
54	96	2034	2034	1017	1017	1438	1438
57		2147	2147	1074	1074	1518	1518
60		2260	2260	1130	1130	1598	1598
64		X	2411	1205	1205	X	X
68		X	2561	1281	1281	X	X
70		X	2637	1318	1318	X	X
80		X	X	1507	1507	X	X
54	102	2161	2161	1081	1081	1528	1528
57		2281	2281	1141	1141	1613	1613
60		2401	2401	1201	1201	1698	1698
64		X	2561	1281	1281	X	X
68		X	2721	1361	1361	X	X
70		X	2801	1401	1401	X	X
80		X	X	1601	1601	X	X
54	114	2415	2415	1208	1208	1708	1708
57		2550	2550	1275	1275	1803	1803
60		2684	2684	1342	1342	1898	1898
64		X	2863	1431	1431	X	X
68		X	3042	1521	1521	X	X
70		X	3131	1566	1566	X	X
80		X	X	1789	1789	X	X
54	120	2543	2543	1271	1271	1798	1798
57		2684	2684	1342	1342	1898	1898
60		2825	2825	1413	1413	1998	1998
64		X	3013	1507	1507	X	X
68		X	3202	1601	1601	X	X
70		X	3296	1648	1648	X	X
80		X	X	1883	1883	X	X
54	132	2797	2797	1398	1398	1978	1978
57		2952	2952	1476	1476	2087	2087
60		3108	3108	1554	1554	2197	2197
64		X	3315	1657	1657	X	X
68		X	3522	1761	1761	X	X
70		X	3625	1813	1813	X	X
80		X	X	2072	2072	X	X
54	144	3051	3051	1526	1526	2157	2157
57		3221	3221	1610	1610	2277	2277
60		3390	3390	1695	1695	2397	2397
64		X	3616	1808	1808	X	X
68		X	3842	1921	1921	X	X
70		X	3955	1978	1978	X	X
80		X	X	2260	2260	X	X
54	156	3305	3305	1653	1653	2337	2337
57		3489	3489	1744	1744	2467	2467
60		3673	3673	1836	1836	2597	2597
64		X	3917	1959	1959	X	X
68		X	4162	2081	2081	X	X
70		X	4285	2142	2142	X	X
80		X	X	2448	2448	X	X

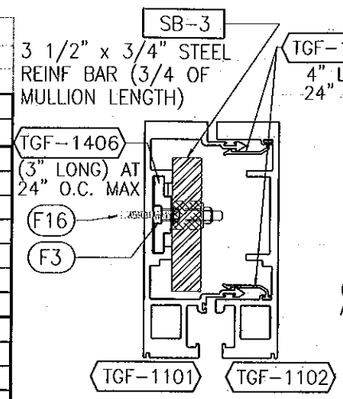

1 MULLION TYPE #1
TGF-1101 AND TGF-1102
(WITHOUT REINFORCING)
ALUMINUM Ixx = 39.776 IN^4
Sxx = 10.164 IN^3

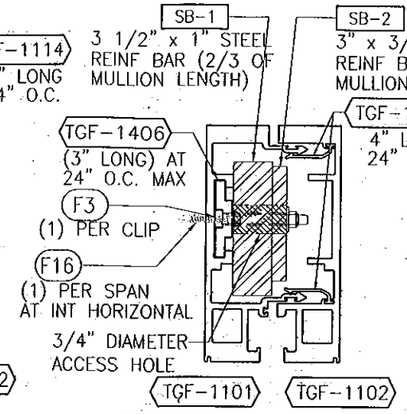

2 MULLION TYPE #2
TGF-1101 AND TGF-1102
(WITH REINFORCING)
ALUMINUM Ixx = 44.813 IN^4
Sxx = 14.756 IN^3

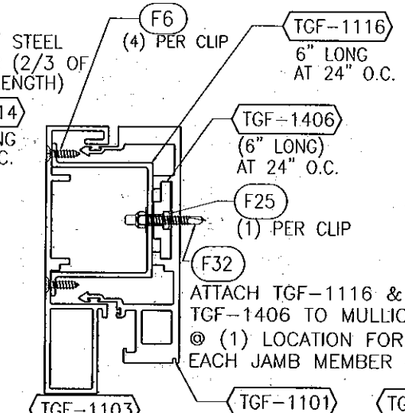

3 MULLION (JAMB) TYPE #3
TGF-1101 AND TGF-1103/TGF-1116
(WITHOUT REINFORCING)
ALUMINUM Ixx = 27.956 IN^4
Sxx = 8.404 IN^3

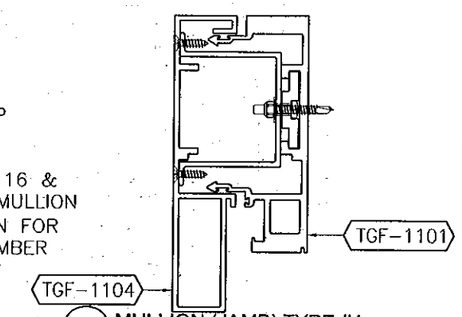

4 MULLION (JAMB) TYPE #4
TGF-1101 AND TGF-1103/TGF-1116
(WITHOUT REINFORCING)
ALUMINUM Ixx = 30.986 IN^4
Sxx = 8.907 IN^3

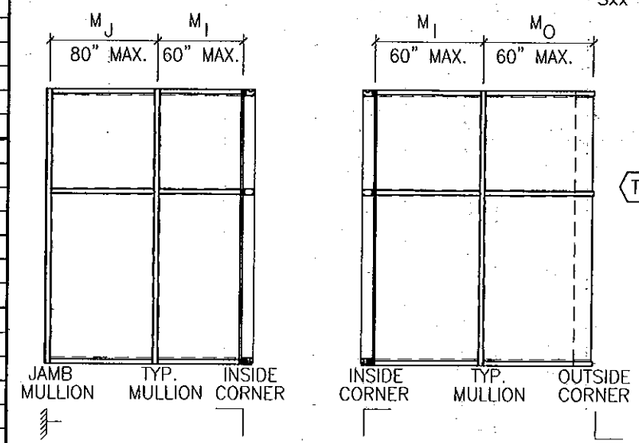

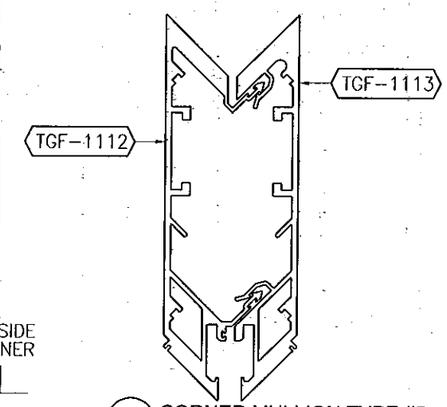

5 CORNER MULLION TYPE #5
TGF-1112 AND TGF-1113
(WITHOUT REINFORCING)
ALUMINUM Ixx = 91.202 IN^4
Sxx = 17.443 IN^3

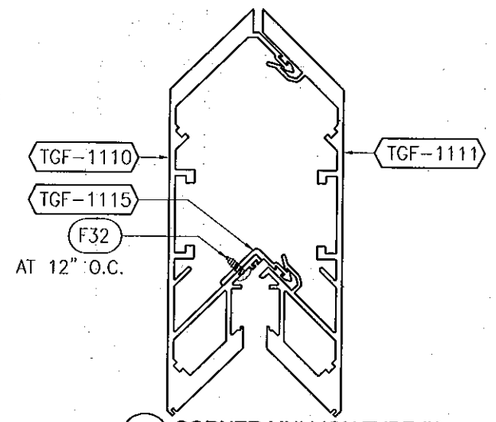

6 CORNER MULLION TYPE #6
TGF-1110 AND TGF-1111
(WITHOUT REINFORCING)
ALUMINUM Ixx = 103.923 IN^4
Sxx = 18.06 IN^3

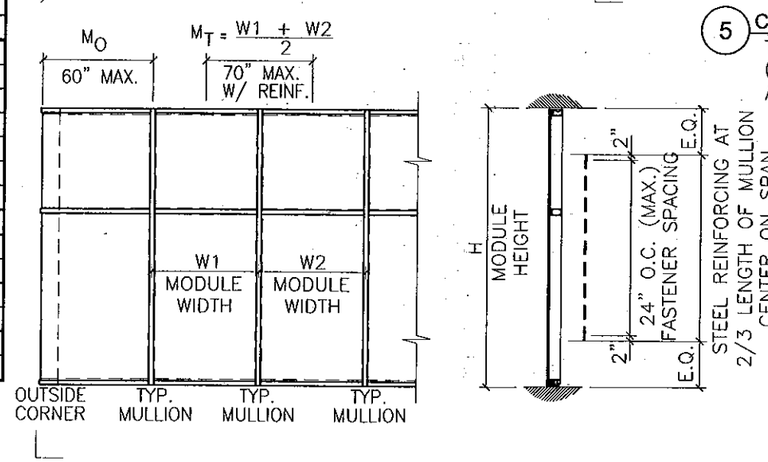

GENERAL NOTES:

- H = MAXIMUM MULLION SPAN
- M_T = MAXIMUM COMBINED MODULES $\frac{W1 + W2}{2}$
- M_I = MAXIMUM INSIDE CORNER MODULE
- M_O = MAXIMUM OUTSIDE CORNER MODULE
- M_J = MAXIMUM JAMB MODULE
- W1 = TYPICAL MODULE
- W2 = TYPICAL MODULE
- FOR SINGLE SPAN MAXIMUM DEFLECTION = L/180 OR 1" (WHICHEVER IS LESS)
- SPANS ARE LIMITED BY MAXIMUM TESTED END REACTIONS

FOR MIAMI-DADE CO. B.C.C.O.

Approved as complying with the Florida Building Code
Date 10/20/2011
NOA# 11-0401.06
Miami-Dade Product Control
By

JEFFREY H MARSH
LICENSE
No 70018
STATE OF FLORIDA
PROFESSIONAL ENGINEER
10/5/2011

GLASS COMPANY
1101 13TH STREET WEST RIVIERA BEACH, FLORIDA 33404
PH. (561) 863-7078 FAX (561) 863-7088
www.trainorglass.com
TRAINOR
ILLINOIS FLORIDA GEORGIA NEW JERSEY COLORADO TEXAS ARIZONA VIRGINIA MARYLAND
DESIGN ENGINEERING & CONSULTING

NO.	DATE	BY	REVISIONS

Date	Scale
3-3-11	HALF

Drawing No 4326438

Drawing Title
113 PSF LARGE MISSILE IMPACT MULLION CHART

Sheet No 8 / 44

Multi-Span w/ Stack Horizontal Application and Support Reactions (lbf)

WL (+/-) = 113 psf

	Mull Type 1	Jamb Type 3	Jamb Type 4	Corner Type 5	Corner Type 6
M_T	L / R	L / R	L / R	L / R	L / R
3'-0"	14'-0" / 15'-0"	14'-0" / 15'-0"	14'-0" / 15'-0"	14'-0" / 15'-0"	14'-0" / 15'-0"
R_S	2093	1046	1046	1480	1480
R_M	5428	2714	2714	3838	3838
R_H	2242	1121	1121	1585	1585
D	570	208	285	570	570
3'-6"	14'-0" / 15'-0"	14'-0" / 15'-0"	14'-0" / 15'-0"	14'-0" / 15'-0"	14'-0" / 15'-0"
R_S	2442	1221	1221	1726	1726
R_M	6332	3166	3166	4477	4477
R_H	2616	1308	1308	1850	1850
D	665	242	333	665	665
4'-0"	14'-0" / 15'-0"	14'-0" / 15'-0"	14'-0" / 15'-0"	14'-0" / 15'-0"	14'-0" / 15'-0"
R_S	2790	1395	1395	1973	1973
R_M	7237	3618	3618	5117	5117
R_H	2990	1495	1495	2114	2114
D	760	277	380	760	760
4'-6"	14'-0" / 15'-0"	14'-0" / 15'-0"	14'-0" / 15'-0"	14'-0" / 15'-0"	14'-0" / 15'-0"
R_S	3139	1570	1570	2220	2220
R_M	8141	4071	4071	5757	5757
R_H	3363	1682	1682	2378	2378
D	855	312	428	855	855
5'-0"	14'-0" / 15'-0"	14'-0" / 15'-0"	14'-0" / 15'-0"	14'-0" / 15'-0"	14'-0" / 15'-0"
R_S	3488	1744	1744	2466	2466
R_M	9046	4523	4523	6396	6396
R_H	3737	1869	1869	2642	2642
D	950	346	475	950	950

1

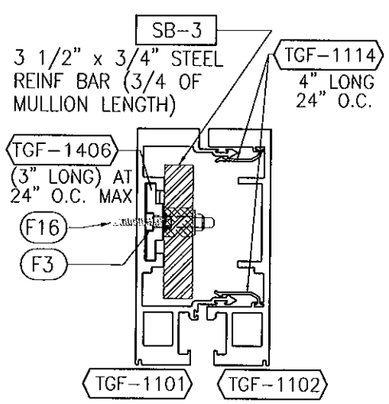

1 MULLION TYPE #1
TGF-1101 AND TGF-1102
(WITHOUT REINFORCING)
ALUMINUM Ixx = 39.776 IN^4
Sxx = 10.164 IN^3

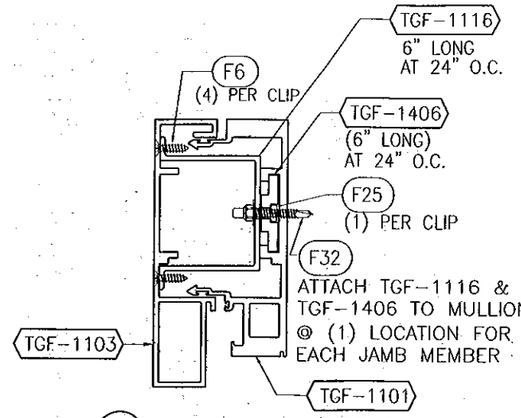

3 MULLION (JAMB) TYPE #3
TGF-1101 AND TGF-1103/TGF-1116
(WITHOUT REINFORCING)
ALUMINUM Ixx = 27.956 IN^4
Sxx = 8.404 IN^3

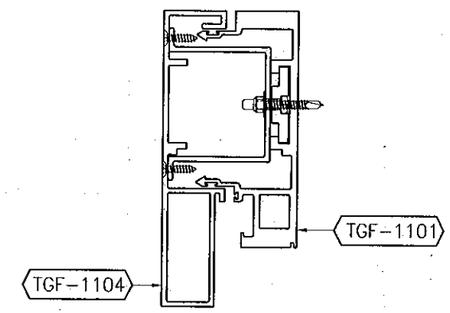

4 MULLION (JAMB) TYPE #4
TGF-1101 AND TGF-1103/TGF-1116
(WITHOUT REINFORCING)
ALUMINUM Ixx = 30.986 IN^4
Sxx = 8.907 IN^3

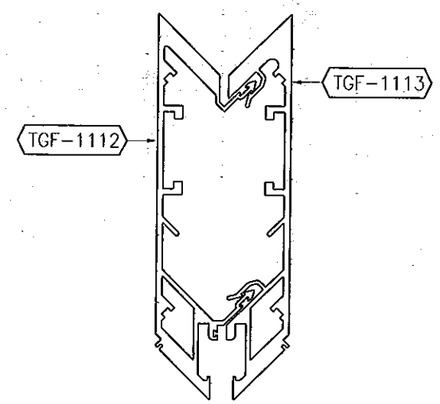

5 CORNER MULLION TYPE #5
TGF-1112 AND TGF-1113
(WITHOUT REINFORCING)
ALUMINUM Ixx = 91.202 IN^4
Sxx = 17.443 IN^3

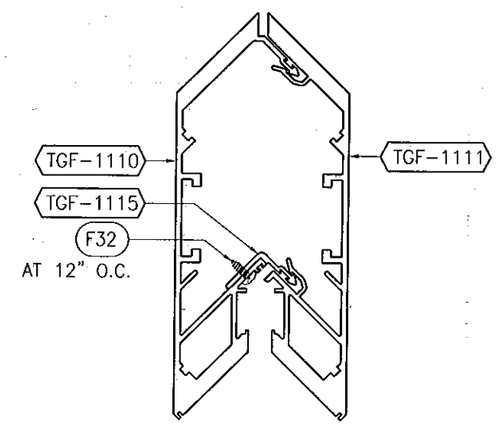

6 CORNER MULLION TYPE #6
TGF-1110 AND TGF-1111
(WITHOUT REINFORCING)
ALUMINUM Ixx = 103.923 IN^4
Sxx = 18.06 IN^3

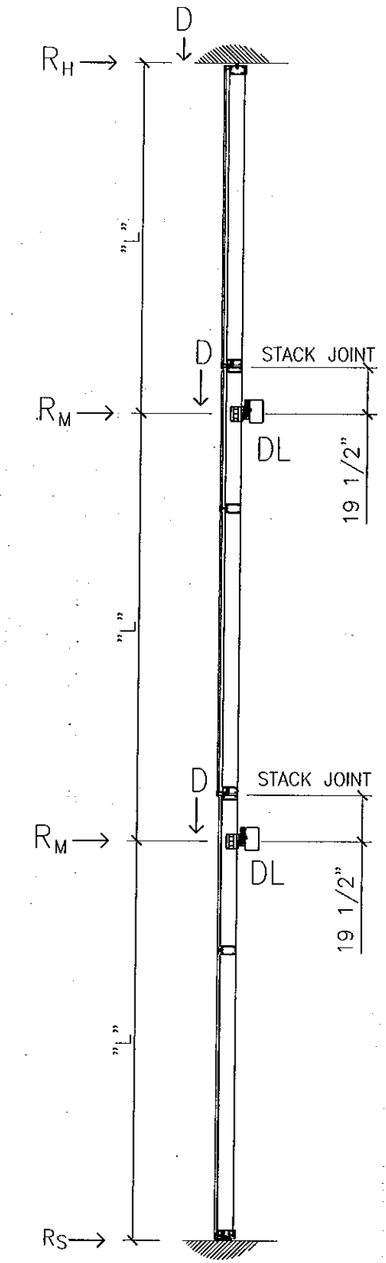

GENERAL NOTES:

- L = DISTANCE BETWEEN ANCHOR POINTS
- R_H = MAXIMUM REACTION AT HEAD ANCHOR
- R_M = MAXIMUM REACTION AT MIDSPAN ANCHOR
- R_S = MAXIMUM REACTION AT SILL ANCHOR
- D = MAXIMUM DEAD LOAD REACTION
- DL = DEAD LOAD ANCHOR POINT
- WL = WIND LOAD ANCHOR POINT
- FOR MULTIPLE SPAN MAXIMUM DEFLECTION = L/180 OR 1" (WHICHEVER IS LESS)
- SPANS ARE LIMITED BY MAXIMUM TESTED END REACTIONS

FOR MIAMI-DADE CO. B.C.C.O.

Approved as complying with the Florida Building Code
Date 10/20/2011
NOA# 11-0401.06
Miami-Dade Product Control
By

JEFFREY H MARSH
LICENSE
No 70018
STATE OF FLORIDA
PROFESSIONAL ENGINEER
10/5/2011

GLASS COMPANY
1101 13TH STREET WEST RIVIERA BEACH, FLORIDA 33404
PH. (561) 863-7078 FAX (561) 863-7088
www.trainorglass.com
TRAINOR
ILLINOIS FLORIDA GEORGIA NEW JERSEY COLORADO TEXAS ARIZONA VIRGINIA MARYLAND

REVISIONS

NO.	DATE	BY	
1	4/22/11	BC	REVISED WALL Ø - SEE SHEET
2			
3			
4			
5			
6			

DESIGN ENGINEERING & CONSULTING Inc.
2205 N. COLLINS BLVD. - SUITE 130 RICHARDSON, TEXAS 75080
PH: 972-644-0646 FAX: 972-644-0264

Date	Scale
3-3-11	QUARTER

Drawing No: 4326438

Drawing Title: 113 PSF LARGE MISSILE IMPACT MULLION CHART

Sheet No: 9 /44

PERIMETER SEALANT OPTIONS

DOW CORNING 790 SILICONE
DOW CORNING 791 SILICONE
DOW CORNING 795 SILICONE
TREMCO SPECTRUM 2

ALTERNATE PERIMETER SEALANT TYPES AND JOINT SIZES SHALL BE DESIGNED AND APPROVED BY DESIGN PROFESSIONAL OF RECORD AND/OR THE SEALANT MANUFACTURER.

NOTE:
SEE SHEET 21 FOR ANCHORAGE CONDITIONS

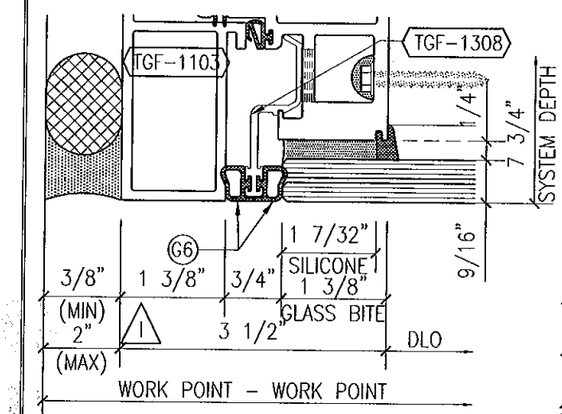

1 SSG JAMB MULLION
w/ 9/16" GLASS

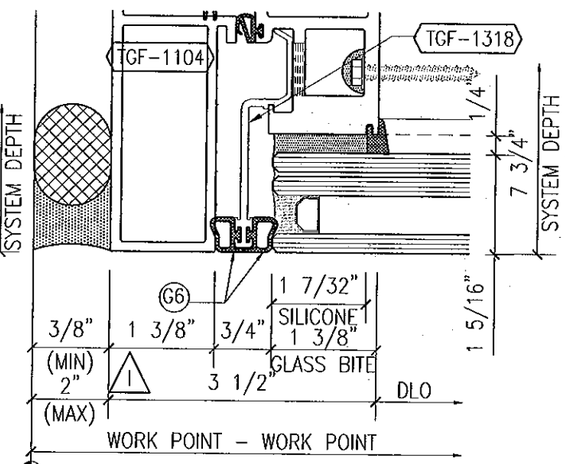

1 SSG JAMB MULLION
w/ 1 5/16" GLASS

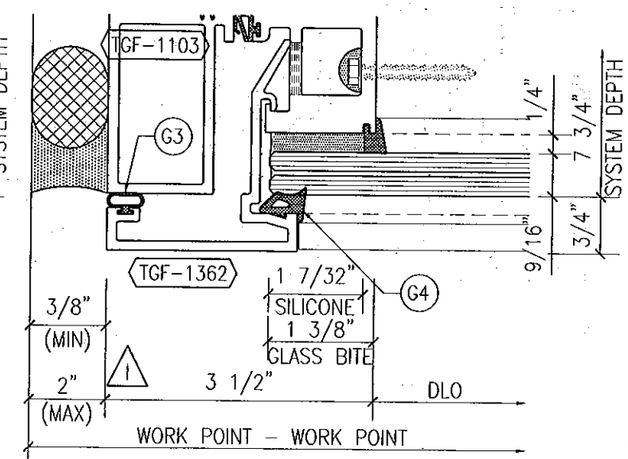

1 LEFT JAMB MULLION
w/ 9/16" GLASS

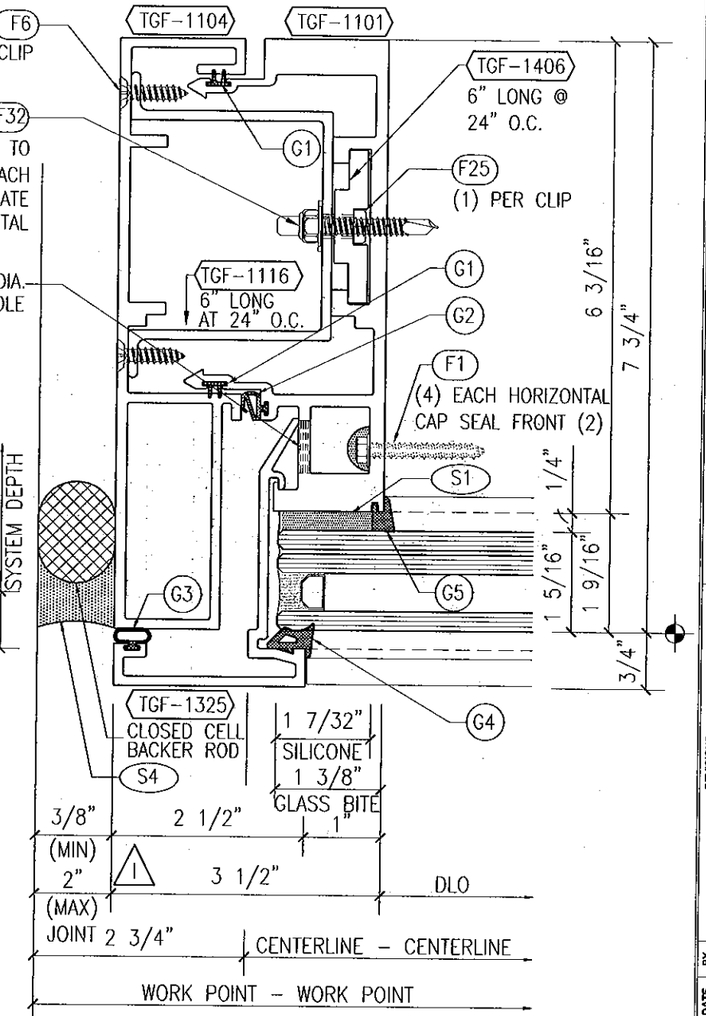

1 LEFT JAMB MULLION
w/ 1 5/16" GLASS

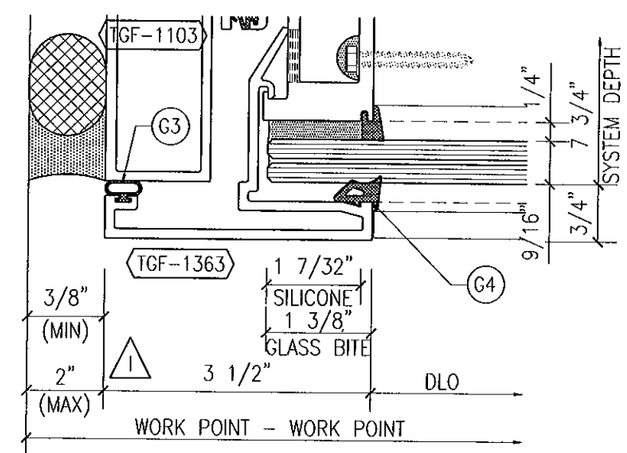

1 LEFT JAMB MULLION
w/ 9/16" GLASS & 3 1/2" FACE CAP

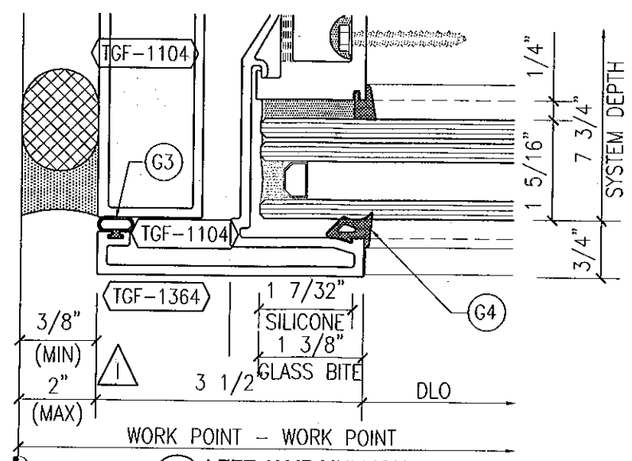

1 LEFT JAMB MULLION
w/ 1 5/16" GLASS & 3 1/2" FACE CAP

FOR MIAMI-DADE CO. B.C.C.O.

Approved as complying with the Florida Building Code
Date 10/20/2011
NOA# 11-0401.06
Miami-Dade Product Control
By

JEFFREY H MARSH
LICENSE
No 70018
STATE OF
FLORIDA
PROFESSIONAL ENGINEER
10/5/2011

GLASS COMPANY
1101 13TH STREET WEST RIVIERA BEACH, FLORIDA 33404
PH. (561) 863-7078 FAX (561) 863-7088
www.trainorglass.com
TRAINOR
ILLINOIS FLORIDA GEORGIA NEW JERSEY COLORADO TEXAS ARIZONA VIRGINIA MARYLAND

REVISIONS

NO.	DATE	BY	DESC.
1	9/14/11		UPDATED MAC JOINT DETAIL
2			
3			
4			
5			

DESIGN ENGINEERING & CONSULTING Inc.
3306 N. COLLINS BLVD. - SUITE 130 RICHARDSON, TEXAS 75080
PH. 972-644-4040 FAX 972-644-4006

Date	Scale
3-3-11	HALF

Drawing No
4326438

Drawing Title
113 PSF
LARGE MISSILE IMPACT
DETAILS

Sheet No
10 /44

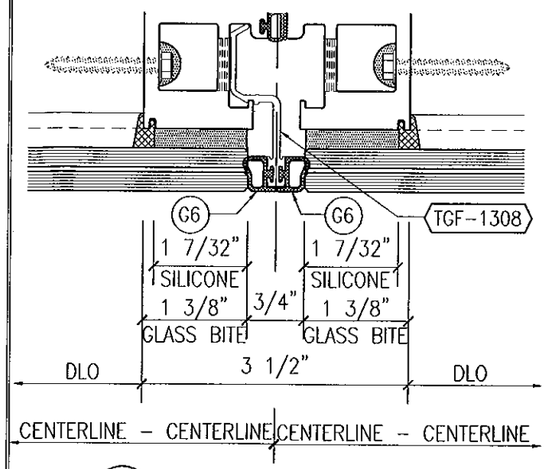

1 **SSG INTERMEDIATE MULLION**
w/ 1 5/16" THICK GLASS

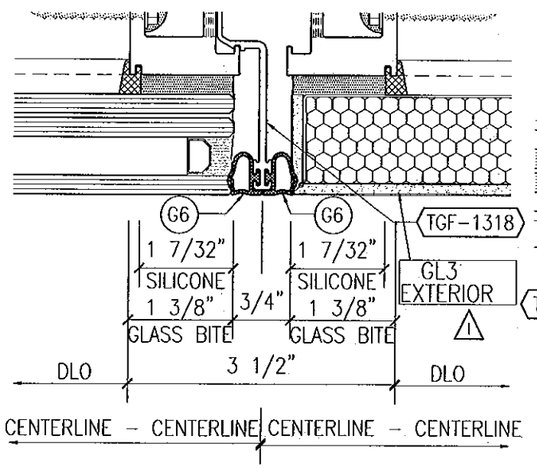

1 **SSG INTERMEDIATE MULLION**
w/ 1 5/16" THICK GLASS OR COMPOSITE PANEL

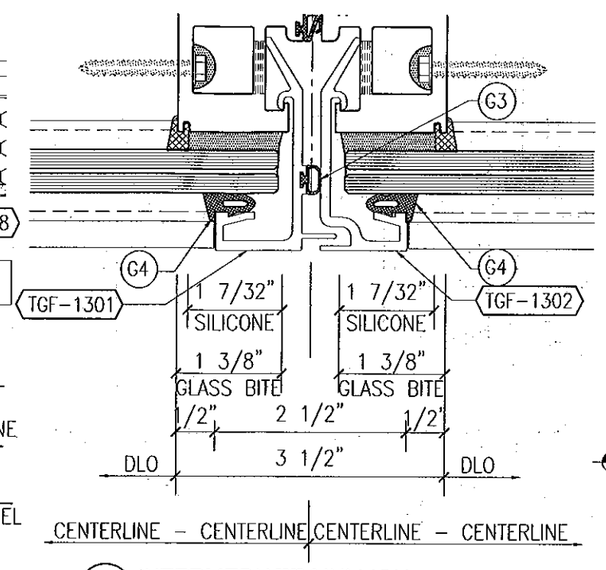

1 **INTERMEDIATE MULLION**
w/ 9/16" THICK GLASS & 2 1/2" FACE CAP

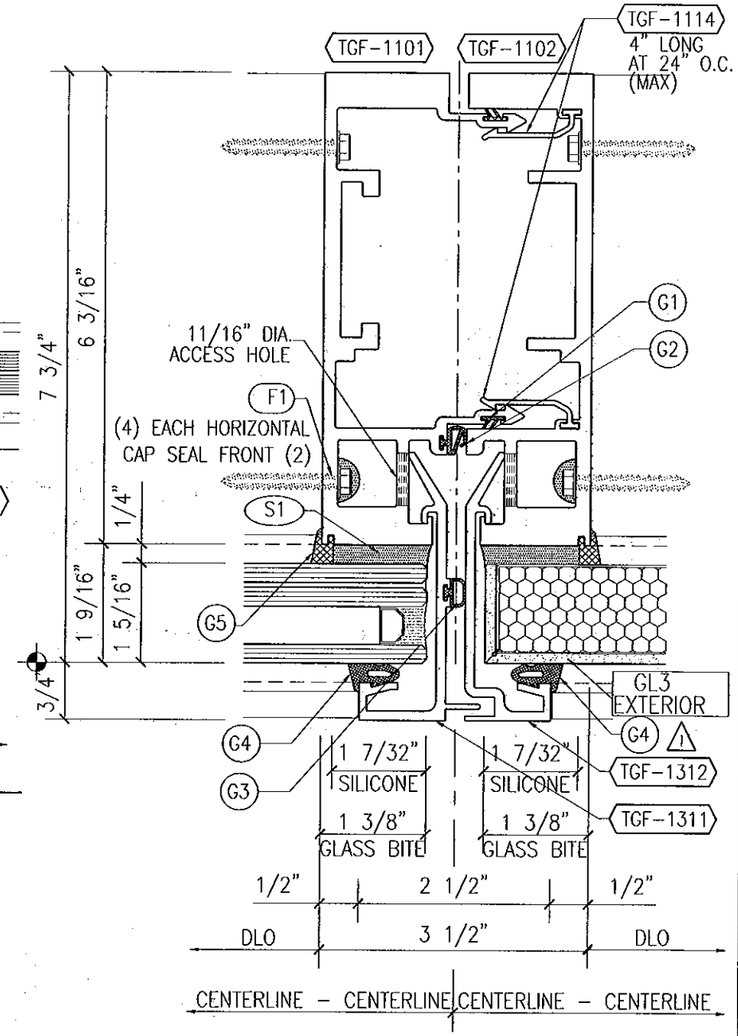

1 **INTERMEDIATE MULLION**
w/ 1 5/16" THICK GLASS OR COMPOSITE PANELS

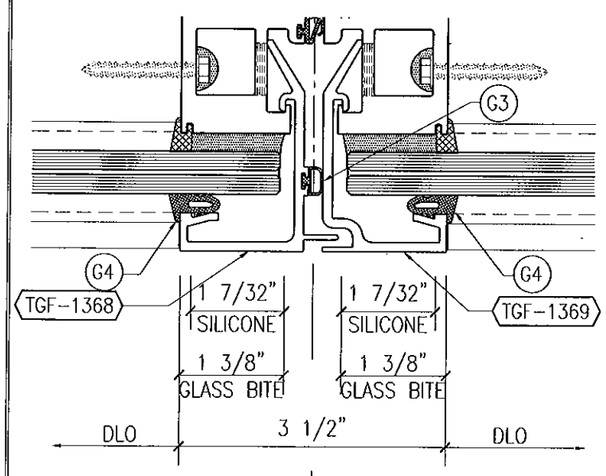

1 **INTERMEDIATE MULLION**
w/ 9/16" THICK GLASS & 3 1/2" FACE CAP

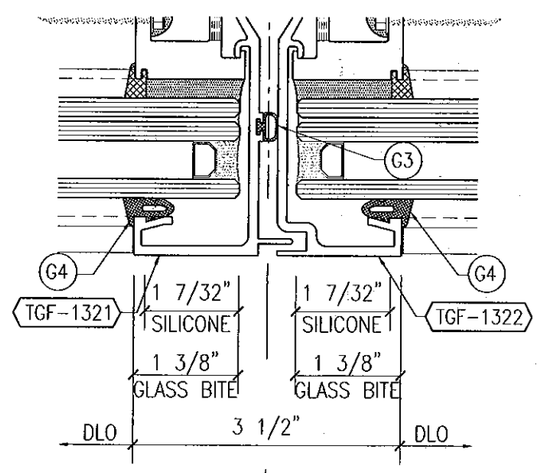

1 **INTERMEDIATE MULLION**
w/ 1 5/16" THICK GLASS & 3 1/2" FACE CAP

NOTE:
SEE SHEET 22 FOR
ANCHORAGE CONDITIONS

FOR MIAMI-DADE CO. B.C.C.O.

Approved as complying with the
Florida Building Code
Date 10/20/2011
NOA# 11-0401.06
Miami Dade Product Control
By

JEFFREY H MARSH
LICENSE
No 70018
STATE OF
FLORIDA
PROFESSIONAL ENGINEER
10/5/2011

GLASS COMPANY
1101 13TH STREET WEST RIVIERA BEACH, FLORIDA 33404
PH. (561) 863-7078 FAX (561) 863-7088
www.trainorglass.com
TRAINOR
ILLINOIS FLORIDA GEORGIA NEW JERSEY COLORADO TEXAS ARIZONA VIRGINIA MARYLAND

REVISIONS

NO.	DATE	BY	DESCRIPTION
1	10/05/11		ADDED NOTE FOR GL3 EXTERIOR
2			
3			
4			
5			

DESIGN ENGINEERING & CONSULTING Inc.
3005 N. FRUITVILLE BLVD. SUITE 100 DENISON, TEXAS 75020
PH. 972-544-3544 FAX 972-544-4584

Date	Scale
3-3-11	HALF

Drawing No
4326438

Drawing Title
113 PSF
LARGE MISSILE IMPACT
DETAILS

Sheet No
11 / 44

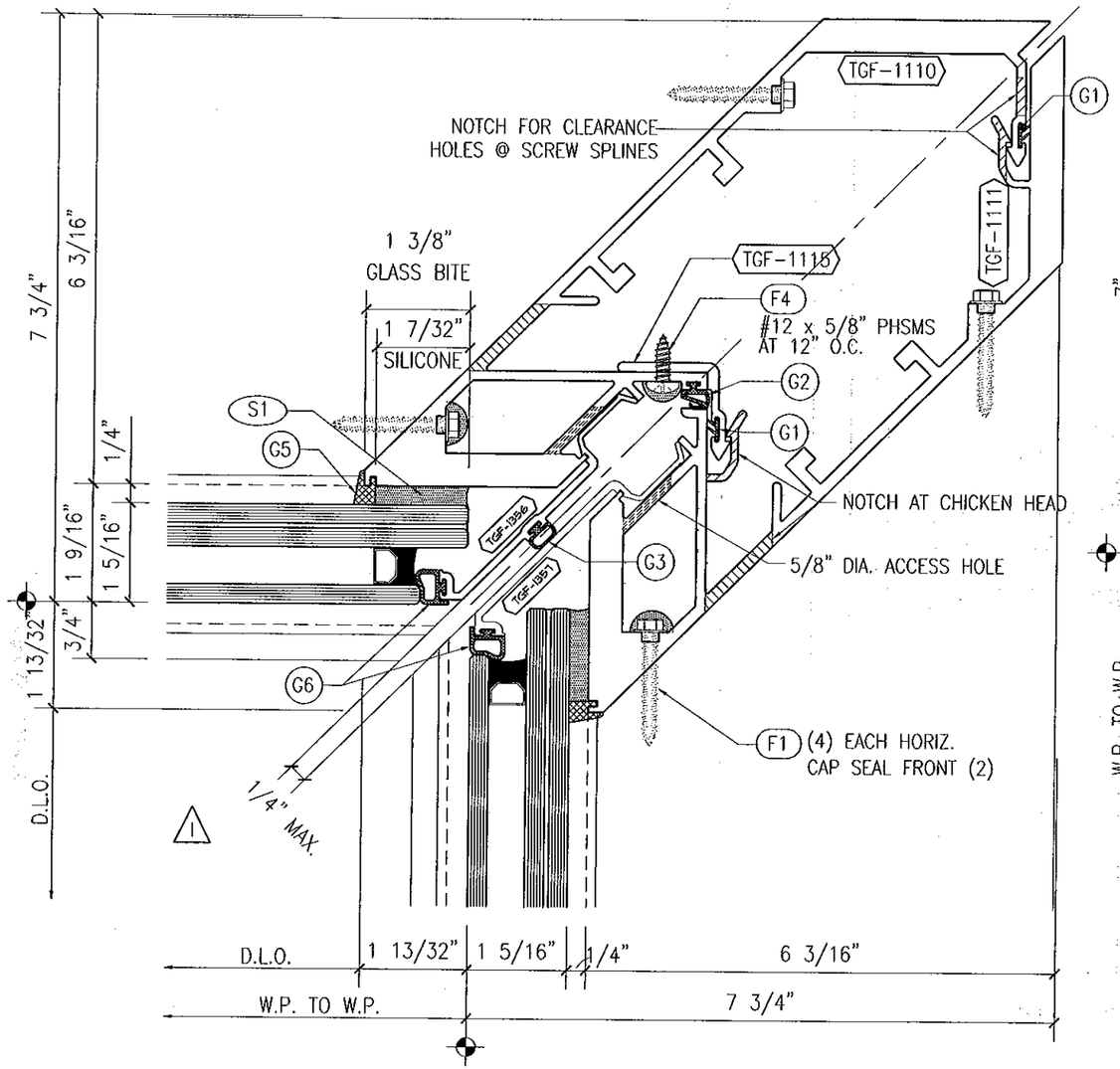

1 90 I.S. CORNER MULLION
w/ 1 5/16" THICK GLASS

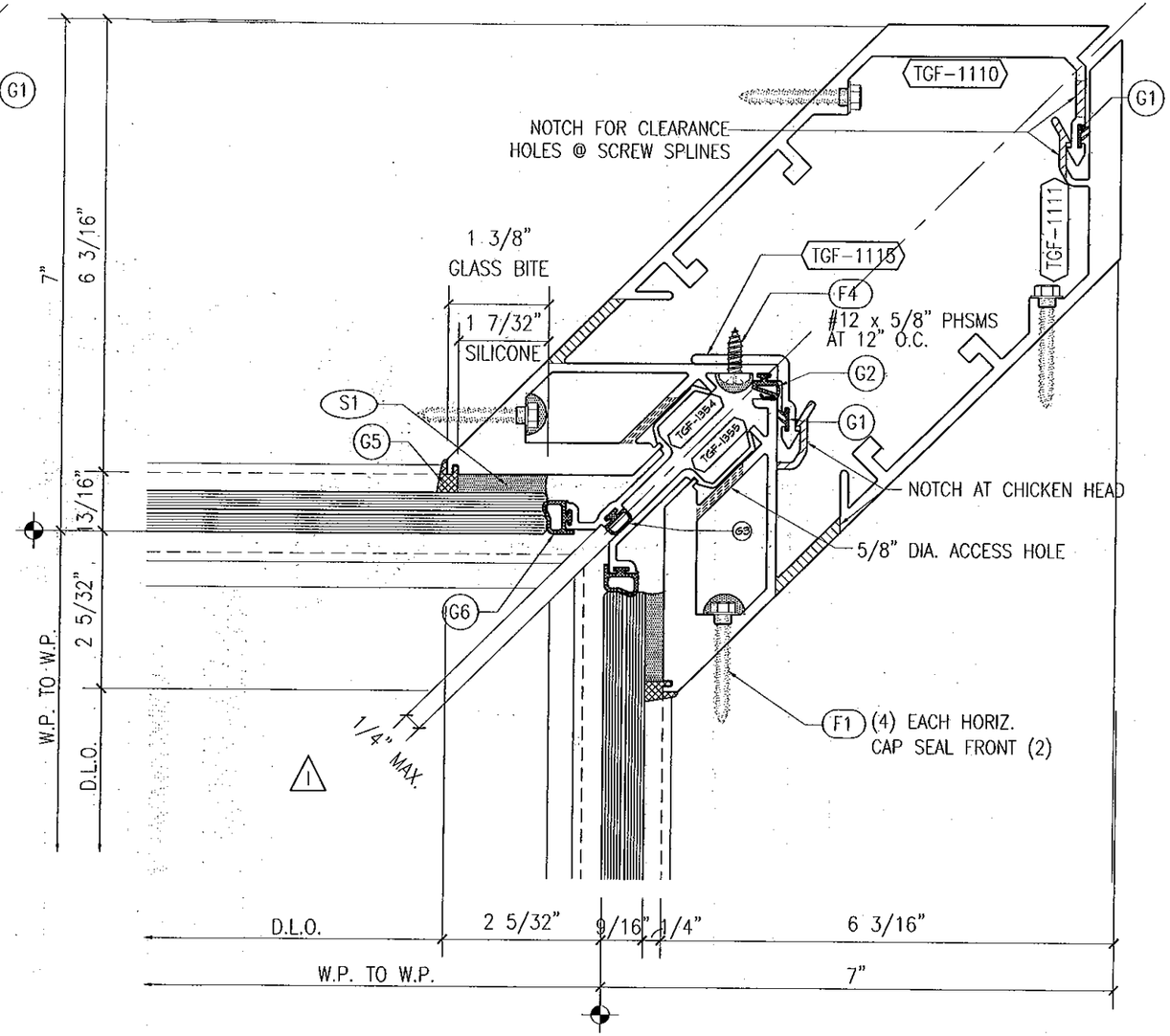

2 90 I.S. CORNER MULLION
w/ 9/16" THICK GLASS

NOTE:
SEE SHEET 23 FOR
ANCHORAGE CONDITIONS

FOR MIAMI-DADE CO. B.C.C.O.

Approved as complying with the
Florida Building Code
Date 10/20/2011
NOA# 11-0401.06
Miami-Dade Product Control
By

JEFFREY H MARSH
LICENSE
No 70018
STATE OF
FLORIDA
PROFESSIONAL ENGINEER
10/5/2011

GLASS COMPANY
1101 13TH STREET WEST RIVIERA BEACH, FLORIDA 33404
PH. (561) 863-7078 FAX (561) 863-7088
www.trainorglass.com
TRAINOR
ILLINOIS FLORIDA GEORGIA NEW JERSEY COLORADO TEXAS ARIZONA VIRGINIA MARYLAND

REVISIONS

NO.	DATE	BY	DEC
1	9/22/11		ADDED 1/4" MAX. CORNER AT RM
2			
3			
4			
5			
6			

DESIGN ENGINEERING & CONSULTING Inc
2905 N. COLLINS BLVD. • SUITE 100 RICHARDSON, TEXAS 75080
TEL 972-644-0646 FAX 972-644-4204

Date	Scale
3-3-11	HALF

Drawing No
4326438

Drawing Title
113 PSF
LARGE MISSILE IMPACT
DETAILS

Sheet No
12 /44

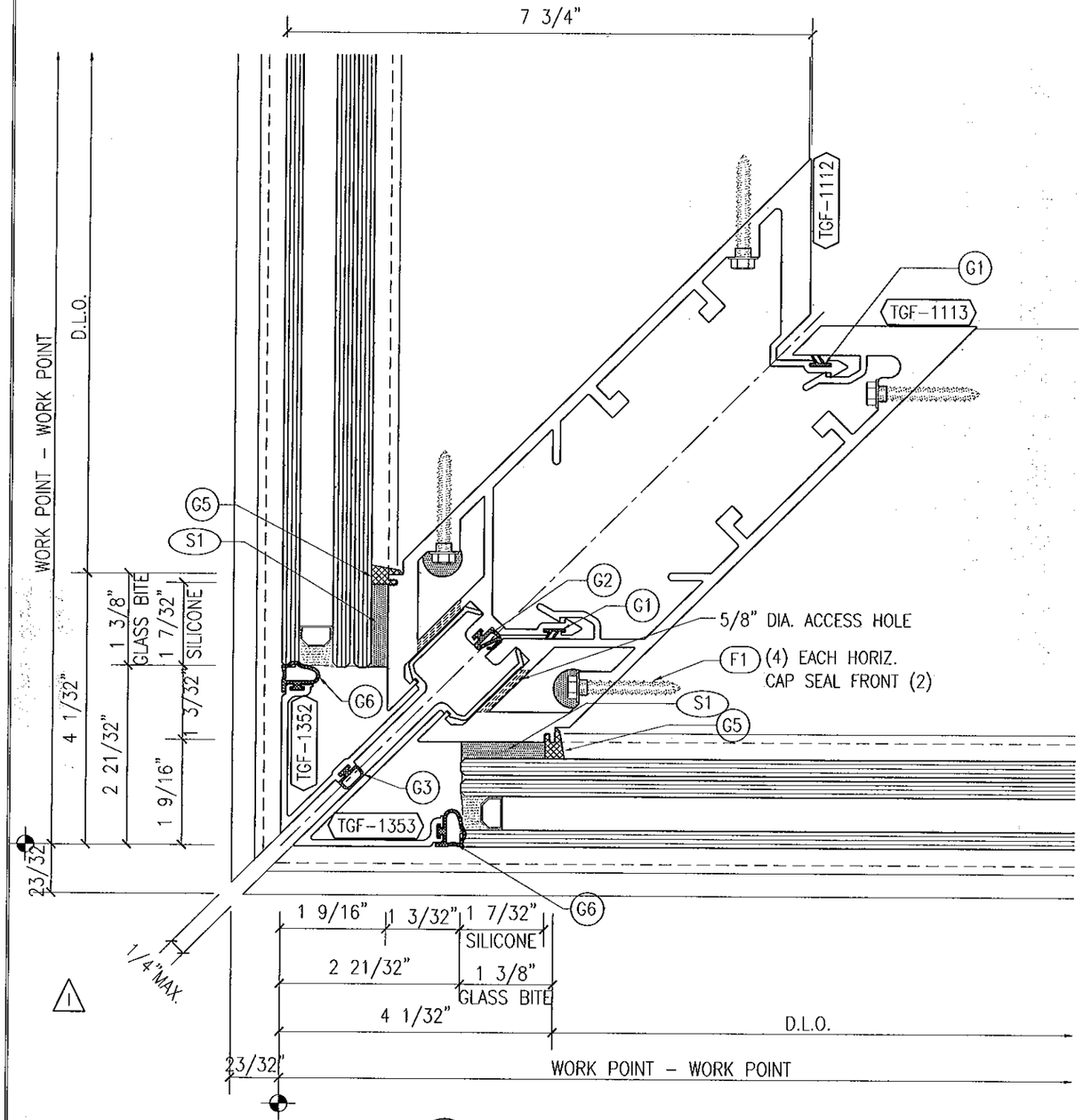

1 90 O.S. CORNER MULLION
w/ 1 5/16" THICK GLASS

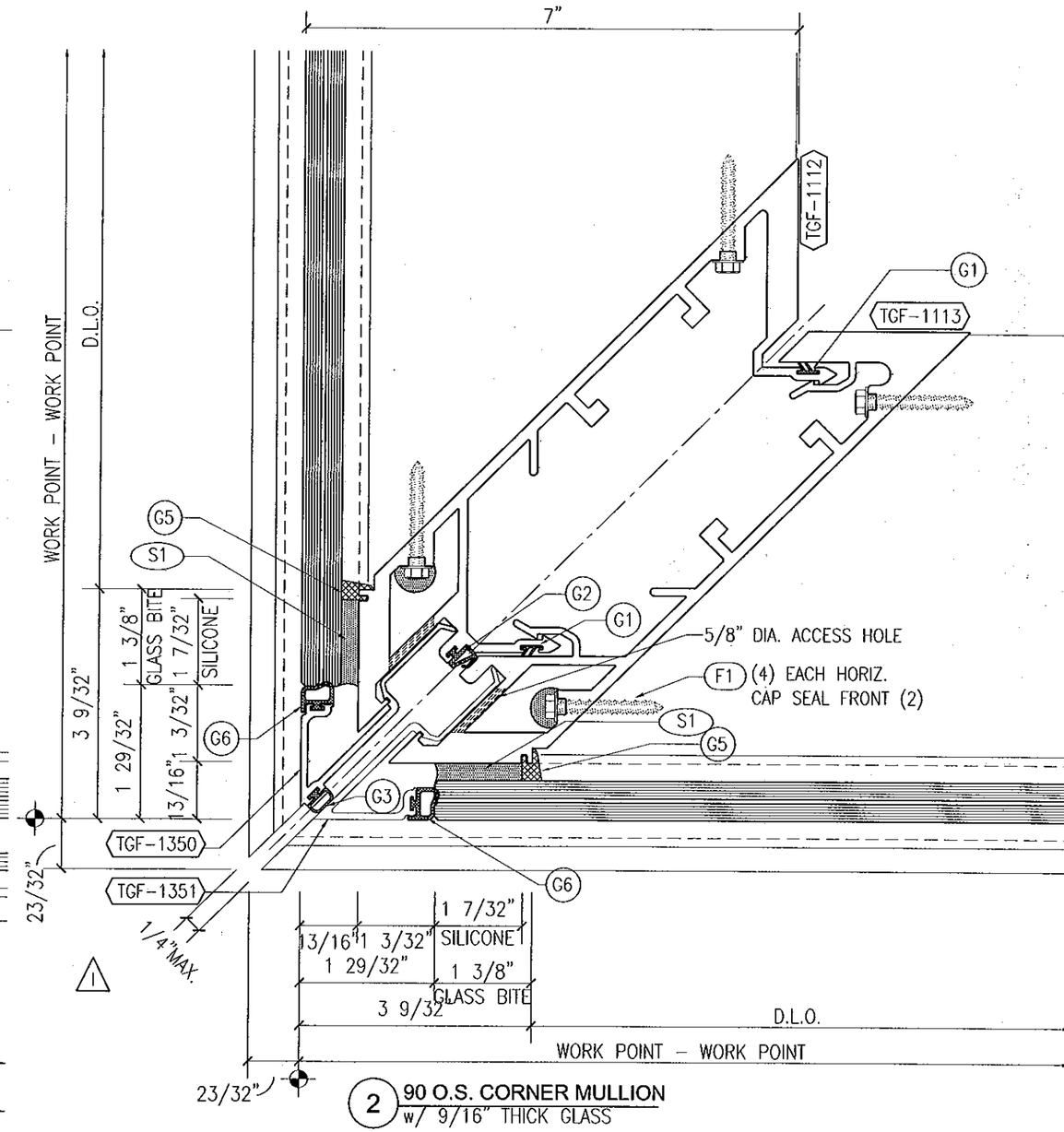

2 90 O.S. CORNER MULLION
w/ 9/16" THICK GLASS

NOTE:
SEE SHEET 24 & 25 FOR ANCHORAGE CONDITIONS

FOR MIAMI-DADE CO. B.C.C.O.

Approved as complying with the Florida Building Code
Date 10/20/2011
NOA# 11-0401.06
Miami-Dade Product Control
By

JEFFREY H MARSH
LICENSE
No 70018
STATE OF
FLORIDA
PROFESSIONAL ENGINEER
10/5/2011

GLASS COMPANY
1101 13TH STREET WEST RIVIERA BEACH, FLORIDA 33404
PH. (561) 863-7078 FAX (561) 863-7086
www.trainorglass.com
TRAINOR
ILLINOIS FLORIDA GEORGIA NEW JERSEY COLORADO TEXAS ARIZONA VIRGINIA MARYLAND

NO.	DATE	BY	REVISIONS
1	9/22/11	BES	ADDED 1/4" MIN. CORNER AT ⊕
2			
3			
4			
5			
6			

DESIGN ENGINEERING & CONSULTING Inc.
2306 N. COLLINS BLVD. – SUITE 130 TEL 972-444-9640
RICHARDSON, TEXAS 75080 FAX 972-444-4386

Date	Scale
3-3-11	HALF

Drawing No
4326438

Drawing Title
113 PSF
LARGE MISSILE IMPACT DETAILS

Sheet No
13 /44

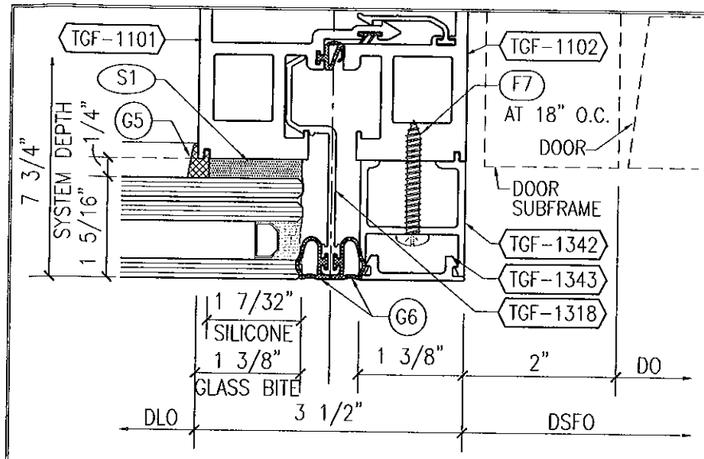

1 SSG DOOR JAMB w/ SIDE LITE
w/ 1 5/16" THICK GLASS

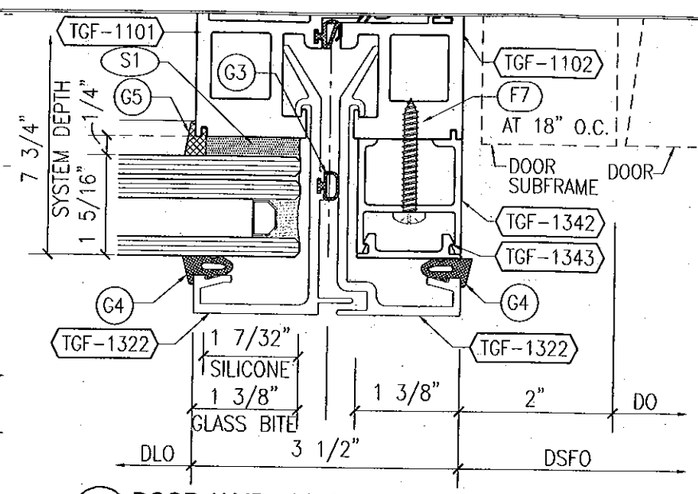

1 DOOR JAMB w/ SIDE LITE
w/ 1 5/16" THICK GLASS & 3 1/2" FACE CAPS

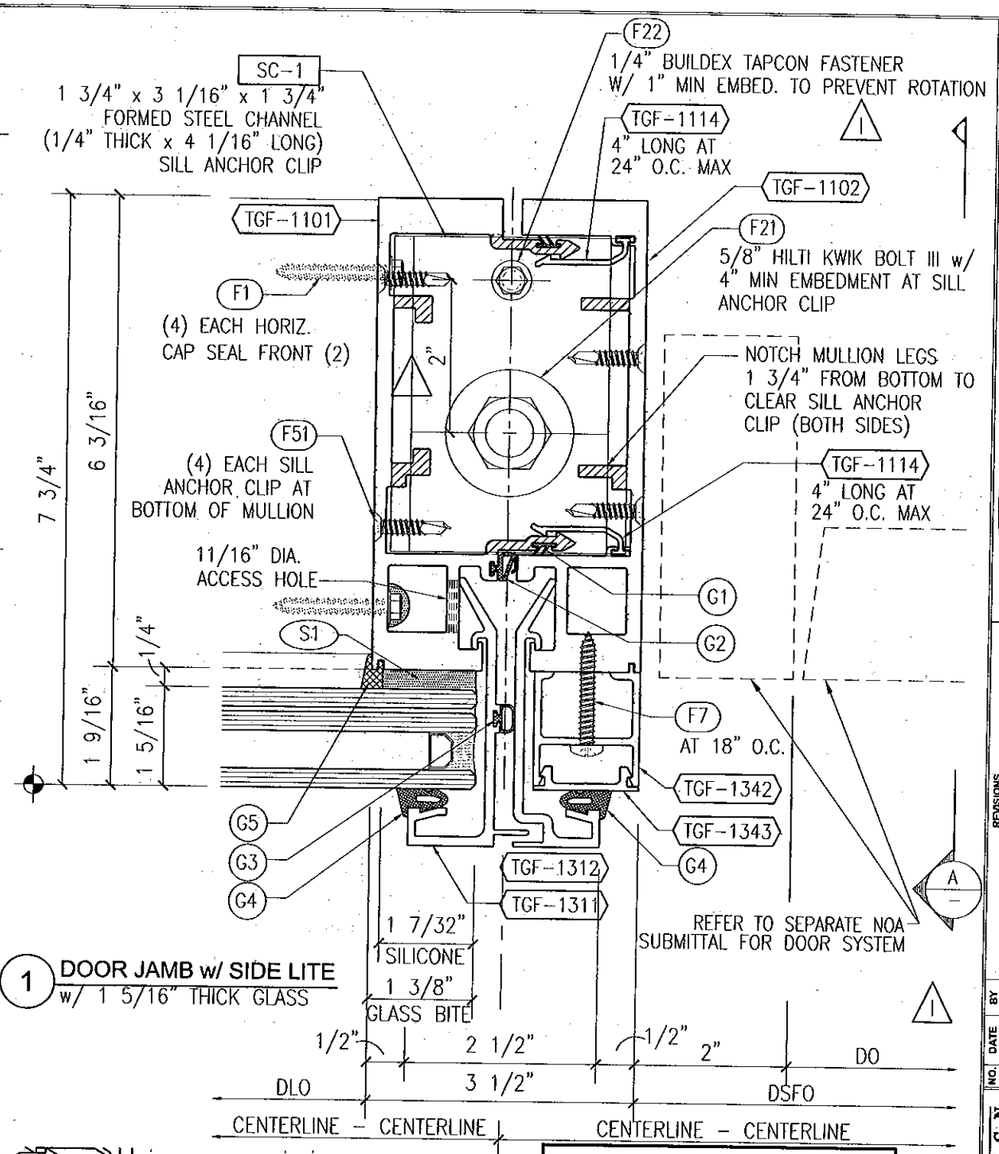

1 DOOR JAMB w/ SIDE LITE
w/ 1 5/16" THICK GLASS

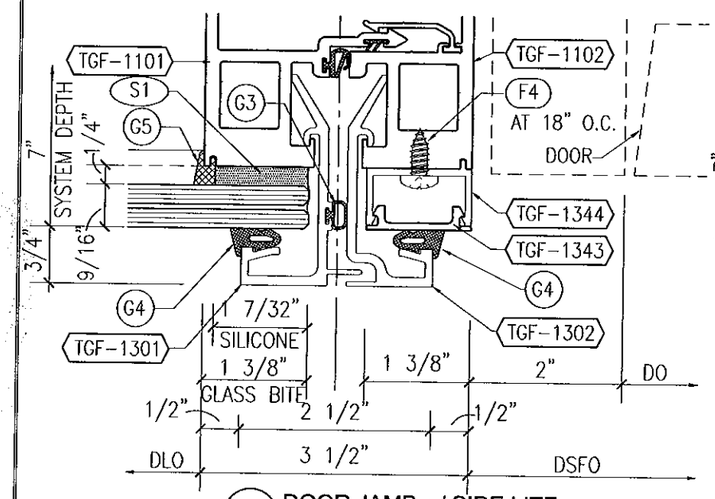

1 DOOR JAMB w/ SIDE LITE
w/ 9/16" THICK GLASS

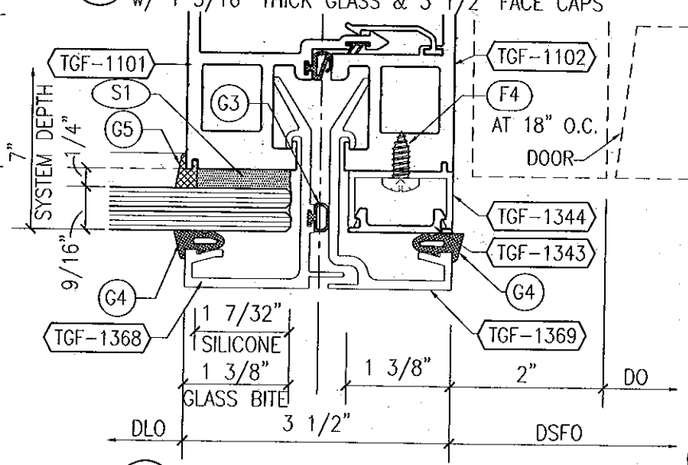

1 DOOR JAMB w/ SIDE LITE
w/ 9/16" THICK GLASS & 3 1/2" FACE CAPS

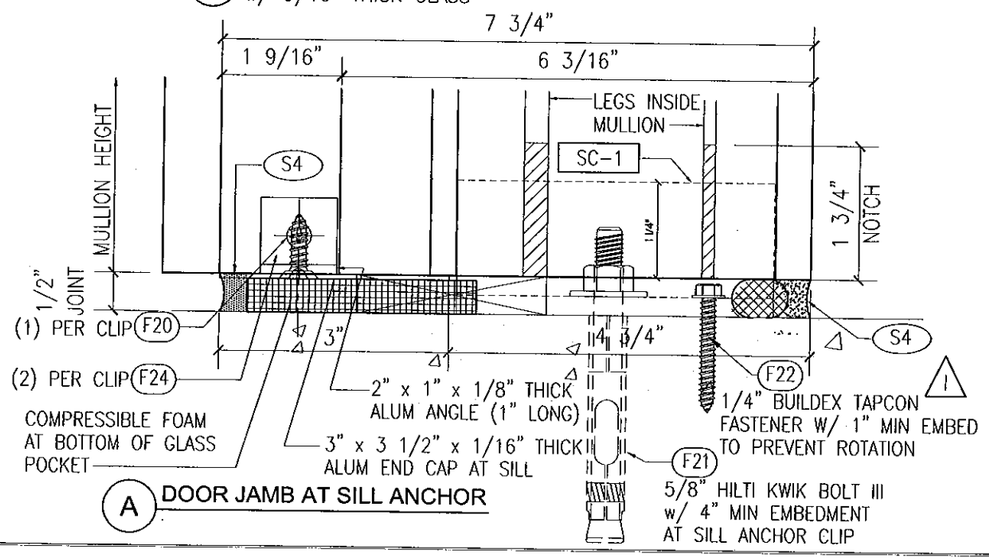

A DOOR JAMB AT SILL ANCHOR

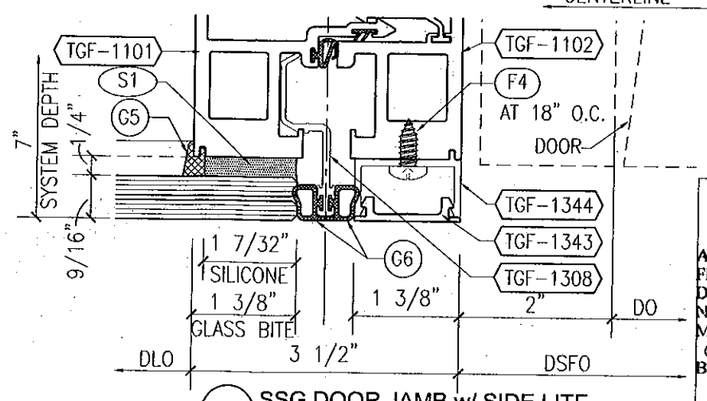

1 SSG DOOR JAMB w/ SIDE LITE
w/ 9/16" THICK GLASS

NOTE:

STEEL REINF. REQ'D AT DOOR JAMB MULLIONS NOT SHOWN FOR CLARITY (SEE SINGLE-SPAN MULLION CHART)

FOR MIAMI-DADE CO. B.C.C.O.

Approved as complying with the Florida Building Code
Date 10/20/2011
NOA# 11-0401.06
Miami-Dade Product Control
By

JEFFREY H MARSH
LICENSE
No 70018
STATE OF
FLORIDA
PROFESSIONAL ENGINEER
10/5/2011

TRAINOR GLASS COMPANY
1101 13TH STREET WEST RIVIERA BEACH, FLORIDA 33404
PH. (561) 863-7078 FAX (561) 863-7088
www.trainorglass.com
ILLINOIS FLORIDA GEORGIA NEW JERSEY COLORADO TEXAS ARIZONA VIRGINIA MARYLAND

DESIGN ENGINEERING & CONSULTING Inc

NO.	DATE	BY	REVISIONS
1	9/20/11		UPDATED NOTE FOR SEPARATE NOA FOR DOOR SYSTEM AND 1/4" TAPCON ANCHOR INFORMATION

Date	Scale
3-3-11	HALF

Drawing No 4326438

Drawing Title
113 PSF LARGE MISSILE IMPACT DETAILS

Sheet No 14 /44

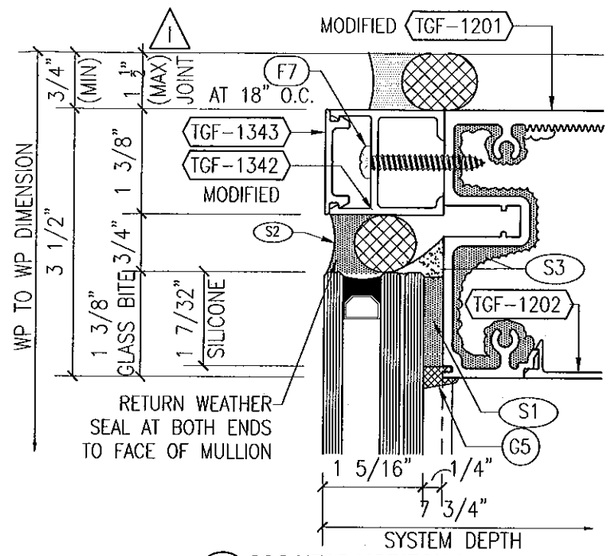

1 SSG HEAD HORIZONTAL
w/ 1 5/16" THICK GLASS

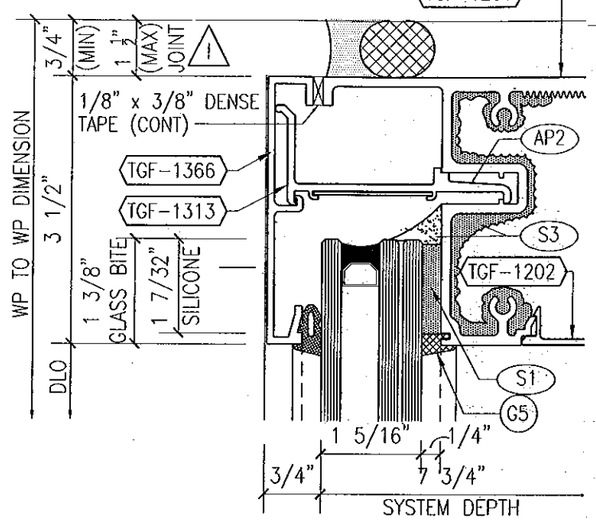

1 HEAD HORIZONTAL
w/ 1 5/16" THICK GLASS & 3 1/2" FACE CAP

NOTE:
SEE SHEETS 26 & 27 FOR ANCHORAGE CONDITIONS

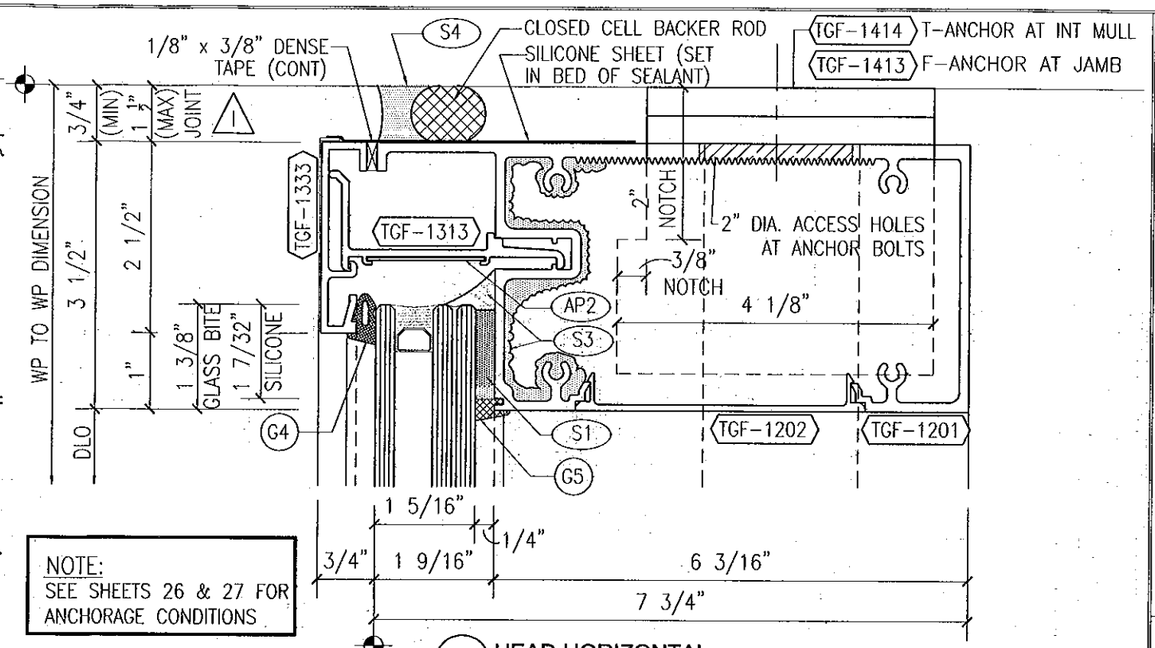

1 HEAD HORIZONTAL
w/ 1 5/16" THICK GLASS

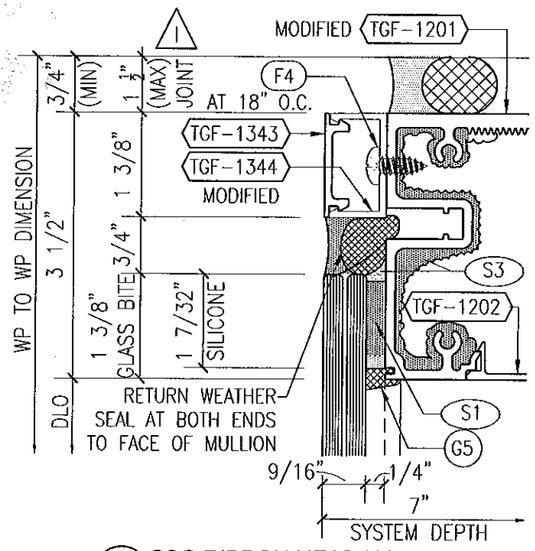

1 SSG RIBBON HEAD HORIZONTAL
w/ 9/16" THICK GLASS

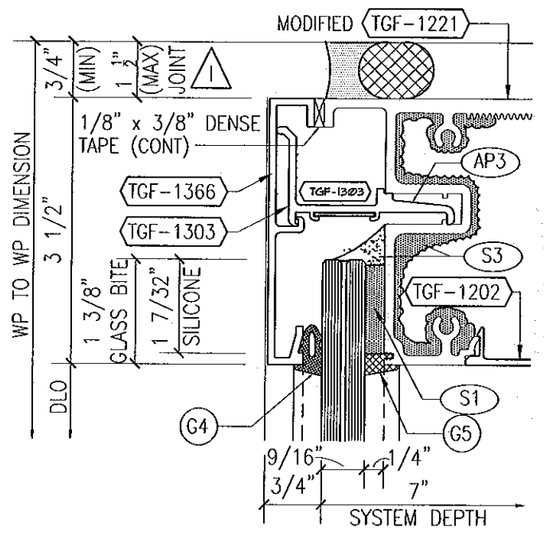

1 HEAD HORIZONTAL
w/ 9/16" THICK GLASS & 3 1/2" FACE CAP

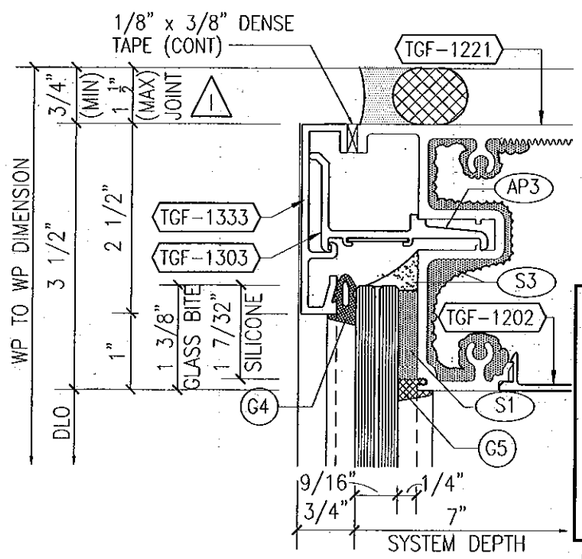

1 HEAD HORIZONTAL
w/ 9/16" THICK GLASS

PERIMETER SEALANT OPTIONS

DOW CORNING 790 SILICONE
DOW CORNING 791 SILICONE
DOW CORNING 795 SILICONE
TREMCO SPECTRUM 2

ALTERNATE PERIMETER SEALANT TYPES AND JOINT SIZES SHALL BE DESIGNED AND APPROVED BY DESIGN PROFESSIONAL OF RECORD AND/OR THE SEALANT MANUFACTURER.

FOR MIAMI-DADE CO. B.C.C.O.

Approved as complying with the Florida Building Code
Date 10/20/2011
NOA# 11-0401.06
Miami Dade Product Control
By

JEFFREY H MARSH
LICENSE
No 70018
STATE OF
FLORIDA
PROFESSIONAL ENGINEER
10/5/2011

TRAINOR GLASS COMPANY
1101 13TH STREET WEST RIVIERA BEACH, FLORIDA 33404
PH. (561) 863-7078 FAX (561) 863-7088
www.trainorglass.com
ILLINOIS FLORIDA GEORGIA NEW JERSEY COLORADO TEXAS ARIZONA VIRGINIA MARYLAND

NO.	DATE	BY	REVISIONS
1	10/06/11	BC	UPDATED MIS. JOINT SIZE

DESIGN ENGINEERING & CONSULTING Inc
2200 N. COLLINS BLVD., - SUITE 130 RICHARDSON, TEXAS 75080
PH. 972-644-5044 FAX 972-644-6284

Date	Scale
3-3-11	HALF

Drawing No
4326438

Drawing Title
113 PSF
LARGE MISSILE IMPACT DETAILS

Sheet No
15 / 44

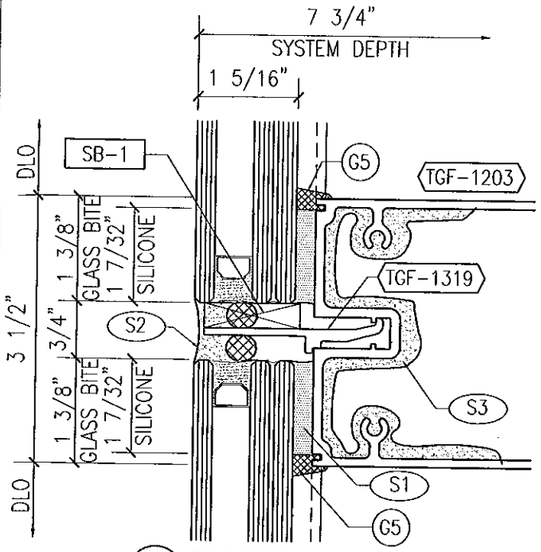

1 SSG INT HORIZONTAL
w/ 1 5/16" THICK GLASS

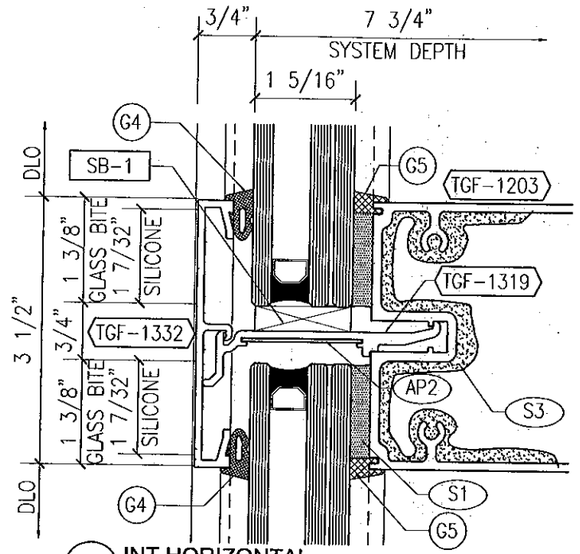

1 INT HORIZONTAL
w/ 1 5/16" GLASS & 3 1/2" FACE CAP

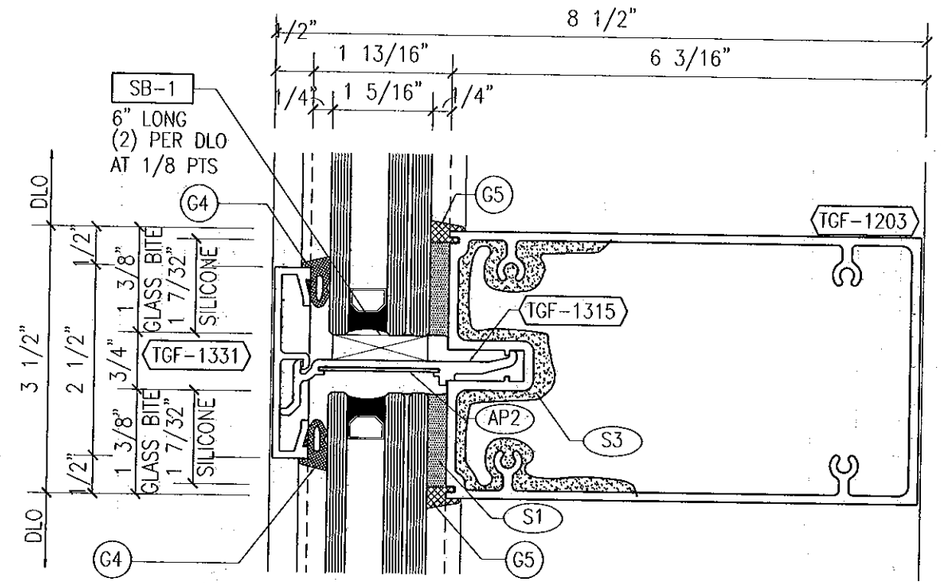

BUTT INTO VERT. GASKET
BUNCH @ CENTER OF DLO
SO GASKET IS ON COMP.

1 INTERMEDIATE HORIZONTAL
w/ 1 5/16" GLASS

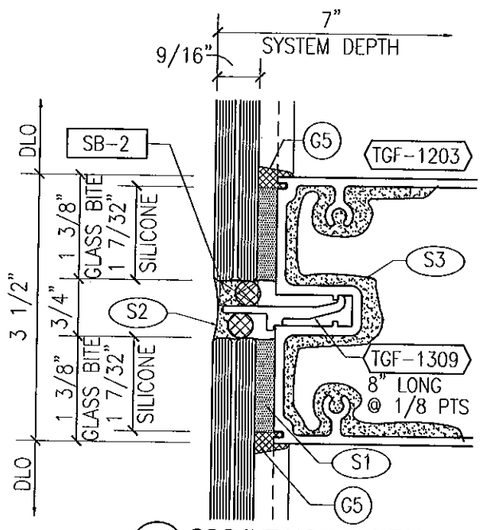

1 SSG INT HORIZONTAL
w/ 9/16" THICK GLASS

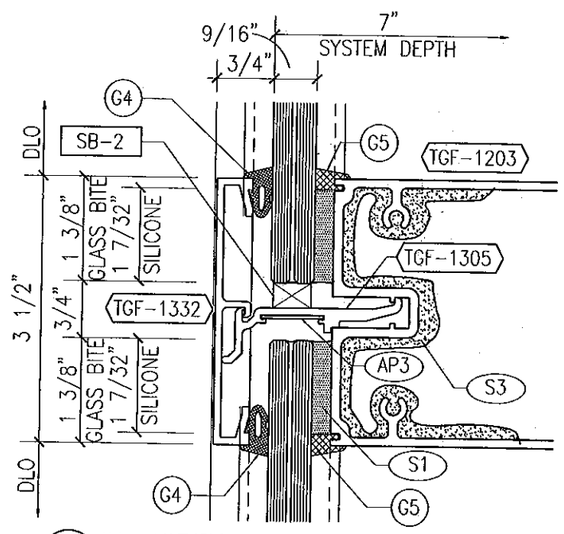

1 INT HORIZONTAL
w/ 9/16" GLASS & 3 1/2" FACE CAP

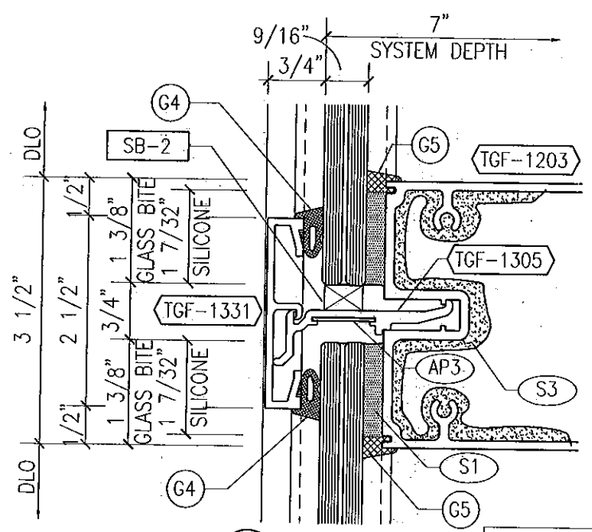

1 INT HORIZONTAL
w/ 9/16" GLASS

FOR MIAMI-DADE CO. B.C.C.O.

Approved as complying with the
Florida Building Code
Date 10/20/2011
NOA# 11-0401.06
Miami Dade Product Control
By

JEFFREY H MARSH
LICENSE
No 70018
STATE OF
FLORIDA
PROFESSIONAL ENGINEER
10/5/2011

TRAINOR
GLASS COMPANY
1101 13TH STREET WEST RIVIERA BEACH, FLORIDA 33404
PH. (561) 863-7078 FAX (561) 863-7088
www.trainorglass.com
ILLINOIS FLORIDA GEORGIA NEW JERSEY COLORADO TEXAS ARIZONA VIRGINIA MARYLAND

REVISIONS

NO.	DATE	BY

DESIGN ENGINEERING & CONSULTING Inc
2306 N. COLLINS BLVD., SUITE 100 PH. 972-444-0640
RICHARDSON, TEXAS 75080 FAX. 972-444-1206

Date	Scale
3-3-11	HALF

Drawing No
4326438

Drawing Title
113 PSF
LARGE MISSILE IMPACT
DETAILS

Sheet No
16 / 44

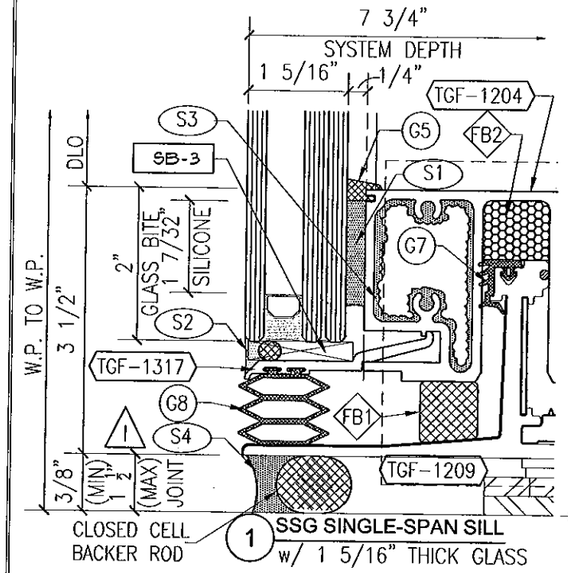

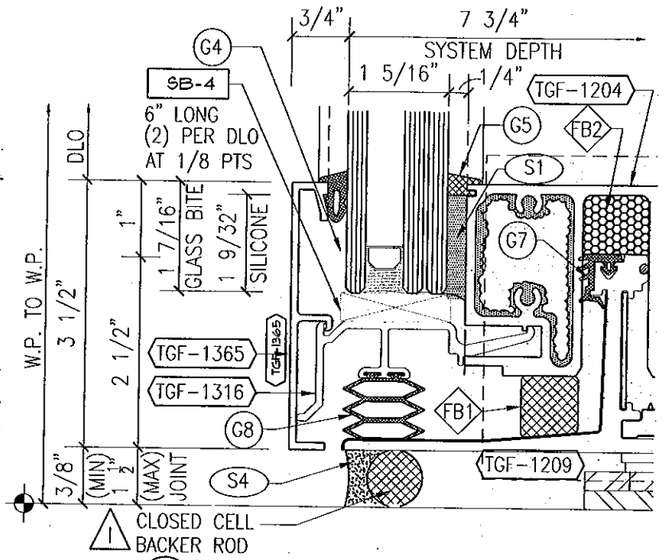

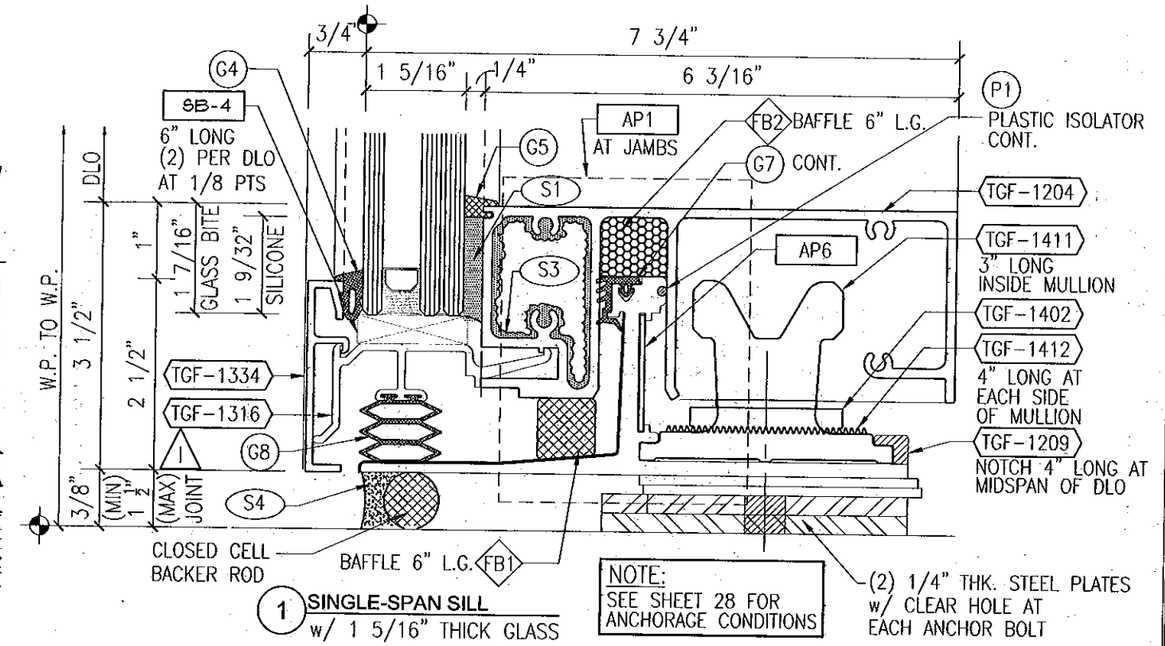

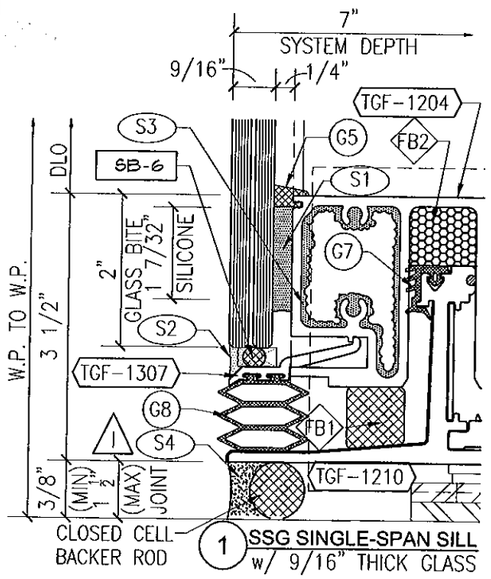

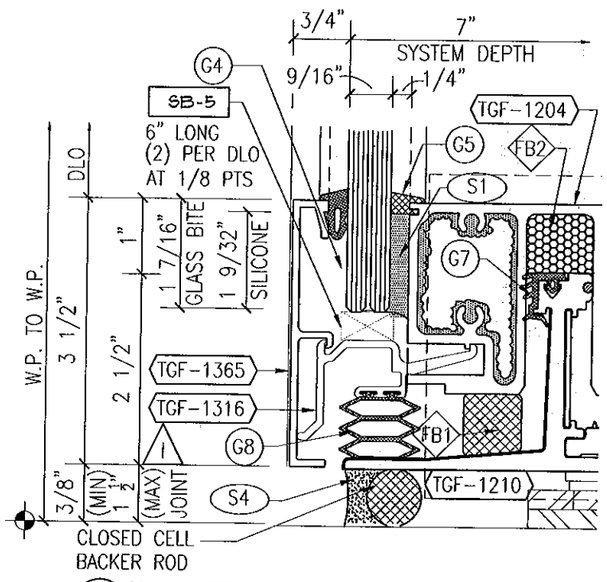

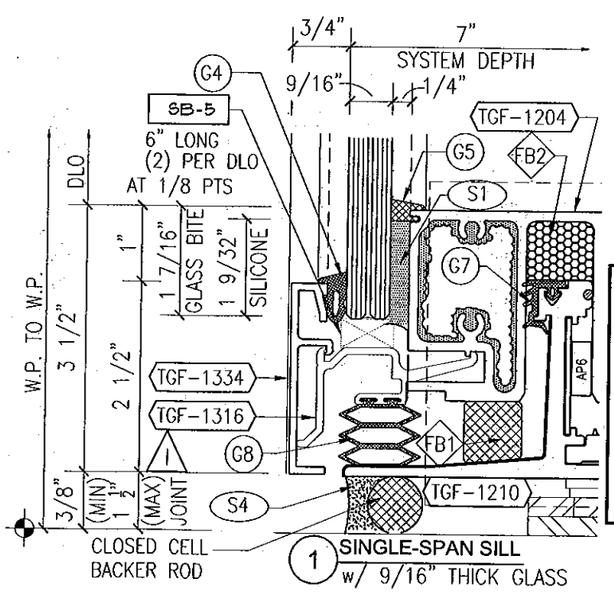

PERIMETER SEALANT OPTIONS

DOW CORNING 790 SILICONE
DOW CORNING 791 SILICONE
DOW CORNING 795 SILICONE
TREMCO SPECTRUM 2

ALTERNATE PERIMETER SEALANT TYPES AND JOINT SIZES SHALL BE DESIGNED AND APPROVED BY DESIGN PROFESSIONAL OF RECORD AND/OR THE SEALANT MANUFACTURER.

FOR MIAMI-DADE CO. B.C.C.O.

Approved as complying with the Florida Building Code
Date 10/20/11
NOA# 11-0401.06
Miami Dade Product Control
By

JEFFREY H MARSH
LICENSE
No 70018
STATE OF FLORIDA
PROFESSIONAL ENGINEER
10/5/2011

GLASS COMPANY
1101 13TH STREET WEST RIVIERA BEACH, FLORIDA 33404
PH. (561) 863-7078 FAX (561) 863-7088
www.trainorglass.com
TRAINOR
ILLINOIS FLORIDA GEORGIA NEW JERSEY COLORADO TEXAS ARIZONA VIRGINIA MARYLAND

REVISIONS

NO.	DATE	BY	
1	10/5/11	TED	UPDATED MIA DIMENSIONS
2			
3			
4			
5			

DESIGN ENGINEERING & CONSULTING Inc
3206 N. COLLINS BLVD., SUITE 100 RICHARDSON, TEXAS 75080
PH: 972-644-6644 FAX: 972-644-6606

Date	Scale
3-3-11	HALF

Drawing No
4326438

Drawing Title
113 PSF
LARGE MISSILE IMPACT DETAILS

Sheet No
17 /44

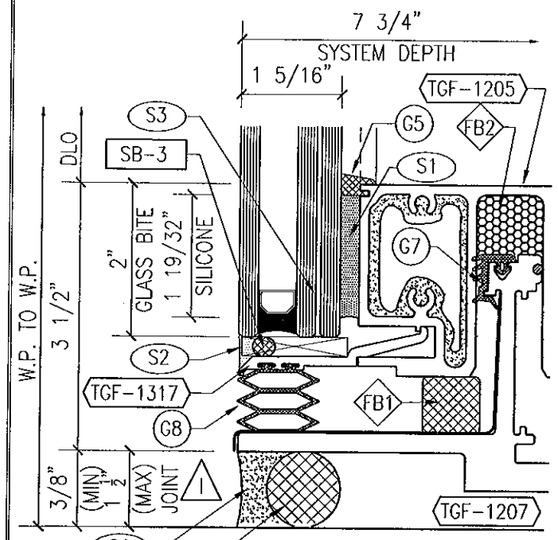

1 SSG SILL HORIZONTAL
w/ 1 5/16" THICK GLASS

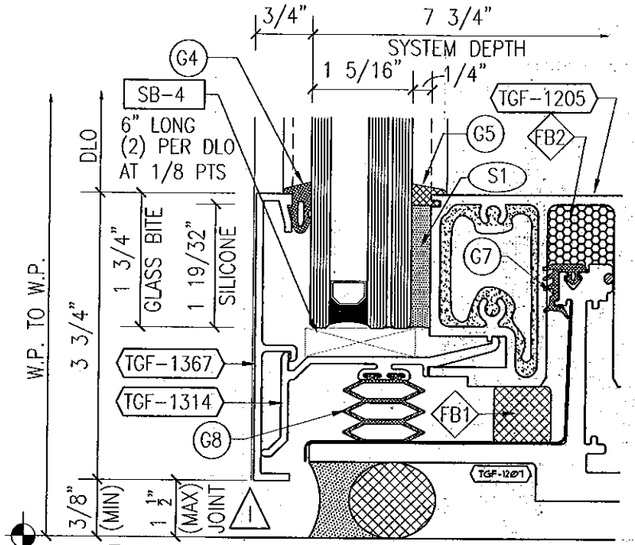

1 SILL HORIZONTAL
w/ 1 5/16" THICK GLASS & 3 3/4" FACE CAP

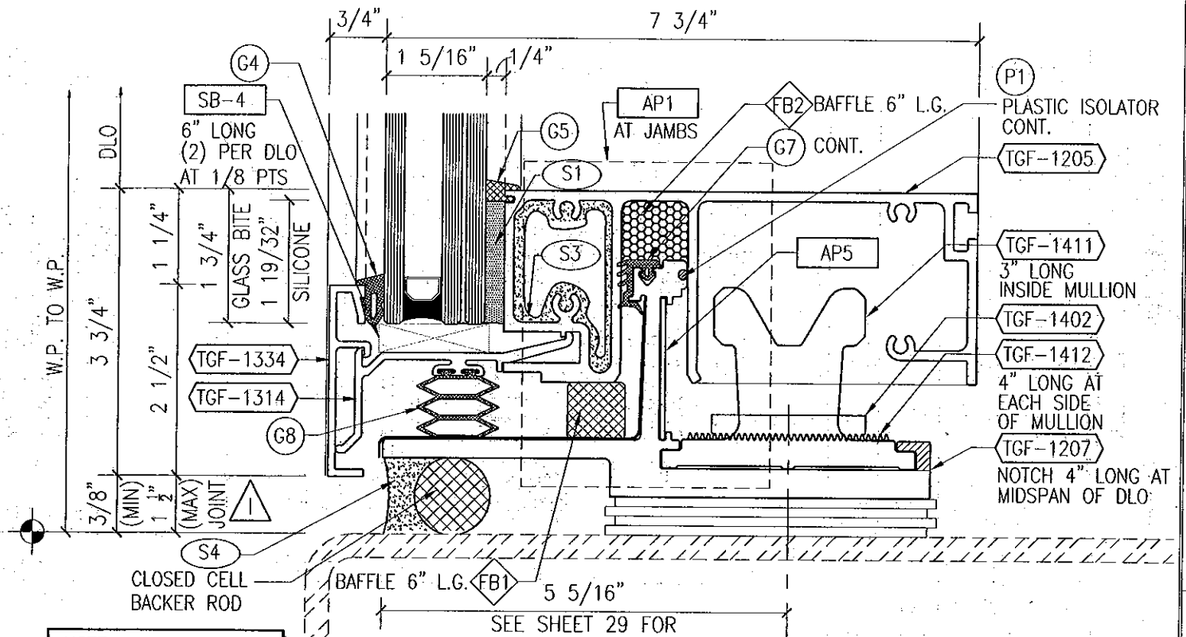

NOTE:
SEE SHEET 29 FOR
ANCHORAGE CONDITIONS

1 SILL HORIZONTAL AT WINDLOAD ANCHOR
w/ 1 5/16" THICK GLASS

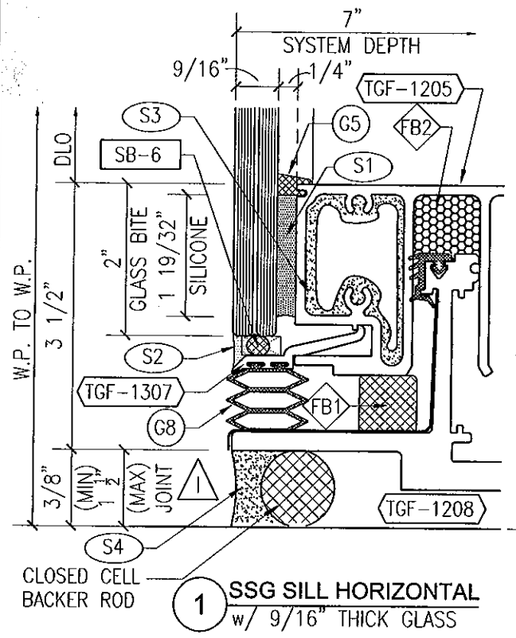

1 SSG SILL HORIZONTAL
w/ 9/16" THICK GLASS

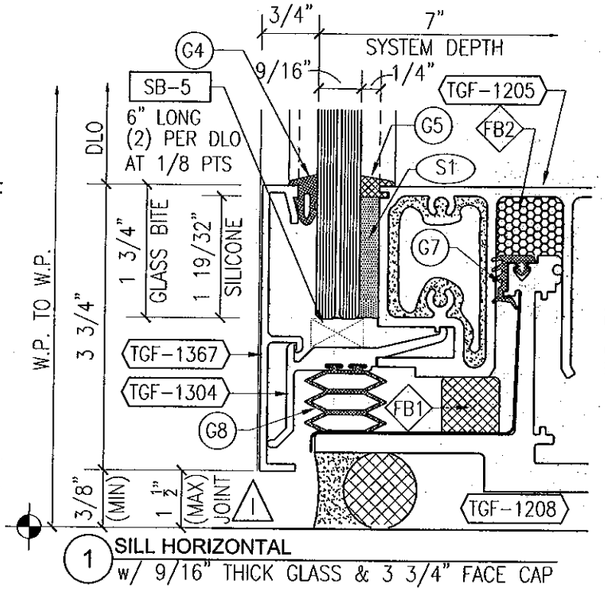

1 SILL HORIZONTAL
w/ 9/16" THICK GLASS & 3 3/4" FACE CAP

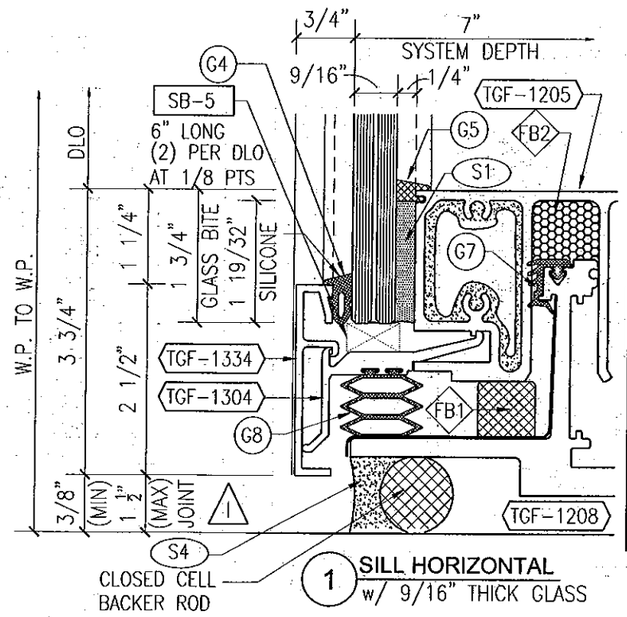

1 SILL HORIZONTAL
w/ 9/16" THICK GLASS

PERIMETER SEALANT OPTIONS

DOW CORNING 790	SILICONE
DOW CORNING 791	SILICONE
DOW CORNING 795	SILICONE
TREMCO SPECTRUM 2	

ALTERNATE PERIMETER SEALANT TYPES AND JOINT SIZES SHALL BE DESIGNED AND APPROVED BY DESIGN PROFESSIONAL OF RECORD AND/OR THE SEALANT MANUFACTURER.

FOR MIAMI-DADE CO. B.C.C.O.

Approved as complying with the Florida Building Code
Date 10/20/2011
NOA# 11-0401.06
Miami Dade Product Control
By

JEFFREY H MARSH
LICENSE
No 70018
STATE OF
FLORIDA
PROFESSIONAL ENGINEER
10/5/2011

TRAINOR GLASS COMPANY
1101 13TH STREET WEST · RIVIERA BEACH, FLORIDA 33404
PH. (561) 863-7078 FAX (561) 863-7088
www.trainorglass.com
ILLINOIS FLORIDA GEORGIA NEW JERSEY COLORADO TEXAS ARIZONA VIRGINIA MARYLAND

DESIGN ENGINEERING & CONSULTING Inc
2800 N. GLENN BVD. – SUITE 130 TEL 972-564-9840
FORNEY, TEXAS 75126 FAX 972-564-9304

NO.	DATE	BY	REVISIONS
1	10/04/11		UPDATED WIND JOINT SIZE

Date	Scale
3-3-11	HALF

Drawing No
4326438

Drawing Title
113 PSF
LARGE MISSILE IMPACT
DETAILS

Sheet No
18 / 44

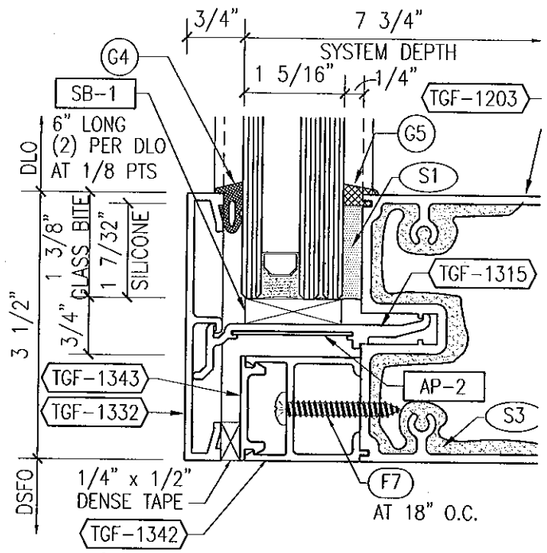

1 DOOR HEAD w/ TRANSOM
w/ 1 5/16" GLASS & 3 1/2" FACE CAP

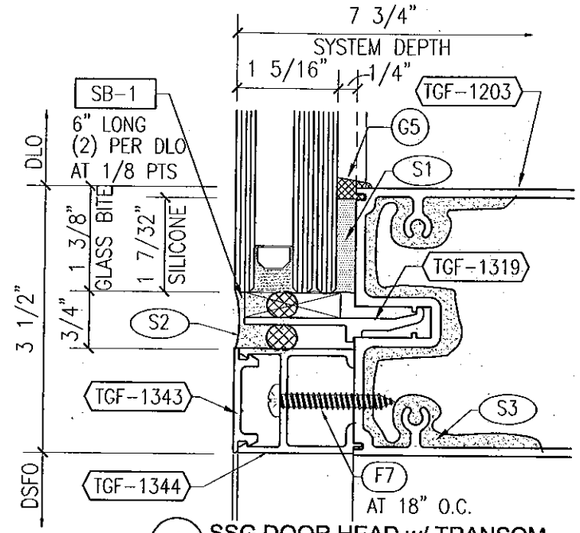

1 SSG DOOR HEAD w/ TRANSOM
w/ 1 5/16" THICK GLASS

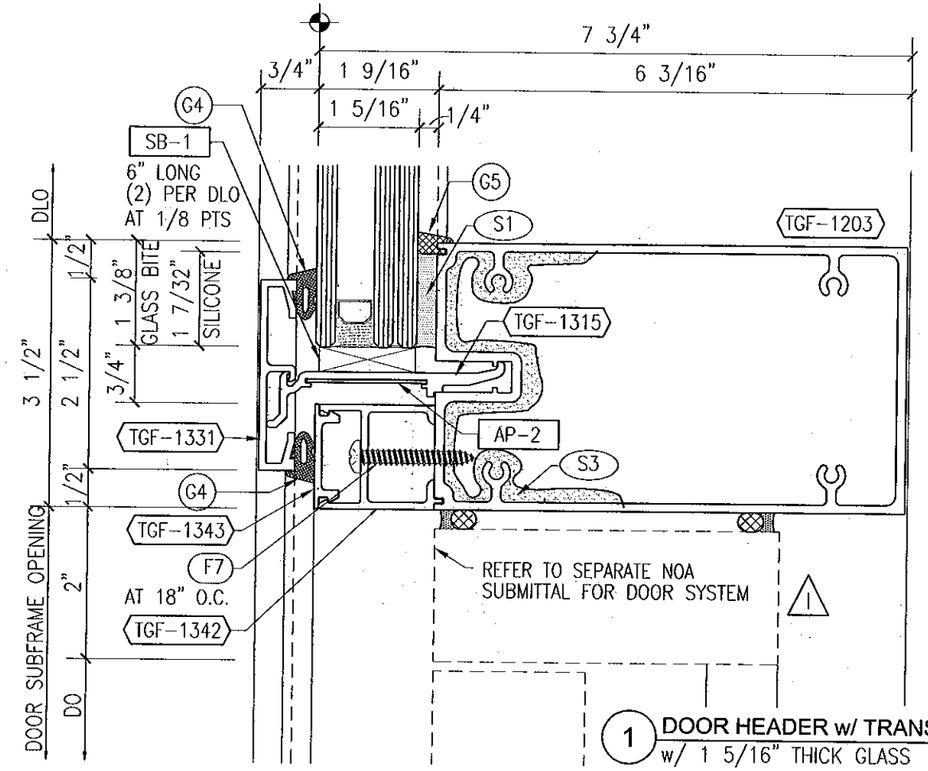

1 DOOR HEADER w/ TRANSOM LITE
w/ 1 5/16" THICK GLASS

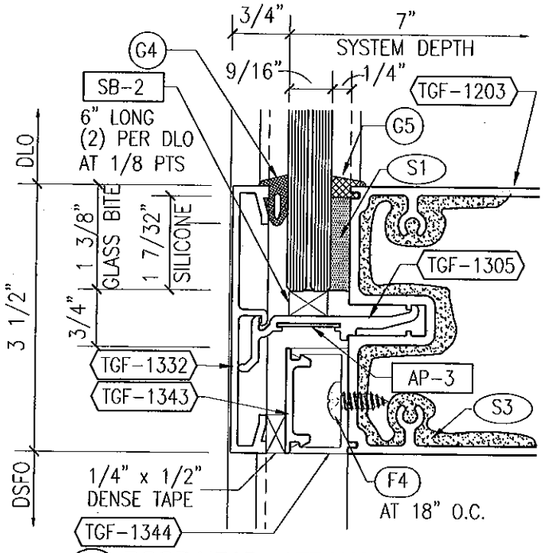

1 DOOR HEAD w/ TRANSOM
w/ 9/16" GLASS & 3 1/2" FACE CAP

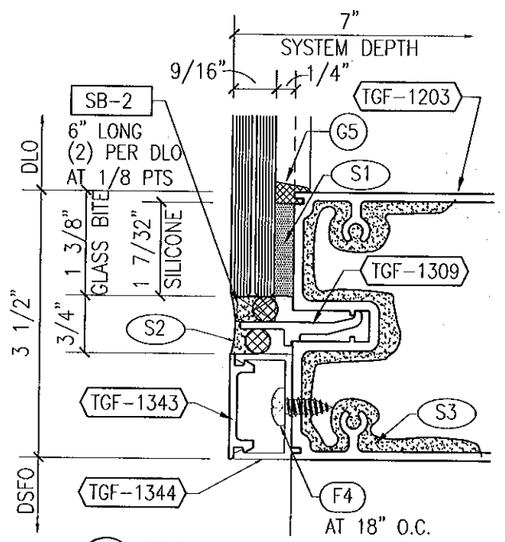

1 SSG DOOR HEAD w/ TRANSOM
w/ 9/16" THICK GLASS

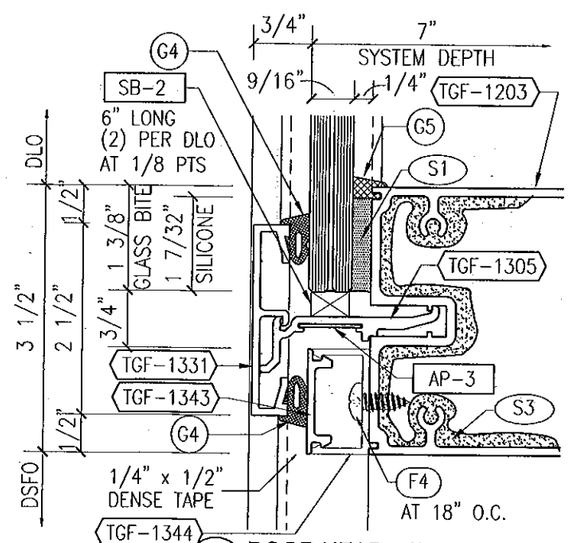

1 DOOR HEAD w/ TRANSOM
w/ 9/16" GLASS

FOR MIAMI-DADE CO. B.C.C.O.

Approved as complying with the
Florida Building Code
Date 10/20/2011
NOA# 11-0401.06
Miami Dade Product Control
By

JEFFREY H MARSH
LICENSE
No 70018
STATE OF
FLORIDA
PROFESSIONAL ENGINEER
10/5/2011

GLASS COMPANY
1101 13TH STREET WEST RIVIERA BEACH, FLORIDA 33404
PH. (561) 863-7078 FAX (561) 863-7088
www.trainorglass.com
TRAINOR
ILLINOIS FLORIDA GEORGIA NEW JERSEY COLORADO TEXAS ARIZONA VIRGINIA MARYLAND

REVISIONS

NO.	DATE	BY	DESC.
A	8/26/11		UPDATED NOTE FOR SUBMITTAL FOR DOOR SYSTEM
A			
A			
A			
A			

DESIGN ENGINEERING & CONSULTING Inc
PH. 972-644-8646
FAX: 972-644-2254
205 N. CHAUNCE BLVD., SUITE 130
SEGUIN, TEXAS 78155

Date	Scale
3-3-11	HALF

Drawing No
4326438

Drawing Title
113 PSF
LARGE MISSILE IMPACT
DETAILS

Sheet No
19 / 44

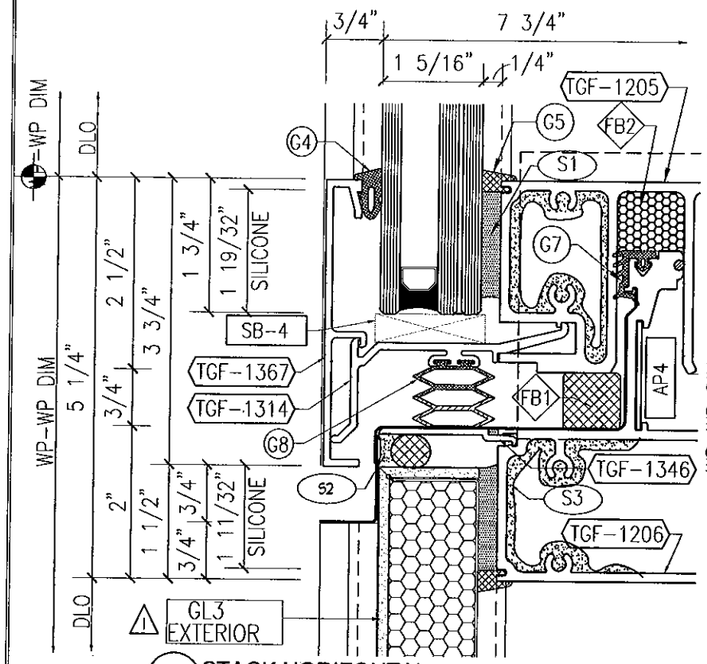

1 STACK HORIZONTAL
w/ 1 5/16" GLAZING & 3 3/4" FACE CAP

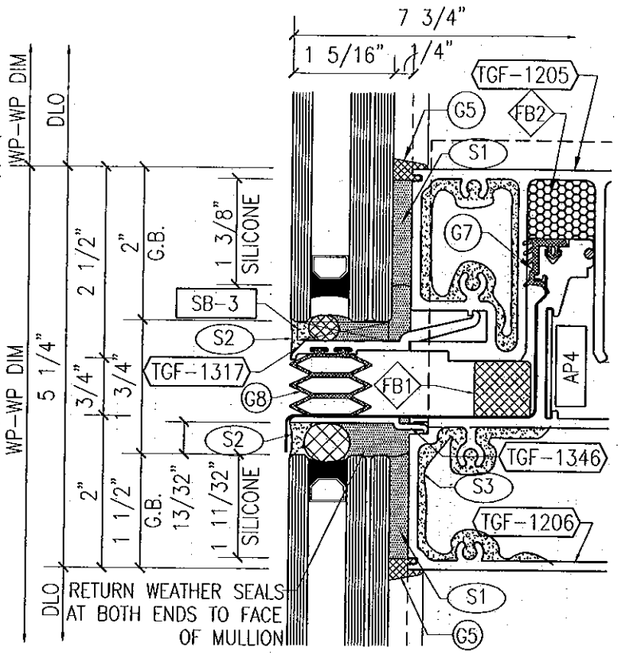

1 SSG STACK HORIZONTAL
w/ 1 5/16" GLAZING

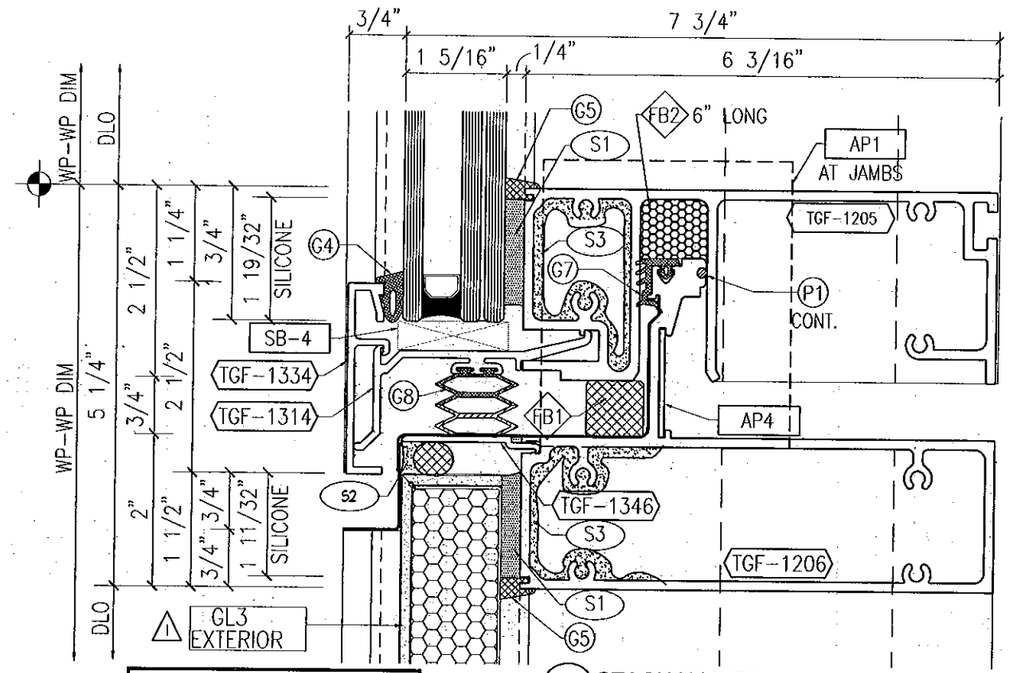

1 STACK HORIZONTAL
w/ 1 5/16" GLAZING

NOTE:
SEE SHEETS 21 THRU 25 FOR MIDSPAN ANCHORAGE CONDITIONS (BENEATH STACK)

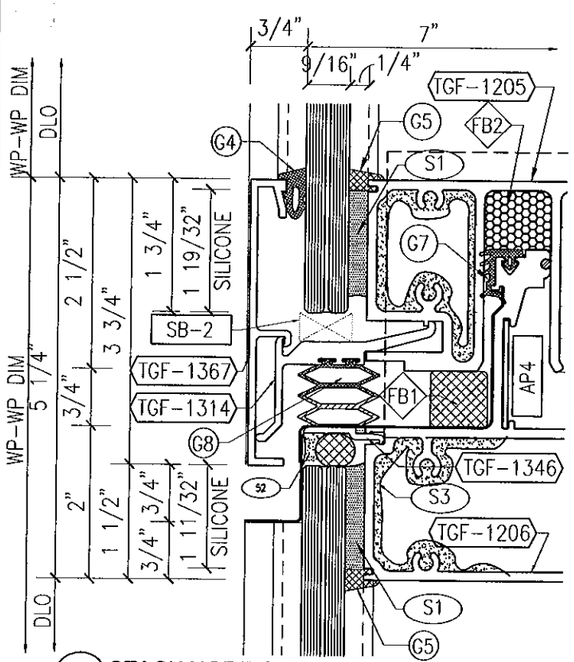

1 STACK HORIZONTAL
w/ 9/16" GLAZING & 3 3/4" FACE CAP

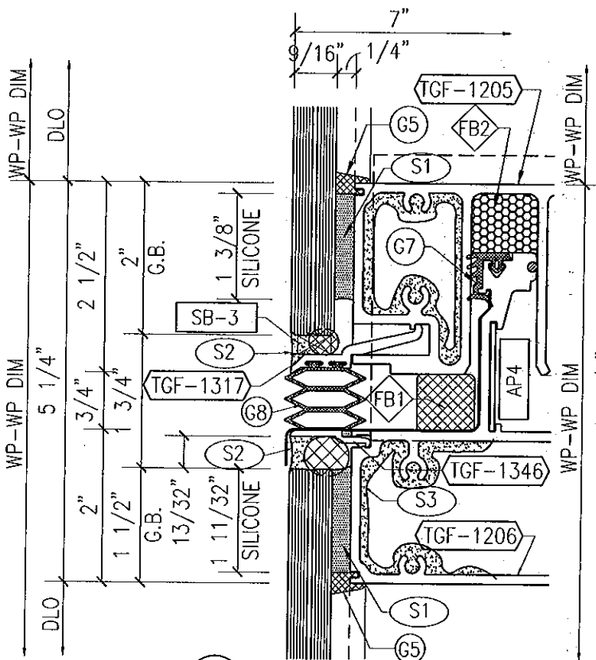

1 SSG STACK HORIZONTAL
w/ 9/16" GLAZING

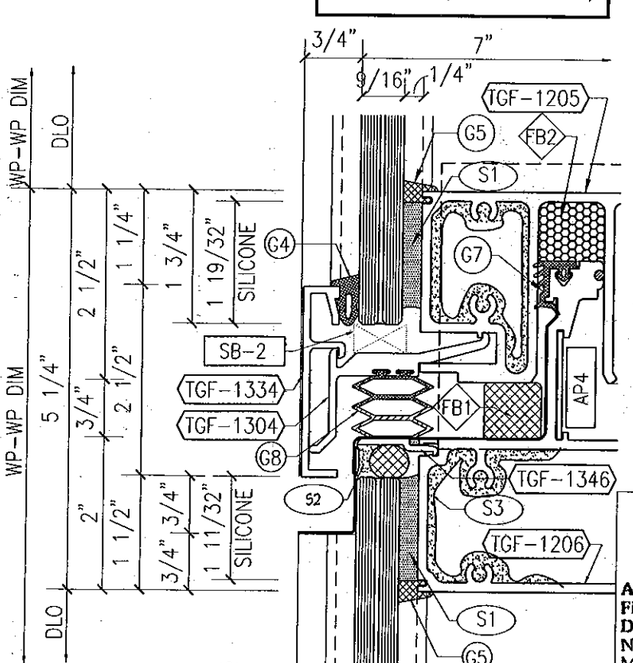

1 STACK HORIZONTAL
w/ 9/16" GLAZING

FOR MIAMI-DADE CO. B.C.C.O.

Approved as complying with the Florida Building Code
Date 10/20/2011
NOA# 11-0401.06
Miami Dade Product Control
By

JEFFREY H MARSH
LICENSE
No 70018
STATE OF FLORIDA
PROFESSIONAL ENGINEER
10/5/2011

GLASS COMPANY
1101 13TH STREET WEST . RIVIERA BEACH, FLORIDA 33404
PH. (561) 863-7078 FAX (561) 863-7088
www.trainorglass.com
TRAINOR
ILLINOIS FLORIDA GEORGIA NEW JERSEY COLORADO TEXAS ARIZONA VIRGINIA MARYLAND

REVISIONS

NO.	DATE	BY	REC
1	10/05/11	REC	ADDED NOTE FOR SLD CASEWORK
2			
3			
4			
5			

DESIGN ENGINEERING & CONSULTING Inc.
2365 N. COLLINS BLVD. - SUITE 130
RICHARDSON, TEXAS 75080
PH. 972-644-6649
FAX: 972-644-6204

Date	Scale
3-3-11	HALF

Drawing No
4326438

Drawing Title
113 PSF
LARGE MISSILE IMPACT
DETAILS

Sheet No
20 / 44

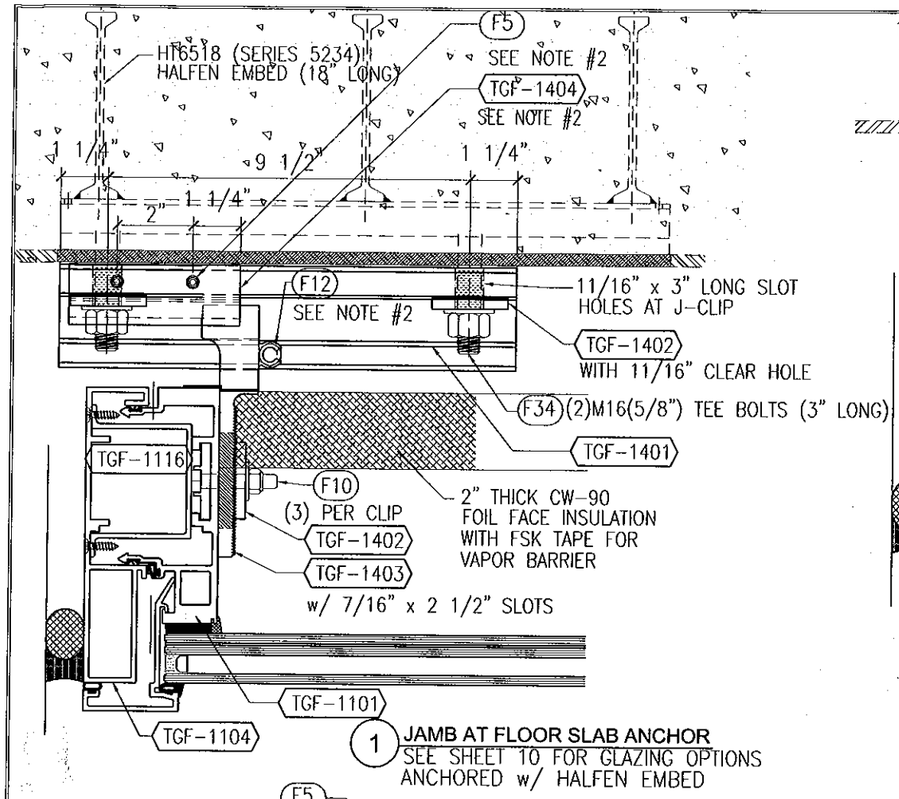

1 JAMB AT FLOOR SLAB ANCHOR
SEE SHEET 10 FOR GLAZING OPTIONS
ANCHORED w/ HALFEN EMBED

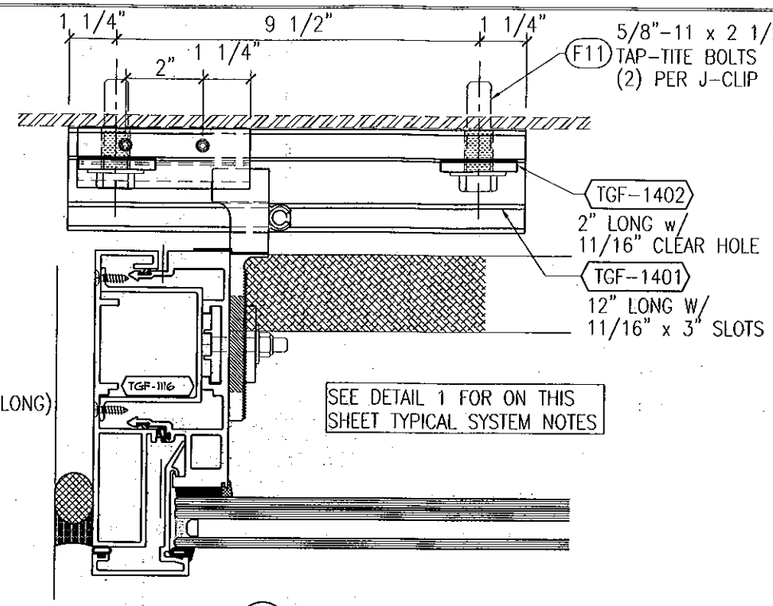

2 JAMB ANCHOR AT TUBE STEEL
SEE SHEET 10 FOR GLAZING OPTIONS
ANCHORED w/ 5/8" TAP-TITE BOLTS

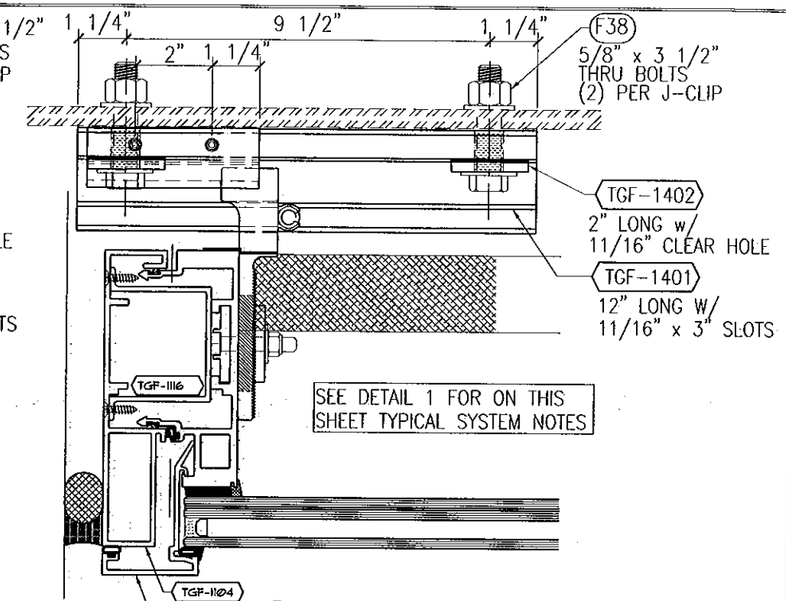

3 JAMB ANCHOR AT STEEL CHANNEL
SEE SHEET 10 FOR GLAZING OPTIONS
ANCHORED w/ 5/8" THRU BOLTS

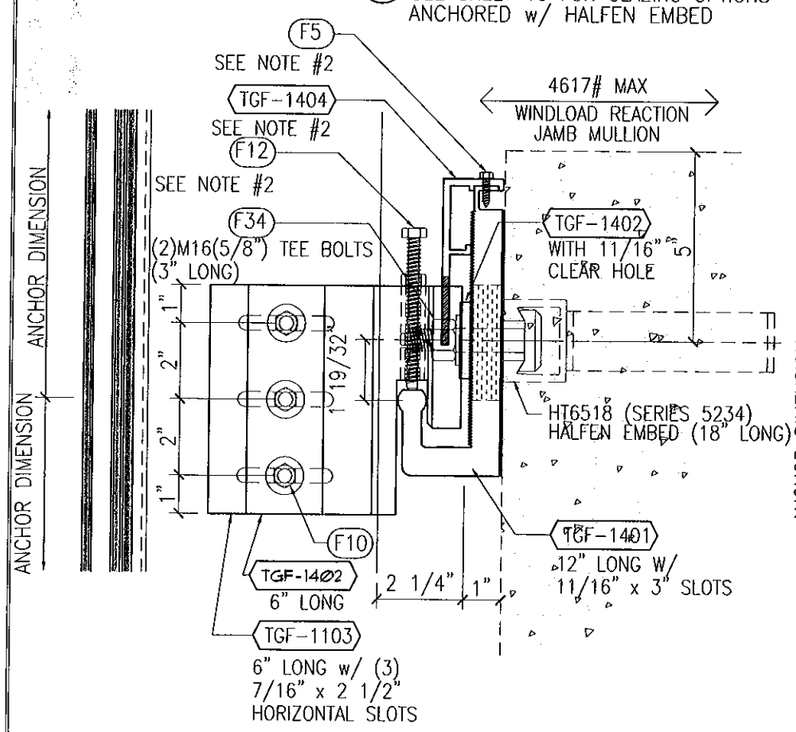

1A DL ANCHOR AT FLOOR SLAB (SIDE VIEW)
SEE SHEET 10 FOR GLAZING OPTIONS
ANCHORED w/ HALFEN EMBED

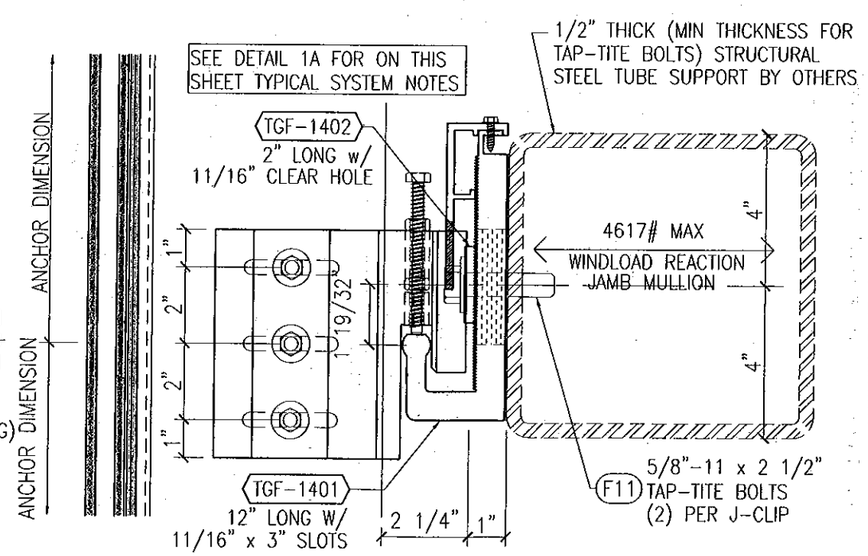

2A DL ANCHOR AT TUBE STEEL SUPPORT (SIDE VIEW)
SEE SHEET 10 FOR GLAZING OPTIONS
ANCHORED w/ 5/8" TAP-TITE BOLTS

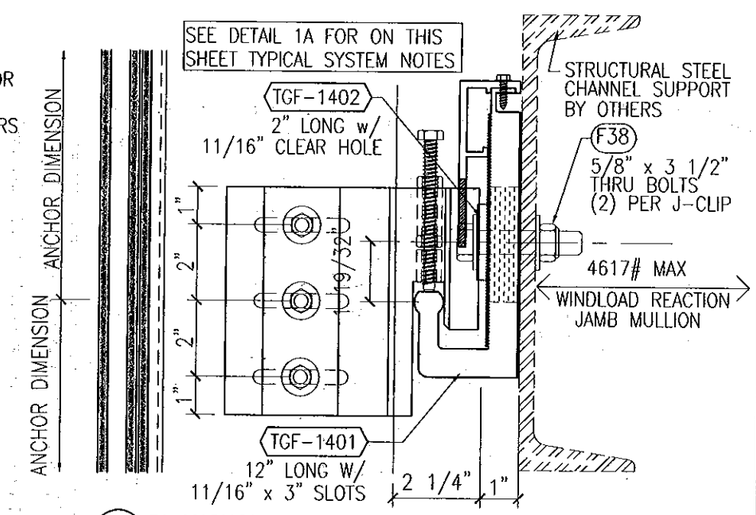

3A DL ANCHOR AT STEEL SUPPORT CHANNEL (SIDE VIEW)
SEE SHEET 10 FOR GLAZING OPTIONS
ANCHORED w/ 5/8" THRU BOLTS

NOTES:

1. SEE DETAILS ON SHEET 10 FOR BALANCE OF JAMB MULLION INFORMATION AND VARIOUS GLAZING OPTIONS
2. INDICATES FASTENERS AND PARTS ARE NOT REQUIRED FOR WINDLOAD ANCHOR CONDITIONS

FOR MIAMI-DADE CO. B.C.C.O.

Approved as complying with the Florida Building Code
Date 10/20/2011
NOA# 11-0401.06
Miami-Dade Product Control
By

JEFFREY H MARSH
LICENSE
No 70018
STATE OF
FLORIDA
PROFESSIONAL ENGINEER
10/5/2011

GLASS COMPANY
1101 13TH STREET WEST RIVIERA BEACH, FLORIDA 33404
PH. (561) 863-7078 FAX (561) 863-7088
www.trainorglass.com
TRAINOR
ILLINOIS FLORIDA GEORGIA NEW JERSEY COLORADO TEXAS ARIZONA VIRGINIA MARYLAND

REVISIONS

NO.	DATE	BY

DESIGN ENGINEERING & CONSULTING Inc.
2905 N. COLLINS BLVD., SUITE 190 ARLINGTON, TEXAS 76006
TEL 972-444-4646 FAX 972-444-4304

Date	Scale
3-3-11	HALF

Drawing No
4326438

Drawing Title
113PSF
LARGE MISSILE IMPACT
ANCHOR DETAILS

Sheet No
21 / 44

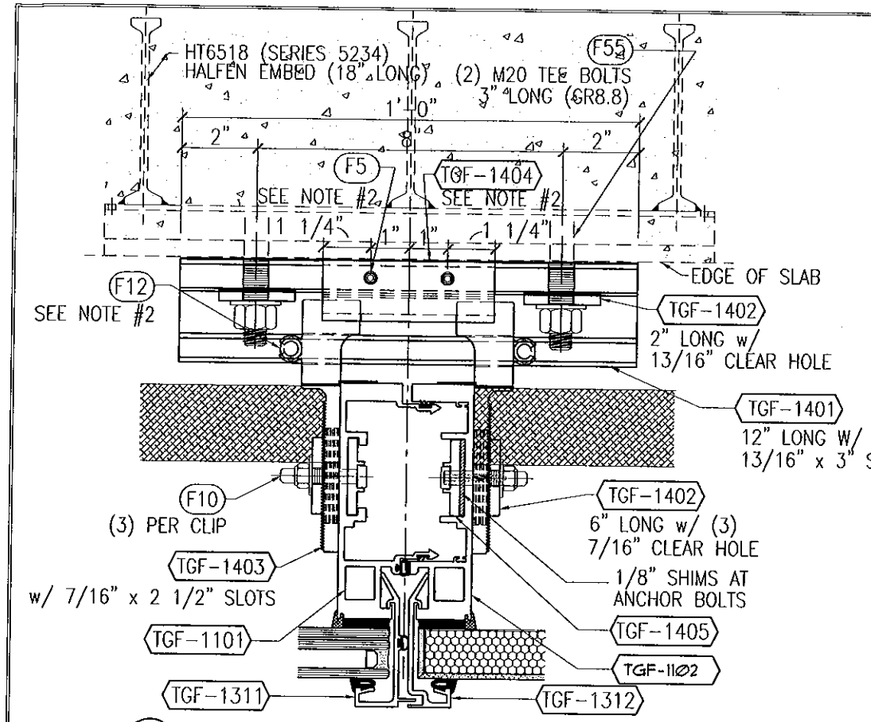

1 INT MULL AT FLOOR SLAB ANCHOR
SEE SHEET 11 FOR GLAZING OPTIONS
ANCHORED w/ HALFEN EMBED

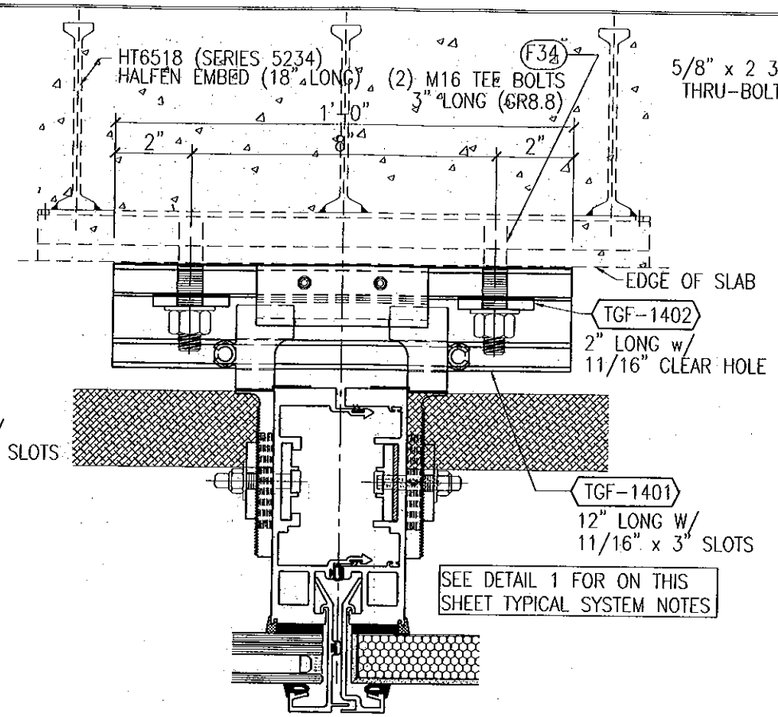

2 INT MULL AT FLOOR SLAB ANCHOR
SEE SHEET 11 FOR GLAZING OPTIONS
ANCHORED w/ HALFEN EMBED

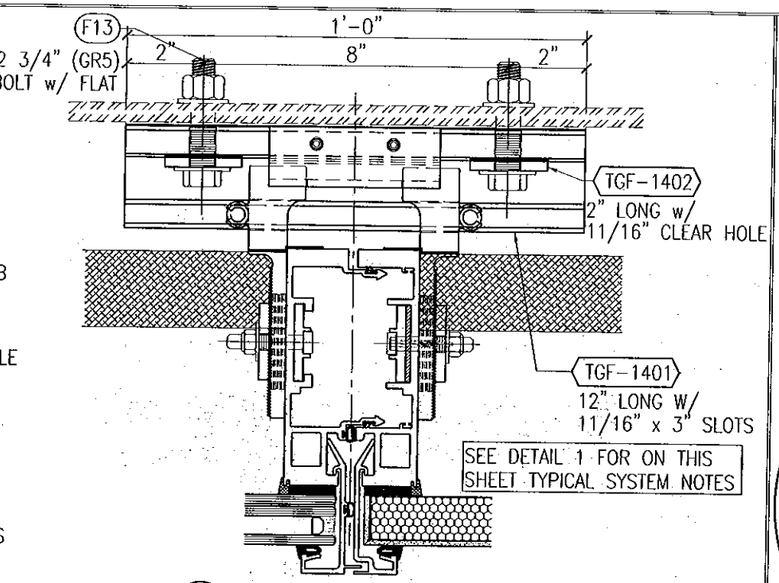

3 INT MULL AT STEEL CHANNEL
SEE SHEET 11 FOR GLAZING OPTIONS
ANCHORED w/ 5/8" THRU BOLTS

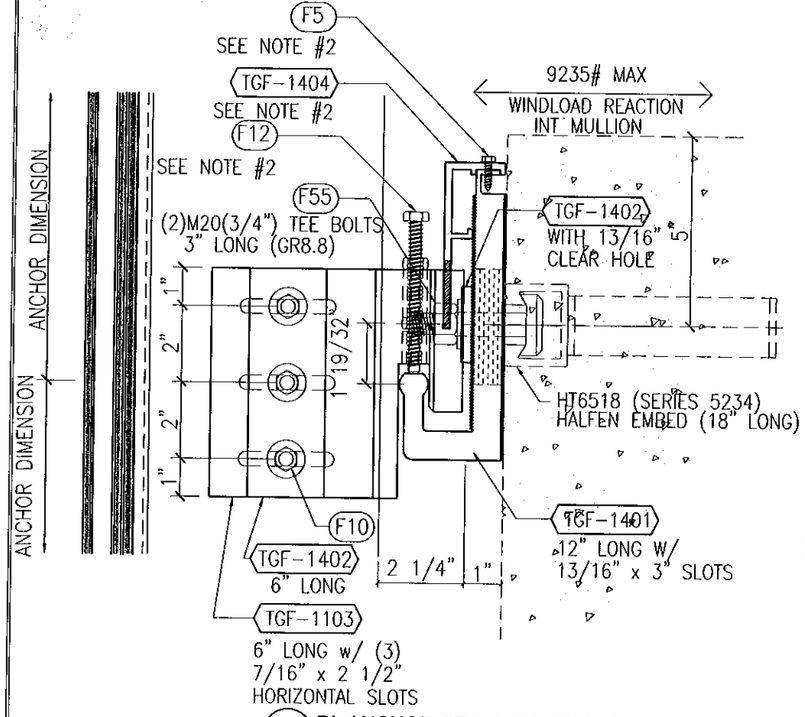

1A DL ANCHOR AT FLOOR SLAB (SIDE VIEW)
SEE SHEET 11 FOR GLAZING OPTIONS
ANCHORED w/ HALFEN EMBED

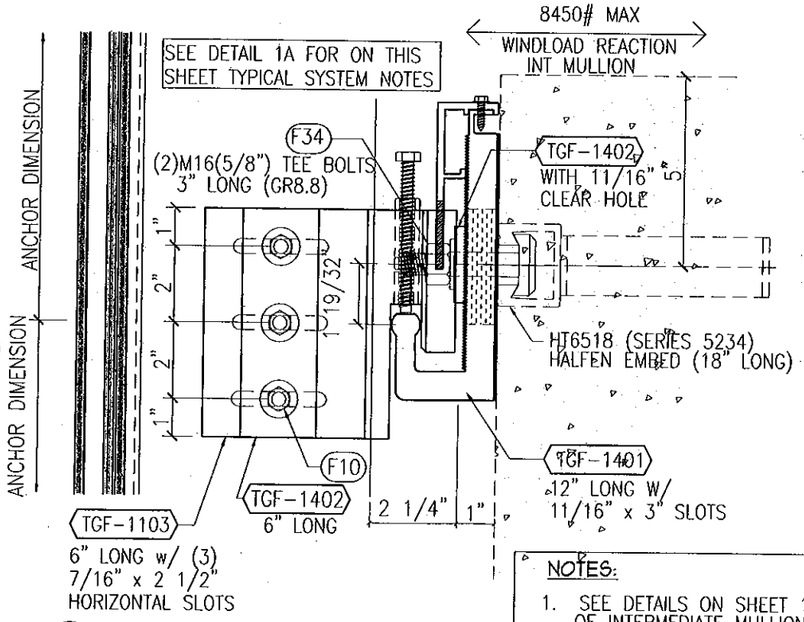

2A DL ANCHOR AT FLOOR SLAB (SIDE VIEW)
SEE SHEET 11 FOR GLAZING OPTIONS
ANCHORED w/ HALFEN EMBED

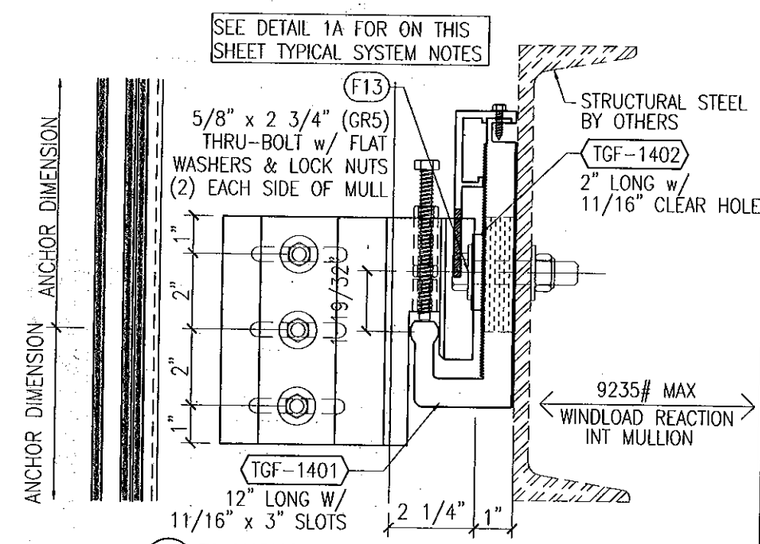

3A DL ANCHOR AT STEEL CHANNEL SUPPORT (SIDE VIEW)
SEE SHEET 11 FOR GLAZING OPTIONS
ANCHORED w/ 5/8" THRU BOLTS

NOTES:

1. SEE DETAILS ON SHEET 11 FOR BALANCE OF INTERMEDIATE MULLION INFORMATION AND VARIOUS GLAZING OPTIONS
2. INDICATES FASTENERS AND PARTS ARE NOT REQUIRED FOR WINDLOAD ANCHOR CONDITIONS

FOR MIAMI-DADE CO. B.C.C.O.

Approved as complying with the Florida Building Code
Date 10/20/2011
NOA# 11-0401.06
Miami Dade Product Control
By

JEFFREY H MARSH
LICENSE
No 70018
STATE OF
FLORIDA
PROFESSIONAL ENGINEER
10/5/2011

GLASS COMPANY
1101 13TH STREET WEST RIVIERA BEACH, FLORIDA 33404
PH. (561) 863-7078 FAX (561) 863-7088
www.trainorglass.com
TRAINOR
ILLINOIS FLORIDA GEORGIA NEW JERSEY COLORADO TEXAS ARIZONA VIRGINIA MARYLAND

REVISIONS

NO.	DATE	BY

DESIGN ENGINEERING & CONSULTING Inc.
3305 N. CRAIGS ROAD, SUITE 100
INDIANAPOLIS, TEXAS 75056
PH: 972-441-2040
FAX: 972-441-4204

Date	Scale
3-3-11	HALF

Drawing No
4326438

Drawing Title
113PSF
LARGE MISSILE IMPACT
ANCHOR DETAILS

Sheet No
22 / 44

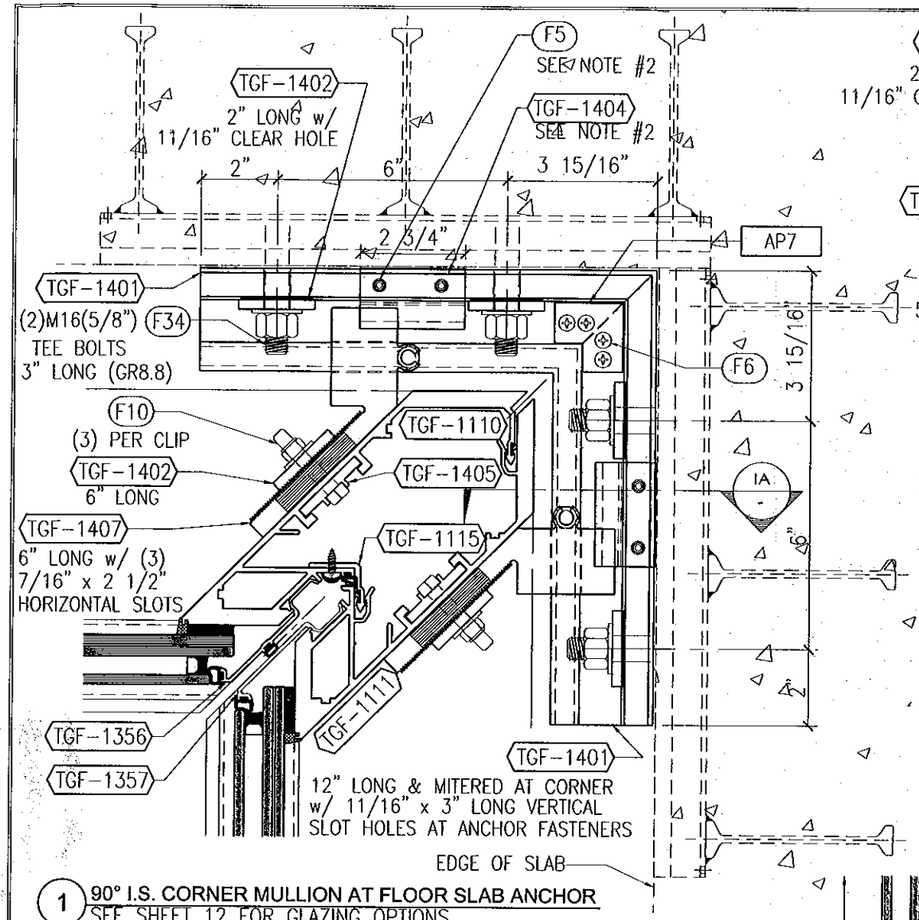

1 **90° I.S. CORNER MULLION AT FLOOR SLAB ANCHOR**
SEE SHEET 12 FOR GLAZING OPTIONS
ANCHORED w/ HALFEN CORNER EMBED

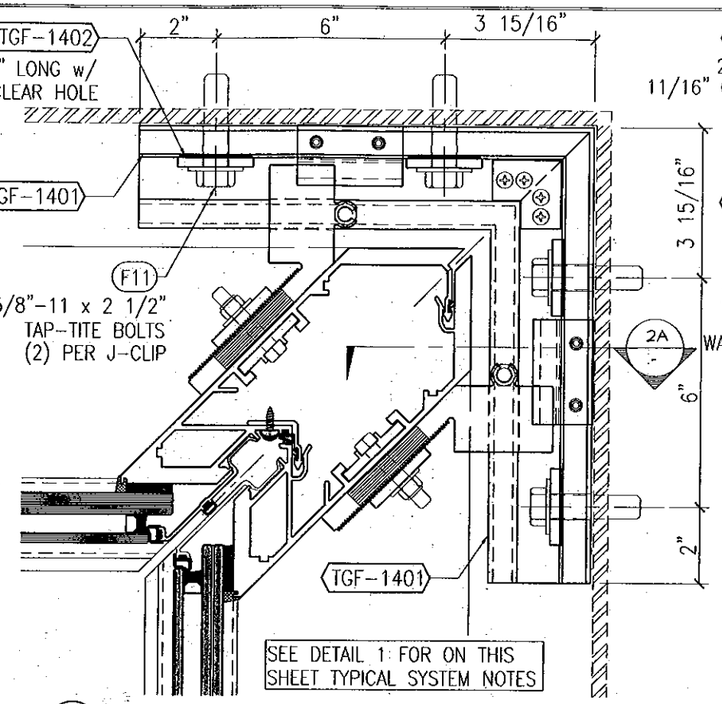

2 **90° I.S. CORNER MULLION AT TUBE STEEL**
SEE SHEET 12 FOR GLAZING OPTIONS
ANCHORED w/ 5/8" TAP-TITE BOLTS

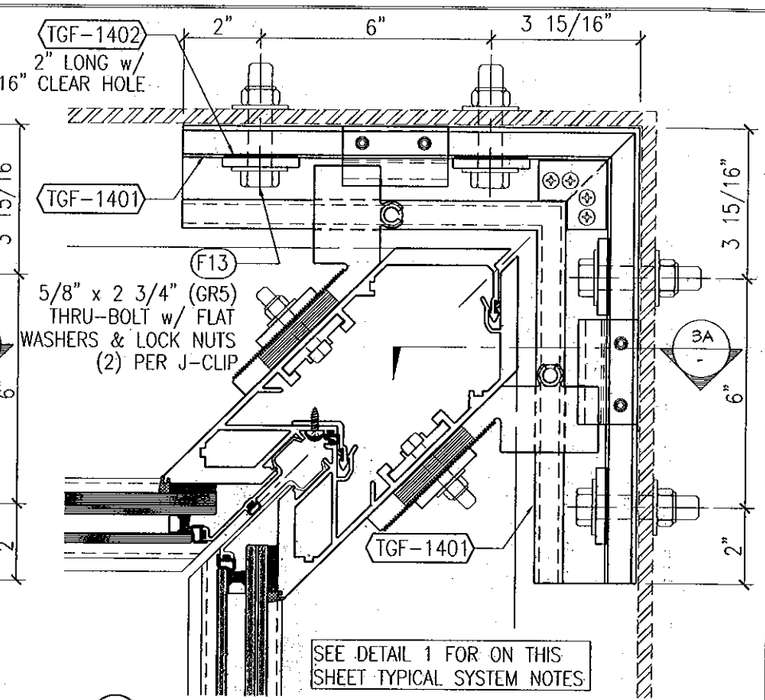

3 **90° I.S. CORNER MULLION AT STEEL CHANNEL**
SEE SHEET 12 FOR GLAZING OPTIONS
ANCHORED w/ 5/8" THRU BOLTS

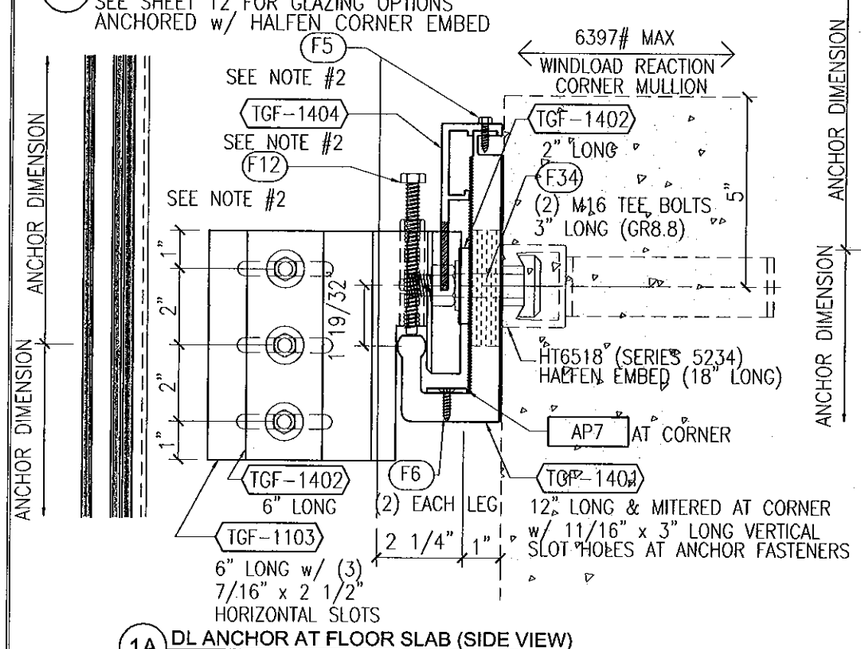

1A **DL ANCHOR AT FLOOR SLAB (SIDE VIEW)**
SEE SHEET 12 FOR GLAZING OPTIONS
ANCHORED w/ HALFEN CORNER EMBED

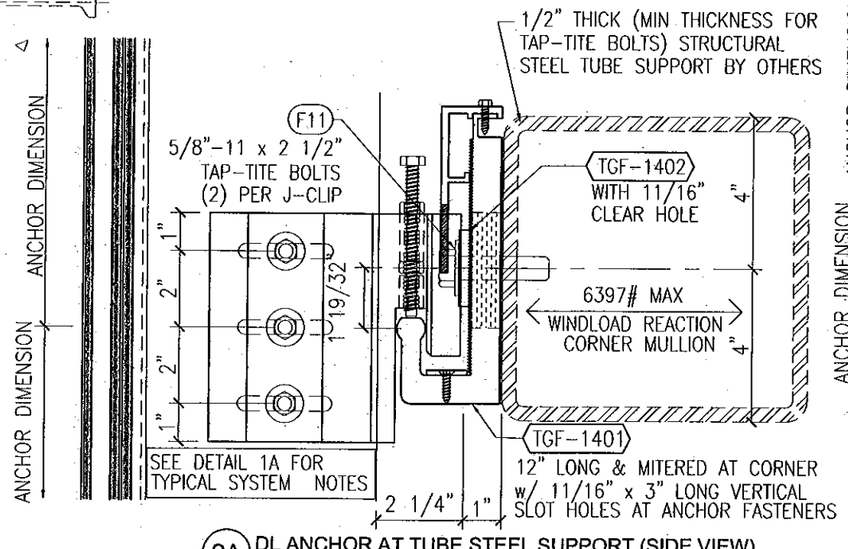

2A **DL ANCHOR AT TUBE STEEL SUPPORT (SIDE VIEW)**
SEE SHEET 12 FOR GLAZING OPTIONS
ANCHORED w/ 5/8" TAP-TITE BOLTS

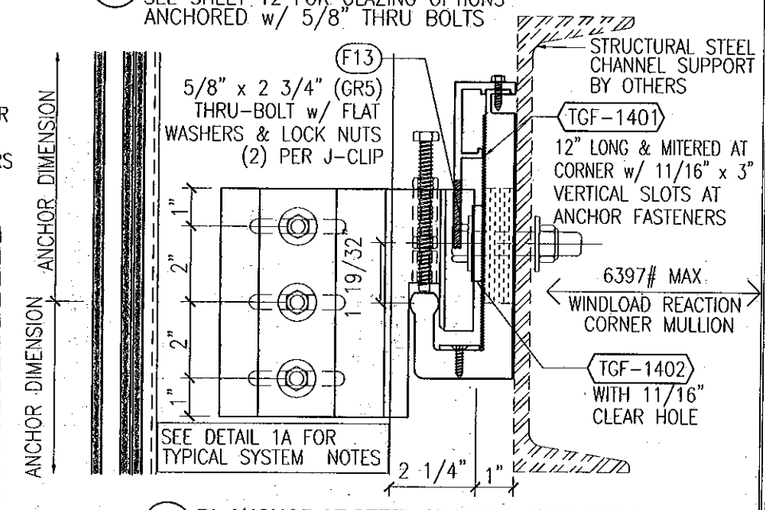

3A **DL ANCHOR AT STEEL CHANNEL SUPPORT (SIDE VIEW)**
SEE SHEET 12 FOR GLAZING OPTIONS
ANCHORED w/ 5/8" THRU BOLTS

NOTES:

1. SEE DETAILS ON SHEET 12 FOR BALANCE OF INSIDE CORNER MULLION INFORMATION AND VARIOUS GLAZING OPTIONS
2. INDICATES FASTENERS AND PARTS ARE NOT REQUIRED FOR WINDLOAD ANCHOR CONDITIONS

FOR MIAMI-DADE CO. B.C.C.O.

Approved as complying with the Florida Building Code
Date 10/20/2011
NOA# 11-0401.06
Miami-Dade Product Control
By

JEFFREY H MARSH
LICENSE
No 70018
STATE OF
FLORIDA
PROFESSIONAL ENGINEER
10/5/2011

TRAINOR GLASS COMPANY
1101 13TH STREET WEST RIVIERA BEACH, FLORIDA 33404
PH. (561) 863-7078 FAX (561) 863-7088
www.trainorglass.com
ILLINOIS FLORIDA GEORGIA NEW JERSEY COLORADO TEXAS ARIZONA VIRGINIA MARYLAND

REVISIONS

NO.	DATE	BY

DESIGN ENGINEERING & CONSULTING Inc

Date	Scale
3-3-11	HALF

Drawing No
4326438

Drawing Title
113PSF
LARGE MISSILE IMPACT
ANCHOR DETAILS

Sheet No
23 / 44

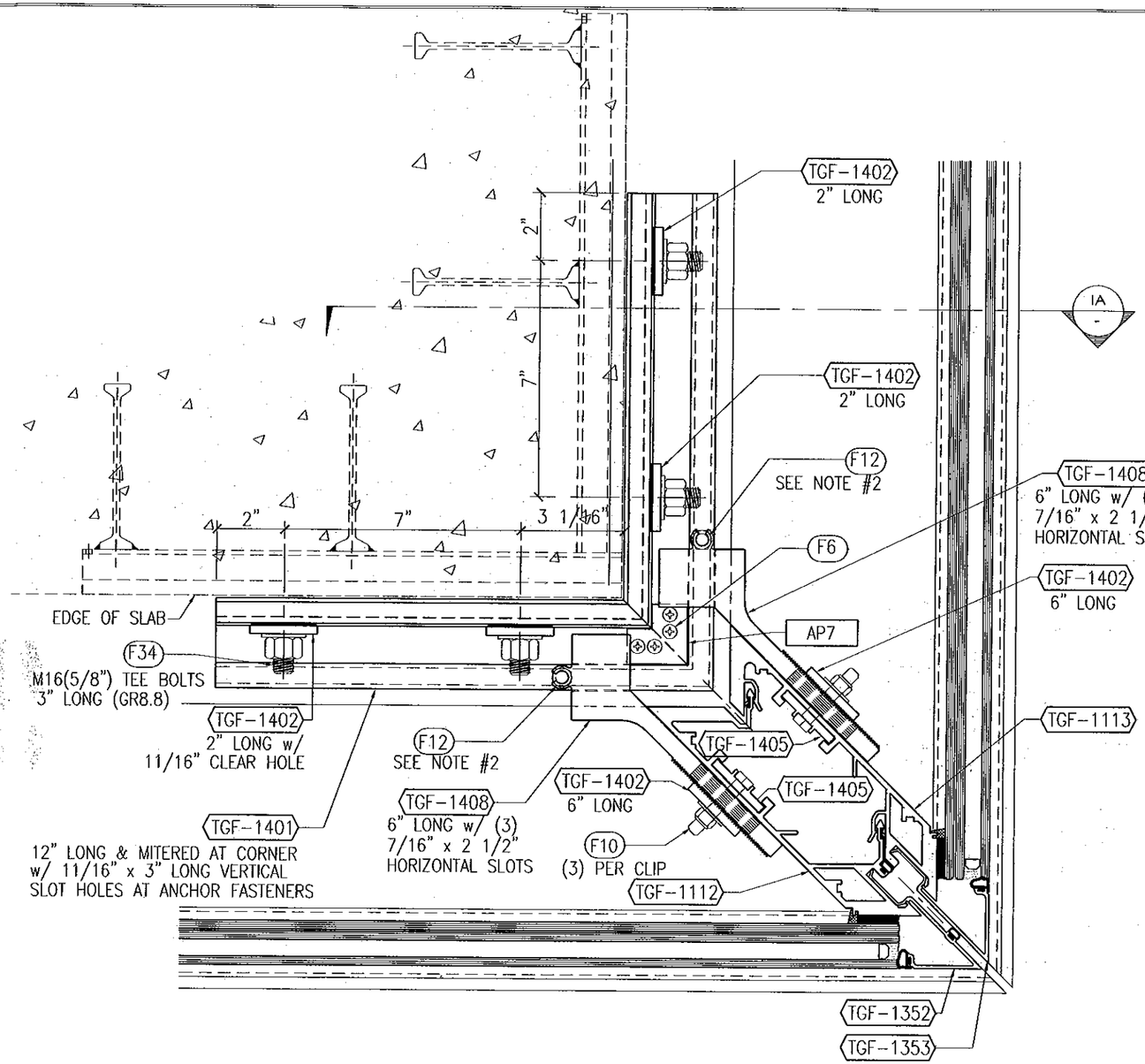

1 90° O.S. CORNER MULL AT FLOOR SLAB ANCHOR
SEE SHEET 13 FOR GLAZING OPTIONS
ANCHORED w/ HALFEN CUSTOM CORNER EMBED

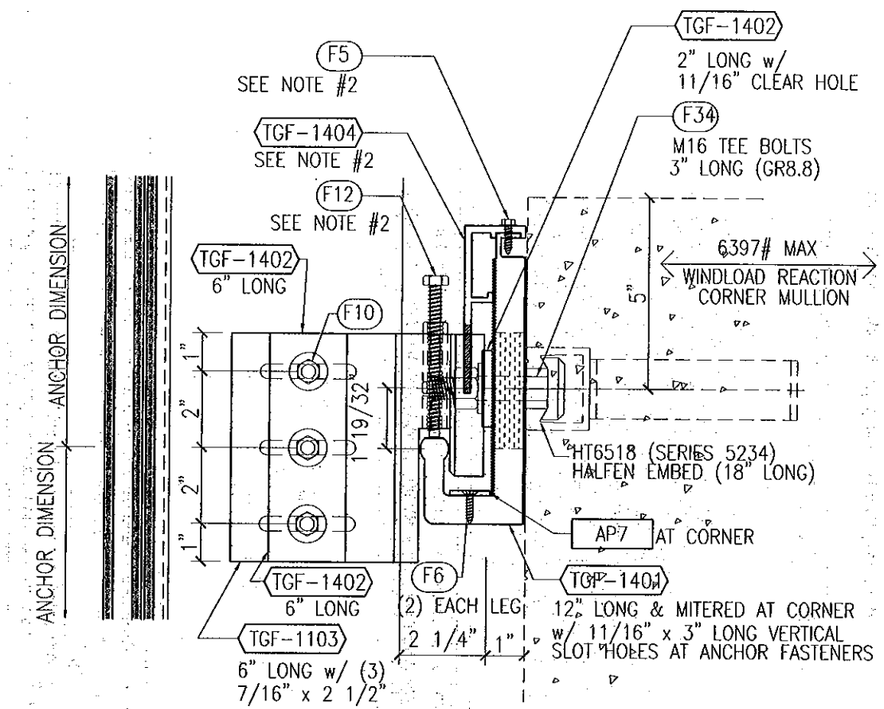

1A DL ANCHOR AT FLOOR SLAB (SIDE VIEW)
SEE SHEET 13 FOR GLAZING OPTIONS
ANCHORED w/ HALFEN CUSTOM CORNER EMBED

NOTES:

1. SEE DETAILS ON SHEET 13 FOR BALANCE OF OUTSIDE CORNER MULLION INFORMATION AND VARIOUS GLAZING OPTIONS
2. INDICATES FASTENERS AND PARTS ARE NOT REQUIRED FOR WINDLOAD ANCHOR CONDITIONS

FOR MIAMI-DADE CO. B.C.C.O.

Approved as complying with the Florida Building Code
Date 10/20/2011
NOA# 11-0401.06
Miami Dade Product Control
By

JEFFREY H MARSH
LICENSE
No 70018
STATE OF
FLORIDA
PROFESSIONAL ENGINEER
10/5/2011

TRAINOR GLASS COMPANY
1101 13TH STREET WEST RIVIERA BEACH, FLORIDA 33404
PH. (561) 863-7076 FAX (561) 863-7088
www.trainorglass.com
ILLINOIS FLORIDA GEORGIA NEW JERSEY COLORADO TEXAS ARIZONA VIRGINIA MARYLAND

REVISIONS

NO.	DATE	BY

DESIGN ENGINEERING & CONSULTING Inc.
2905 N. COLLINS BLVD., SUITE 130 RICHARDSON, TEXAS 75080
PH: 972-644-0646 FAX: 972-644-0304

Date	Scale
3-3-11	HALF

Drawing No
4326438

Drawing Title
113PSF
LARGE MISSILE IMPACT
ANCHOR DETAILS

Sheet No
24 / 44

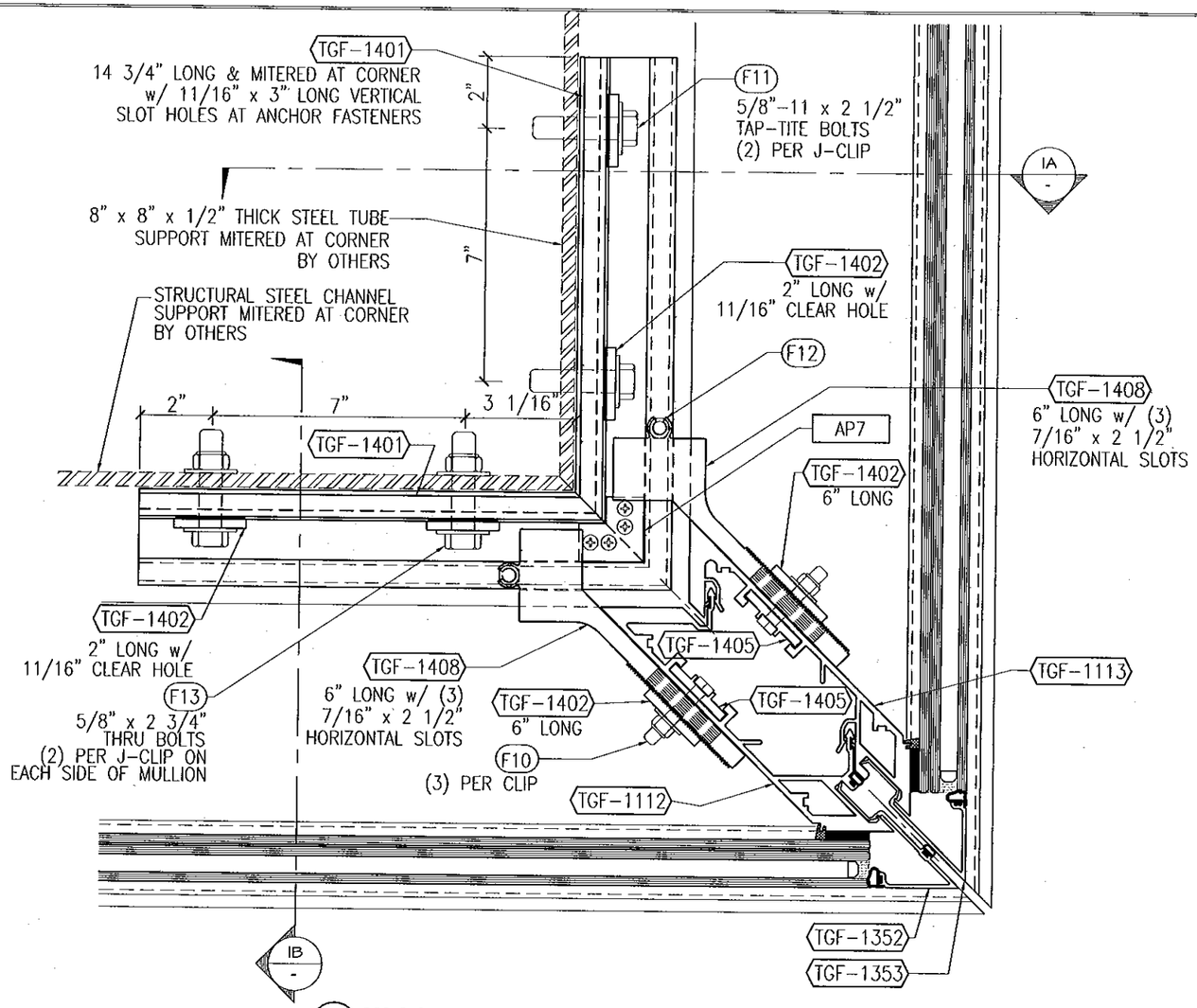

1 **90° O.S. CORNER MULL AT TUBE STEEL SUPPORT**
SEE SHEET 13 FOR GLAZING OPTIONS
ANCHORED w/ 5/8" TAP-TITE OR 5/8" THRU BOLTS

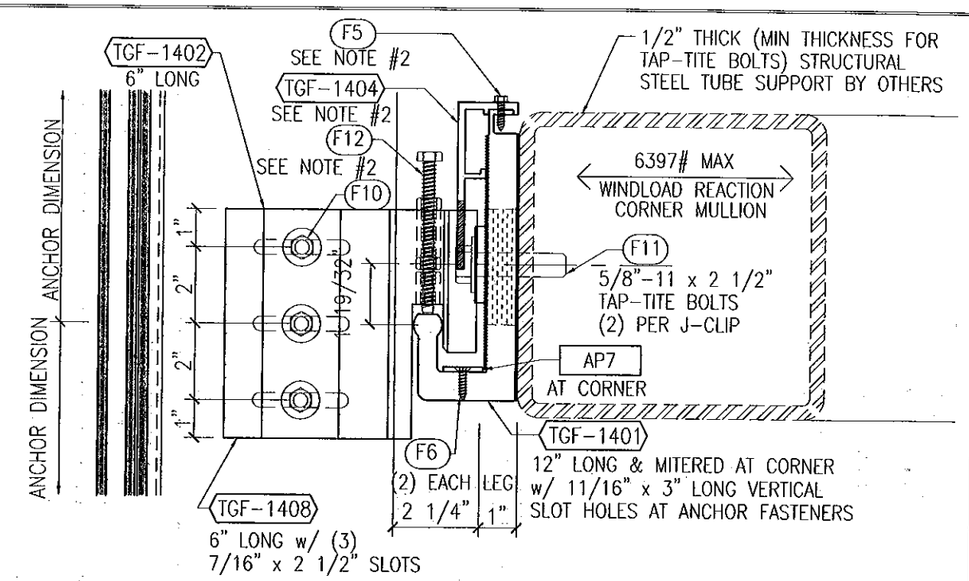

1A **DL ANCHOR AT STRUCTURAL STEEL SUPPORT (SIDE VIEW)**
SEE SHEET 13 FOR GLAZING OPTIONS
ANCHORED w/ 5/8" TAP-TITE BOLTS

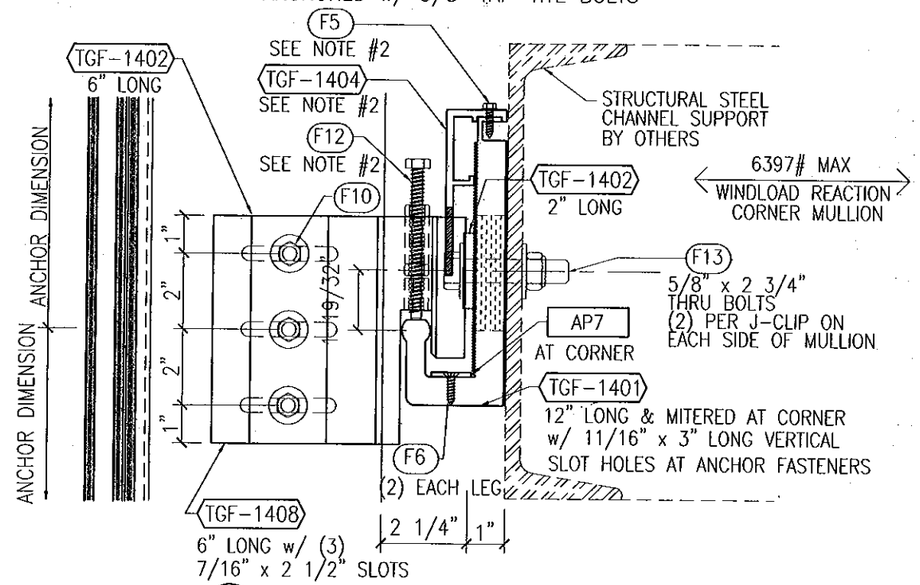

1B **DL ANCHOR AT STRUCTURAL STEEL SUPPORT (SIDE VIEW)**
SEE SHEET 13 FOR GLAZING OPTIONS
ANCHORED w/ 5/8" THRU BOLTS

NOTES:

1. SEE DETAILS ON SHEET 13 FOR BALANCE OF OUTSIDE CORNER MULLION INFORMATION AND VARIOUS GLAZING OPTIONS
2. INDICATES FASTENERS AND PARTS ARE NOT REQUIRED FOR WINDLOAD ANCHOR CONDITIONS

FOR MIAMI-DADE CO. B.C.C.O.

Approved as complying with the Florida Building Code
Date 10/20/2011
NOA# 11-0401.06
Miami-Dade Product Control
By

JEFFREY H MARSH
LICENSE
No 70018
STATE OF FLORIDA
PROFESSIONAL ENGINEER
10/5/2011

TRAINOR GLASS COMPANY
11101 13TH STREET WEST RIVIERA BEACH, FLORIDA 33404
PH. (561) 863-7078 FAX (561) 863-7088
www.trainorglass.com
ILLINOIS FLORIDA GEORGIA NEW JERSEY COLORADO TEXAS ARIZONA VIRGINIA MARYLAND
DESIGN ENGINEERING & CONSULTING Inc.
2005 N. COLLINS BLVD. - SUITE 100 RICHARDSON, TEXAS 75080
PH: 972-644-0044 FAX: 972-644-0334

REVISIONS

NO.	DATE	BY

Date	Scale
3-3-11	HALF

Drawing No
4326438

Drawing Title
113PSF LARGE MISSILE IMPACT ANCHOR DETAILS

Sheet No
25 / 44

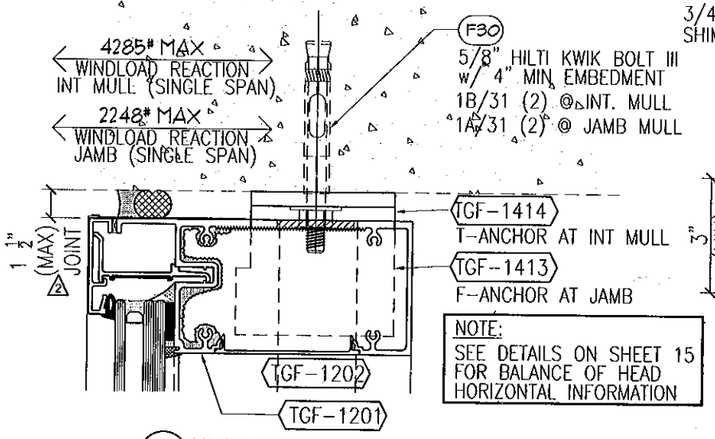

NOTE:
SEE DETAILS ON SHEET 15 FOR BALANCE OF HEAD HORIZONTAL INFORMATION

1 HEAD AT ANCHOR
(SEE SHEET 15 FOR GLAZING OPTIONS)
ANCHORED w/ 5/8" EXPANSION BOLT

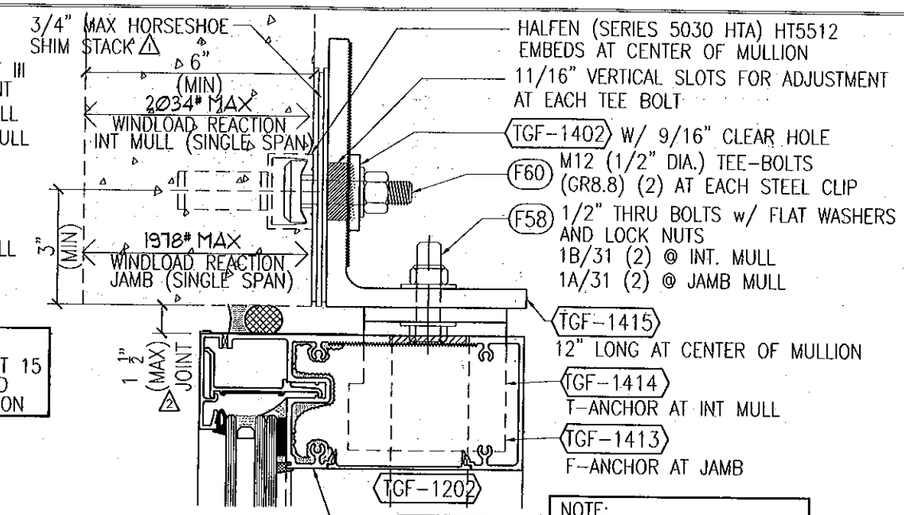

NOTE:
SEE DETAILS ON SHEET 15 FOR BALANCE OF HEAD HORIZONTAL INFORMATION

4 HEAD ANCHOR
(SEE SHEET 15 FOR GLAZING OPTIONS)
ANCHORED w/ HALFEN EMBED

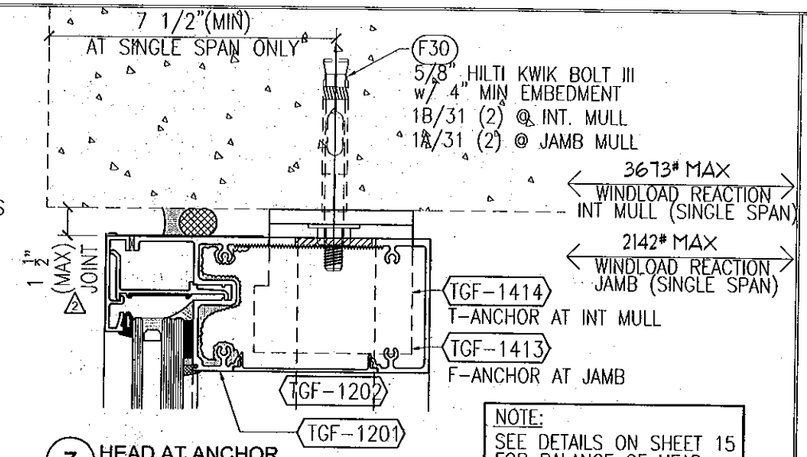

NOTE:
SEE DETAILS ON SHEET 15 FOR BALANCE OF HEAD HORIZONTAL INFORMATION

7 HEAD AT ANCHOR
(SEE SHEET 15 FOR GLAZING OPTIONS)
ANCHORED w/ 5/8" EXPANSION BOLT

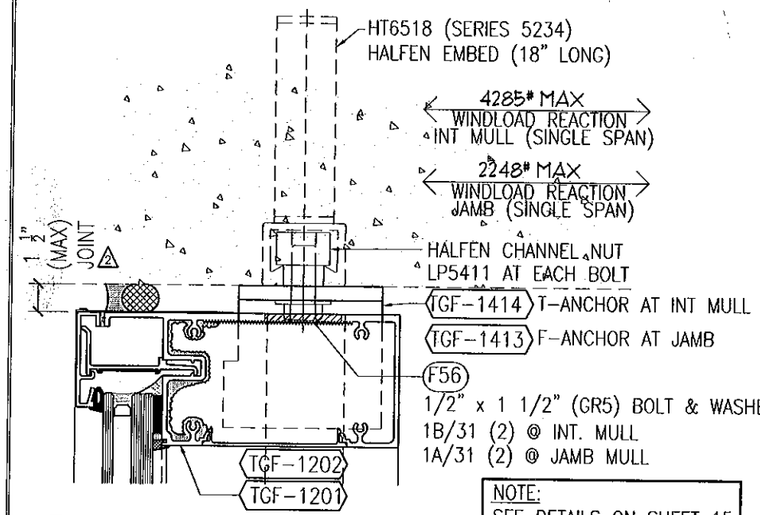

NOTE:
SEE DETAILS ON SHEET 15 FOR BALANCE OF HEAD HORIZONTAL INFORMATION

2 HEAD AT ANCHOR
(SEE SHEET 15 FOR GLAZING OPTIONS)
ANCHORED w/ HALFEN EMBED

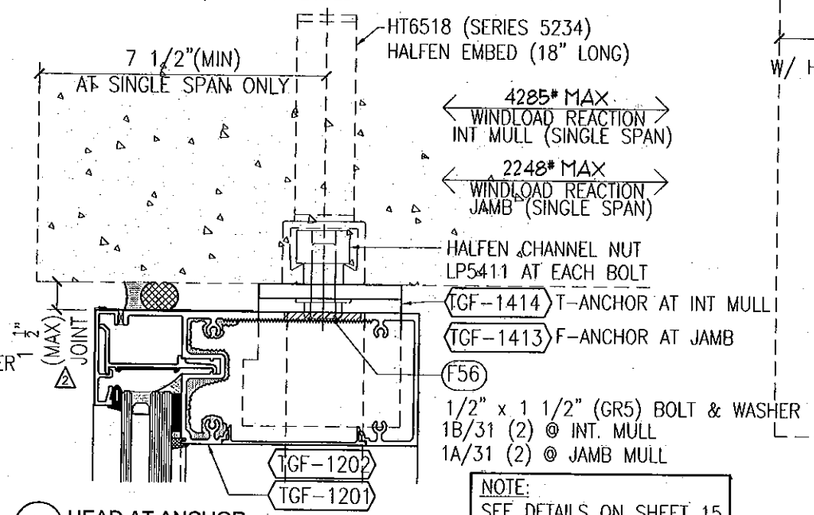

NOTE:
SEE DETAILS ON SHEET 15 FOR BALANCE OF HEAD HORIZONTAL INFORMATION

5 HEAD AT ANCHOR
(SEE SHEET 15 FOR GLAZING OPTIONS)
ANCHORED w/ HALFEN EMBED

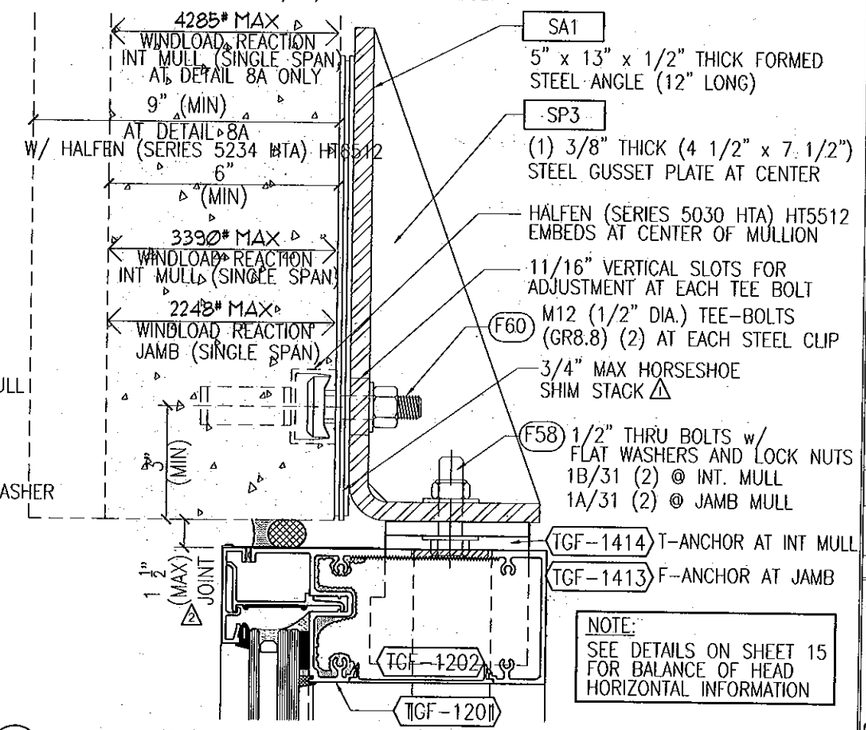

NOTE:
SEE DETAILS ON SHEET 15 FOR BALANCE OF HEAD HORIZONTAL INFORMATION

8 HEAD ANCHOR
(SEE SHEET 15 FOR GLAZING OPTIONS)
ANCHORED w/ HALFEN EMBED

8A HEAD ANCHOR AT 8" PRECAST
(SEE SHEET 15 FOR GLAZING OPTIONS)
ANCHORED w/ HALFEN EMBED

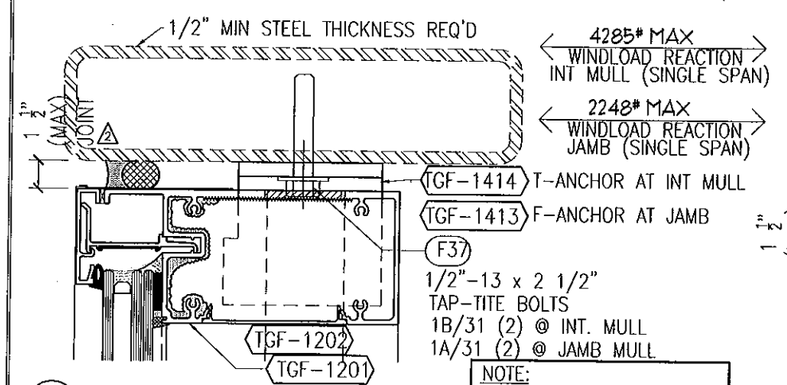

NOTE:
SEE DETAILS ON SHEET 15 FOR BALANCE OF HEAD HORIZONTAL INFORMATION

3 HEAD AT ANCHOR
(SEE SHEET 15 FOR GLAZING OPTIONS)
ANCHORED w/ 1/2" TAP-TITE BOLTS

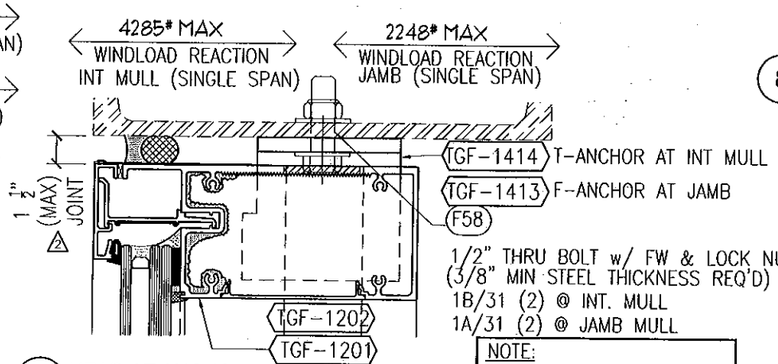

NOTE:
SEE DETAILS ON SHEET 15 FOR BALANCE OF HEAD HORIZONTAL INFORMATION

6 HEAD AT ANCHOR
(SEE SHEET 15 FOR GLAZING OPTIONS)
ANCHORED w/ 1/2" THRU BOLT

FOR MIAMI-DADE CO. B.C.C.O.

Approved as complying with the Florida Building Code
Date 10/20/2011
NOA# 11-0401.06
Miami-Dade Product Control
By

JEFFREY H MARSH
LICENSE
No 70018
STATE OF FLORIDA
PROFESSIONAL ENGINEER
10/15/2011

GLASS COMPANY
1101 13TH STREET WEST RIVIERA BEACH, FLORIDA 33404
PH. (561) 863-7078 FAX (561) 863-7088
www.trainorglass.com
TRAINOR
ILLINOIS FLORIDA GEORGIA NEW JERSEY COLORADO TEXAS ARIZONA VIRGINIA MARYLAND

NO.	DATE	BY	REVISIONS
1	6/24/11	DSC	UPDATED NOTES FOR CLARITY
2	10/14/11	DSC	UPDATED MAX. JOINT SIZE

DESIGN ENGINEERING & CONSULTING
2225 A. CULVER BLVD. - SUITE 100
DALLAS, TEXAS 75080
PH: 972-644-2640
FAX: 972-644-4284

Date	Scale
3-3-11	HALF

Drawing No
4326438

Drawing Title
113PSF
LARGE MISSILE IMPACT ANCHOR DETAILS

Sheet No
26 / 44

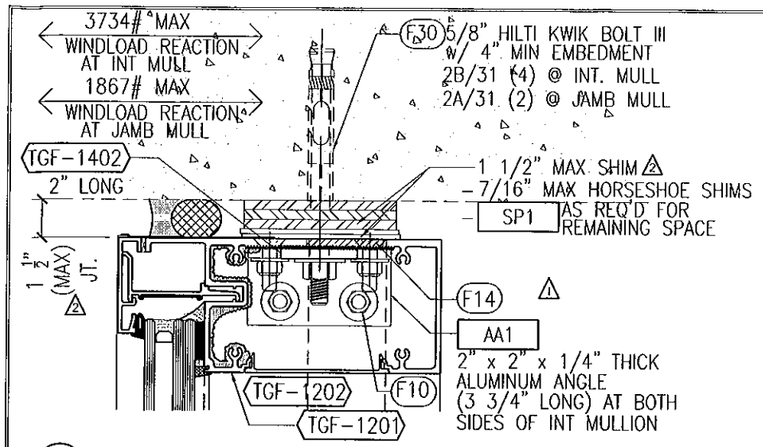

1 HEAD AT DL ANCHOR (MULTISPAN ONLY)
(SEE SHEET 15 FOR GLAZING OPTIONS)
ANCHORED w/ 5/8" EXPANSION BOLT

NOTE:
SEE DETAILS ON SHEET 15 FOR BALANCE OF HEAD HORIZONTAL INFORMATION

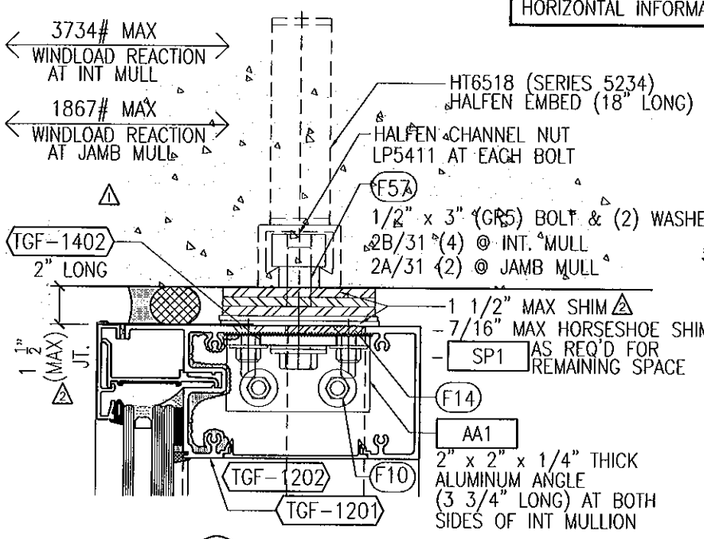

2 HEAD AT DL ANCHOR (MULTISPAN ONLY)
(SEE SHEET 15 FOR GLAZING OPTIONS)
ANCHORED w/ HALFEN EMBED

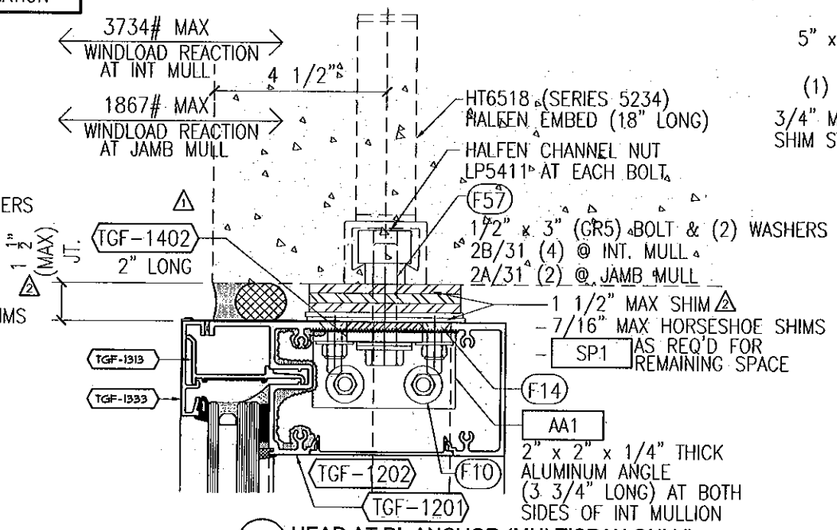

5 HEAD AT DL ANCHOR (MULTISPAN ONLY)
(SEE SHEET 15 FOR GLAZING OPTIONS)
ANCHORED w/ HALFEN EMBED

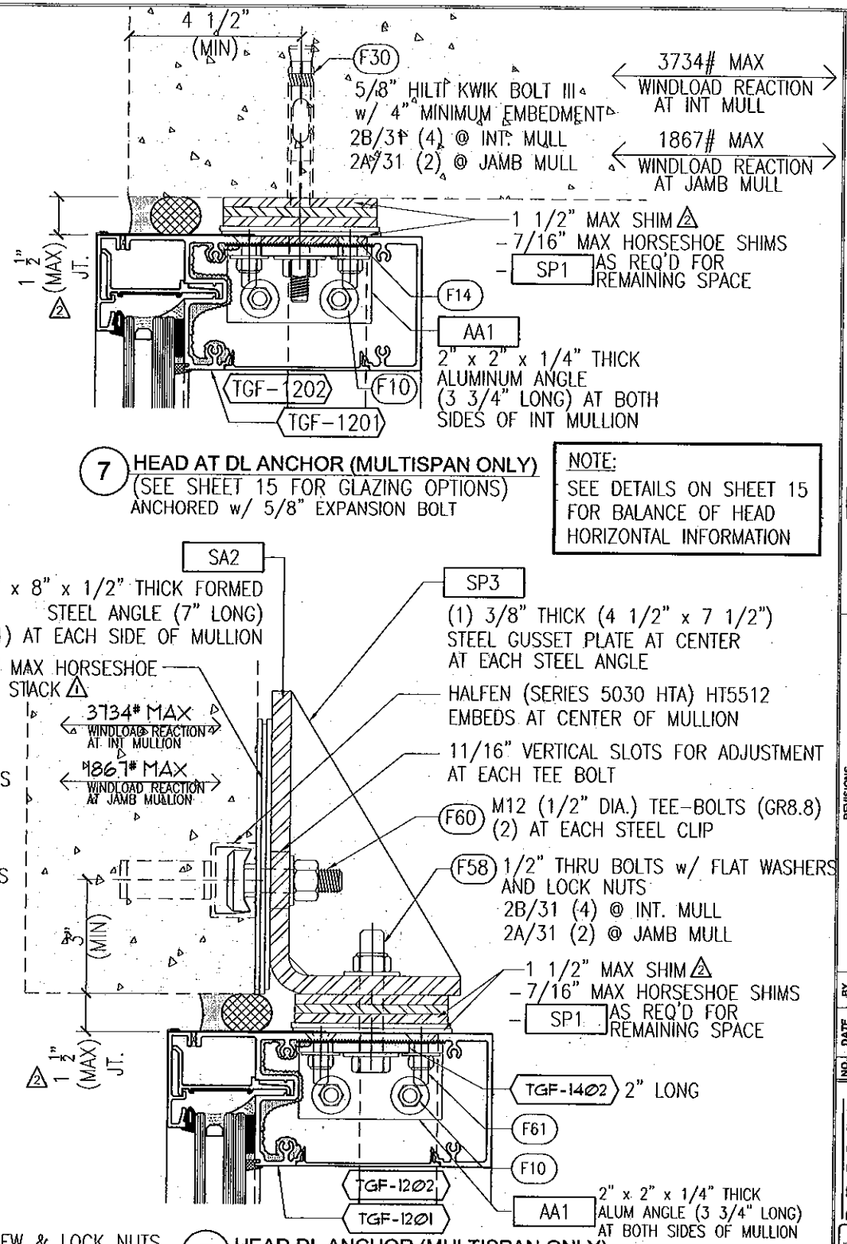

7 HEAD AT DL ANCHOR (MULTISPAN ONLY)
(SEE SHEET 15 FOR GLAZING OPTIONS)
ANCHORED w/ HALFEN EMBED

NOTE:
SEE DETAILS ON SHEET 15 FOR BALANCE OF HEAD HORIZONTAL INFORMATION

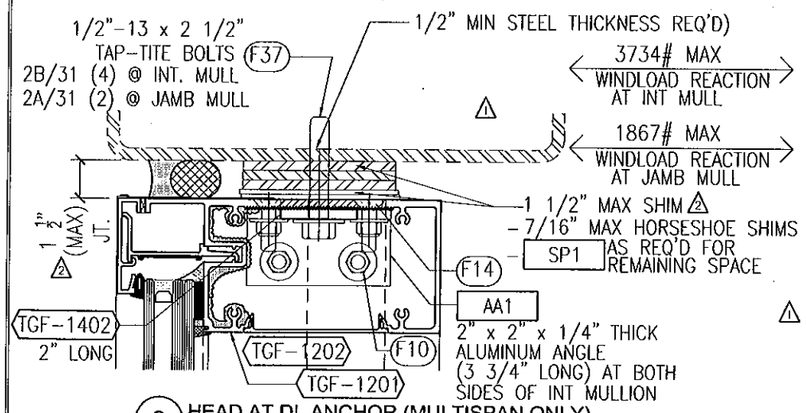

3 HEAD AT DL ANCHOR (MULTISPAN ONLY)
(SEE SHEET 15 FOR GLAZING OPTIONS)
ANCHORED w/ 1/2" TAP-TITE BOLTS

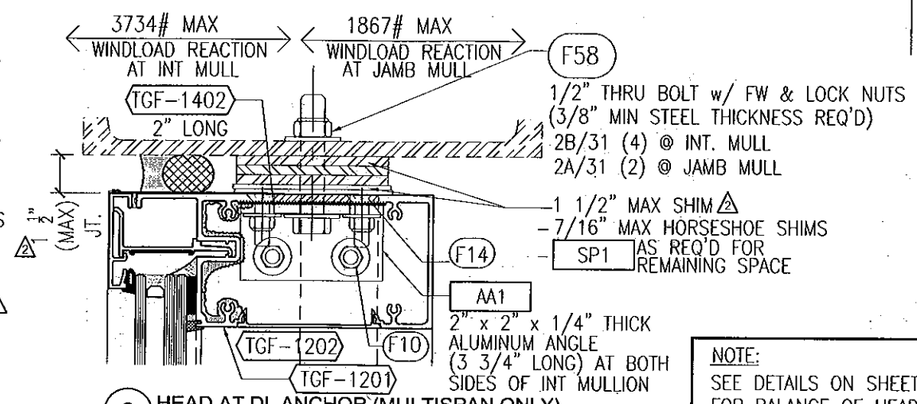

6 HEAD AT DL ANCHOR (MULTISPAN ONLY)
(SEE SHEET 15 FOR GLAZING OPTIONS)
ANCHORED w/ 1/2" THRU BOLTS

NOTE:
SEE DETAILS ON SHEET 15 FOR BALANCE OF HEAD HORIZONTAL INFORMATION

FOR MIAMI-DADE CO. B.C.C.O.

Approved as complying with the Florida Building Code
Date 10/20/2011
NOA# 11-0401.06
Miami Dade Product Control
By

JEFFREY H MARSH
LICENSE
No 70018
STATE OF FLORIDA
PROFESSIONAL ENGINEER
10/5/2011

TRAINOR GLASS COMPANY
1101 13TH STREET WEST · RIVIERA BEACH, FLORIDA 33404
PH. (561) 863-7078 FAX (561) 863-7088
www.trainorglass.com
ILLINOIS FLORIDA GEORGIA NEW JERSEY COLORADO TEXAS ARIZONA VIRGINIA MARYLAND

REVISIONS

NO.	DATE	BY	DESC.
1	8/14/11		UPDATED NOTES PER WMB
2	10/06/11		UPDATED SHK JAMB SIZE AND SHIM NOTES
3			
4			
5			

DESIGN ENGINEERING & CONSULTING Inc
2555 N. COLLINS BLVD. · SUITE 100
RICHARDSON, TEXAS 75080
PH: 972-644-3640
FAX: 972-644-6294

Date	Scale
3-3-11	HALF

Drawing No
4326438

Drawing Title
113PSF LARGE MISSILE IMPACT ANCHOR DETAILS

Sheet No
27 /44

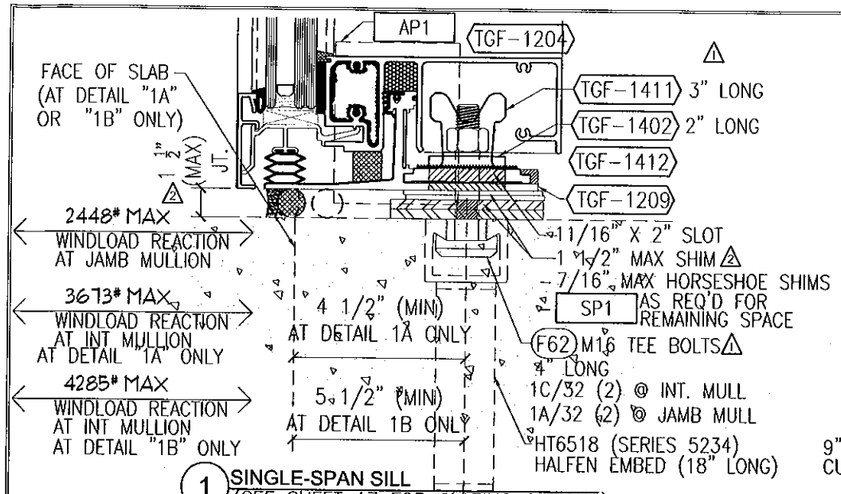

1 SINGLE-SPAN SILL
(SEE SHEET 17 FOR GLAZING OPTIONS)
ANCHORED w/ HALFEN EMBED

1A SINGLE-SPAN SILL W/ SLAB EDGE
ANCHORED w/ HALFEN EMBED

1B SINGLE-SPAN SILL W/ SLAB EDGE
ANCHORED w/ HALFEN EMBED

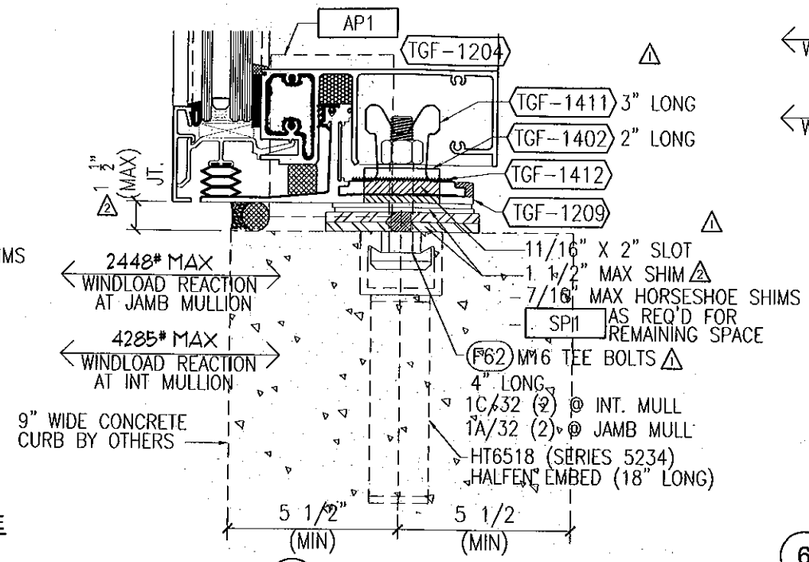

4 SINGLE-SPAN SILL
(SEE SHEET 17 FOR GLAZING OPTIONS)
ANCHORED w/ HALFEN EMBED

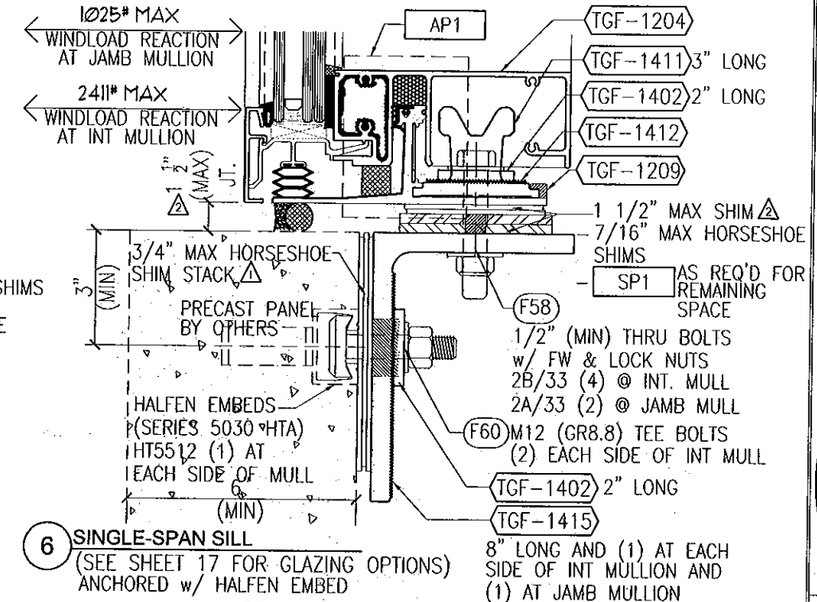

6 SINGLE-SPAN SILL
(SEE SHEET 17 FOR GLAZING OPTIONS)
ANCHORED w/ HALFEN EMBED

8" LONG AND (1) AT EACH SIDE OF INT MULLION AND (1) AT JAMB MULLION W/ 9/16" VERTICAL SLOTS

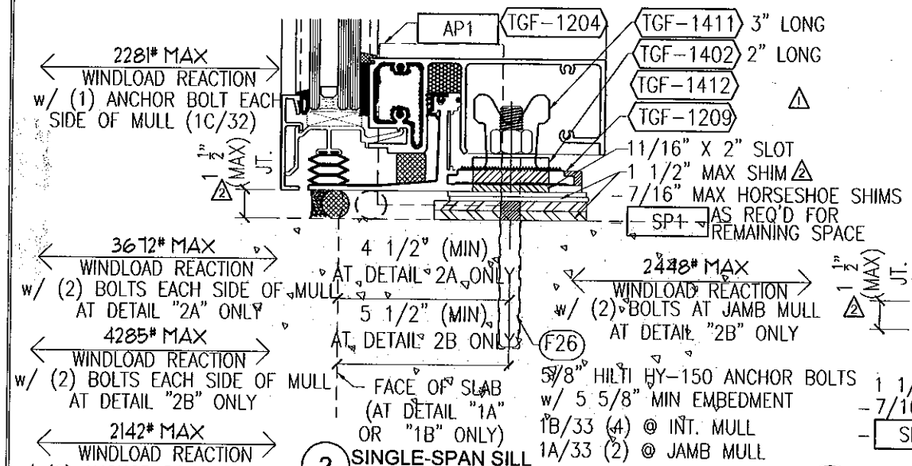

2 SINGLE-SPAN SILL
(SEE SHEET 17 FOR GLAZING OPTIONS)
ANCHORED w/ 5/8" EPOXY ANCHOR BOLT

2A SINGLE-SPAN SILL
ANCHORED w/ 5/8" EPOXY BOLT

2B SINGLE-SPAN SILL
ANCHORED w/ 5/8" EPOXY BOLT

NOTE:
SEE DETAILS ON SHEET 17 FOR BALANCE OF SINGLE SPAN HORIZONTAL INFORMATION

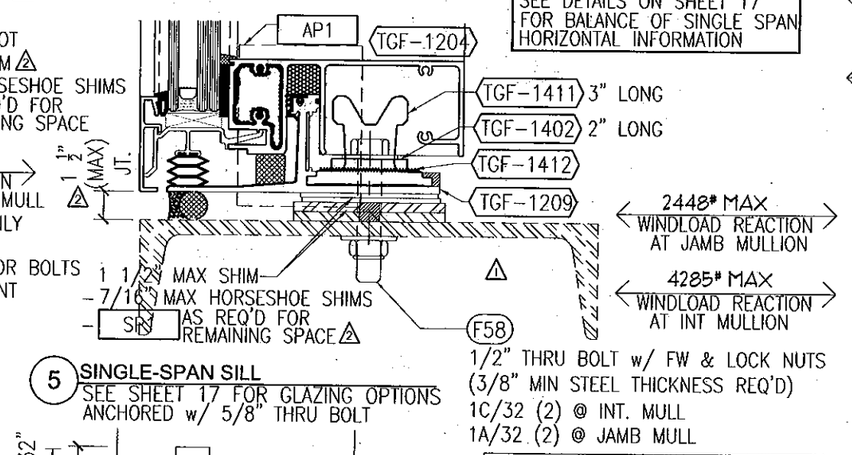

5 SINGLE-SPAN SILL
SEE SHEET 17 FOR GLAZING OPTIONS
ANCHORED w/ 5/8" THRU BOLT

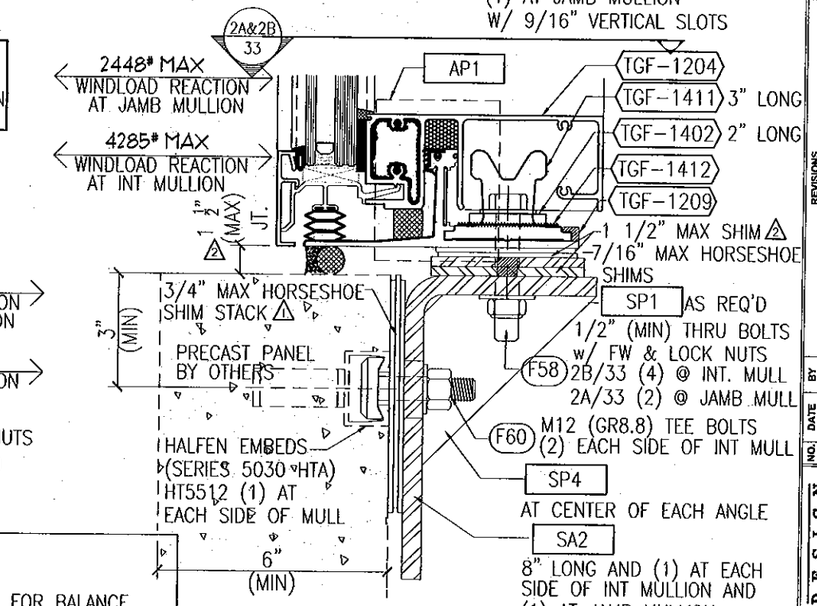

8" LONG AND (1) AT EACH SIDE OF INT MULLION AND (1) AT JAMB MULLION W/ 9/16" VERTICAL SLOTS

7 SINGLE-SPAN SILL
AT PRECAST PANEL (SEE SHEET 17 FOR GLAZING OPTIONS)
ANCHORED w/ HALFEN EMBED

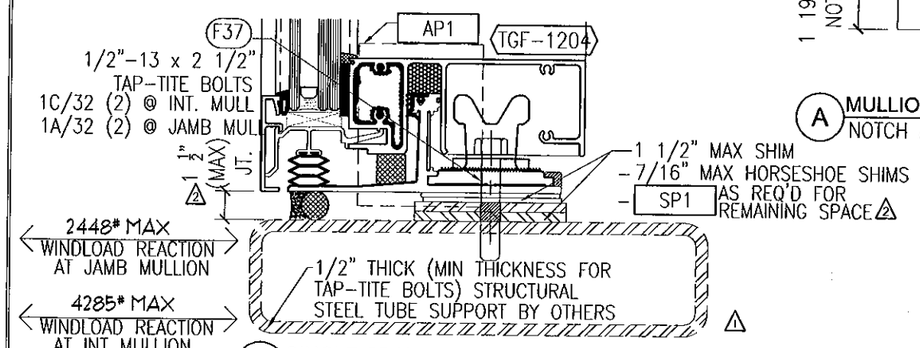

3 SINGLE-SPAN SILL
(SEE SHEET 17 FOR GLAZING OPTIONS)
ANCHORED w/ 1/2" TAP-TITE BOLT

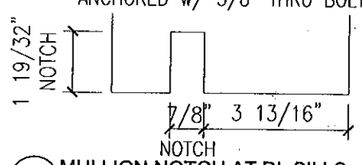

A MULLION NOTCH AT DL SILLS
NOTCH AT CHICKEN HEAD OF SILL STARTER

NOTE:
NOTCH BOTTOM OF MULLION AT CHICKEN HEAD 1 19/32" DEEP AT ALL DEADLOAD SILL LOCATIONS

NOTES:

1. SEE DETAILS ON SHEET 17 FOR BALANCE OF SINGLE SPAN SILL INFORMATION AND VARIOUS GLAZING OPTIONS
2. INDICATES FASTENERS AND PARTS ARE NOT REQUIRED FOR WINDLOAD ANCHOR CONDITIONS
3. MAX WINDLOAD REACTION = 3412# IF (2) 5/8" EPOXY ANCHOR BOLTS w/ 5 5/8" MIN EMBEDMENT ARE USED ON EACH SIDE OF MULLION – (2) AT JAMB

SA2 = 5" x 8" x 1/2" THICK FORMED STEEL ANGLE (7" LONG)

SP1 = 4" x 4" x 1/4" THICK STEEL PLATES

SP4 = 4 1/2" x 4 1/2" x 3/8" THICK STEEL GUSSET PLATE

FOR MIAMI-DADE CO. B.C.C.O.

Approved as complying with the Florida Building Code
Date 10/20/2011
NOA# 11-0401.06
Miami Dade Product
By

JEFFREY H MARSH
LICENSE
No 70018
STATE OF FLORIDA
PROFESSIONAL ENGINEER
10/5/2011

TRAINOR GLASS COMPANY
1101 13TH STREET WEST RIVIERA BEACH, FLORIDA 33404
PH. (561) 863-7078 FAX (561) 863-7088
www.trainorglass.com
ILLINOIS FLORIDA GEORGIA NEW JERSEY COLORADO TEXAS ARIZONA VIRGINIA MARYLAND

REVISIONS

NO.	DATE	BY
1	8/24/11	BEC
2	9/26/11	EBC

DESIGN ENGINEERING & CONSULTING Inc.
1205 S. CLEVELAND BLVD., SUITE 120 DENTON, TEXAS 76205
PH. 972-444-4640 FAX 972-444-4304

Date	Scale
3-3-11	HALF

Drawing No 4326438

Drawing Title 113PSF LARGE MISSILE IMPACT ANCHOR DETAILS

Sheet No 28 /44

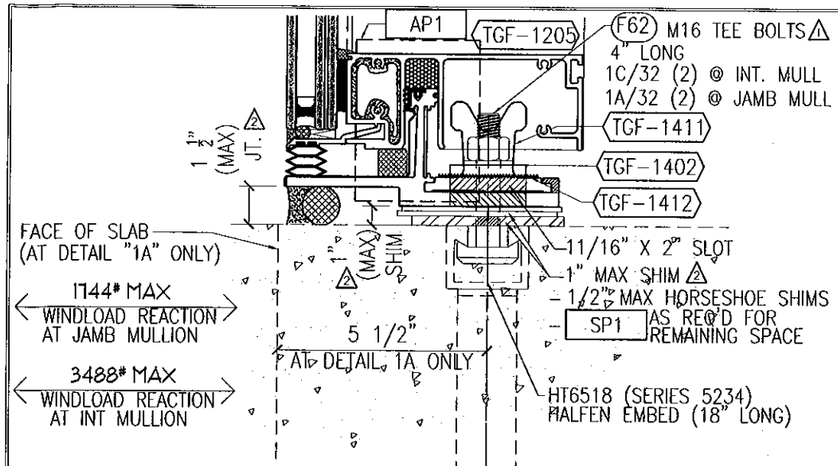

1 SILL HORIZ'L AT WL ANCHOR
(SEE SHEET 18 FOR GLAZING OPTIONS ANCHORED w/ HALFEN EMBED

1A SILL HORIZ'L AT WL ANCHOR W/ SLAB EDGE
(SEE SHEET 18 FOR GLAZING OPTIONS ANCHORED w/ HALFEN EMBED

NOTE:
SEE DETAILS ON SHEET 18 FOR BALANCE OF CURTAINWALL SILL HORIZONTAL INFORMATION

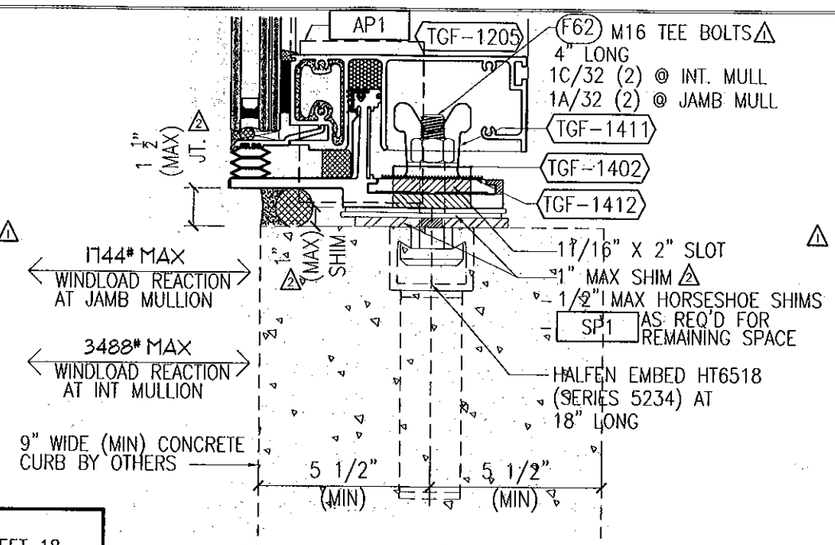

4 SILL HORIZ'L AT WL ANCHOR
(SEE SHEET 18 FOR GLAZING OPTIONS ANCHORED w/ HALFEN EMBED

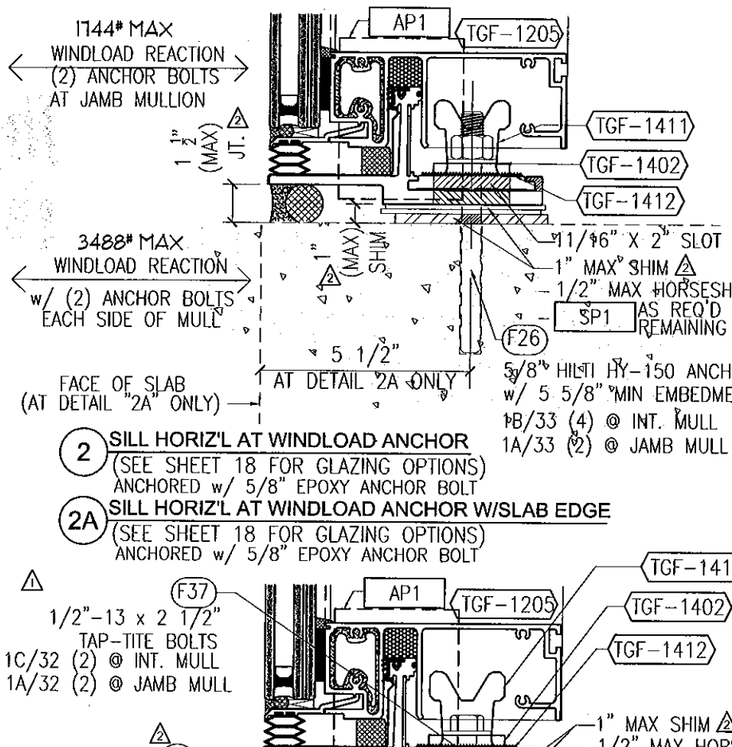

2 SILL HORIZ'L AT WINDLOAD ANCHOR
(SEE SHEET 18 FOR GLAZING OPTIONS)
ANCHORED w/ 5/8" EPOXY ANCHOR BOLT

2A SILL HORIZ'L AT WINDLOAD ANCHOR W/SLAB EDGE
(SEE SHEET 18 FOR GLAZING OPTIONS)
ANCHORED w/ 5/8" EPOXY ANCHOR BOLT

3 SILL HORIZ'L AT WINDLOAD ANCHOR
(SEE SHEET 18 FOR GLAZING OPTIONS)
ANCHORED w/ 1/2" TAP-TITE BOLT

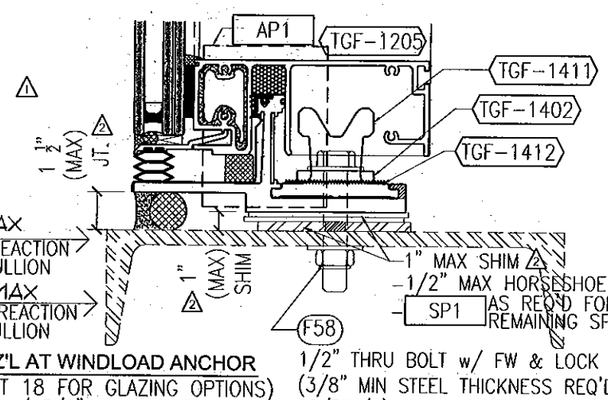

5 SILL HORIZ'L AT WINDLOAD ANCHOR
(SEE SHEET 18 FOR GLAZING OPTIONS)
ANCHORED w/ 5/8" THRU BOLT

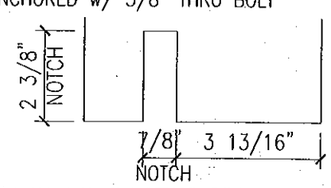

A MULLION NOTCH AT WL SILLS
NOTCH AT CHICKEN HEAD OF SILL STARTER

NOTE:
NOTCH BOTTOM OF MULLION AT CHICKEN HEAD 2 3/8" DEEP AT ALL WINDLOAD SILL LOCATIONS

NOTES:

1. SEE DETAILS ON SHEET 18 FOR BALANCE OF CURTAINWALL SILL INFORMATION AND VARIOUS GLAZING OPTIONS
2. INDICATES FASTENERS AND PARTS ARE NOT REQUIRED FOR WINDLOAD ANCHOR CONDITIONS
3. MAX WINDLOAD REACTION = 3412# IF (2) 5/8" EPOXY ANCHOR BOLTS w/ 5 5/8" MIN EMBEDMENT ARE USED ON EACH SIDE OF MULLION – (2) AT JAMB

SA2 = 5" x 8" x 1/2" THICK FORMED STEEL ANGLE (7" LONG)

SP1 = 4" x 4" x 1/4" THICK STEEL PLATES

SP4 = 4 1/2" x 4 1/2" x 3/8" THICK STEEL GUSSET PLATE

NOTE:
SEE DETAILS ON SHEET 18 FOR BALANCE OF CURTAINWALL SILL HORIZONTAL INFORMATION

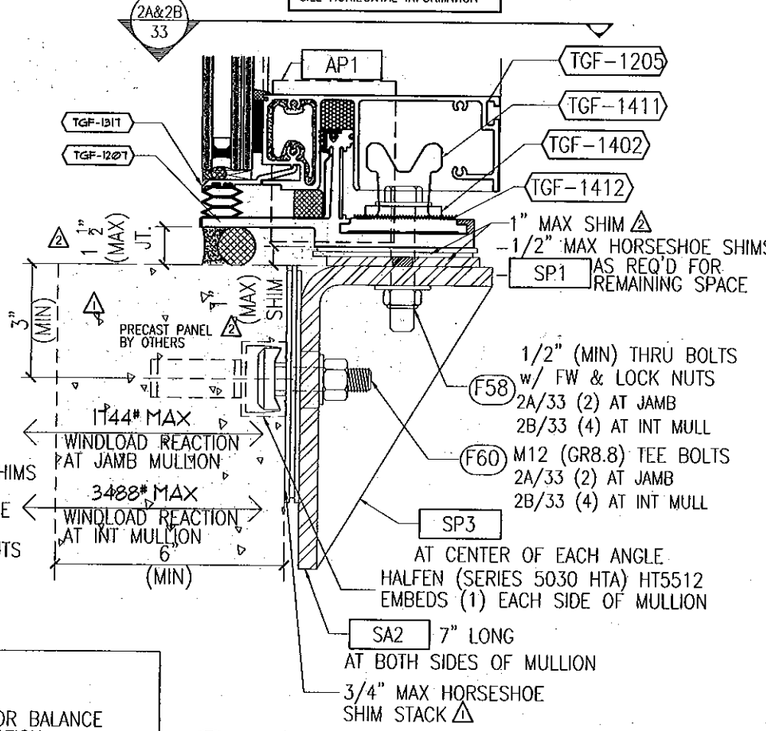

6 SILL HORIZ'L AT WL ANCHOR
AT PRECAST PANEL (SEE SHEET 18 FOR GLAZING OPTIONS)
ANCHORED w/ HALFEN EMBED

FOR MIAMI-DADE CO. B.C.C.O.

Approved as complying with the Florida Building Code
Date 10/20/2011
NOA# 11-0401.06
Miami-Dade Product Control
By

JEFFREY H MARSH
LICENSE
No 70018
STATE OF FLORIDA
PROFESSIONAL ENGINEER
10/5/2011

GLASS COMPANY
1101 13TH STREET WEST RIVIERA BEACH, FLORIDA 33404
PH. (561) 863-7078 FAX (561) 863-7088
www.trainorglass.com
TRAINOR
ILLINOIS FLORIDA GEORGIA NEW JERSEY COLORADO TEXAS ARIZONA VIRGINIA MARYLAND

NO.	DATE	BY	REVISIONS
1	8/24/11	BEC	ADDED 11/16" X 2" SLOT TO ANCHOR DETAILS UNDER T BOLT CALLOUT
2	10/06/11	BEC	UPDATED DWG JOINT REF. AND MINI NOTES

DESIGN ENGINEERING & CONSULTING Inc
3868 N. COLLINS BLVD., SUITE 150 RICHARDSON, TEXAS 75080
PH: 972-644-4844 FAX: 972-644-4836

Date	Scale
3-3-11	HALF

Drawing No
4326438

Drawing Title
113PSF LARGE MISSILE IMPACT ANCHOR DETAILS

Sheet No
29 / 44

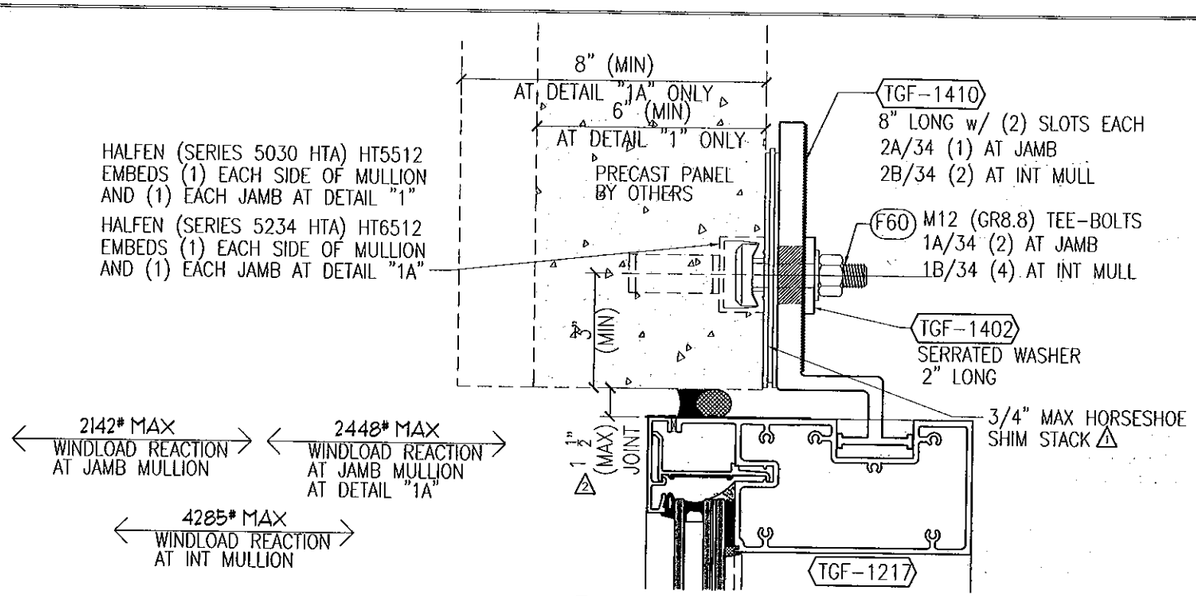

1 HEAD w/ STRAP ANCHOR
AT PRECAST PANEL
ANCHORED w/ HALFEN EMBED

1A HEAD w/ STRAP ANCHOR AT 8" PRECAST
AT PRECAST PANEL
ANCHORED w/ HALFEN EMBED

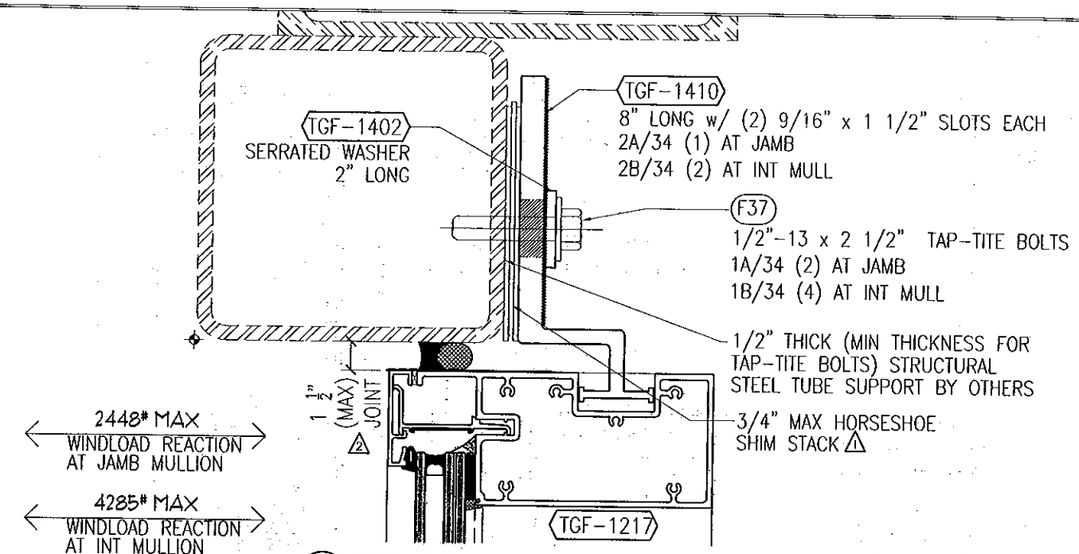

3 HEAD w/ STRAP ANCHOR
AT STRUCTURAL STEEL SUPPORT
ANCHORED w/ 1/2" TAP-TITE BOLTS

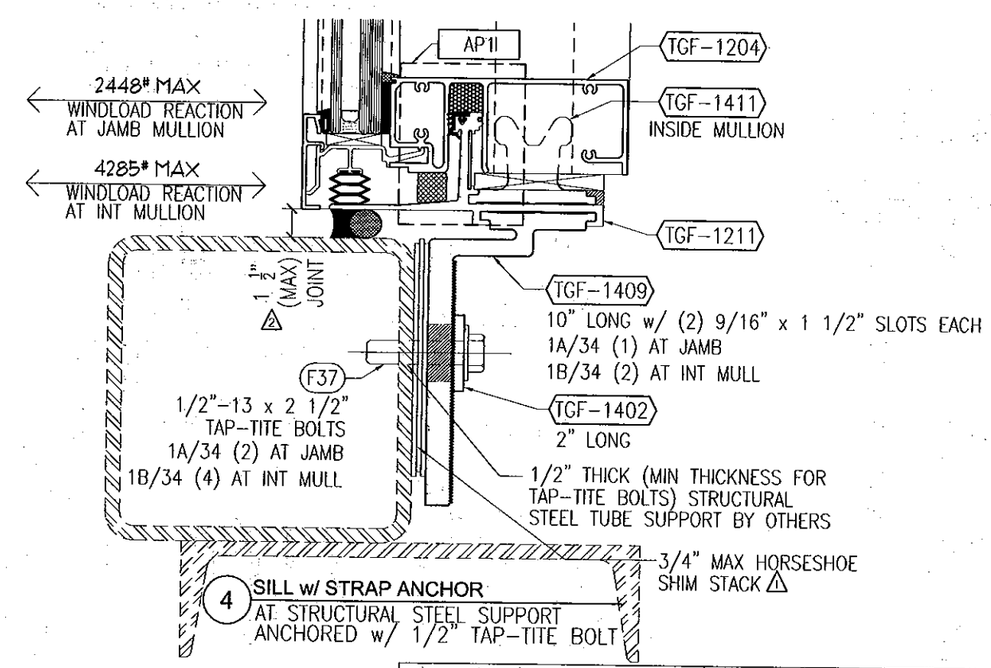

4 SILL w/ STRAP ANCHOR
AT STRUCTURAL STEEL SUPPORT
ANCHORED w/ 1/2" TAP-TITE BOLT

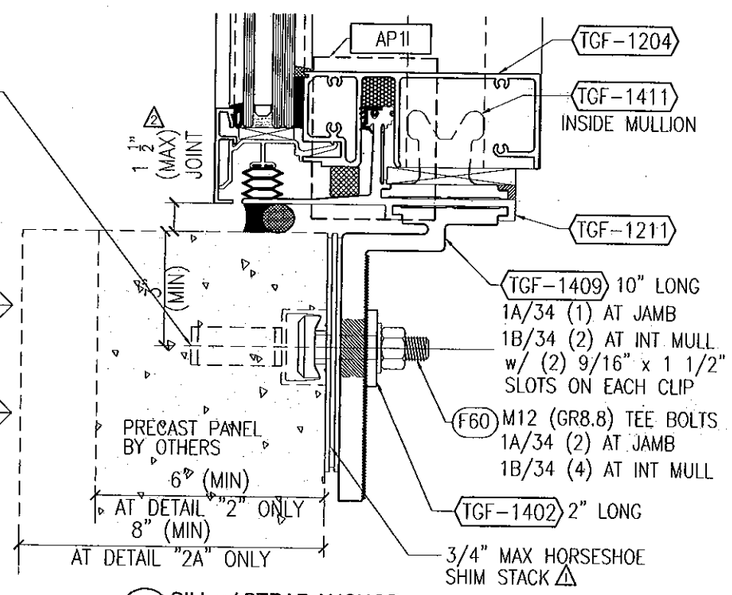

2 SILL w/ STRAP ANCHOR
AT PRECAST PANEL
ANCHORED w/ HALFEN EMBED

2A SILL w/ STRAP ANCHOR AT 8" PRECAST
AT PRECAST PANEL
ANCHORED w/ HALFEN EMBED

AP1 = 1/8" x 3 1/4" ALUMINUM END DAM PLATE (2" LONG) AT JAMBS

FOR MIAMI-DADE CO. B.C.C.O.

Approved as complying with the Florida Building Code
Date 10/20/2011
NOA# 11-0401.06
Miami Dade Product Control
By

JEFFREY H MARSH
LICENSE
No 70018
STATE OF FLORIDA
PROFESSIONAL ENGINEER
10/5/2011

TRAINOR GLASS COMPANY
1101 13TH STREET WEST RIVIERA BEACH, FLORIDA 33404
PH. (561) 863-7078 FAX (561) 863-7088
www.trainorglass.com
ILLINOIS FLORIDA GEORGIA NEW JERSEY COLORADO TEXAS ARIZONA VIRGINIA MARYLAND

REVISIONS

NO.	DATE	BY	
1	4/14/11	BBG	UPDATED NOTES FOR SHEAR
2	9/28/11	BBG	UPDATED MAX JOINT SIZE
3			
4			
5			

DESIGN ENGINEERING & CONSULTING Inc.
2905 N. COLLINS BLVD. - SUITE 100 RICHARDSON, TEXAS 75080
PH. 972-644-2640 FAX 972-644-2204

Date	Scale
3-3-11	HALF

Drawing No
4326438

Drawing Title
I 13PSF
LARGE MISSILE IMPACT ANCHOR DETAILS

Sheet No
30 /44

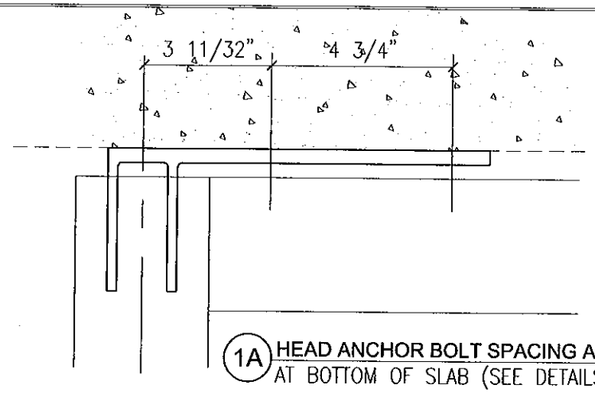

1A HEAD ANCHOR BOLT SPACING AT JAMB (FRONT VIEW)
AT BOTTOM OF SLAB (SEE DETAILS 1 & 7/26)

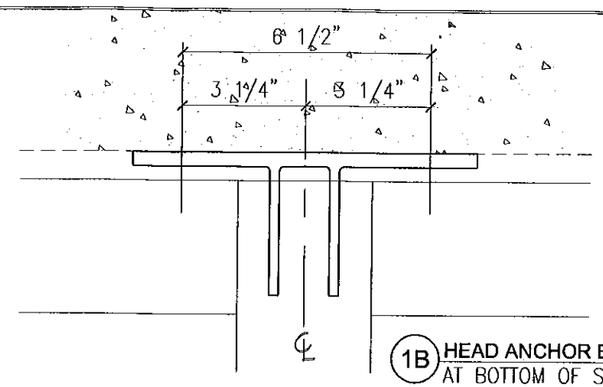

1B HEAD ANCHOR BOLT SPACING AT INT MULLION (FRONT VIEW)
AT BOTTOM OF SLAB (SEE DETAILS 1 & 7/26)

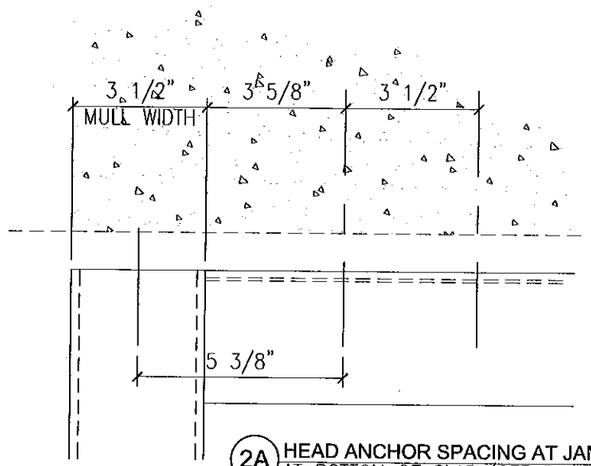

2A HEAD ANCHOR SPACING AT JAMB (FRONT VIEW)
AT BOTTOM OF SLAB (SEE DETAILS 1 & 7/27)

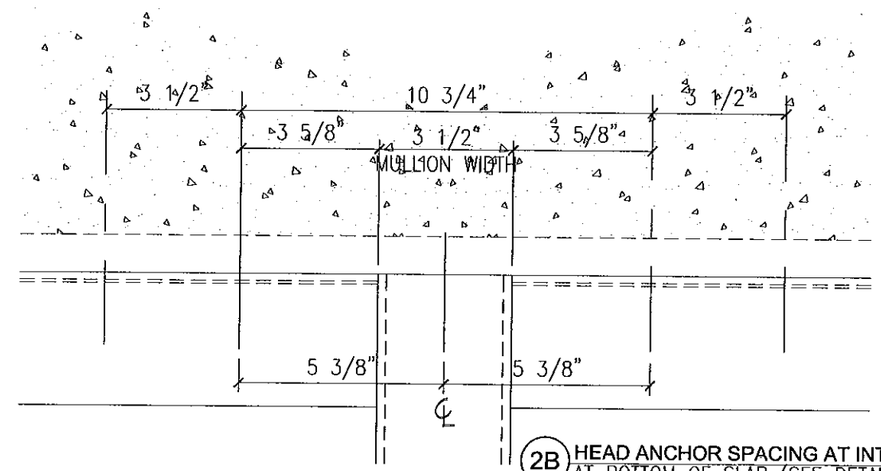

2B HEAD ANCHOR SPACING AT INT MULLION (FRONT VIEW)
AT BOTTOM OF SLAB (SEE DETAILS 1 & 7/27)

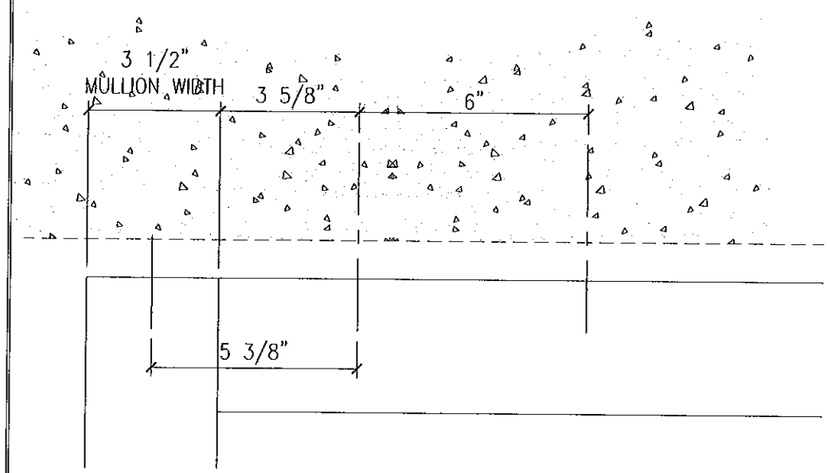

3A HEAD ANCHOR SPACING AT JAMB (FRONT VIEW)
AT BOTTOM OF SLAB (SEE DETAILS 2 & 5/27)

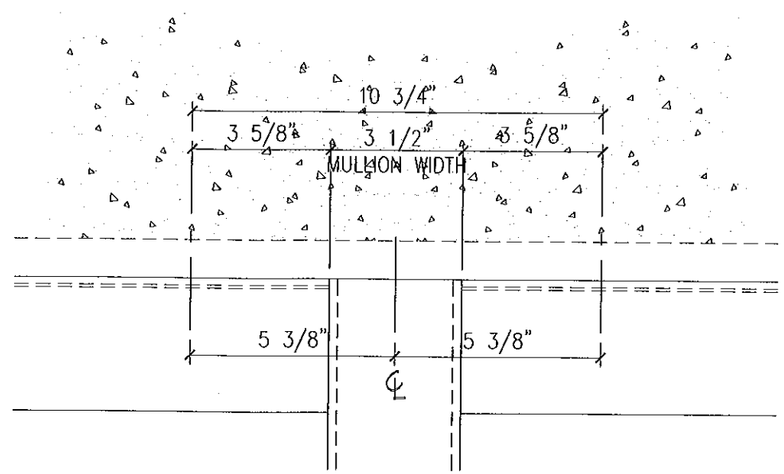

3B HEAD ANCHOR SPACING AT INT MULLION (FRONT VIEW)
AT BOTTOM OF SLAB (SEE DETAILS 2 & 5/27)

FOR MIAMI-DADE CO. B.C.C.O.

Approved as complying with the Florida Building Code
Date 10/20/2011
NOA# 11-0401.06
Miami-Dade Product Control
By

JEFFREY H MARSH
LICENSE
No 70018
STATE OF FLORIDA
PROFESSIONAL ENGINEER
10/5/2011

GLASS COMPANY
1101 13TH STREET WEST RIVIERA BEACH, FLORIDA 33404
PH. (561) 863-7078 FAX (561) 863-7088
www.trainorglass.com
TRAINOR
ILLINOIS FLORIDA GEORGIA NEW JERSEY COLORADO TEXAS ARIZONA VIRGINIA MARYLAND

REVISIONS

NO.	DATE	BY

DESIGN ENGINEERING & CONSULTING Inc.
3205 N. COLLINS BLVD. - SUITE 100
ARLINGTON, TEXAS 76006
PH: 972-444-2040
FAX: 972-444-2024

Date	Scale
3-3-11	HALF

Drawing No
4326438

Drawing Title
113PSF - LARGE MISSILE IMPACT ANCHOR LAYOUTS

Sheet No
31 / 44

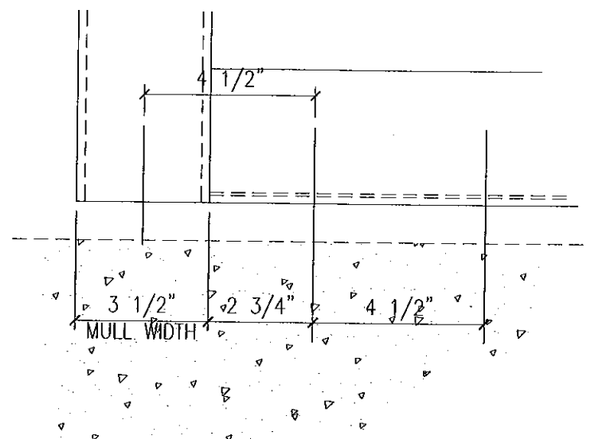

1A SILL ANCHOR SPACING AT JAMB (FRONT VIEW)
AT TOP OF SLAB (SEE DETAILS 2/29)

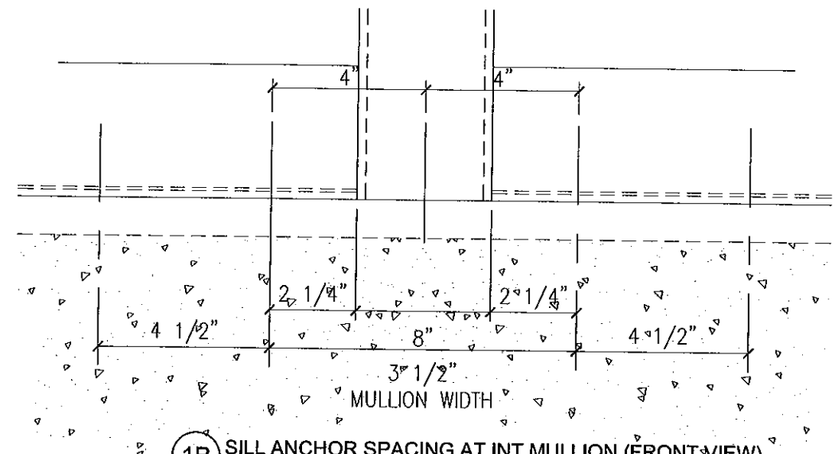

1B SILL ANCHOR SPACING AT INT MULLION (FRONT VIEW)
AT TOP OF SLAB (SEE DETAILS 2/29)

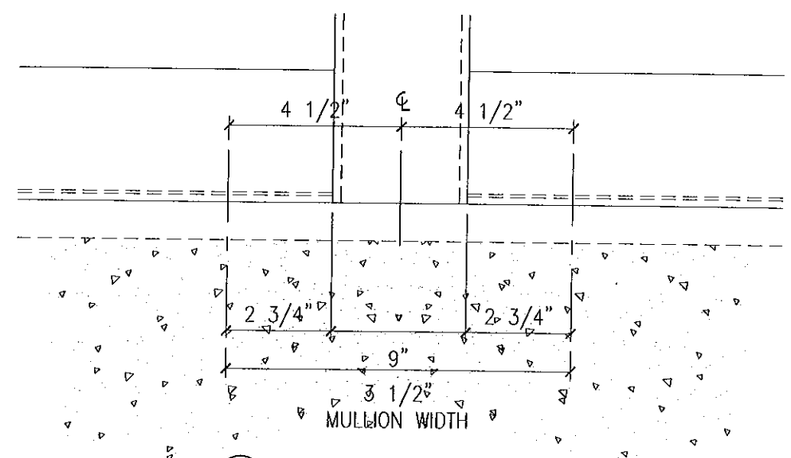

1C SILL ANCHOR SPACING AT INT MULLION (FRONT VIEW)
AT TOP OF SLAB (SEE DETAILS 1, 3, 4 & 5/29)

FOR MIAMI-DADE CO. B.C.C.O.

Approved as complying with the Florida Building Code
Date 10/20/2011
NOA# 11-0401.06
Miami Dade Product Control
By

JEFFREY H MARSH
LICENSE
No 70018
STATE OF
FLORIDA
PROFESSIONAL ENGINEER
10/5/2011

GLASS COMPANY
1101 13TH STREET WEST RIVIERA BEACH, FLORIDA 33404
PH. (561) 863-7078 FAX (561) 863-7088
www.trainorglass.com
TRAINOR
ILLINOIS FLORIDA GEORGIA NEW JERSEY COLORADO TEXAS ARIZONA VIRGINIA MARYLAND

REVISIONS

NO.	DATE	BY
1		
2		
3		
4		
5		
6		

DESIGN ENGINEERING & CONSULTING Inc.
3900 N. COLLINS BOULEVARD, SUITE 100
CORPUS CHRISTI, TEXAS 78396
PH: 361-944-8600
FAX: 361-944-8604

Date	Scale
3-3-11	HALF

Drawing No
4326438

Drawing Title
113PSF
LARGE MISSILE IMPACT
ANCHOR LAYOUTS

Sheet No
32 /44

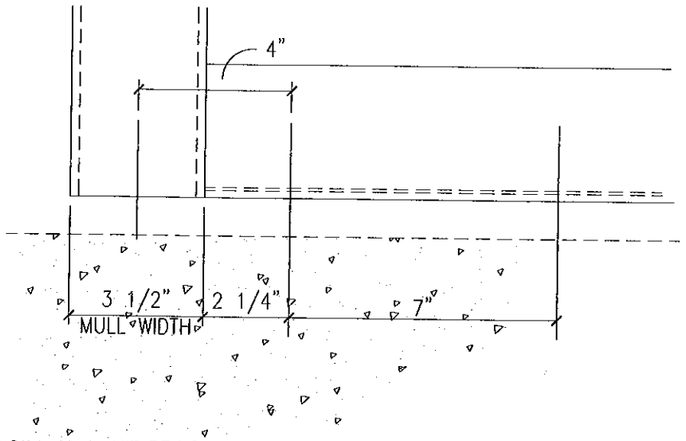

1A SILL ANCHOR SPACING AT JAMB (FRONT VIEW)
AT TOP OF SLAB (SEE DETAILS 2/29)

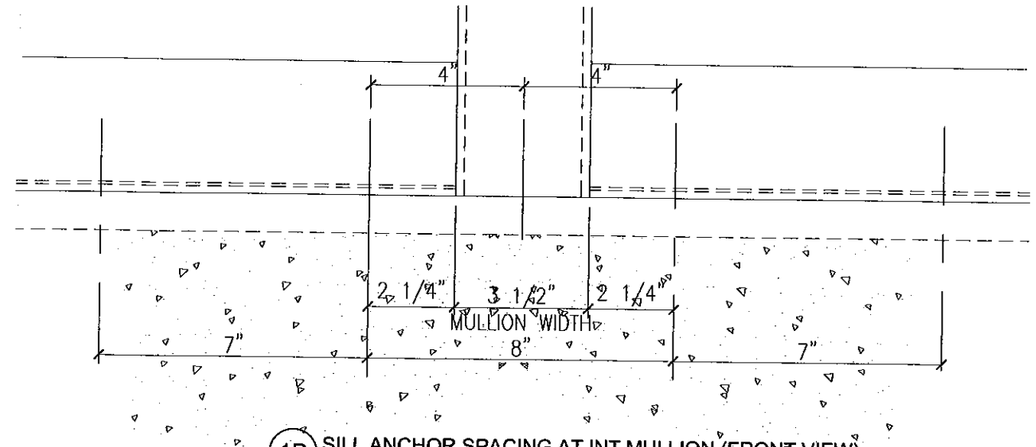

1B SILL ANCHOR SPACING AT INT MULLION (FRONT VIEW)
AT TOP OF SLAB (SEE DETAILS 2/29)

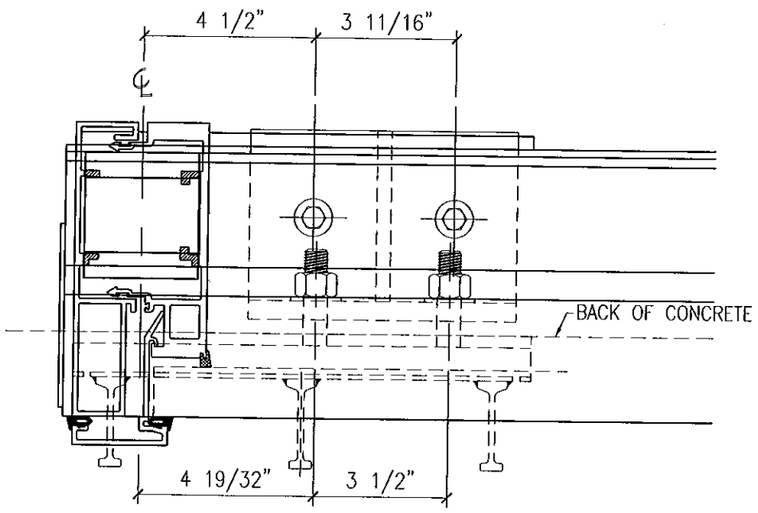

2A SILL ANCHOR SPACING AT JAMB (PLAN VIEW)
AT PRECAST PANEL & ANCHOR CLIPS (SEE DETAILS 6 & 7/28 AND 6 & 7/29)

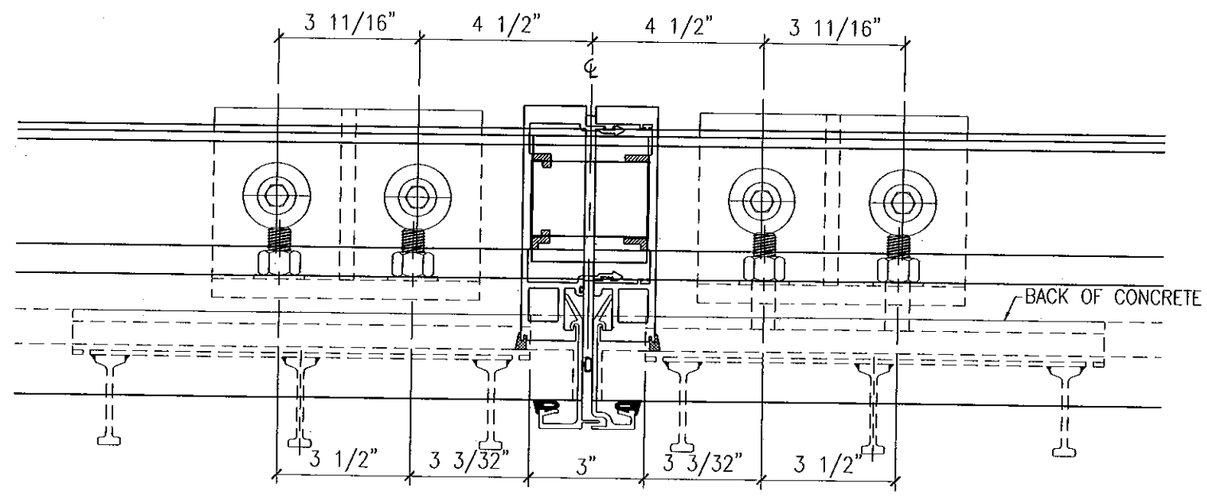

2B SILL ANCHOR AT INT MULL (PLAN VIEW)
AT PRECAST PANEL & ANCHOR CLIPS (SEE DETAILS 6 & 7/28 AND 6 & 7/29)

FOR MIAMI-DADE CO. B.C.C.O.

Approved as complying with the Florida Building Code
Date 10/20/2011
NOA# 11-0401.06
Miami Dade Product Control
By

JEFFREY H MARSH
LICENSE
No 70018
STATE OF
FLORIDA
PROFESSIONAL ENGINEER
10/5/2011

TRAINOR GLASS COMPANY
1101 13TH STREET WEST RIVIERA BEACH, FLORIDA 33404
PH. (561) 863-7078 FAX (561) 863-7088
www.trainorglass.com
ILLINOIS FLORIDA GEORGIA NEW JERSEY COLORADO TEXAS ARIZONA VIRGINIA MARYLAND

REVISIONS

NO.	DATE	BY
1		
2		
3		
4		
5		
6		

DESIGN ENGINEERING & CONSULTING Inc
2905 N. COLLINS BLVD. - SUITE 100 RICHARDSON, TEXAS 75080
PH. 972-644-0660 FAX 972-644-4234

Date	Scale
3-3-11	QUARTER

Drawing No
4326438

Drawing Title
113PSF
LARGE MISSILE IMPACT
ANCHOR LAYOUTS

Sheet No
33 / 44

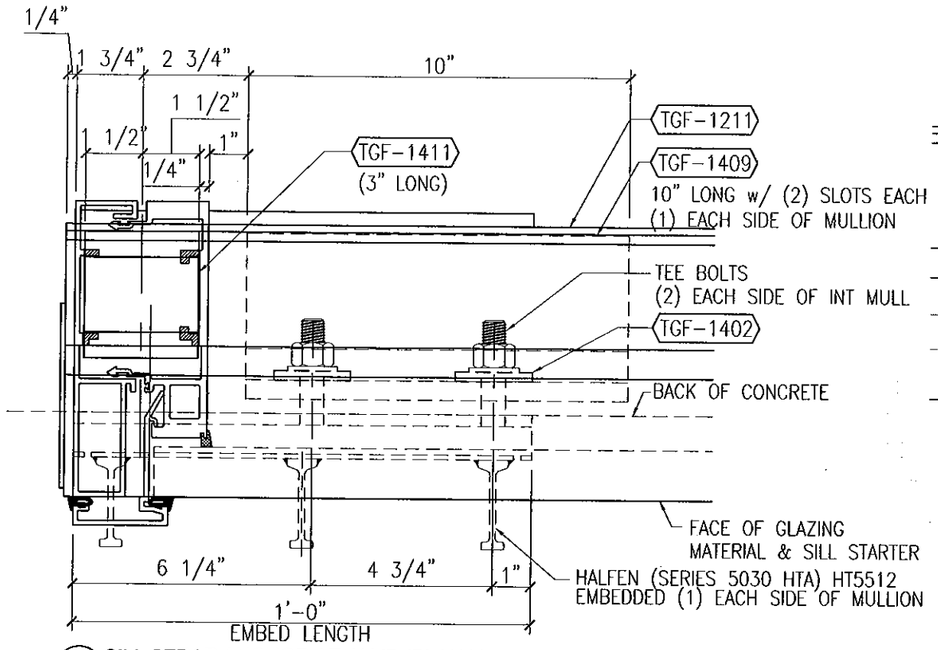

1A SILL STRAP ANCHOR AT JAMB (PLAN VIEW)
AT PRECAST PANEL & STRAP ANCHOR CLIPS (SEE DETAILS 2 & 4/30)
ANCHORED w/ HALFEN EMBED

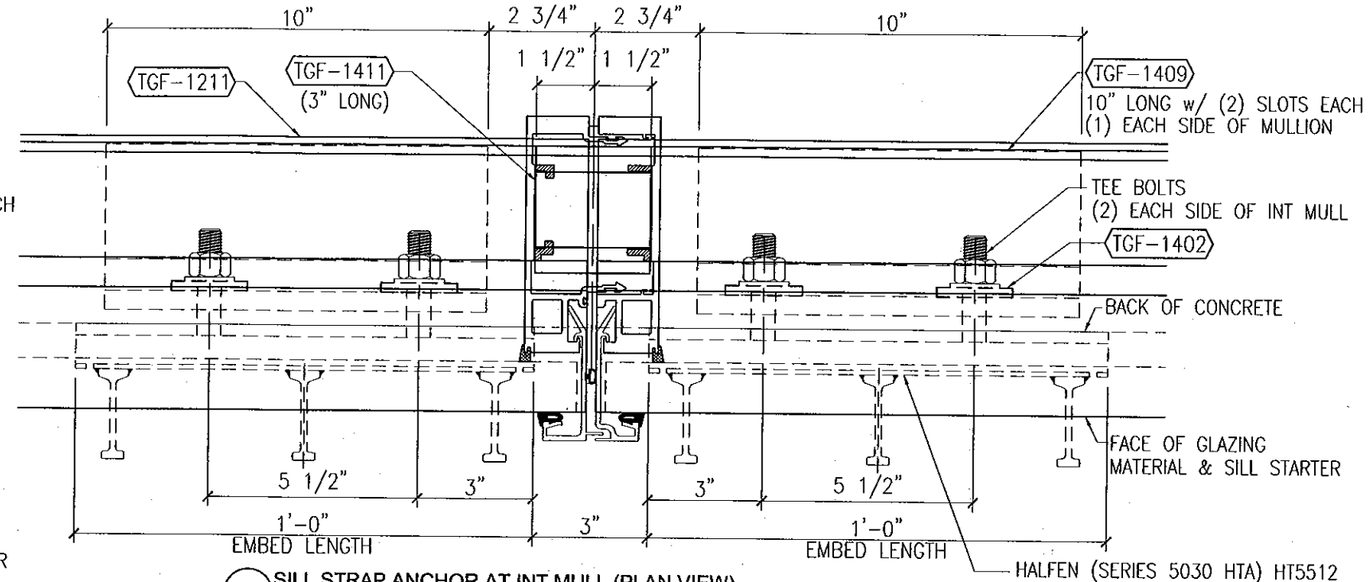

1B SILL STRAP ANCHOR AT INT MULL (PLAN VIEW)
AT PRECAST PANEL & STRAP ANCHOR CLIPS (SEE DETAILS 2 & 4/30)
ANCHORED w/ (2) HALFEN EMBEDS

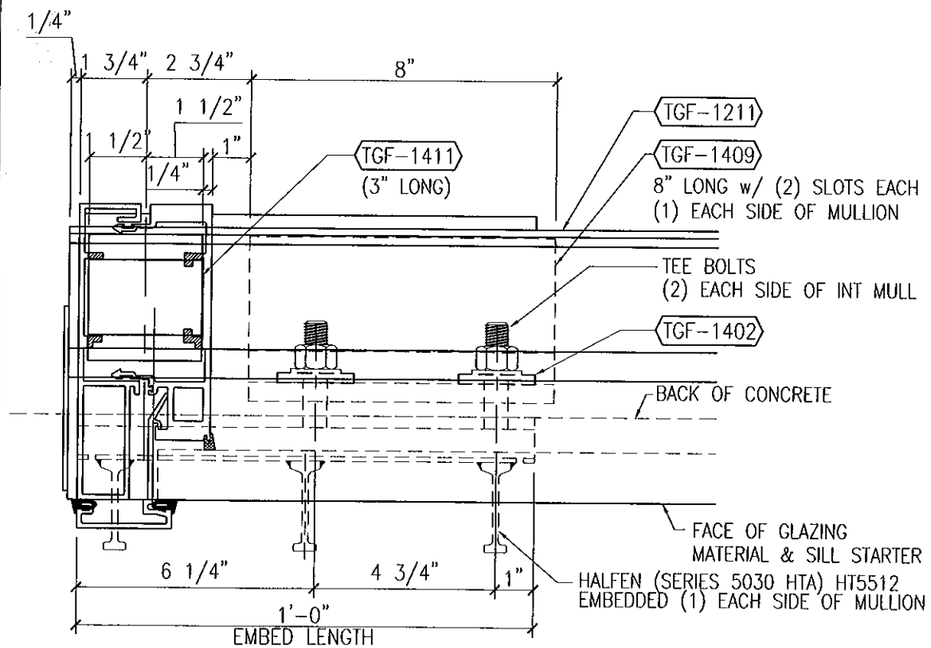

2A HEAD STRAP ANCHOR AT JAMB (PLAN VIEW)
AT PRECAST PANEL & STRAP ANCHOR CLIPS (SEE DETAILS 1 & 3/30)
ANCHORED w/ HALFEN EMBED

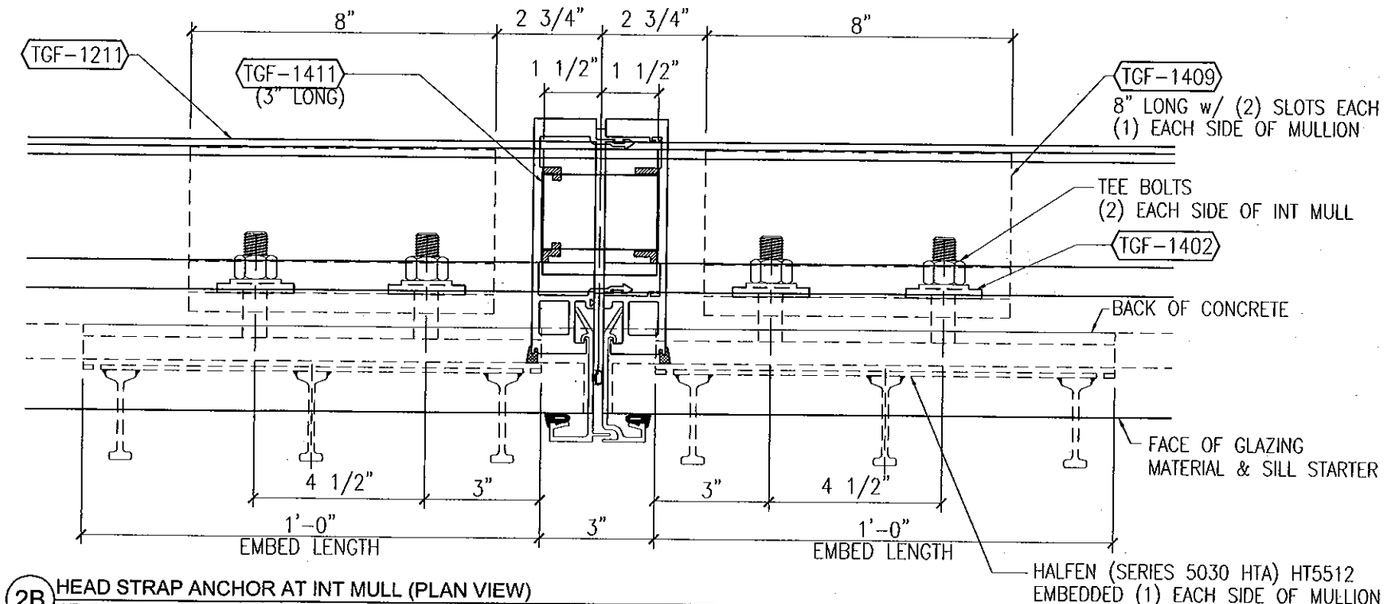

2B HEAD STRAP ANCHOR AT INT MULL (PLAN VIEW)
AT PRECAST PANEL & STRAP ANCHOR CLIPS (SEE DETAILS 1 & 3/30)
ANCHORED w/ (2) HALFEN EMBEDS

FOR MIAMI-DADE CO. B.C.C.O.

Approved as complying with the
Florida Building Code
Date 10/20/2011
NOA# 11-0401.06
Miami Dade Product Control
By

JEFFREY H MARSH
LICENSE
No 70018
STATE OF
FLORIDA
PROFESSIONAL ENGINEER
10/5/2011

TRAINOR GLASS COMPANY
1101 13TH STREET WEST RIVIERA BEACH, FLORIDA 33404
PH. (561) 863-7078 FAX (561) 863-7088
www.trainorglass.com
ILLINOIS FLORIDA GEORGIA NEW JERSEY COLORADO TEXAS ARIZONA VIRGINIA MARYLAND

REVISIONS

NO.	DATE	BY

DESIGN ENGINEERING & CONSULTING Inc.
2200 N. GRIFFIN BLVD. - SUITE 100
ROCKWALL, TEXAS 75087
PH 972-441-6040
FAX 972-441-6304

Date	Scale
3-3-11	QUARTER

Drawing No
4326438

Drawing Title
113PSF
LARGE MISSILE IMPACT
ANCHOR LAYOUTS

Sheet No
34 /44

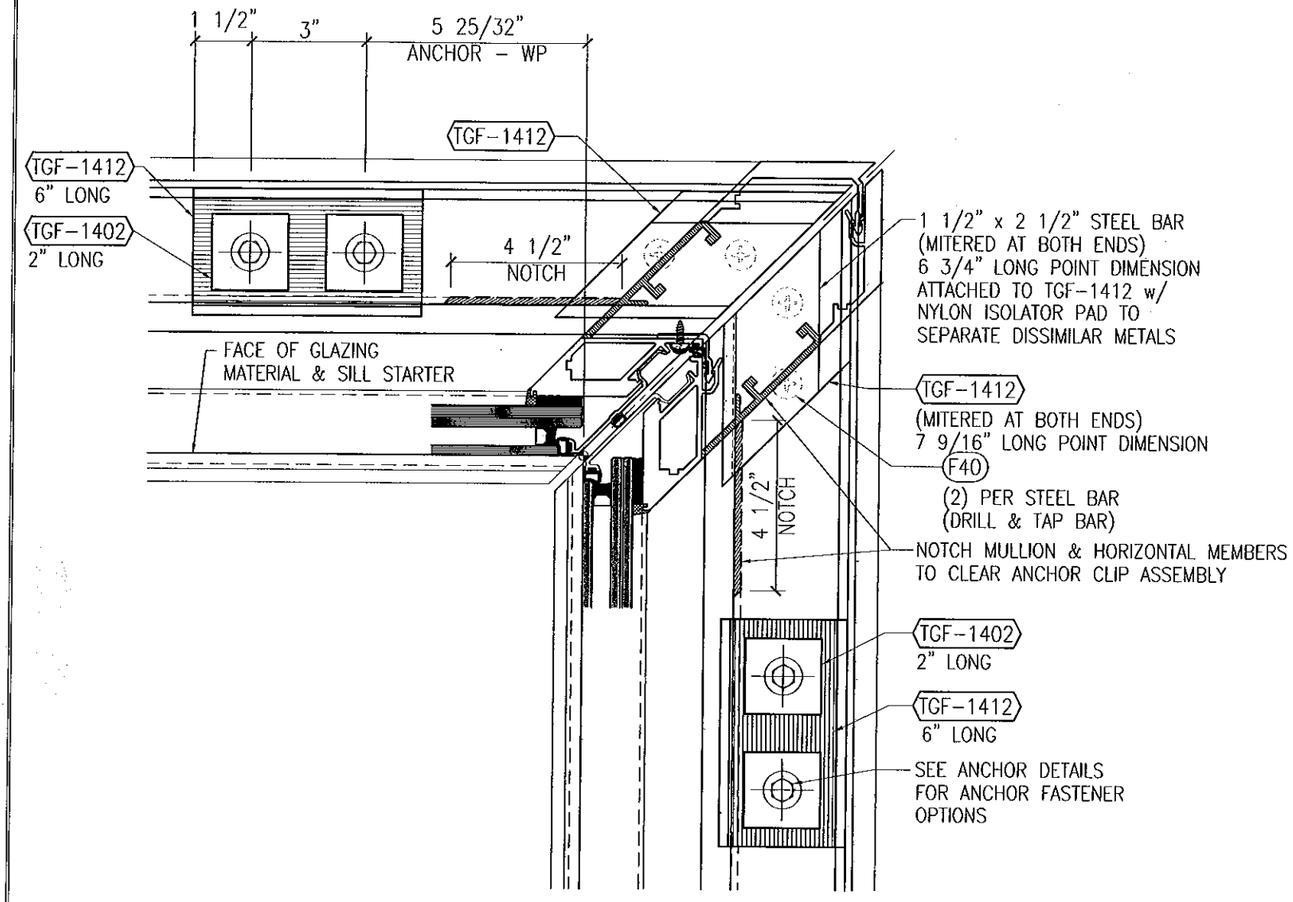

1 SILL ANCHOR AT INSIDE CORNER MULL (PLAN VIEW)
AT SINGLE-SPAN & MULTI-SPAN SILLS

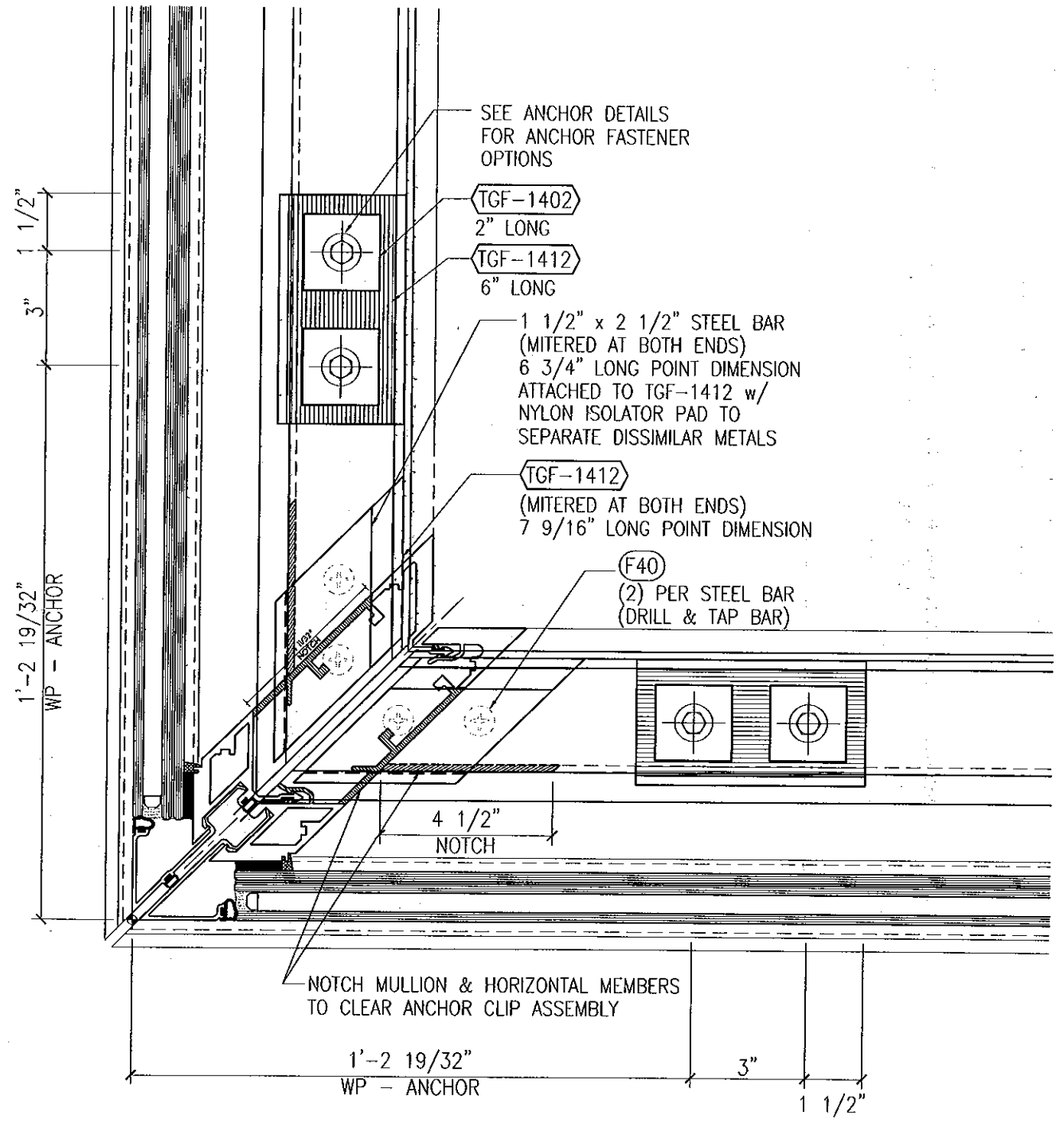

2 SILL ANCHOR AT OUTSIDE CORNER MULL (PLAN VIEW)
AT SINGLE-SPAN & MULTI-SPAN SILLS

FOR MIAMI-DADE CO. B.C.C.O.

Approved as complying with the
Florida Building Code
Date 10/20/2011
NOA# 11-0401.06
Miami Dade Product Control
By

JEFFREY H MARSH
LICENSE
No 70018
STATE OF
FLORIDA
PROFESSIONAL ENGINEER
10/5/2011

GLASS COMPANY
1101 13TH STREET WEST RIVIERA BEACH, FLORIDA 33404
PH. (561) 863-7078 FAX (561) 863-7088
www.trainorglass.com
TRAINOR
ILLINOIS FLORIDA GEORGIA NEW JERSEY COLORADO TEXAS ARIZONA VIRGINIA MARYLAND

REVISIONS

NO.	DATE	BY

DESIGN ENGINEERING & CONSULTING Inc.
2905 N. CHARLES BAYS, - SUITE 100
PEARLAND, TEXAS 77600
PH: 972-544-6040
FAX: 972-544-6304

Date	Scale
3-3-11	QUARTER

Drawing No
4326438

Drawing Title
113PSF
LARGE MISSILE IMPACT
ANCHOR LAYOUTS

Sheet No
35 / 44

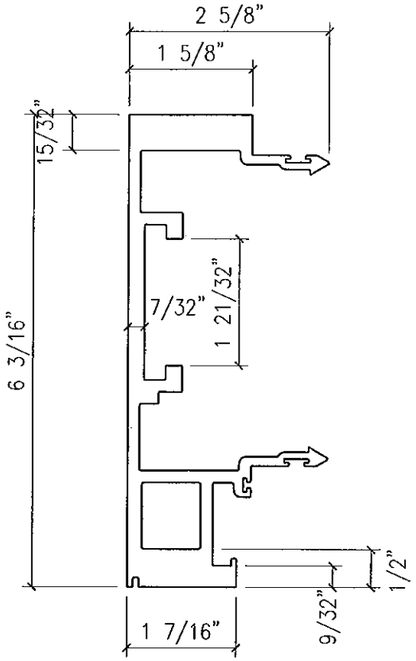

EXTRUSION NO:	TGF-1101
DESCRIPTION:	MALE MULLION
Ixx	16.527
Sxx	5.299
ALLOY	6063-T6

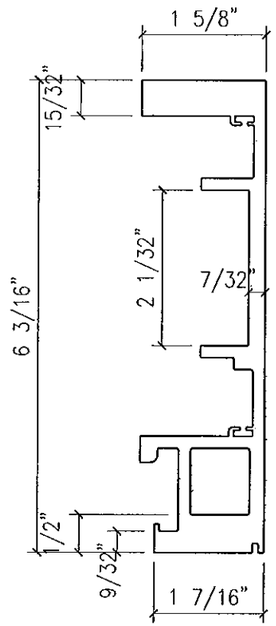

EXTRUSION NO:	TGF-1102
DESCRIPTION:	FEMALE MULLION
Ixx	15.478
Sxx	4.865
ALLOY	6063-T6

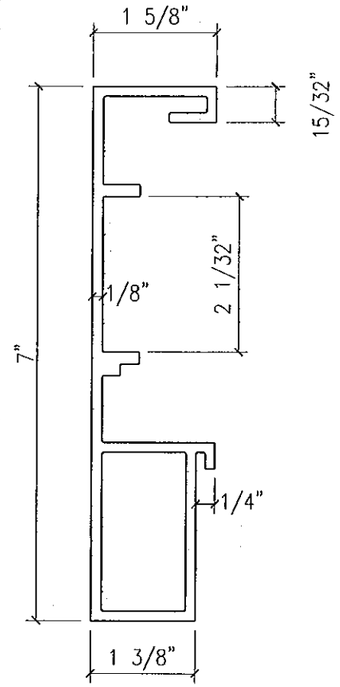

EXTRUSION NO:	TGF-1103
DESCRIPTION:	JAMB MULLION (FOR 9/16" GLAZING)
Ixx	.
Sxx	.
ALLOY	6063-T6

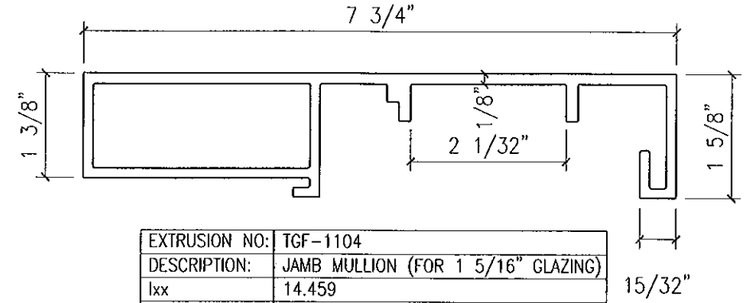

EXTRUSION NO:	TGF-1104
DESCRIPTION:	JAMB MULLION (FOR 1 5/16" GLAZING)
Ixx	14.459
Sxx	3.608
ALLOY	6063-T6

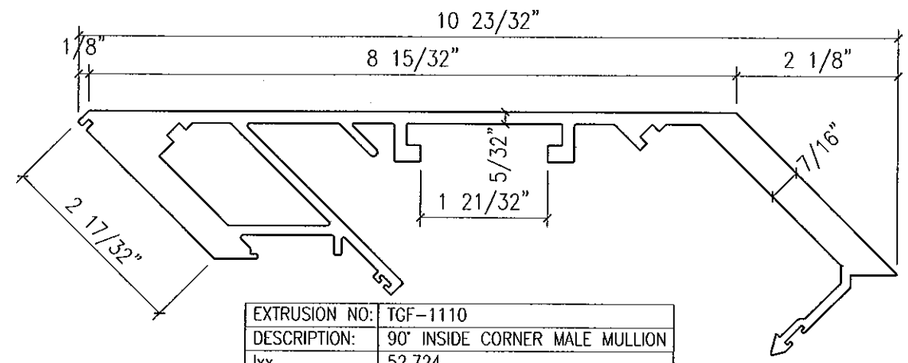

EXTRUSION NO:	TGF-1110
DESCRIPTION:	90° INSIDE CORNER MALE MULLION
Ixx	52.724
Sxx	9.210
ALLOY	6063-T6

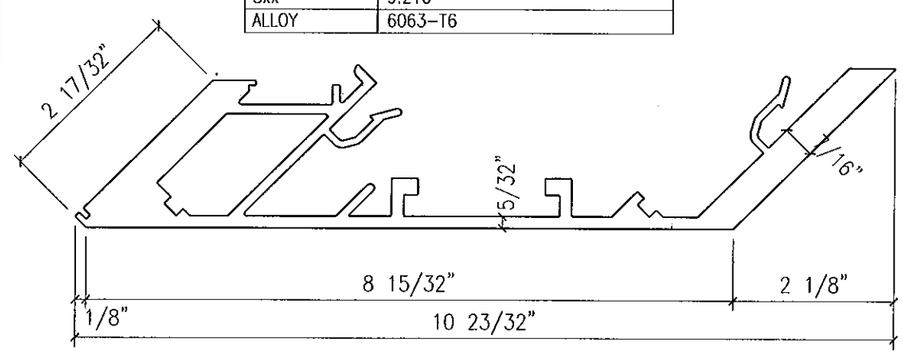

EXTRUSION NO:	TGF-1111
DESCRIPTION:	90° INSIDE CORNER FEMALE MULLION
Ixx	51.199
Sxx	8.850
ALLOY	6063-T6

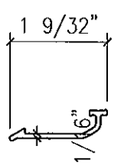

EXTRUSION NO:	TGF-1114
DESCRIPTION:	ANTI BUCKLING CLIP
Ixx	0.001
Sxx	0.005
ALLOY	6063-T6

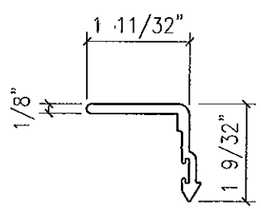

EXTRUSION NO:	TGF-1115
DESCRIPTION:	90° I.S. CORNER ANTI BUCKLING CLIP
Ixx	0.049
Sxx	0.053
ALLOY	6063-T6

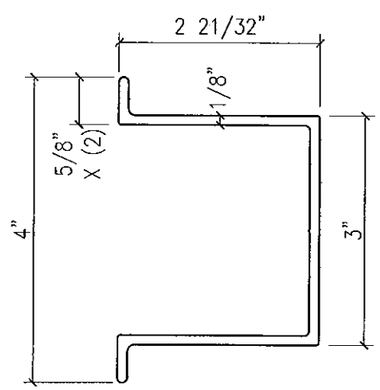

EXTRUSION NO:	TGF-1116
DESCRIPTION:	JAMB CONNECTION CLIP
Ixx	1.964
Sxx	0.982
ALLOY	6063-T6

FOR MIAMI-DADE CO. B.C.C.O.

Approved as complying with the Florida Building Code
Date 10/20/2011
NOA# 11-0401.06
Miami Dade Product Control
By

JEFFREY H MARSH
LICENSE
No 70018
STATE OF
FLORIDA
PROFESSIONAL ENGINEER
10/5/2011

GLASS COMPANY
1101 13TH STREET WEST RIVIERA BEACH, FLORIDA 33404
PH. (561) 863-7076 FAX (561) 863-7088
www.trainorglass.com
TRAINOR
ILLINOIS FLORIDA GEORGIA NEW JERSEY COLORADO TEXAS ARIZONA VIRGINIA MARYLAND

REVISIONS

NO.	DATE	BY
1	.	.
2	.	.
3	.	.
4	.	.
5	.	.
6	.	.

DESIGN ENGINEERING & CONSULTING Inc.
2905 N. COLLINS BLVD. - SUITE 100 RICHARDSON, TEXAS 75080
PH. 972-644-9440 FAX. 972-644-4294

Date	Scale
3-3-11	HALF

Drawing No
4326438

Drawing Title
113 PSF
LARGE MISSILE IMPACT EXTRUSIONS

Sheet No
36 / 44

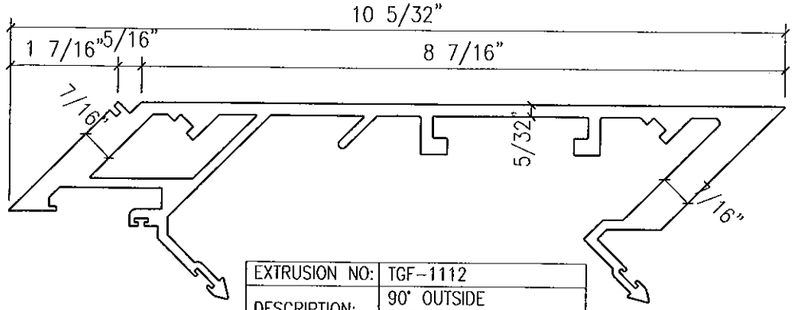

EXTRUSION NO:	TGF-1112
DESCRIPTION:	90° OUTSIDE CORNER MALE MULLION
Ixx	45.575
Sxx	8.772
ALLOY	6063-T6

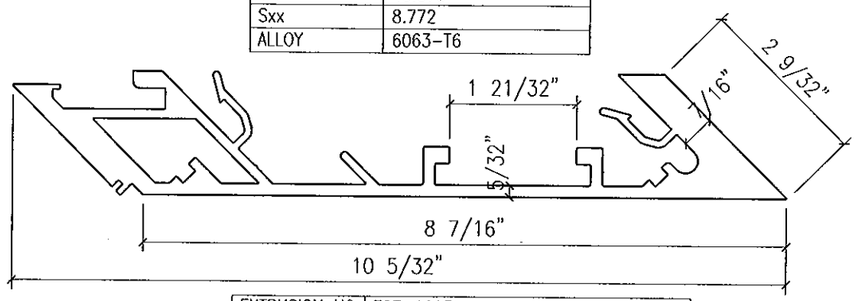

EXTRUSION NO:	TGF-1113
DESCRIPTION:	90° OUTSIDE CORNER FEMALE MULLION
Ixx	46.015
Sxx	8.702
ALLOY	6063-T6

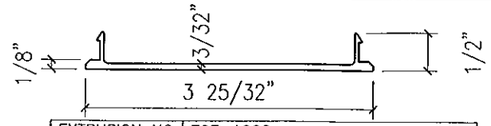

EXTRUSION NO:	TGF-1202
DESCRIPTION:	HEAD HORIZONTAL FILLER
Ixx	0.525
Sxx	0.278
ALLOY	6063-T5

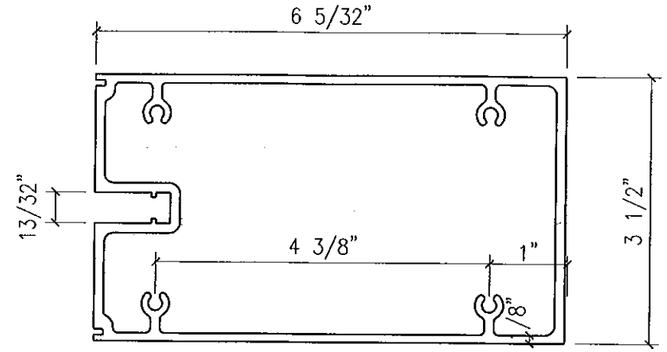

EXTRUSION NO:	TGF-1203
DESCRIPTION:	3 1/2" INT HORIZONTAL
Ixx	15.478
Sxx	4.680
ALLOY	6063-T6

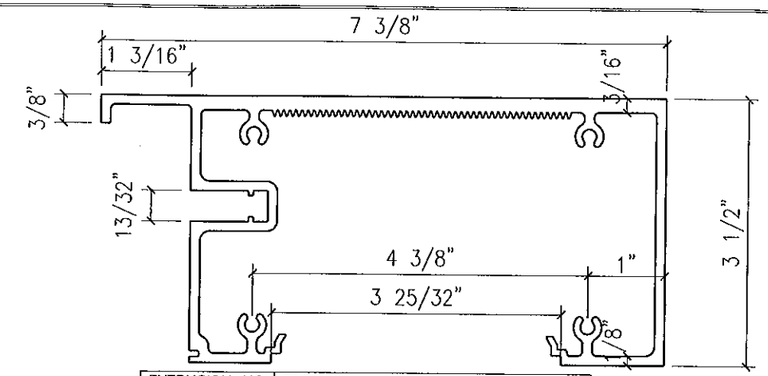

EXTRUSION NO:	TGF-1201
DESCRIPTION:	HEAD HORIZONTAL (1 5/16" INFILLS)
Ixx	19.482
Sxx	4.641
ALLOY	6063-T6

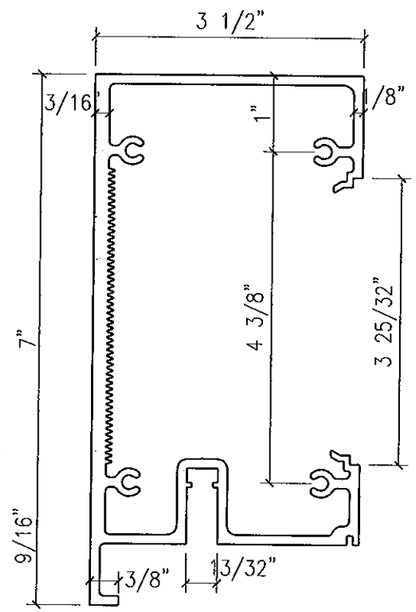

EXTRUSION NO:	TGF-1221
DESCRIPTION:	HEAD HORIZONTAL (9/16" INFILLS)
Ixx	.
Sxx	.
ALLOY	6063-T6

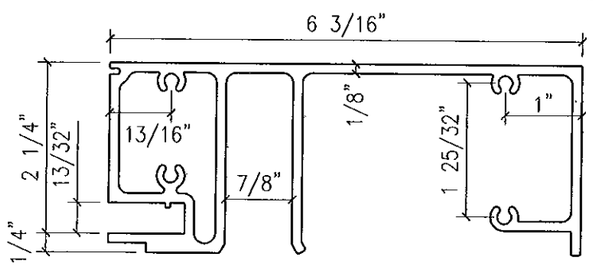

EXTRUSION NO:	TGF-1204
DESCRIPTION:	STACK HORIZONTAL SILL
Ixx	12.536
Sxx	3.596
ALLOY	6063-T6

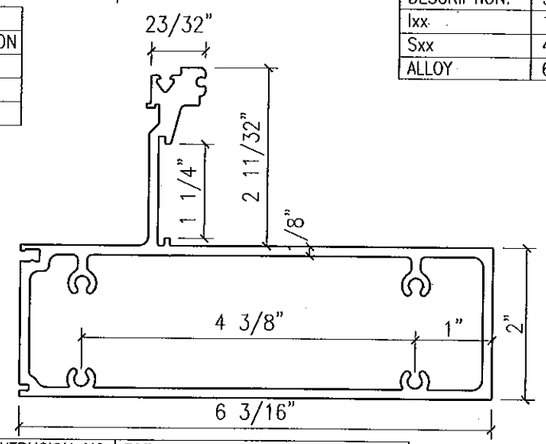

EXTRUSION NO:	TGF-1206
DESCRIPTION:	EXPANSION HORIZONTAL GUTTER
Ixx	11.170
Sxx	3.323
ALLOY	6063-T6

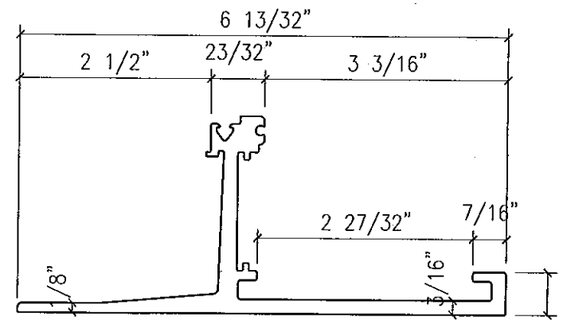

EXTRUSION NO:	TGF-1210
DESCRIPTION:	LIGHT SILL STARTER FOR 9/16" GLASS
Ixx	.
Sxx	.
ALLOY	6063-T6

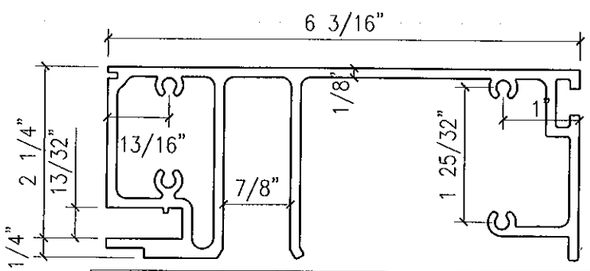

EXTRUSION NO:	TGF-1205
DESCRIPTION:	STACK HORIZ'L SILL w/ STOOL TRIM POCKET
Ixx	12.536
Sxx	3.596
ALLOY	6063-T6

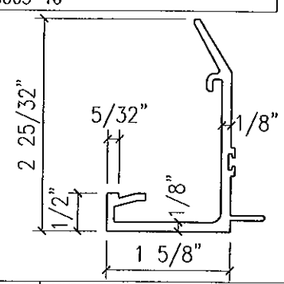

EXTRUSION NO:	TGF-1368
DESCRIPTION:	3 1/2" MALE FACE CAP (9/16" GLAZING)
Ixx	.
Sxx	.
ALLOY	6063-T5

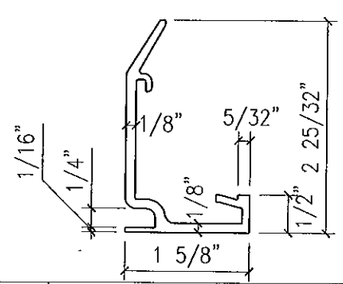

EXTRUSION NO:	TGF-1369
DESCRIPTION:	3 1/2" FEMALE FACE CAP (9/16" GLAZING)
Ixx	.
Sxx	.
ALLOY	6063-T5

FOR MIAMI-DADE CO. B.C.C.O.

Approved as complying with the Florida Building Code
Date 10/20/2011
NOA# 11-0401.06
Miami Dade Product Control
By

JEFFREY H MARSH
LICENSE
No 70018
STATE OF
FLORIDA
PROFESSIONAL ENGINEER
10/5/2011

GLASS COMPANY
1101 13TH STREET WEST RIVIERA BEACH, FLORIDA 33404
PH. (561) 863-7078 FAX (561) 863-7088
www.trainorglass.com
TRAINOR
ILLINOIS FLORIDA GEORGIA NEW JERSEY COLORADO TEXAS ARIZONA VIRGINIA MARYLAND

NO.	DATE	BY
REVISIONS		

DESIGN ENGINEERING & CONSULTING

Date	Scale
3-3-11	HALF

Drawing No 4326438

Drawing Title 113 PSF LARGE MISSILE IMPACT EXTRUSIONS

Sheet No 37 / 44

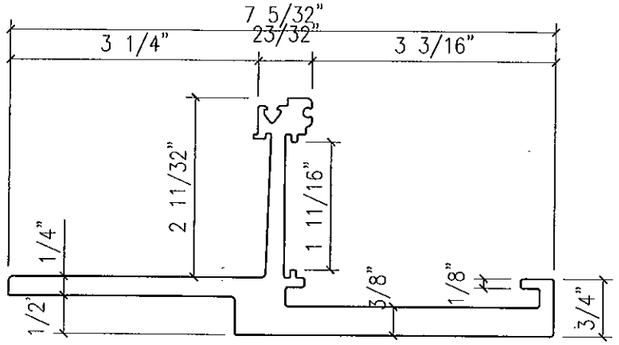

EXTRUSION NO:	TGF-1207
DESCRIPTION:	HEAVY SILL STARTER FOR 1 5/16" GLASS
Ixx	.
Sxx	.
ALLOY	6063-T6

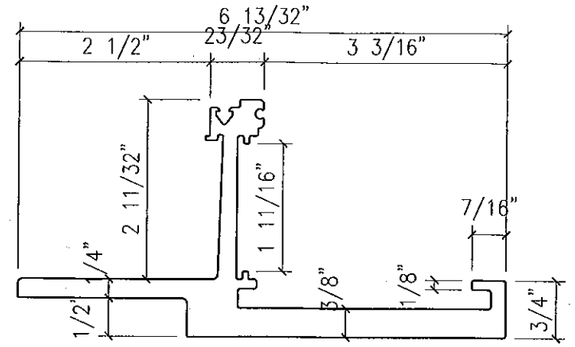

EXTRUSION NO:	TGF-1208
DESCRIPTION:	HEAVY SILL STARTER FOR 9/16" GLASS
Ixx	.
Sxx	.
ALLOY	6063-T6

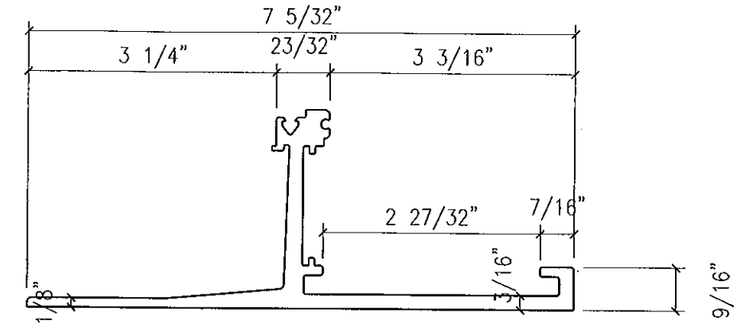

EXTRUSION NO:	TGF-1209
DESCRIPTION:	LIGHT SILL STARTER FOR 1 5/16" GLASS
Ixx	.
Sxx	.
ALLOY	6063-T6

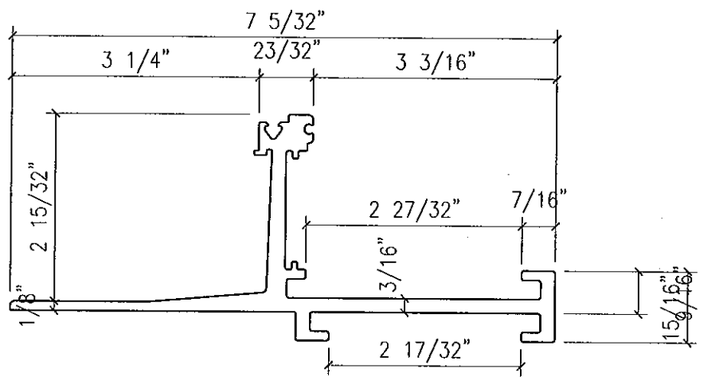

EXTRUSION NO:	TGF-1211
DESCRIPTION:	SILL STARTER FOR 1 5/16" GLASS AT STRAP ANCHOR
Ixx	.
Sxx	.
ALLOY	6063-T6

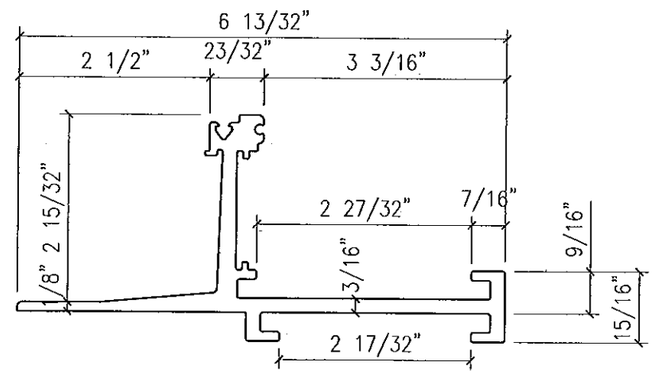

EXTRUSION NO:	TGF-1212
DESCRIPTION:	SILL STARTER FOR 9/16" GLASS AT STRAP ANCHOR
Ixx	.
Sxx	.
ALLOY	6063-T6

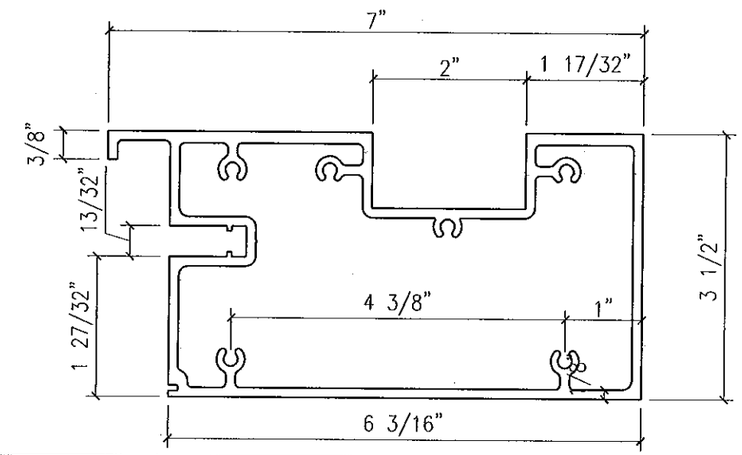

EXTRUSION NO:	TGF-1216
DESCRIPTION:	HEAD HORIZ'L FOR 9/16" GLASS w/ STRAP ANCHOR
Ixx	.
Sxx	.
ALLOY	6063-T6

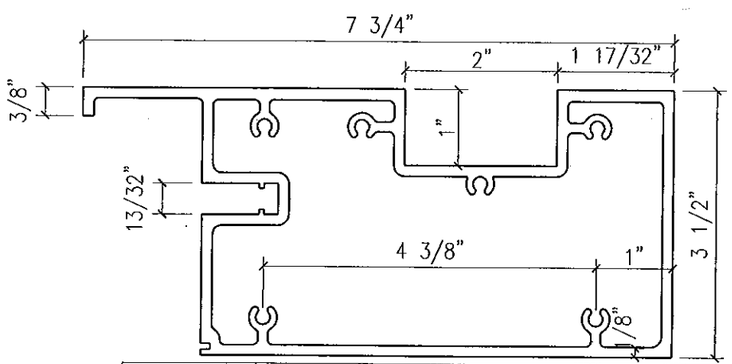

EXTRUSION NO:	TGF-1217
DESCRIPTION:	HEAD HORIZ'L FOR 1 5/16" GLASS w/ STRAP ANCHOR
Ixx	11.170
Sxx	3.323
ALLOY	6063-T6

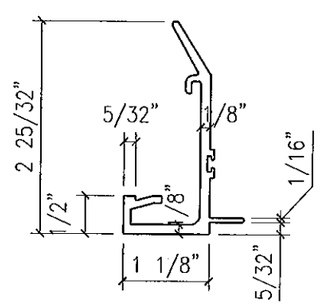

EXTRUSION NO:	TGF-1301
DESCRIPTION:	2 1/2" MALE FACE CAP FOR (9/16" GLAZING)
Ixx	.
Sxx	.
ALLOY	6063-T5

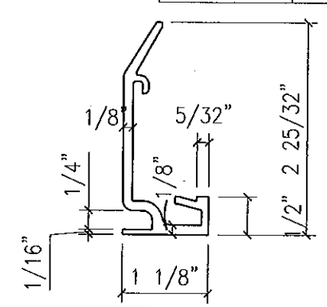

EXTRUSION NO:	TGF-1302
DESCRIPTION:	2 1/2" FEMALE FACE CAP FOR (9/16" GLAZING)
Ixx	.
Sxx	.
ALLOY	6063-T5

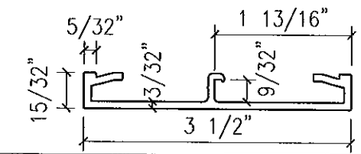

EXTRUSION NO:	TGF-1332
DESCRIPTION:	3 1/2" INT HORIZ FACE CAP
Ixx	.
Sxx	.
ALLOY	6063-T5

FOR MIAMI-DADE CO. B.C.C.O.

Approved as complying with the Florida Building Code
Date 10/20/2011
NOA# 11-0461.06
Miami Dade Product Control
By

JEFFREY H MARSH
LICENSE
No 70018
STATE OF
FLORIDA
PROFESSIONAL ENGINEER
10/5/2011

GLASS COMPANY
1101 13TH STREET WEST RIVIERA BEACH, FLORIDA 33404
PH. (561) 863-7078 FAX (561) 863-7088
www.trainorglass.com
TRAINOR
ILLINOIS FLORIDA GEORGIA NEW JERSEY COLORADO TEXAS ARIZONA VIRGINIA MARYLAND

REVISIONS

NO.	DATE	BY
1		
2		
3		
4		
5		
6		

DESIGN ENGINEERING & CONSULTING Inc.
2200 N. COLLINS BLVD., STE 100 PH: 972-644-2660
RICHARDSON, TEXAS 75080 FAX: 972-644-4284

Date	Scale
3-3-11	HALF

Drawing No
4326438

Drawing Title
113 PSF
LARGE MISSILE IMPACT EXTRUSIONS

Sheet No
38 / 44

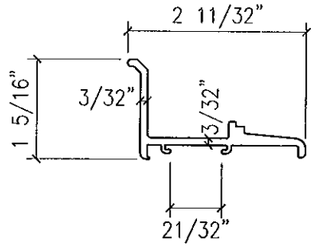

EXTRUSION NO:	TGF-1303
DESCRIPTION:	GLAZING ADAPTER FOR (9/16" CAPTURED HEAD)
Ixx	.
Sxx	.
ALLOY	6063-T5

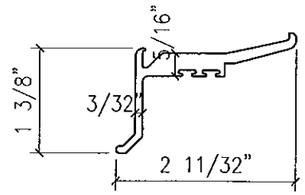

EXTRUSION NO:	TGF-1304
DESCRIPTION:	GLAZING ADAPTER FOR (9/16" CAPTURED STACK HORIZ)
Ixx	.
Sxx	.
ALLOY	6063-T5

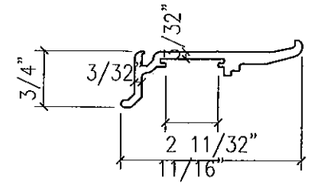

EXTRUSION NO:	TGF-1305
DESCRIPTION:	GLAZING ADAPTER FOR (9/16" CAPTURED INT HORIZ)
Ixx	.
Sxx	.
ALLOY	6063-T5

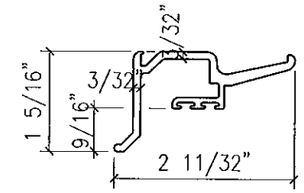

EXTRUSION NO:	TGF-1306
DESCRIPTION:	GLAZING ADAPTER FOR (9/16" CAPTURED RIBBON SILL STARTER)
Ixx	.
Sxx	.
ALLOY	6063-T5

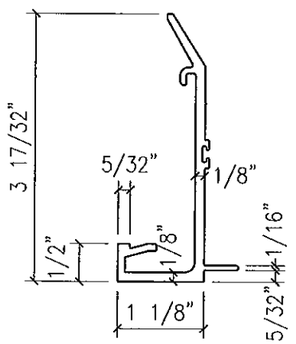

EXTRUSION NO:	TGF-1311
DESCRIPTION:	2 1/2" MALE FACE CAP FOR (1 5/16" GLAZING)
Ixx	.
Sxx	.
ALLOY	6063-T5

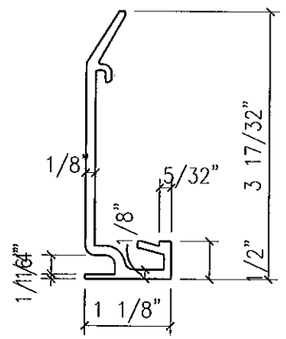

EXTRUSION NO:	TGF-1312
DESCRIPTION:	2 1/2" FEMALE FACE CAP FOR (1 5/16" GLAZING)
Ixx	.
Sxx	.
ALLOY	6063-T5

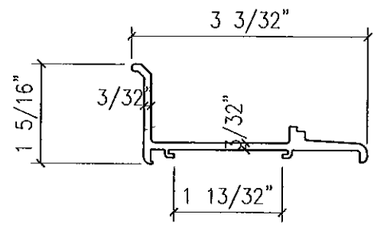

EXTRUSION NO:	TGF-1313
DESCRIPTION:	GLAZING ADAPTER (1 5/16" CAPTURED HEAD)
Ixx	.
Sxx	.
ALLOY	6063-T5

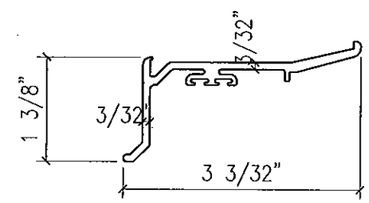

EXTRUSION NO:	TGF-1314
DESCRIPTION:	GLAZING ADAPTER FOR (1 5/16" CAPTURED STACK HORIZ)
Ixx	.
Sxx	.
ALLOY	6063-T5

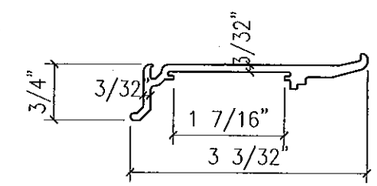

EXTRUSION NO:	TGF-1315
DESCRIPTION:	GLAZING ADAPTER FOR (1 5/16" CAPTURED INT HORIZ)
Ixx	.
Sxx	.
ALLOY	6063-T5

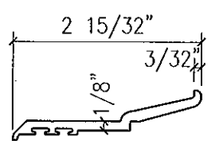

EXTRUSION NO:	TGF-1317
DESCRIPTION:	GLAZING ADAPTER FOR (1 5/16" SSG STACK HORIZ)
Ixx	.
Sxx	.
ALLOY	6063-T5

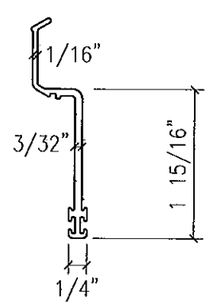

EXTRUSION NO:	TGF-1318
DESCRIPTION:	SSG VERTICAL GLAZING FIN (1 5/16")
Ixx	.
Sxx	.
ALLOY	6063-T5

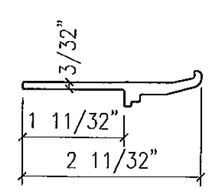

EXTRUSION NO:	TGF-1319
DESCRIPTION:	SSG INT HORIZ'L GLAZING FIN (1 5/16")
Ixx	.
Sxx	.
ALLOY	6063-T5

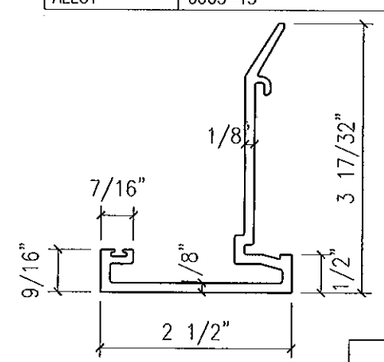

EXTRUSION NO:	TGF-1325
DESCRIPTION:	2 1/2" JAMB FACE CAP (1 5/16" GLAZING)
Ixx	.
Sxx	.
ALLOY	6063-T5

FOR MIAMI-DADE CO. B.C.C.O.

Approved as complying with the Florida Building Code
Date 10/20/2011
NOA# 11-0401.06
Miami Dade Product Control
By

JEFFREY H MARSH
LICENSE
No 70018
STATE OF
FLORIDA
PROFESSIONAL ENGINEER
10/5/2011

GLASS COMPANY
1101 13TH STREET WEST RIVIERA BEACH, FLORIDA 33404
PH. (561) 863-7078 FAX (561) 863-7088
www.trainorglass.com
TRAINOR
ILLINOIS FLORIDA GEORGIA NEW JERSEY COLORADO TEXAS ARIZONA VIRGINIA MARYLAND

REVISIONS

NO.	DATE	BY

DESIGN ENGINEERING & CONSULTING Inc.
2905 N. GARLAND BLVD. - SUITE 100
RICHARDSON, TEXAS 75080
PH: 972-644-5848
FAX: 972-644-5284

Date	Scale
3-3-11	HALF

Drawing No
4326438

Drawing Title
113 PSF
LARGE MISSILE IMPACT
EXTRUSIONS

Sheet No
39 / 44

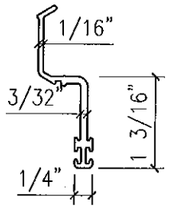

EXTRUSION NO:	TGF-1308
DESCRIPTION:	SSG VERTICAL GLAZING FIN FOR (9/16" GLAZING)
Ixx	.
Sxx	.
ALLOY	6063-T5

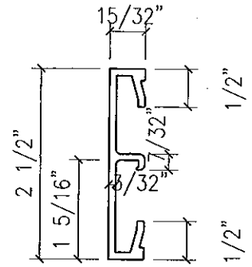

EXTRUSION NO:	TGF-1331
DESCRIPTION:	2 1/2" INT HORIZ. FACE CAP
Ixx	.
Sxx	.
ALLOY	6063-T5

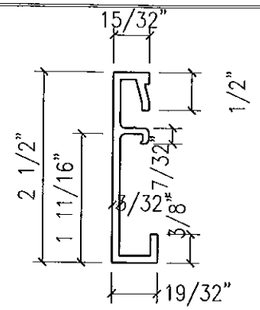

EXTRUSION NO:	TGF-1333
DESCRIPTION:	2 1/2" HEAD FACE CAP
Ixx	.
Sxx	.
ALLOY	6063-T5

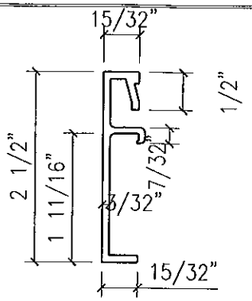

EXTRUSION NO:	TGF-1334
DESCRIPTION:	2 1/2" STACK HORIZ. FACE CAP
Ixx	.
Sxx	.
ALLOY	6063-T5

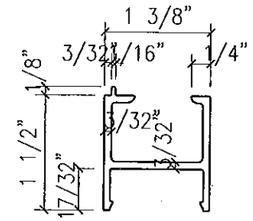

EXTRUSION NO:	TGF-1342
DESCRIPTION:	1 5/16" POCKET FILLER
Ixx	.
Sxx	.
ALLOY	6063-T5

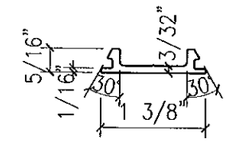

EXTRUSION NO:	TGF-1343
DESCRIPTION:	POCKET FILLER SNAP COVER
Ixx	.
Sxx	.
ALLOY	6063-T5

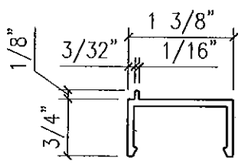

EXTRUSION NO:	TGF-1344
DESCRIPTION:	9/16" POCKET FILLER
Ixx	.
Sxx	.
ALLOY	6063-T5

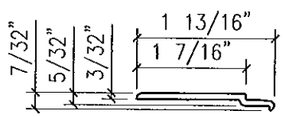

EXTRUSION NO:	TGF-1346
DESCRIPTION:	1 5/16" GLAZING ADAPTER AT STACK GUTTER
Ixx	.
Sxx	.
ALLOY	6063-T5

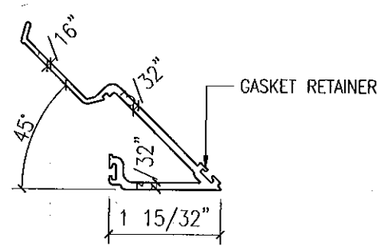

EXTRUSION NO:	TGF-1350
DESCRIPTION:	9/16" GLAZING FIN AT 90° OUTSIDE CORNER
Ixx	.
Sxx	.
ALLOY	6063-T5

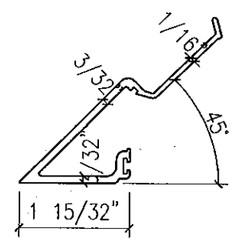

EXTRUSION NO:	TGF-1351
DESCRIPTION:	9/16" GLAZING FIN AT 90° OUTSIDE CORNER
Ixx	.
Sxx	.
ALLOY	6063-T5

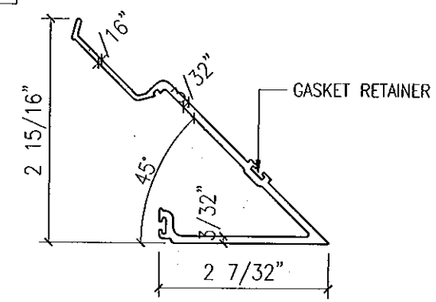

EXTRUSION NO:	TGF-1352
DESCRIPTION:	1 5/16" GLAZING FIN AT 90° OUTSIDE CORNER
Ixx	.
Sxx	.
ALLOY	6063-T5

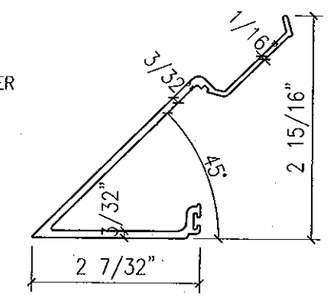

EXTRUSION NO:	TGF-1353
DESCRIPTION:	1 5/16" GLAZING FIN AT 90° OUTSIDE CORNER
Ixx	.
Sxx	.
ALLOY	6063-T5

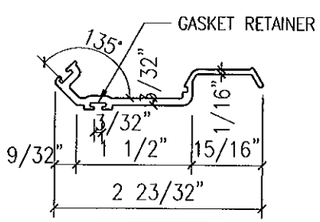

EXTRUSION NO:	TGF-1354
DESCRIPTION:	9/16" GLAZING FIN AT 90° INSIDE CORNER
Ixx	.
Sxx	.
ALLOY	6063-T5

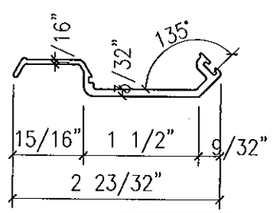

EXTRUSION NO:	TGF-1355
DESCRIPTION:	9/16" GLAZING FIN AT 90° INSIDE CORNER
Ixx	.
Sxx	.
ALLOY	6063-T5

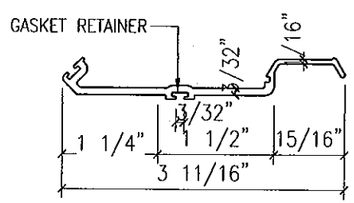

EXTRUSION NO:	TGF-1356
DESCRIPTION:	1 5/16" GLAZING FIN AT 90° INSIDE CORNER
Ixx	.
Sxx	.
ALLOY	6063-T5

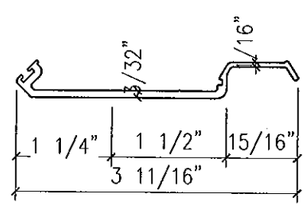

EXTRUSION NO:	TGF-1357
DESCRIPTION:	1 5/16" GLAZING FIN AT 90° INSIDE CORNER
Ixx	.
Sxx	.
ALLOY	6063-T5

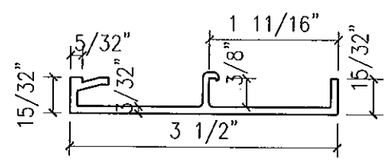

EXTRUSION NO:	TGF-1365
DESCRIPTION:	3 1/2" DL SILL FACE CAP
Ixx	.
Sxx	.
ALLOY	6063-T5

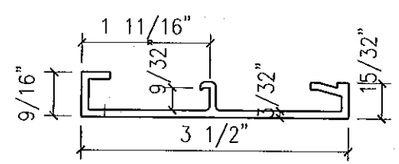

EXTRUSION NO:	TGF-1366
DESCRIPTION:	3 1/2" HEAD FACE CAP
Ixx	.
Sxx	.
ALLOY	6063-T5

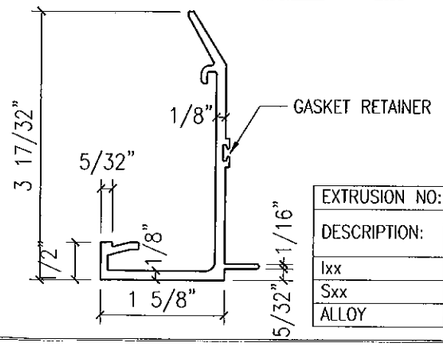

EXTRUSION NO:	TGF-1321
DESCRIPTION:	3 1/2" MALE FACE CAP FOR (1 5/16" GLAZING)
Ixx	.
Sxx	.
ALLOY	6063-T5

EXTRUSION NO:	TGF-1322
DESCRIPTION:	3 1/2" FEMALE FACE CAP FOR (1 5/16" GLAZING)
Ixx	.
Sxx	.
ALLOY	6063-T5

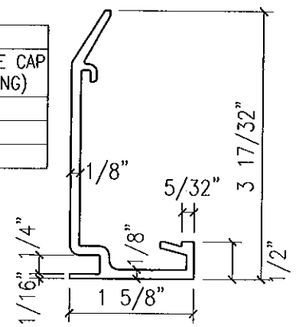

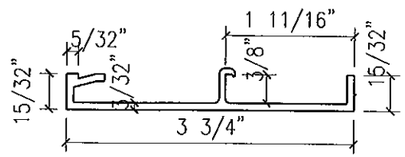

EXTRUSION NO:	TGF-1367
DESCRIPTION:	3 3/4" WL SILL FACE CAP
Ixx	.
Sxx	.
ALLOY	6063-T5

FOR MIAMI-DADE CO. B.C.C.O.

Approved as complying with the Florida Building Code
Date 10/20/2011
NOA# 11-0401.06
Miami Dade Product Control
By

JEFFREY H MARSH
LICENSE
No 70018
STATE OF
FLORIDA
PROFESSIONAL ENGINEER
10/5/2011

TRAINOR GLASS COMPANY
1101 13TH STREET WEST RIVIERA BEACH, FLORIDA 33404
PH. (561) 863-7078 FAX (561) 863-7088
www.trainorglass.com
ILLINOIS FLORIDA GEORGIA NEW JERSEY COLORADO TEXAS ARIZONA VIRGINIA MARYLAND

REVISIONS

NO.	DATE	BY
.	.	.
.	.	.
.	.	.
.	.	.
.	.	.
.	.	.

DESIGN ENGINEERING & CONSULTING Inc.
2905 N. COLLINS BLVD. - SUITE 190 RICHARDSON, TEXAS 75080
PH: 972-644-5545 FAX: 972-644-4224

Date 3-3-11	Scale HALF
Drawing No 4326438	
Drawing Title 113 PSF LARGE MISSILE IMPACT EXTRUSIONS	
Sheet No 40 / 44	

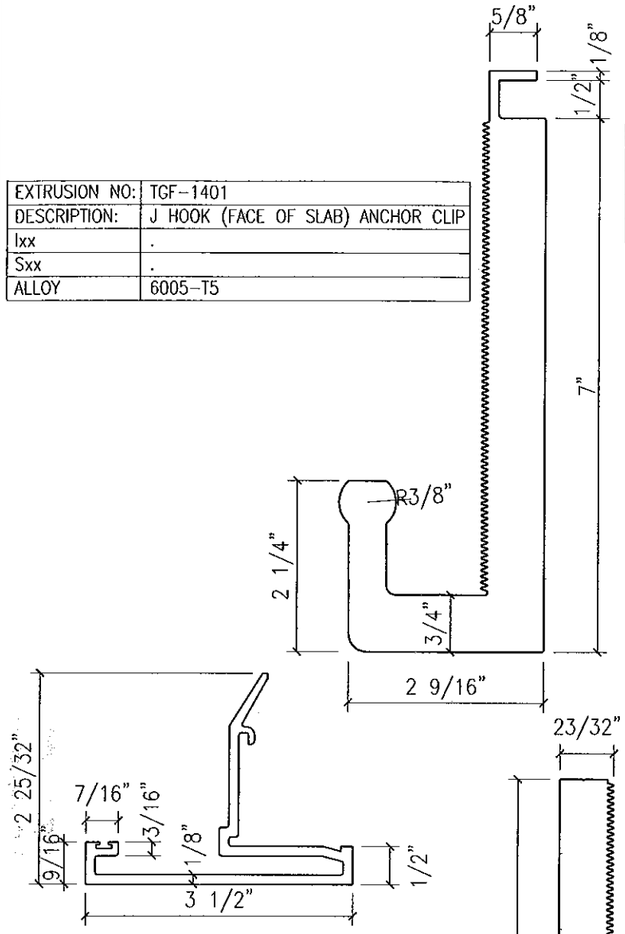

EXTRUSION NO:	TGF-1401
DESCRIPTION:	J HOOK (FACE OF SLAB) ANCHOR CLIP
Ixx	.
Sxx	.
ALLOY	6005-T5

EXTRUSION NO:	TGF-1363
DESCRIPTION:	3 1/2" JAMB FACE CAP FOR (9/16" GLAZING)
Ixx	.
Sxx	.
ALLOY	6063-T5

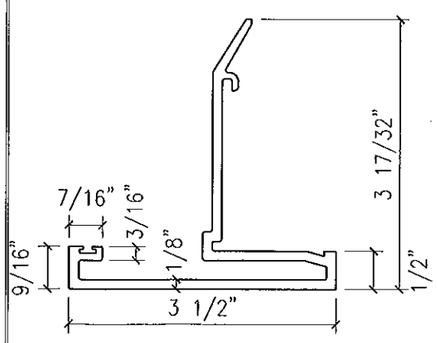

EXTRUSION NO:	TGF-1364
DESCRIPTION:	3 1/2" JAMB FACE CAP FOR (1 5/16" GLAZING)
Ixx	.
Sxx	.
ALLOY	6063-T5

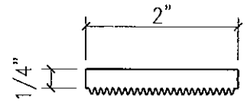

EXTRUSION NO:	TGF-1402
DESCRIPTION:	SERRATED WASHER
Ixx	.
Sxx	.
ALLOY	6005-T5

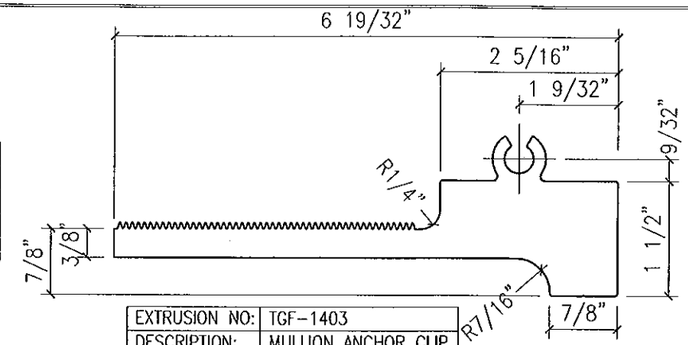

EXTRUSION NO:	TGF-1403
DESCRIPTION:	MULLION ANCHOR CLIP
Ixx	.
Sxx	.
ALLOY	6005-T5

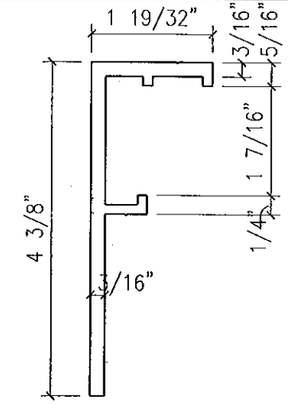

EXTRUSION NO:	TGF-1404
DESCRIPTION:	ANTI-WALK / ANTI-LIFT
Ixx	.
Sxx	.
ALLOY	6005-T5

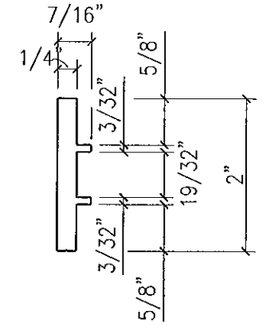

EXTRUSION NO:	TGF-1405
DESCRIPTION:	MULLION ANCHOR BAR / LIFTING LUG
Ixx	.
Sxx	.
ALLOY	6005-T5

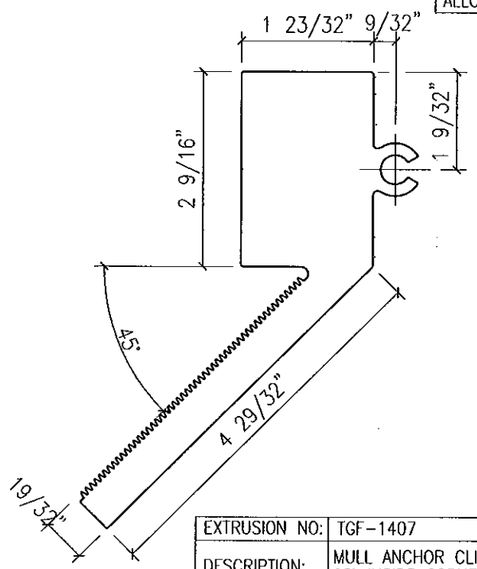

EXTRUSION NO:	TGF-1407
DESCRIPTION:	MULL ANCHOR CLIP AT 90° INSIDE CORNER
Ixx	.
Sxx	.
ALLOY	6005-T5

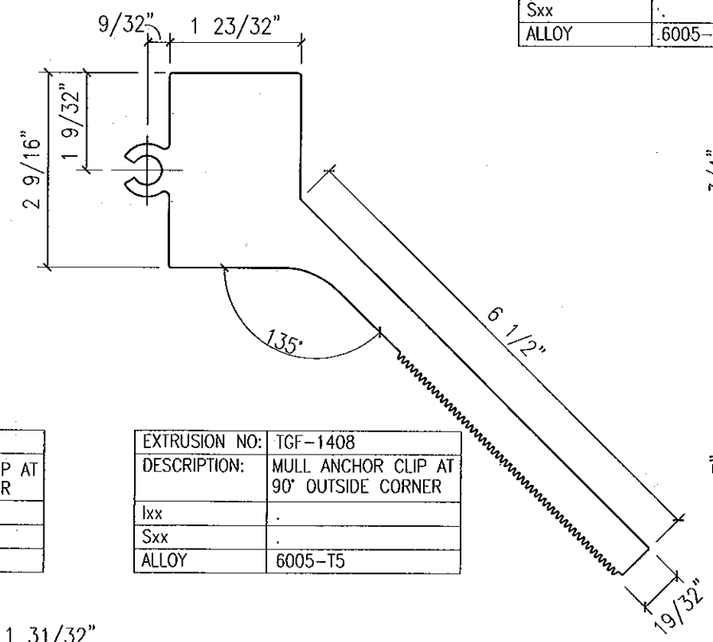

EXTRUSION NO:	TGF-1408
DESCRIPTION:	MULL ANCHOR CLIP AT 90° OUTSIDE CORNER
Ixx	.
Sxx	.
ALLOY	6005-T5

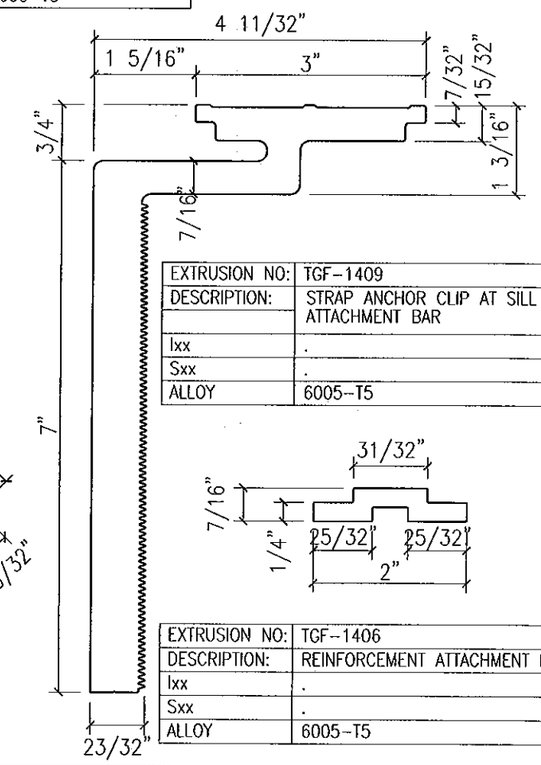

EXTRUSION NO:	TGF-1409
DESCRIPTION:	STRAP ANCHOR CLIP AT SILL ATTACHMENT BAR
Ixx	.
Sxx	.
ALLOY	6005-T5

EXTRUSION NO:	TGF-1406
DESCRIPTION:	REINFORCEMENT ATTACHMENT BAR
Ixx	.
Sxx	.
ALLOY	6005-T5

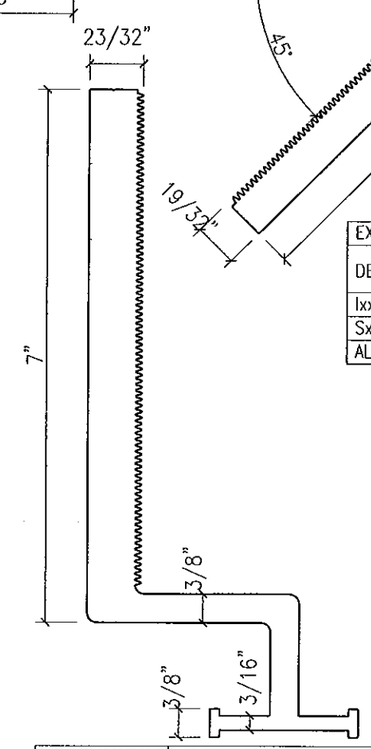

EXTRUSION NO:	TGF-1410
DESCRIPTION:	STRAP ANCHOR CLIP AT HEAD ATTACHMENT BAR
Ixx	.
Sxx	.
ALLOY	6005-T5

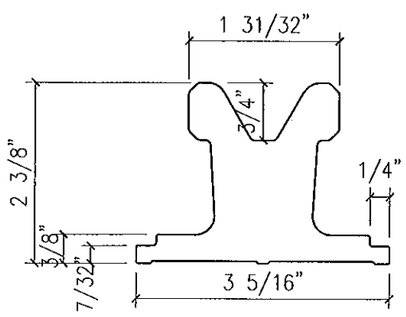

EXTRUSION NO:	TGF-1411
DESCRIPTION:	SILL ANCHOR MULLION LUG
Ixx	.
Sxx	.
ALLOY	6005-T5

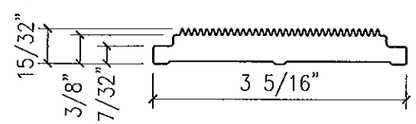

EXTRUSION NO:	TGF-1412
DESCRIPTION:	SILL STARTER REINFORCING AT ANCHOR PLATE
Ixx	.
Sxx	.
ALLOY	6005-T5

FOR MIAMI-DADE CO. B.C.C.O.

Approved as complying with the Florida Building Code
Date 10/20/2011
NOA# 11-0401.06
Miami-Dade Product Control
By

JEFFREY H MARSH
LICENSE
No 70018
STATE OF
FLORIDA
PROFESSIONAL ENGINEER
10/5/2011

GLASS COMPANY
1101 13TH STREET WEST RIVIERA BEACH, FLORIDA 33404
PH. (561) 863-7078 FAX (561) 863-7088
www.trainorglass.com
TRAINOR
ILLINOIS FLORIDA GEORGIA NEW JERSEY COLORADO TEXAS ARIZONA VIRGINIA MARYLAND

REVISIONS

NO.	DATE	BY

DESIGN ENGINEERING & CONSULTING Inc.
2905 S. COLLINS BLVD. - SUITE 100 RICHARDSON, TEXAS 75080
PH: 972-644-6640 FAX: 972-644-4036

Date	Scale
3-3-11	HALF

Drawing No 4326438

Drawing Title
113 PSF
LARGE MISSILE IMPACT EXTRUSIONS

Sheet No 41 / 44

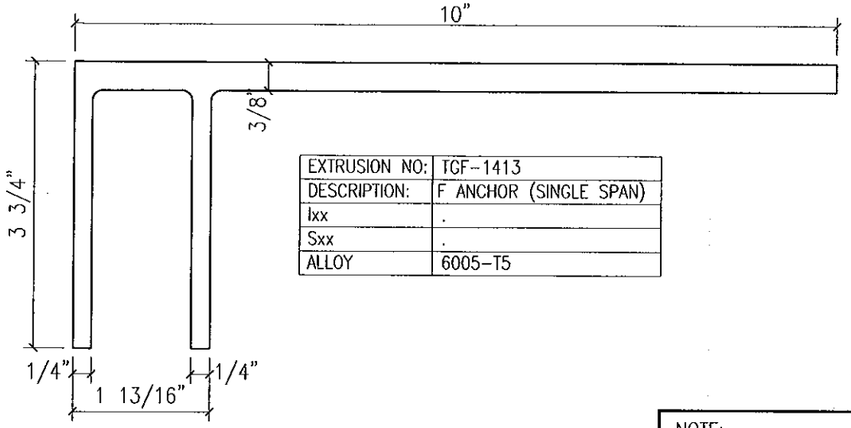

EXTRUSION NO:	TGF-1413
DESCRIPTION:	F ANCHOR (SINGLE SPAN)
Ixx	.
Sxx	.
ALLOY	6005-T5

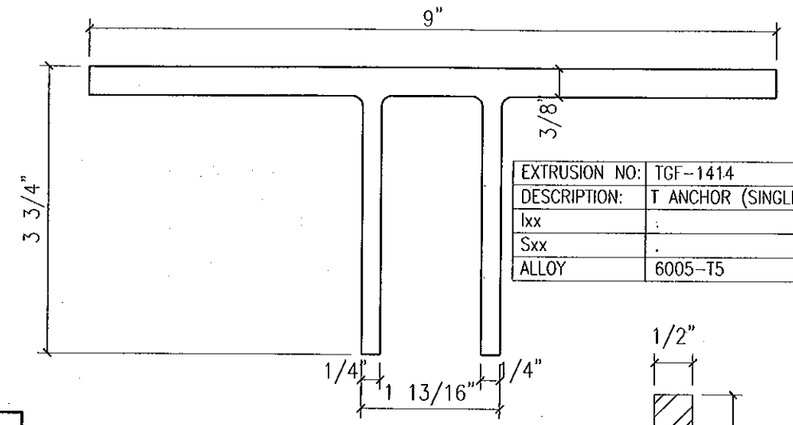

EXTRUSION NO:	TGF-1414
DESCRIPTION:	T ANCHOR (SINGLE SPAN)
Ixx	.
Sxx	.
ALLOY	6005-T5

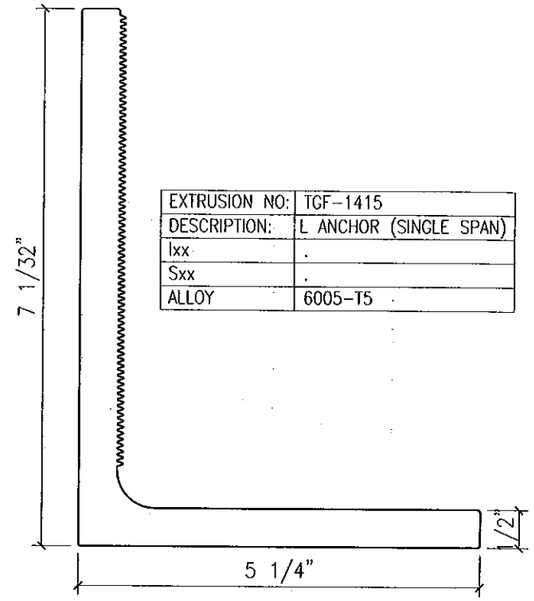

EXTRUSION NO:	TGF-1415
DESCRIPTION:	L ANCHOR (SINGLE SPAN)
Ixx	.
Sxx	.
ALLOY	6005-T5

NOTE:
STEEL IN CONTACT WITH ALUMINUM MUST BE COATED w/ RED OXIDE PRIMER

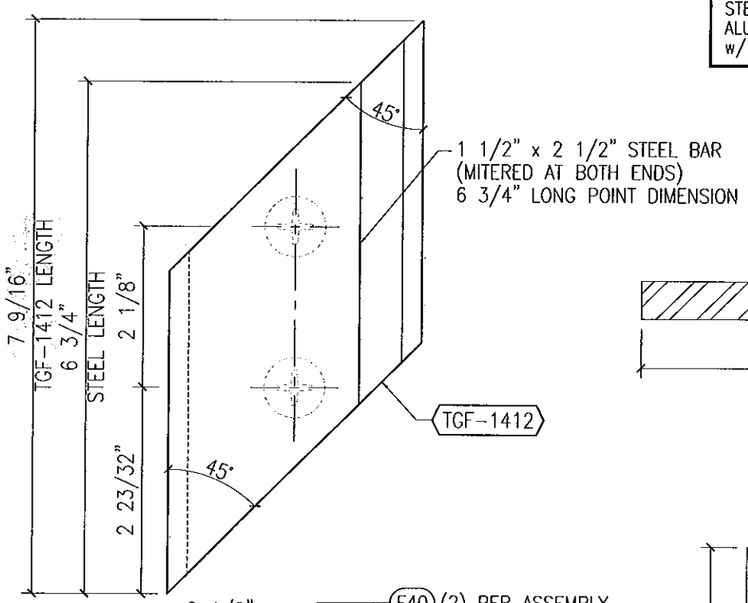

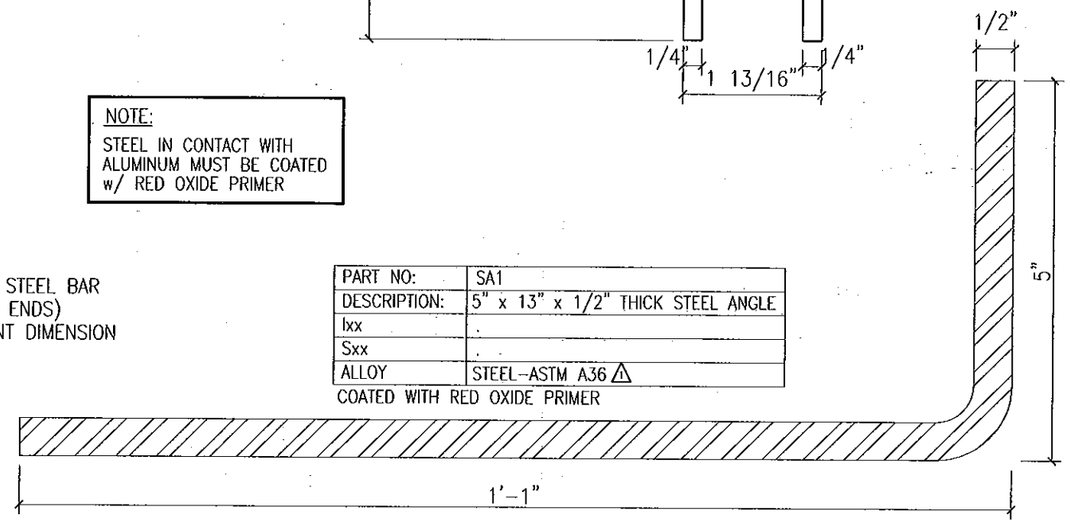

PART NO:	SA1
DESCRIPTION:	5" x 13" x 1/2" THICK STEEL ANGLE
Ixx	.
Sxx	.
ALLOY	STEEL-ASTM A36 △1

COATED WITH RED OXIDE PRIMER

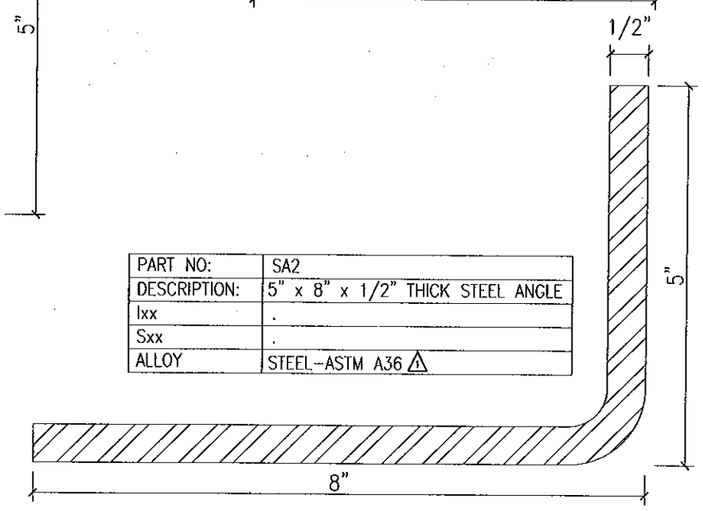

PART NO:	SA2
DESCRIPTION:	5" x 8" x 1/2" THICK STEEL ANGLE
Ixx	.
Sxx	.
ALLOY	STEEL-ASTM A36 △1

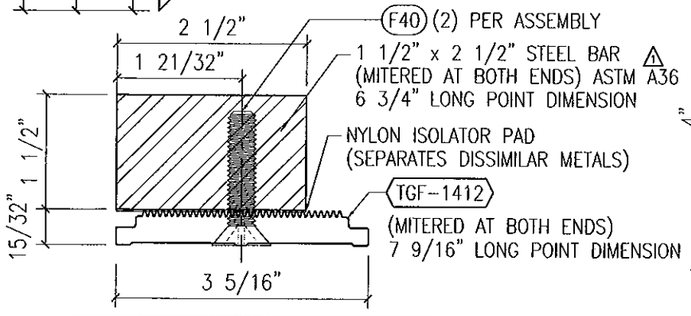

CORNER ANCHOR CLIP ASSEMBLY (HEAD/SILL)	
EXTRUSION NO:	TGF-1412 DOUBLE-MITERED
DESCRIPTION:	SILL STARTER REINFORCING ANCHOR PLATE FASTENED TO 1 1/2" x 2 1/2" STEEL BAR w/ (2) 3/8" x 1 1/2" FH MACHINE SCREWS
Ixx	.
Sxx	.
ALLOY	6005-T5 (TGF-1412 ONLY)

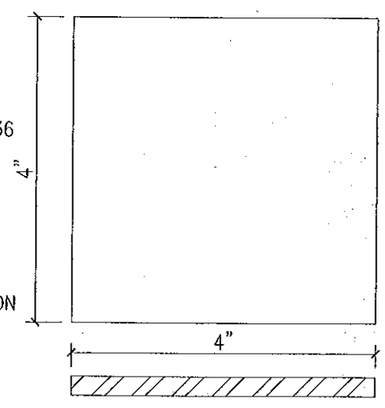

PART NO:	SP1
DESCRIPTION:	4" x 4" x 1/4" STEEL PLATE
Ixx	.
Sxx	.
ALLOY	STEEL-ASTM A36 △1

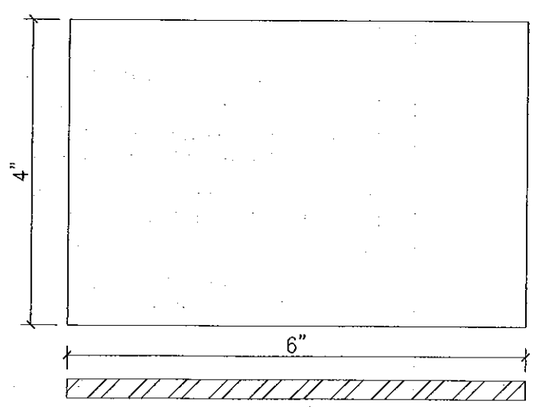

PART NO:	SP2
DESCRIPTION:	4" x 6" x 1/4" STEEL PLATE
Ixx	.
Sxx	.
ALLOY	STEEL-ASTM A36 △1

FOR MIAMI-DADE CO. B.C.C.O.

Approved as complying with the Florida Building Code
Date 10/20/2011
NOA# 11-0401.06
Miami-Dade Product Control
By

JEFFREY H MARSH
LICENSE
No 70018
STATE OF FLORIDA
PROFESSIONAL ENGINEER
10/5/2011

GLASS COMPANY
1101 13TH STREET WEST RIVIERA BEACH, FLORIDA 33404
PH. (561) 863-7078 FAX (561) 863-7086
www.trainorglass.com
TRAINOR
ILLINOIS FLORIDA GEORGIA NEW JERSEY COLORADO TEXAS ARIZONA VIRGINIA MARYLAND

REVISIONS

NO.	DATE	BY	REV.
1	4/26/11	BR	REMOVED STEEL CHALICE
2			
3			
4			
5			
6			

DESIGN ENGINEERING & CONSULTING Inc.
2205 S. COLLINS BLVD., SUITE 130 ARLINGTON, TEXAS 76006
PH. 972-344-2040 FAX. 972-344-2041

Date 3-3-11	Scale HALF
Drawing No 4326438	
Drawing Title 113 PSF LARGE MISSILE IMPACT EXTRUSIONS	
Sheet No 42 / 44	

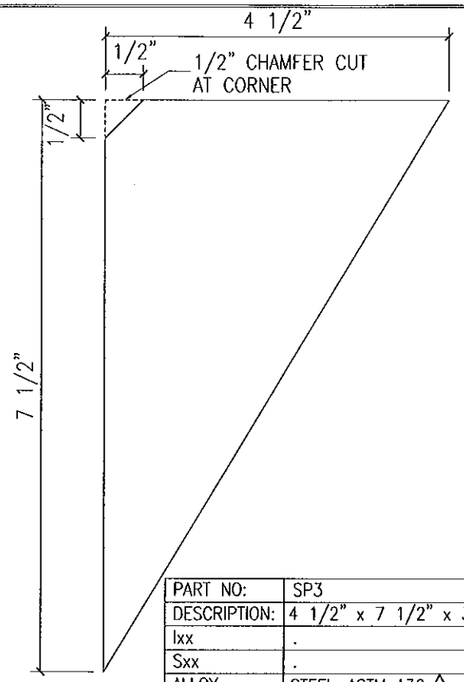

PART NO:	SP3
DESCRIPTION:	4 1/2" x 7 1/2" x 3/8" GUSSET PLATE
Ixx	.
Sxx	.
ALLOY	STEEL–ASTM A36 ⚠1

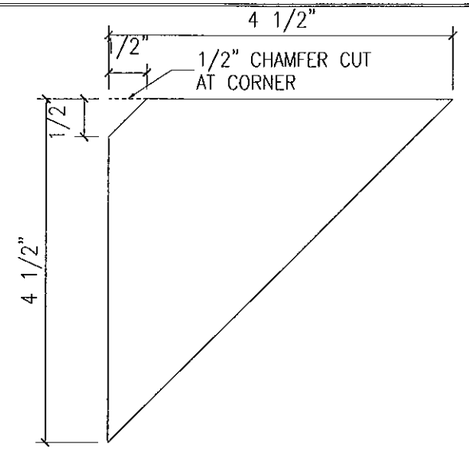

PART NO:	SP4
DESCRIPTION:	4 1/2" x 4 1/2" x 3/8" GUSSET PLATE
Ixx	.
Sxx	.
ALLOY	STEEL–ASTM A36 ⚠1

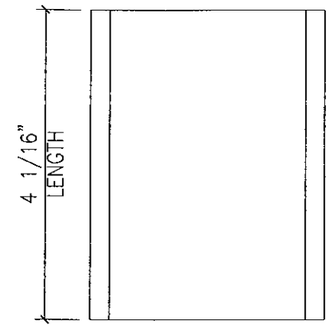

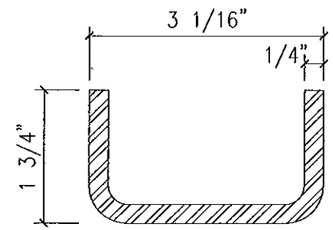

PART NO:	SC1
DESCRIPTION:	1 3/4" x 3 1/16" x 1 3/4" STEEL CHANNEL
Ixx	.
Sxx	.
ALLOY	STEEL–ASTM A36 ⚠1

COATED WITH RED OXIDE PRIMER

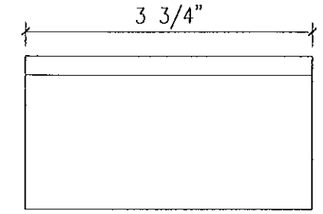

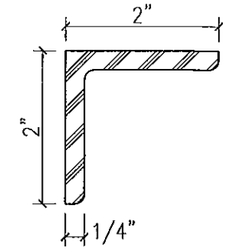

EXTRUSION NO:	AA1
DESCRIPTION:	2" x 2" x 1/4" THICK ALUM ANGLE
Ixx	.
Sxx	.
ALLOY	6061–T6

NOTE:
STEEL IN CONTACT WITH ALUMINUM MUST BE COATED w/ RED OXIDE PRIMER

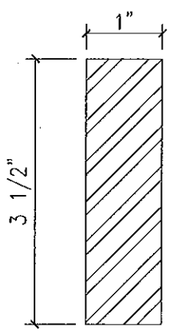

PART NO:	SB–1
DESCRIPTION:	3 1/2" x 1" STEEL REINF. BAR
Ixx	.
Sxx	.
ALLOY	STEEL–ASTM A36 ⚠1

COATED WITH RED OXIDE PRIMER

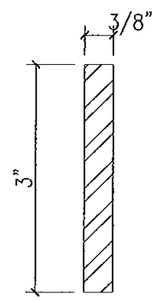

PART NO:	SB–2
DESCRIPTION:	3" x 3/8" STEEL REINF. BAR
Ixx	.
Sxx	.
ALLOY	STEEL–ASTM A36 ⚠1

COATED WITH RED OXIDE PRIMER

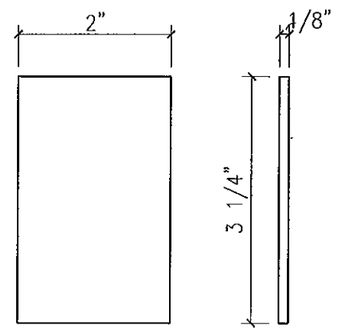

EXTRUSION NO:	AP1
DESCRIPTION:	1/8" x 3 1/4" END DAM PLATE
Ixx	.
Sxx	.
ALLOY	3003–H14

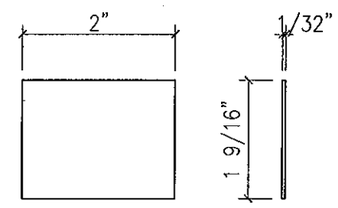

EXTRUSION NO:	AP2
DESCRIPTION:	.040" x 1 9/16" ALUM WATER DIVERTER (2" LONG) AT 1 5/16" GLASS
Ixx	.
Sxx	.
ALLOY	3003–H14

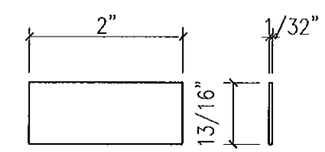

EXTRUSION NO:	AP3
DESCRIPTION:	.040" x 13/16" ALUMINUM WATER DIVERTER (2" LONG) AT 9/16" GLASS
Ixx	.
Sxx	.
ALLOY	3003–H14

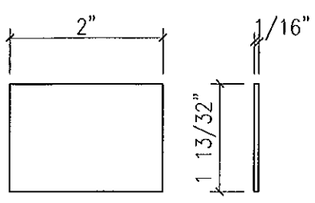

EXTRUSION NO:	AP4
DESCRIPTION:	1/16" x 1 13/32" ALUMINUM PLATE (2" LONG) AT HORIZ'L STACK JOINT
Ixx	.
Sxx	.
ALLOY	3003–H14

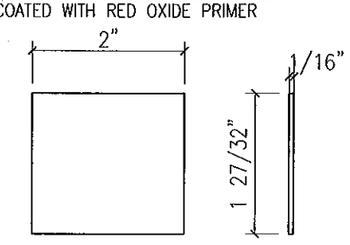

EXTRUSION NO:	AP5
DESCRIPTION:	1/16" x 1 27/32" ALUMINUM PLATE (2" LONG) AT STARTER SILL SPLICE
Ixx	.
Sxx	.
ALLOY	3003–H14

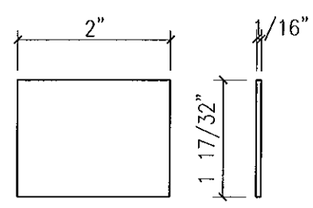

EXTRUSION NO:	AP6
DESCRIPTION:	1/16" x 1 17/32" ALUMINUM PLATE (2" LONG) AT STARTER SILL SPLICE
Ixx	.
Sxx	.
ALLOY	3003–H14

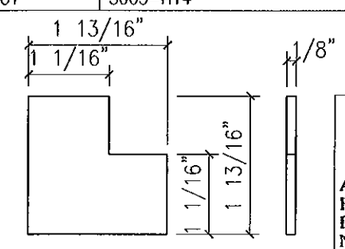

EXTRUSION NO:	AP7
DESCRIPTION:	1/8" THICK ALUM CORNER PLATE
Ixx	.
Sxx	.
ALLOY	3003–H14

FOR MIAMI-DADE CO. B.C.C.O.

Approved as complying with the Florida Building Code
Date 10/20/2011
NOA# 11-0401.06
Miami-Dade Product Control
By

JEFFREY H MARSH
LICENSE
No 70018
STATE OF
FLORIDA
PROFESSIONAL ENGINEER
10/5/2011

GLASS COMPANY
1101 13TH STREET WEST RIVIERA BEACH, FLORIDA 33404
PH. (561) 863-7078 FAX (561) 863-7088
www.trainorglass.com
TRAINOR
ILLINOIS FLORIDA GEORGIA NEW JERSEY COLORADO TEXAS ARIZONA VIRGINIA MARYLAND

NO.	DATE	BY	REVISIONS
1	9/29/11	BBS	REMOVED STEEL CALLOUT
2			
3			
4			
5			

DESIGN ENGINEERING & CONSULTING Inc.
2005 S. COLLINS BLVD., SUITE 100
RICHARDSON, TEXAS 75080
PH: 972-644-5840
FAX: 972-644-5294

Date	Scale
3-3-11	HALF

Drawing No
4326438

Drawing Title
1.3 PSF
LARGE MISSILE IMPACT EXTRUSIONS

Sheet No
43 / 44

1 1/16" SILICONE BOND WIDTH CHART												
WINDLOAD 113 PSF	(SMALLEST LEG OF LARGEST LITE OF GLASS) – INCHES											
	24	30	36	42	48	52	54	56.5	60	66	72	76
	OK	OK	OK	OK	OK	OK	OK	FAIL	FAIL	FAIL	FAIL	FAIL
A: 1 7/32" SILICONE BOND WIDTH IS ACCEPTABLE FOR ALL GLAZING SIZES WITHIN CHART.												
B: REFER TO NOTE (1) ON PAGE 7 OF 44 △1												

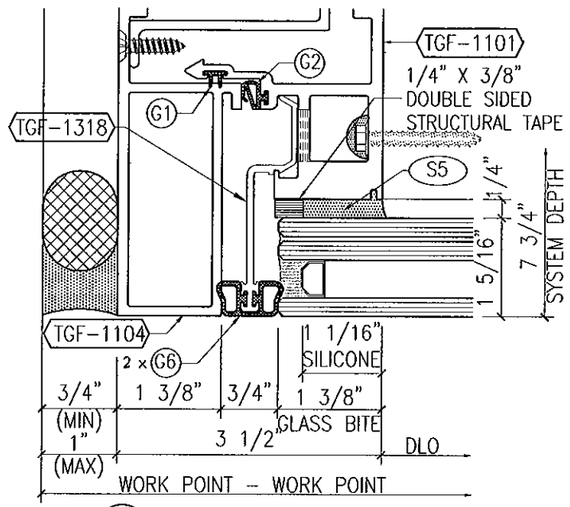

1 REGLAZED SSG JAMB MULLION
w/ 1 5/16" GLASS

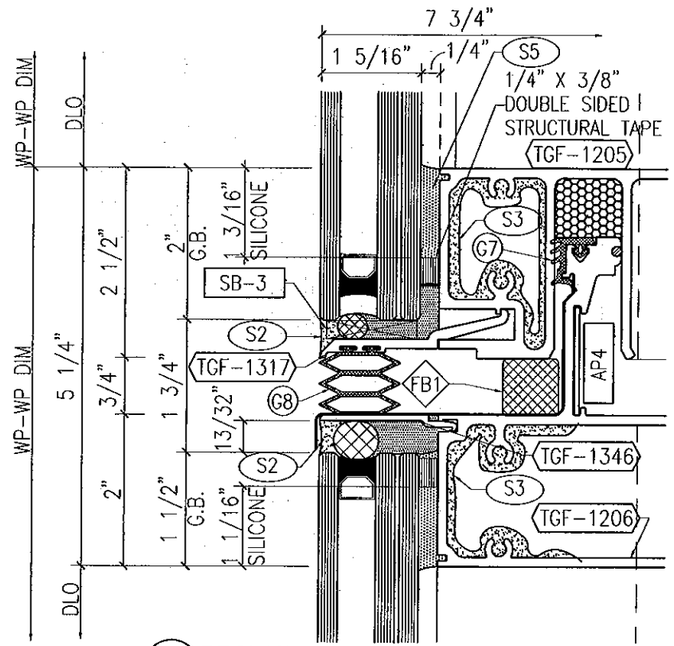

1 REGLAZED SSG STACK HORIZONTAL
w/ 1 5/16" GLAZING

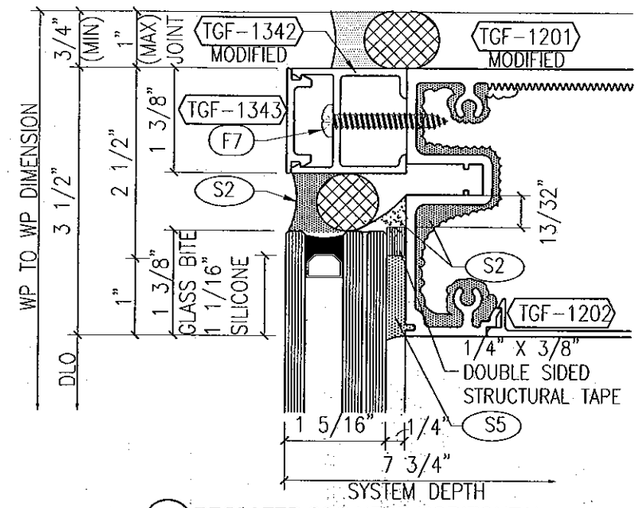

1 REGLAZED SSG HEAD HORIZONTAL
w/ 1 5/16" THICK GLASS

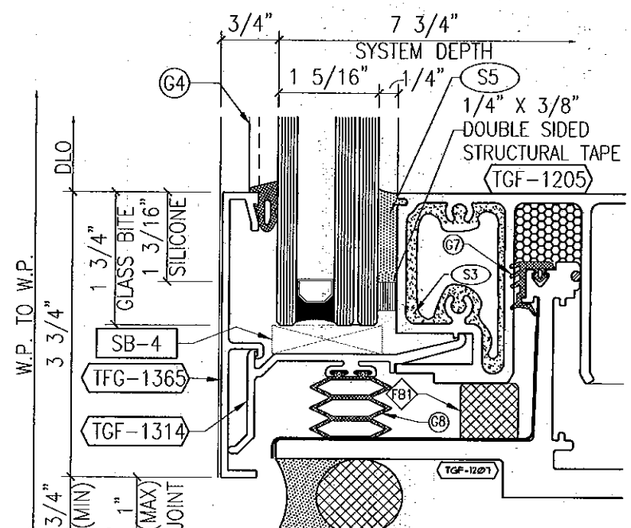

1 REGLAZED SILL HORIZONTAL
w/ 1 5/16" THICK GLASS & 3 3/4" FACE CAP

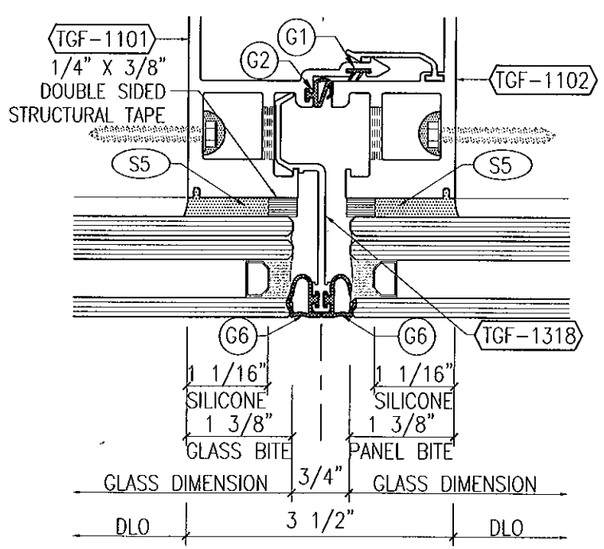

1 REGLAZED SSG INT MULLION
w/ 1 5/16" THICK GLASS OR COMPOSITE PANEL

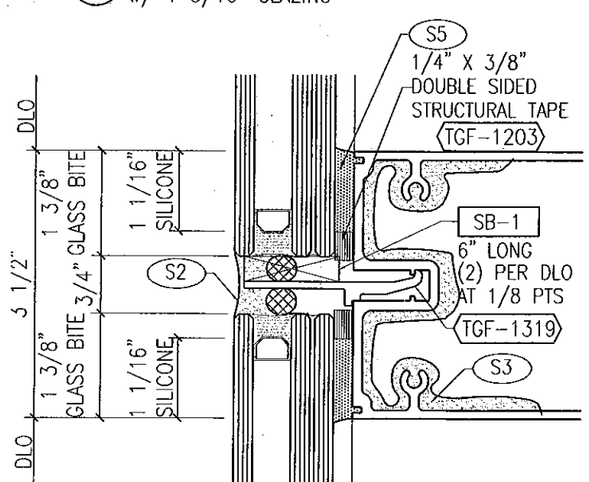

1 REGLAZED SSG INT HORIZONTAL
w/ 1 5/16" THICK GLASS

FOR MIAMI-DADE CO. B.C.C.O.

Approved as complying with the Florida Building Code
Date 10/20/2011
NOA# 11-0401.06
Miami Dade Product Control
By

JEFFREY H MARSH
LICENSE
No 70018
STATE OF
FLORIDA
PROFESSIONAL ENGINEER
10/5/2011

GLASS COMPANY
1101 13TH STREET WEST RIVIERA BEACH, FLORIDA 33404
PH. (561) 863-7078 FAX (561) 863-7088
www.trainorglass.com
TRAINOR
ILLINOIS FLORIDA GEORGIA NEW JERSEY COLORADO TEXAS ARIZONA VIRGINIA MARYLAND

REVISIONS

NO.	DATE	BY	REVISION NOTE
△1	10/20/11	DD	
△2			
△3			
△4			
△5			

DESIGN ENGINEERING & CONSULTING Inc
2205 S. COLLINS BLVD. – SUITE 100
ARLINGTON, TEXAS 76006
PH. 972-641-8600
FAX. 972-641-4284

Date	Scale
3-3-11	HALF

Drawing No
4326438

Drawing Title
113 PSF
LARGE MISSILE IMPACT
REGLAZE DETAILS

Sheet No
44 /44