MIAMI-DADE COUNTY

BUILDING AND NEIGHBORHOOD COMPLIANCE DEPARTMENT (BNC)
BOARD AND CODE ADMINISTRATION DIVISION

MIAMI-DADE COUNTY
PRODUCT CONTROL SECTION
11805 SW 26 Street, Room 208
Miami, Florida 33175-2474
T (786) 315-2590 F (786) 315-2599
www.miamidade.gov/building/

NOTICE OF ACCEPTANCE (NOA)

DaVinci Roofscapes, LLC
1413 Osage Ave.
Kansas City, KS 66105

SCOPE:

This NOA is being issued under the applicable rules and regulations governing the use of construction materials. The documentation submitted has been reviewed and accepted by Miami-Dade County BNC - Product Control Section to be used in Miami Dade County and other areas where allowed by the Authority Having Jurisdiction (AHJ).

This NOA shall not be valid after the expiration date stated below. The Miami-Dade County Product Control Section (In Miami Dade County) and/or the AHJ (in areas other than Miami Dade County) reserve the right to have this product or material tested for quality assurance purposes. If this product or material fails to perform in the accepted manner, the manufacturer will incur the expense of such testing and the AHJ may immediately revoke, modify, or suspend the use of such product or material within their jurisdiction. BNC reserves the right to revoke this acceptance, if it is determined by Miami-Dade County Product Control Section that this product or material fails to meet the requirements of the applicable building code.
This product is approved as described herein, and has been designed to comply with the Florida Building Code including the High Velocity Hurricane Zone of the Florida Building Code.

DESCRIPTION: Bellaforté Slate

LABELING: Each unit shall bear a permanent label with the manufacturer's name or logo, city, state and following statement: "Miami-Dade County Product Control Approved", unless otherwise noted herein.

RENEWAL of this NOA shall be considered after a renewal application has been filed and there has been no change in the applicable building code negatively affecting the performance of this product.

TERMINATION of this NOA will occur after the expiration date or if there has been a revision or change in the materials, use, and/or manufacture of the product or process. Misuse of this NOA as an endorsement of any product, for sales, advertising or any other purposes shall automatically terminate this NOA. Failure to comply with any section of this NOA shall be cause for termination and removal of NOA.

ADVERTISEMENT: The NOA number preceded by the words Miami-Dade County, Florida, and followed by the expiration date may be displayed in advertising literature. If any portion of the NOA is displayed, then it shall be done in its entirety.

INSPECTION: A copy of this entire NOA shall be provided to the user by the manufacturer or its distributors and shall be available for inspection at the job site at the request of the Building Official.

This revises NOA# 09-0929.09 and consists of pages 1 through 8.
The submitted documentation was reviewed by Alex Tigera.

MIAMI-DADE COUNTY APPROVED

ROOFING ASSEMBLY APPROVAL

Category:	Roofing
Sub-Category:	Slate
Materials	Composite
Deck Type:	Wood
Maximum Design Pressure	**–121.0 psf**
Fire Classificationn Pressure	See General Limitation #1

TRADE NAMES OF PRODUCTS MANUFACTURED OR LABELED BY APPLICANT:

Product	Dimensions	Test Specifications	Product Description
Bellaforté Synthetic Slate	15-1/2" long 11-1/2" width	TAS 110	Synthetic Self-Aligning Slate
Starter Slate	12-1/4" x 3-1/2"	TAS 110	Starter Slate for use with Synthetic Self-Aligning Slate

MANUFACTURING LOCATION:

1. Kansas City, KS

EVIDENCE SUBMITTED:

Test Agency	Test Identifier	Test Name/Report	Date
PRI Asphalt Technologies	DRM-017-02-01	TAS 100	08/27/09
	3087829	ASTM D 2843	01/25/06
	3061879(d)	ASTM D1929	01/25/06
	3061879(b)	ASTM D635	09/21/05
Intertek ETL Semko	3169679COQ-033	TAS 125	08/28/09

APPROVED SYSTEMS:

Deck Type:	Wood, Non-insulated
Deck Description:	$^{19}/_{32}$" or greater plywood or wood plank.
Slope Range:	2:12 or greater
Maximum Uplift Pressure:	The maximum allowable uplift pressure shall be **–121 psf.**
Deck Attachment:	In accordance with applicable Building Code, but in no case shall the sheathing be installed by first adhering the plywood to the trusses with construction adhesive, then fastened with #8 x 1-3/4" wood screws spaced 4" around the board perimeter and 6" o.c. in the board field. In reroofing, where the deck is less than $^{19}/_{32}$" thick (Minimum $^{15}/_{32}$") The above attachment method must be in addition to existing attachment.
Underlayment:	Underlayment shall be applied in accordance with applicable Building Code. One layer of ASTM D 226 Type II felt overlapped 19" and 6" end lap. Underlayment shall be installed with minimum 12 ga. corrosion resistant ring shank nails and tin caps, spaced 12" o.c. staggered in the field and 6" o.c. at the laps. Or, any approved underlayment having a current NOA. Install an 18" wide layer of W.R. Grace Ice and Water Shield along the rake edges of the deck as per the current W.R. Grace Ice and Water Shield Notice of Acceptance.
Valleys:	Valley metal shall be a minimum 16" wide. Valley metal shall be set over a minimum 36" wide sweat sheet of minimum ASTM D 226 type II embedded in roofing cement, or an approved self-adhered membrane. Valley metal shall imbedded in roofing cement and be secure with roofing nails spaced a maximum 4" o.c. at outer most part of metal on each side. Valley edges shall be primed and embed a 6" wide asphalt coated fabric in a 8" wide bed of roofing cement. Place a second coat of roofing cement over the fabric. Valley detail shall be in accordance with the current published manufacturer's literature.
Ridge & Hips:	See Da Vinci's Roofscape's published installation manual for detail.
Starter:	Install required starter over the edge a 3/4". Fasten each starter with a minimum of two corrosion resistant 12 gauge ring shank roofing nails located 2-1/2" up from butt edge and ¾" in from each end. Nails shall be of sufficient length to penetrate sheathing $^{3}/_{16}$".

Application: Bellaforté Synthetic Slate shall be installed in accordance with DaVinci Roofscapes, LLC's current published installation manual. Bellaforté Synthetic Slate shall have a maximum 12" exposure **(see Detail 'B').**

The first course of the Slate should begin on the tab first then on top of the tile in the left hand corner. It may be necessary to lift the edge of the left hand tile to insert the valley of the installed tile underneath. Bellaforté Synthetic Slate shall be fastened with three (3) square pancake head #10 x 2" corrosion resistant screws. Two(2) through the holes locations imprinted on the slate **(see Detail 'A')** and one(1) through the side tab.

GENERAL LIMITATIONS:

1. Fire classification is not part of this acceptance; refer to a current Approved Roofing Materials Directory for fire ratings of this product.

2. The maximum designed pressure limitation listed shall be applicable to all roof pressure zones (i.e. field, perimeters, and corners). Neither rational analysis, nor extrapolation shall be permitted for enhanced fastening at enhanced pressure zones (i.e. perimeters, extended corners and corners).

3. All panels shall be permanently labeled with the manufacturer's name and/or logo, and the following statement: "Miami-Dade County Product Control Approved" **or** with the Miami-Dade County Product Control Seal as seen below.

4. All products listed herein shall have a quality assurance audit in accordance with the Florida Building Code and Rule 9B-72 of the Florida Administrative Code.

DRAWINGS
DETAIL A
BELLAFORTÉ SYNTHETIC SLATE

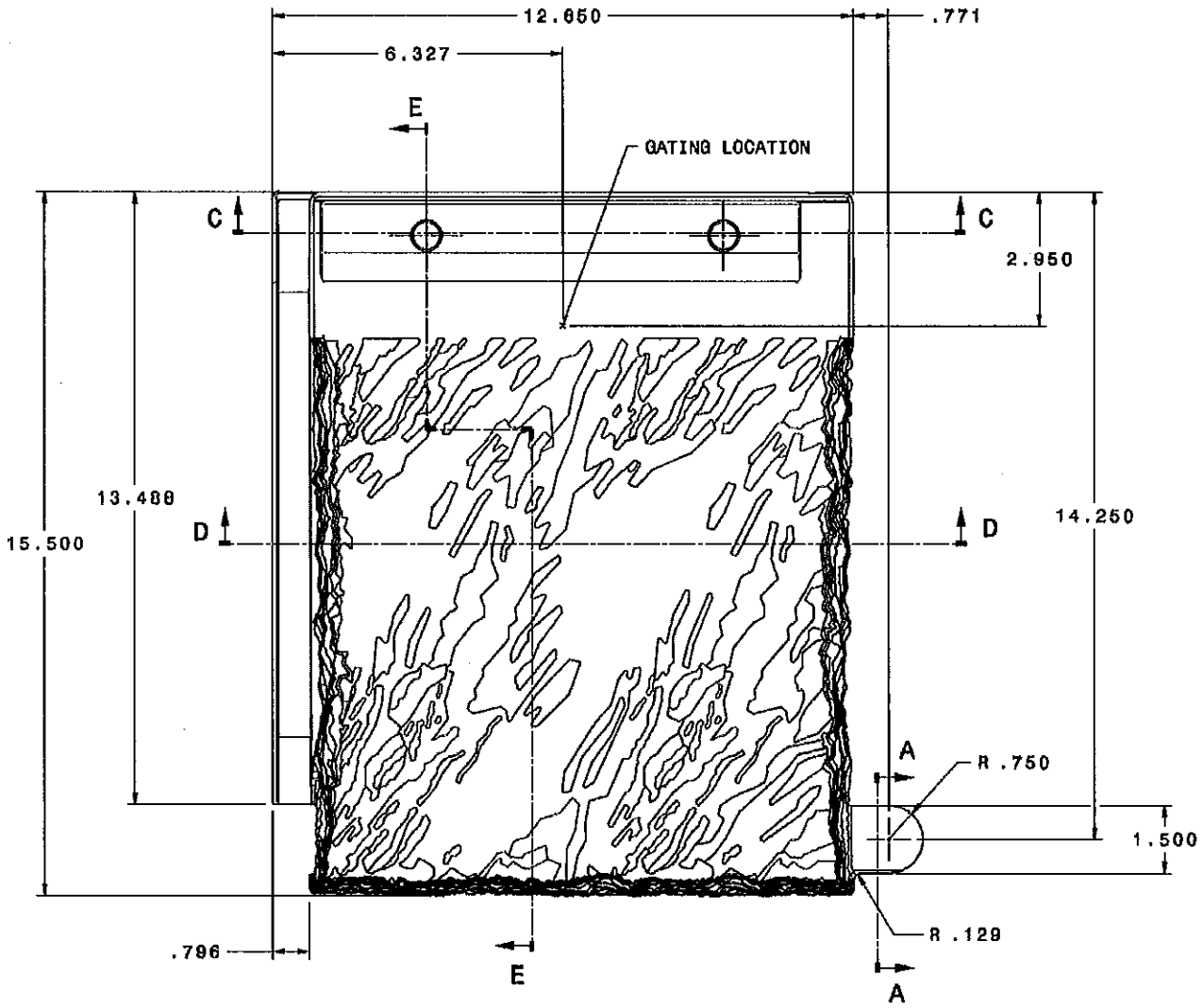

Front view

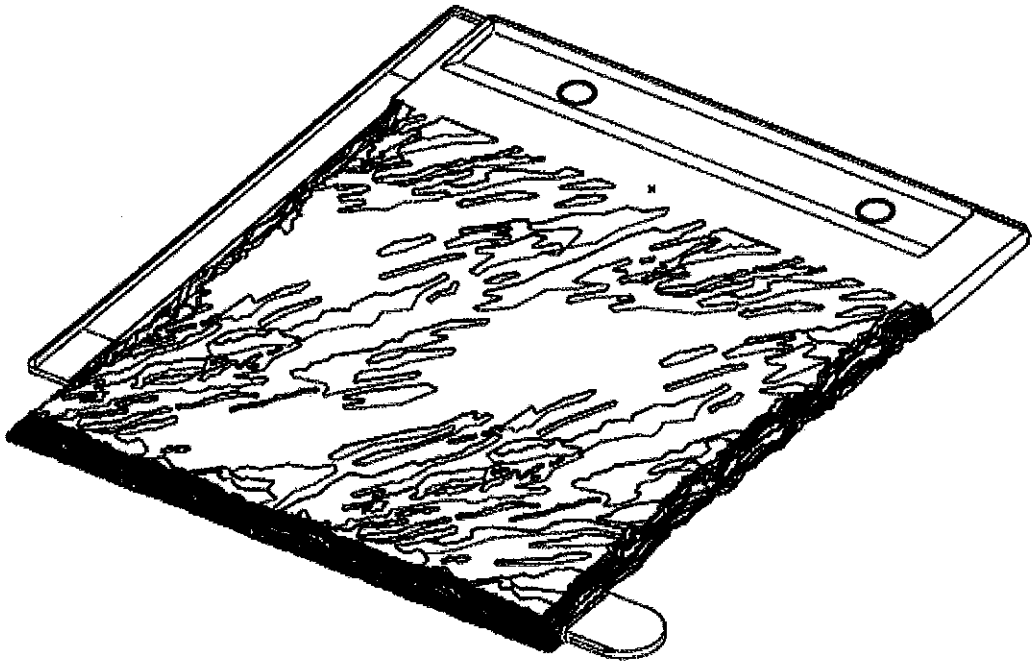

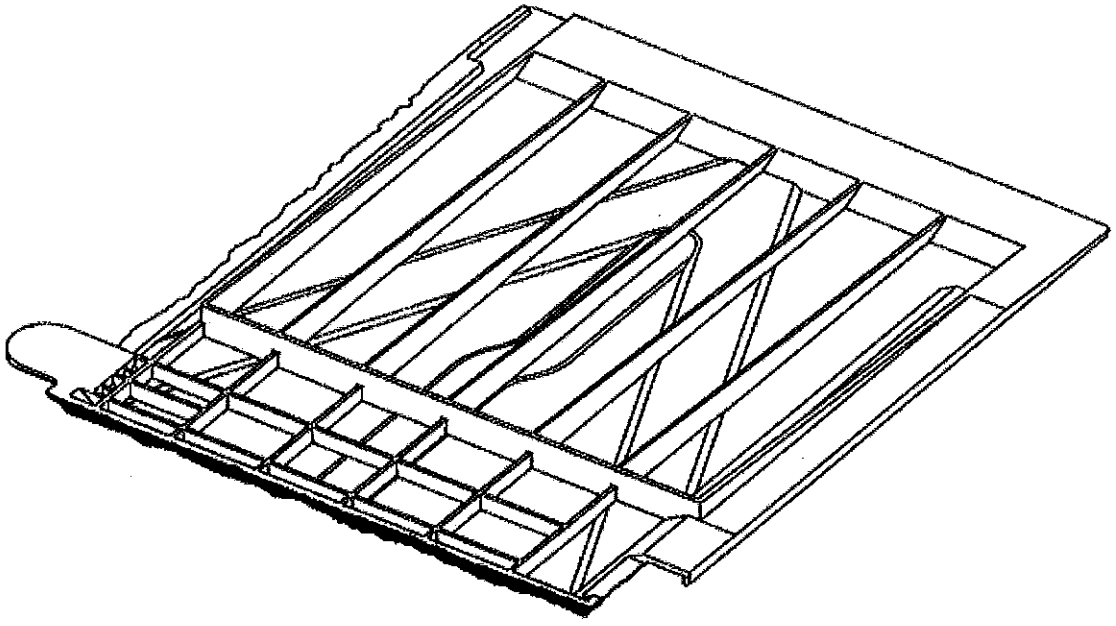

DETAIL 'B'
DAVINCI BELLAFORTÉ SLATE
LAYOUT

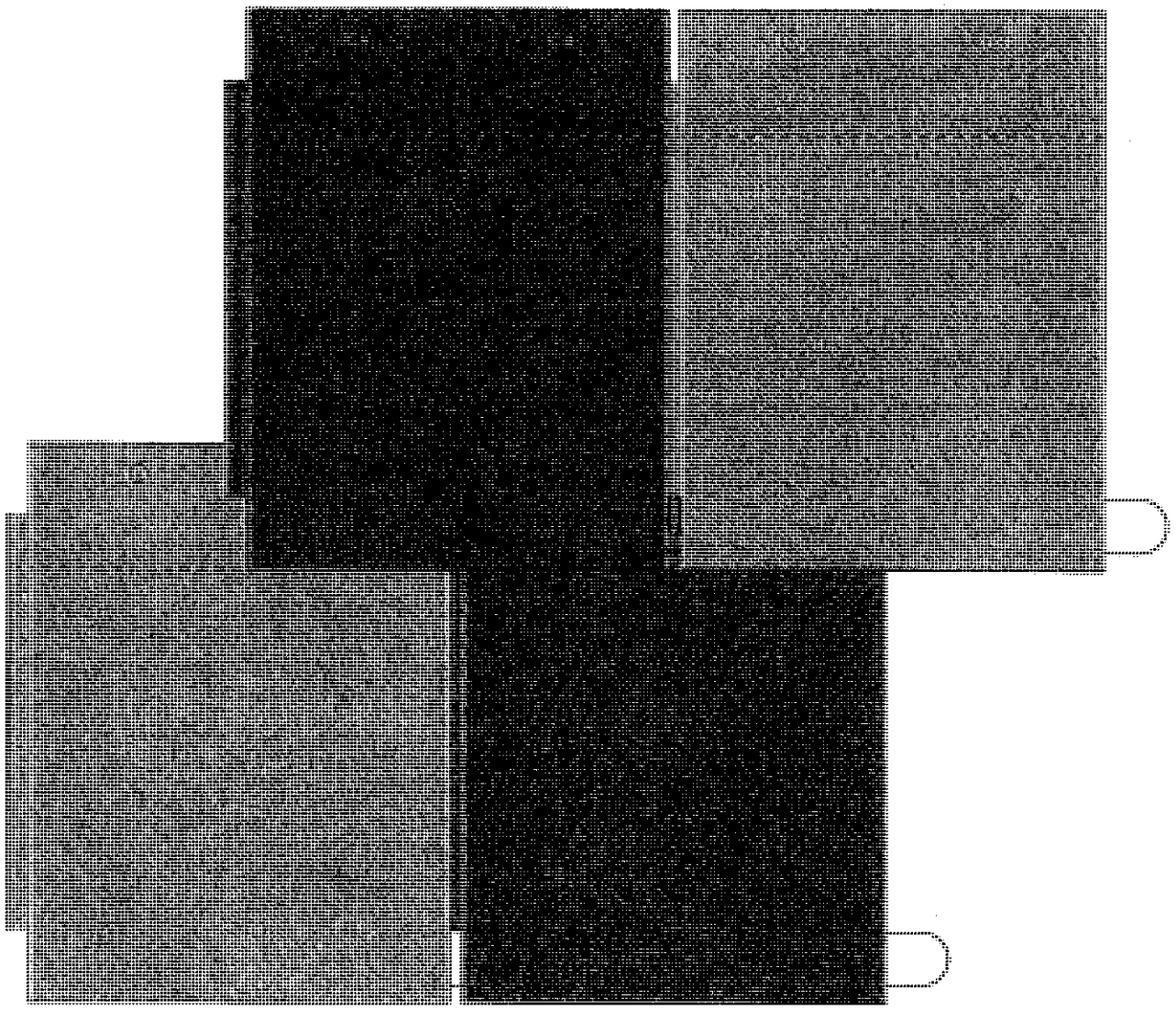

END OF THIS ACCEPTANCE