MIAMI-DADE COUNTY
DEPARTMENT OF PERMITTING, ENVIRONMENT, AND REGULATORY AFFAIRS (PERA)
BOARD AND CODE ADMINISTRATION DIVISION

MIAMI-DADE COUNTY
PRODUCT CONTROL SECTION
11805 SW 26 Street, Room 208
Miami, Florida 33175-2474
T (786) 315-2590 F (786) 315-2599
www.miamidade.gov/pera/

NOTICE OF ACCEPTANCE (NOA)

SMI Aluminum Systems, LLC
11305 NW 128 Street
Medley, FL 33178

SCOPE:

This NOA is being issued under the applicable rules and regulations governing the use of construction materials. The documentation submitted has been reviewed and accepted by Miami-Dade County PERA-Product Control Section to be used in Miami Dade County and other areas where allowed by the Authority Having Jurisdiction (AHJ).

This NOA shall not be valid after the expiration date stated below. The Miami-Dade County Product Control Section (In Miami Dade County) and/or the AHJ (in areas other than Miami Dade County) reserve the right to have this product or material tested for quality assurance purposes. If this product or material fails to perform in the accepted manner, the manufacturer will incur the expense of such testing and the AHJ may immediately revoke, modify, or suspend the use of such product or material within their jurisdiction. PERA reserves the right to revoke this acceptance, if it is determined by Miami-Dade County Product Control Section that this product or material fails to meet the requirements of the applicable building code.

This product is approved as described herein, and has been designed to comply with the Florida Building Code, including the High Velocity Hurricane Zone.

DESCRIPTION: Series "SMI-175" Aluminum Window Wall System - L.M.I.

APPROVAL DOCUMENT: Drawing No. **W03-64**, titled "Series SMI-175 Alum Window Wall (L.M.I.)", sheets 1 through 10 of 10, dated 08/11/03 with revision E dated 07/19/11, prepared by Al-Farooq Corporation, signed and sealed by Javad Ahmad, P.E., bearing the Miami-Dade County Product Control Revision stamp with the Notice of Acceptance number and expiration date by the Miami-Dade County Product Control Section.

MISSILE IMPACT RATING: Large and Small Missile Impact Resistant

LABELING: Each unit shall bear a permanent label with the manufacturer's name or logo, city, state, model/series, and following statement: "Miami-Dade County Product Control Approved", unless otherwise noted herein.

RENEWAL of this NOA shall be considered after a renewal application has been filed and there has been no change in the applicable building code negatively affecting the performance of this product.

TERMINATION of this NOA will occur after the expiration date or if there has been a revision or change in the materials, use, and/or manufacture of the product or process. Misuse of this NOA as an endorsement of any product, for sales, advertising or any other purposes shall automatically terminate this NOA. Failure to comply with any section of this NOA shall be cause for termination and removal of NOA.

ADVERTISEMENT: The NOA number preceded by the words Miami-Dade County, Florida, and followed by the expiration date may be displayed in advertising literature. If any portion of the NOA is displayed, then it shall be done in its entirety.

INSPECTION: A copy of this entire NOA shall be provided to the user by the manufacturer or its distributors and shall be available for inspection at the job site at the request of the Building Official.

This NOA **revises NOA # 07-0924.02** and consists of this page 1 and evidence pages E-1, E-2 and E-3, as well as approval document mentioned above.

The submitted documentation was reviewed by **Manuel Perez, P.E.**

MIAMI-DADE COUNTY APPROVED

NOA No. 11-0412.05
Expiration Date: November 21, 2012
Approval Date: October 20, 2011

SMI Aluminum Systems, LLC

NOTICE OF ACCEPTANCE: EVIDENCE SUBMITTED

A. DRAWINGS

1. Manufacturer's die drawings and sections.
2. Drawing No **W03-64**, titled "Series SMI-175 Alum Window Wall (LMI)", sheets 1 through 10 of 10, prepared by Al-Farooq Corporation, dated 08/11/03 with revision E dated 07/19/11, signed and sealed by Javad Ahmad , P.E.

B. TESTS

1. Test reports on: 1) Air Infiltration Test, per FBC, TAS 202-94
   2) Uniform Static Air Pressure Test, Loading per FBC, TAS 202-94
   3) Water Resistance Test, per FBC, TAS 202-94
   4) Large Missile Impact Test per FBC, TAS 201-94
   5) Cyclic Wind Pressure Loading per FBC, TAS 203-94
   6) Forced Entry Test, per FBC 2411.3.2.1and TAS 202-94

   along with marked-up drawings and installation diagram of an aluminum window wall system, prepared by Fenestration Testing Laboratory, Inc., Test Report No. **FTL-3721** dated 03/26/2003, signed and sealed by Joseph Chan, P.E.
   (Submitted under NOA#03-0925.01)
2. Test reports on: 1) Air Infiltration Test, per FBC, TAS 202-94
   2) Uniform Static Air Pressure Test, Loading per FBC, TAS 202-94
   3) Water Resistance Test, per FBC, TAS 202-94
   4) Large Missile Impact Test per FBC, TAS 201-94
   5) Cyclic Wind Pressure Loading per FBC, TAS 203-94
   6) Forced Entry Test, per FBC 2411.3.2.1and TAS 202-94

   along with marked-up drawings and installation diagram of an aluminum window wall system, prepared by Fenestration Testing Laboratory, Inc., Test Report No. **FTL-3833** dated 08/05/2003, signed and sealed by Joseph Chan, P.E.
   (Submitted under NOA#03-0925.01)
3. Test reports on: 1) Air Infiltration Test, per FBC, TAS 202-94
   2) Uniform Static Air Pressure Test, Loading per FBC, TAS 202-94
   3) Water Resistance Test, per FBC, TAS 202-94
   4) Large Missile Impact Test per FBC, TAS 201-94
   5) Cyclic Wind Pressure Loading per FBC, TAS 203-94
   6) Forced Entry Test, per FBC 3603.2 (b) and TAS 202-94

   along with marked-up drawings and installation diagram of an aluminum window wall system, prepared by Fenestration Testing Laboratory, Inc., Test Report No. **FTL-3465** dated 7/17/2002, signed and sealed by James Worth, P.E.
   (Submitted under NOA#03-0925.01)

Manuel Perez, P.E.
Product Control Examiner
NOA No. 11-0412.05
Expiration Date: November 21, 2012
Approval Date: October 20, 2011

NOTICE OF ACCEPTANCE: EVIDENCE SUBMITTED

B. TESTS (CONTINUED)

4. Test reports on: 1) Air Infiltration Test per FBC, TAS 202-94
2) Uniform Static Air Pressure Test Loading per FBC, TAS 202-94
3) Water Resistance Test per FBC, TAS 202-94
4) Large Missile Impact Test per FBC, TAS 201-94
5) Cyclic Wind Pressure Loading per FBC, TAS 203-94
along with marked-up drawings and installation diagram of an aluminum window wall system, prepared by Fenestration Testing Laboratory, Inc., Test Reports No. **FTL-5070**, dated 10/05/06, signed and sealed by Marlin D. Brinson, P.E.
FOR REFERENCE ONLY

5. Test reports on: 1) Air Infiltration Test per FBC, TAS 202-94
2) Uniform Static Air Pressure Test Loading per FBC, TAS 202-94
3) Water Resistance Test per FBC, TAS 202-94
4) Large Missile Impact Test per FBC, TAS 201-94
5) Cyclic Wind Pressure Loading per FBC, TAS 203-94
6) Forced Entry Test, per FBC 2411.3.2.1 (b) and TAS 202-94
along with marked-up drawings and installation diagram of a aluminum outswing door, prepared by Fenestration Testing Laboratory, Inc., Test Reports No. **FTL-4267**, dated 08/13/04, signed and sealed by Edmundo Largaespada, P.E.
FOR REFERENCE ONLY (Submitted under previous NOA #05-0301.04)

6. Test reports on: 1) Air Infiltration Test per FBC, TAS 202-94
2) Uniform Static Air Pressure Test Loading per FBC, TAS 202-94
3) Water Resistance Test per FBC, TAS 202-94
4) Large Missile Impact Test per FBC, TAS 201-94
5) Cyclic Wind Pressure Loading per FBC, TAS 203-94
6) Forced Entry Test, per FBC 2411.3.2.1 (b) and TAS 202-94
along with marked-up drawings and installation diagram of a aluminum outswing door, prepared by Fenestration Testing Laboratory, Inc., Test Reports No. **FTL-4257**, dated 07/18/04, signed and sealed by Edmundo Largaespada, P.E.
FOR REFERENCE ONLY (Submitted under previous NOA #10-0511.02)

7. Test reports on: 1) Air Infiltration Test, per FBC, TAS 202-94
2) Uniform Static Air Pressure Test, Loading per FBC TAS 202-94
3) Water Resistance Test, per FBC, TAS 202-94(Not performed)
4) Large Missile Impact Test per FBC, TAS 201-94
5) Cyclic Wind Pressure Loading per FBC, TAS 203-94
6) Forced Entry Test, Per FBC 2411 3.2.1 and TAS 202-94

Manuel Perez, P.E.
Product Control Examiner
NOA No. 11-0412.05
Expiration Date: November 21, 2012
Approval Date: October 20, 2011

NOTICE OF ACCEPTANCE: EVIDENCE SUBMITTED

B. TESTS (CONTINUED)

7. along with marked-up drawings and installation diagram of a aluminum outswing XXOO door system, prepared by Fenestration Testing Laboratory, Inc., Test Report No. **FTL-3997,** dated 12/04/03, signed and sealed by Edmundo Largaespada, P.E. ***FOR REFERENCE ONLY (Submitted under previous NOA #08-1202.14)***

C. CALCULATIONS:

1. Anchor verification calculations and structural analysis, complying with FBC-2007 and FBC-2010, prepared by Al-Farooq Corporation, dated 02/16/11 and 07/19/11, signed and sealed by Javad Ahmad, P.E.
2. Glazing complies with ASTM E1300-04.

D. QUALITY ASSURANCE

1. Miami-Dade Department of Permitting, Environment, and Regulatory Affairs (PERA).

E. MATERIAL CERTIFICATIONS

1. Notice of Acceptance No. **09-0223.05** issued to **Solutia, Inc.** for their "**Saflex Multi-layer Glass Interlayer**" dated 04/08/09, expiring on 04/08/14.
2. Notice of Acceptance No. **10-0331.02** issued to **Cytec Industries, Inc.** for their "**Uvekol S Laminated Glass Interlayer**", dated 05/05/10, expiring on 02/08/14.

F. STATEMENTS

1. Statement letter of conformance, no financial interest, dated 09/28/11, signed and sealed by Javad Ahmad, P.E.
2. Laboratory compliance letter for Test Report No. **FTL-3465**, issued by Fenestration Testing Laboratory, Inc., dated 8/8/02, signed and sealed by James Worth, P.E. ***(Submitted under NOA#03-0925.01)***
3. Laboratory compliance letter for Test Report No. **FTL-3721** issued by Fenestration Testing Laboratory, Inc., dated 4/15/03, signed and sealed by Joseph Chan, P.E. ***(Submitted under NOA#03-0925.01)***
4. Laboratory compliance letter for Test Report No. **FTL-3833** issued by Fenestration Testing Laboratory, Inc., dated 8/7/03, signed and sealed by Joseph Chan, P.E. ***(Submitted under NOA#03-0925.01)***
5. Asset purchase agreement dated September, 2010, signed by seller: Mr. Jim Pande, Manager and buyer: Mr. Leon Silverstein, Manager (not signed by buyer).

G. OTHERS

1. Notice of Acceptance No. **07-0924.02**, issued to Smith Mountain Impact Systems by Pande Pane for their Series "SMI-175" Aluminum Window Wall System - L.M.I., approved on 11/15/07 and expiring on 11/21/12.

Manuel Perez, P.E.
Product Control Examiner
NOA No. 11-0412.05
Expiration Date: November 21, 2012
Approval Date: October 20, 2011

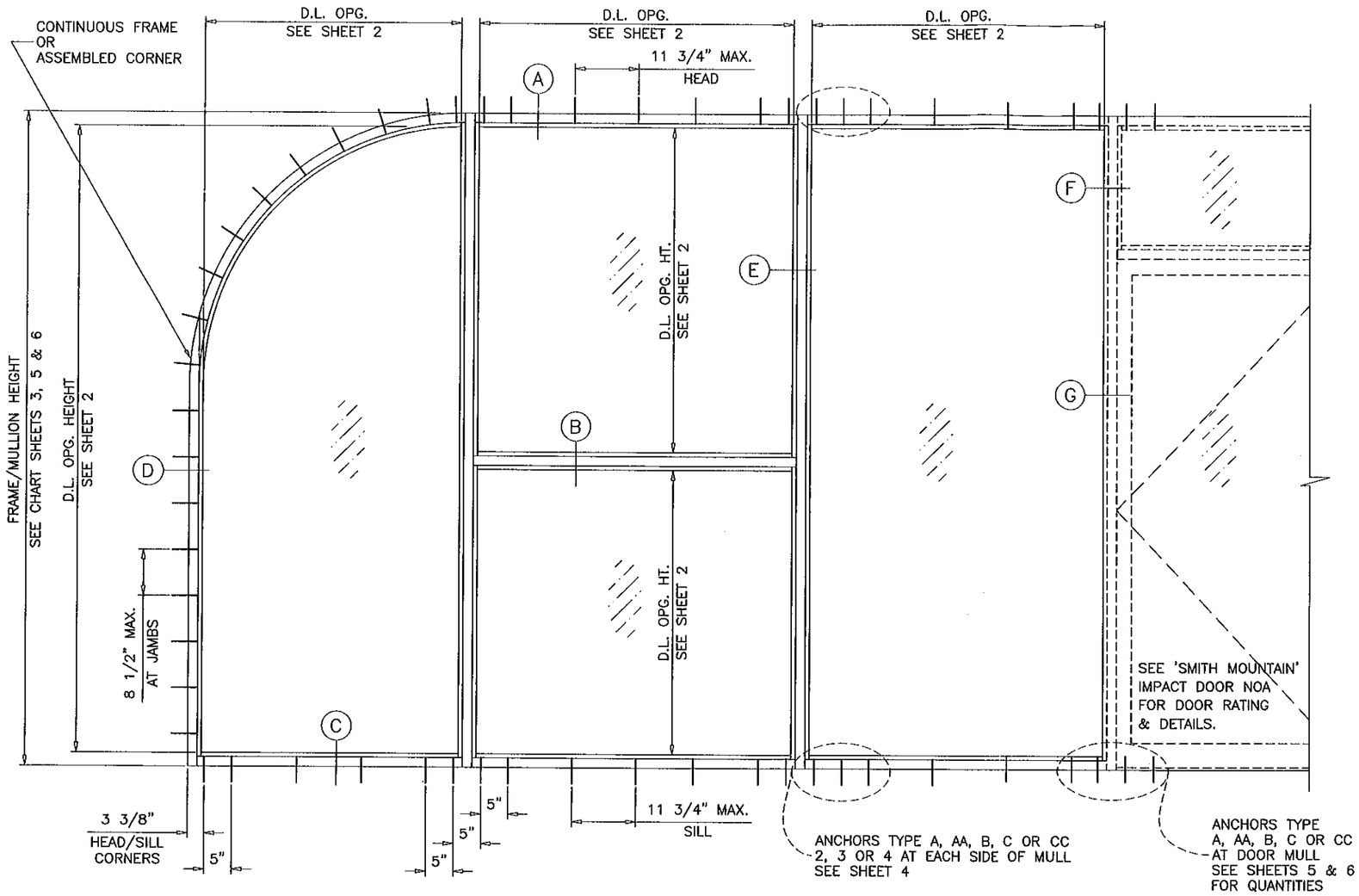

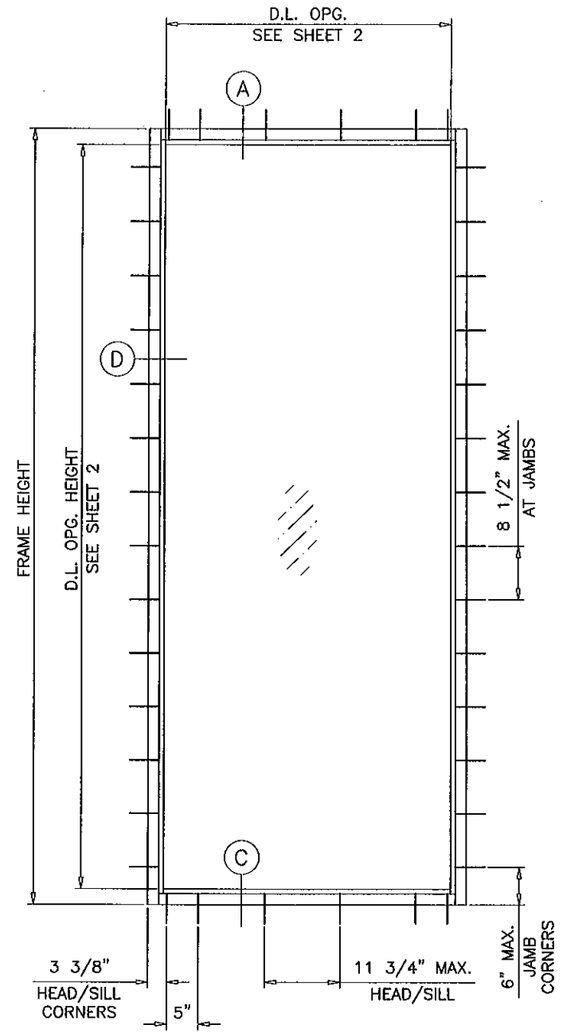

SERIES SMI-175 ALUM WINDOW WALL

THIS SYSTEM MAY BE USED IN CONJUNCTION WITH MIAMI-DADE COUNTY APPR'D LARGE MISSILE IMPACT RESISTANT DOORS. LOWER DESIGN PRESSURE FROM STOREFRONT OR DOOR APPROVAL WILL APPLY TO ENTIRE SYSTEM.

CODE REQUIREMENTS FOR SAFEGUARDS MUST BE OBSERVED.

THIS PRODUCT HAS BEEN DESIGNED AND TESTED TO COMPLY WITH THE REQUIREMENTS OF THE FLORIDA BUILDING CODE 2007/2010 EDITION INCLUDING HIGH VELOCITY HURRICANE ZONE (HVHZ).

WOOD BUCKS BY OTHERS, MUST BE ANCHORED PROPERLY TO TRANSFER LOADS TO THE STRUCTURE.

ANCHORS SHALL BE AS LISTED, SPACED AS SHOWN ON DETAILS, ANCHORS EMBEDMENT TO BASE MATERIAL SHALL BE BEYOND WALL DRESSING OR STUCCO.

ANCHORING OR LOADING CONDITIONS NOT SHOWN IN THESE DETAILS ARE NOT PART OF THIS APPROVAL.

A LOAD DURATION INCREASE IS USED IN DESIGN OF ANCHORS INTO WOOD ONLY.

MATERIALS INCLUDING BUT NOT LIMITED TO STEEL/METAL SCREWS, THAT COME INTO CONTACT WITH OTHER DISSIMILAR MATERIALS SHALL MEET THE REQUIREMENTS OF 2007 FLORIDA BLDG. CODE SECTION 2003.8.4.

TYPICAL ELEVATIONS

THIS SYSTEM IS RATED FOR LARGE MISSILE IMPACT. SHUTTERS ARE NOT REQUIRED.

INSTRUCTIONS:

USE CHARTS AS FOLLOWS.

STEP 1 DETERMINE DESIGN WIND LOAD REQUIREMENT BASED ON WIND VELOCITY, BLDG. HEIGHT, WIND ZONE USING APPLICABLE ASCE 7 STANDARD.

STEP 2 SEE CHARTS ON SHEET 2 FOR DESIGN LOAD CAPACITY OF DESIRED GLASS SIZE.

STEP 3 CHECK MULLION CAPACITY FOR A GIVEN SPACING AND HEIGHT USING CHARTS ON SHEET 3 FOR STOREFRONT MULLION AND SHEET 5 & 6 FOR DOOR MULLION. THE CAPACITY SHOULD EXCEED THE DESIGN LOAD.

STEP 4 USING CHART ON SHEETS 4 SELECT ANCHOR OPTION WITH DESIGN RATING MORE THAN DESIGN LOAD SPECIFIED IN STEP 1 ABOVE.

STEP 5 THE LOWEST VALUE RESULTING FROM STEPS 2, 3 AND 4 SHALL APPLY TO ENTIRE SYSTEM.

SINGLE 'O' PANEL:
FRAME WIDTH = D.L.O. WIDTH + 5.00"
FRAME HEIGHT = D.L.O. HEIGHT + 5.00"

WINDOW WALL SYSTEM WITH GLASS TYPES 'C' & 'D' COMPLY WITH REQUIREMENTS OF ANSI Z97.1.

LAMINATED GLASS LARGE MISSILE IMPACT

Engr: JAVAD AHMAD
CIVIL
FLA. PE # 70592
C.A.N. 3538

SEP 29 2011

PRODUCT REVISED
as complying with the Florida Building Code
Acceptance No 11-0412.05
Expiration Date Nov. 21, 2012
By Marcelo Burgos
Miami Dade Product Control

AL-FAROOQ CORPORATION
ENGINEERS & PRODUCT DEVELOPMENT
1235 S.W. 87 AVE
MIAMI, FLORIDA 33174
TEL. (305) 264-8100 FAX. (305) 262-6978
COMP-ANL\W03-64SM

SERIES SMI-175 ALUM WINDOW WALL (L.M.I.)

SMI Aluminum Systems, LLC.
11305 N.W. 128 STREET
MEDLEY, FL. 33178
TEL. (305) 888-6288 FAX. (305) 888-6289

revisions:

no	date	by	description
A	10.23.03		NO CHANGE THIS SHEET
B	02.13.04		NOTES REV.
C	09.26.05		UPDATED FOR 2004 FBC
D	02.15.11		UPDATED FOR 2007 FBC
E	07.19.11		NO CHANGE THIS SHEET

date: 08-11-03
scale: 1/2"=1'-0"
dr. by: HAMID
chk. by:

drawing no. W03-64

GLASS LOAD CAPACITY – PSF

NOMINAL DIMS.		GLASS TYPE 'A'	GLASS TYPE 'B'	GLASS TYPE 'C'	GLASS TYPE 'D'	GLASS TYPE 'E'
D.L.O. WIDTH	D.L.O. HEIGHT	EXT.(+)&INT.(–)	EXT.(+)&INT.(–)	EXT.(+)&INT.(–)	EXT.(+)&INT.(–)	EXT.(+)&INT.(–)
20"	74"	63.0	63.0	120.0	100.0	90.0
26"		63.0	63.0	120.0	100.0	90.0
32"		63.0	63.0	120.0	100.0	90.0
38"		63.0	63.0	120.0	100.0	90.0
44"		63.0	–	120.0	100.0	90.0
50"		63.0	–	120.0	100.0	90.0
56"		63.0	–	100.0	100.0	90.0
60"		63.0	–	100.0	100.0	–
66"		–	–	100.0	100.0	–
20"	80"	63.0	63.0	120.0	100.0	90.0
26"		63.0	63.0	120.0	100.0	90.0
32"		63.0	63.0	120.0	100.0	90.0
38"		63.0	–	120.0	100.0	90.0
44"		63.0	–	120.0	100.0	90.0
50"		63.0	–	120.0	100.0	90.0
56"		63.0	–	100.0	100.0	–
60"		–	–	100.0	100.0	–
66"		–	–	100.0	100.0	–
20"	86"	63.0	63.0	120.0	100.0	90.0
26"		63.0	63.0	120.0	100.0	90.0
32"		63.0	63.0	120.0	100.0	90.0
38"		63.0	–	120.0	100.0	90.0
44"		63.0	–	120.0	100.0	90.0
50"		63.0	–	100.0	100.0	–
56"		–	–	100.0	100.0	–
60"		–	–	100.0	100.0	–
66"		–	–	100.0	100.0	–
20"	92"	63.0	63.0	120.0	100.0	90.0
26"		63.0	63.0	120.0	100.0	90.0
32"		63.0	63.0	120.0	100.0	90.0
38"		63.0	–	120.0	100.0	90.0
44"		63.0	–	100.0	100.0	90.0
50"		63.0	–	100.0	100.0	–
56"		–	–	100.0	100.0	–
60"		–	–	100.0	100.0	–
66"		–	–	100.0	100.0	–

GLASS LOAD CAPACITY – PSF

NOMINAL DIMS.		GLASS TYPE 'A'	GLASS TYPE 'B'	GLASS TYPE 'C'	GLASS TYPE 'D'	GLASS TYPE 'E'
D.L.O. WIDTH	D.L.O. HEIGHT	EXT.(+)&INT.(–)	EXT.(+)&INT.(–)	EXT.(+)&INT.(–)	EXT.(+)&INT.(–)	EXT.(+)&INT.(–)
20"	98"	63.0	63.0	120.0	100.0	90.0
26"		63.0	63.0	120.0	100.0	90.0
32"		63.0	–	120.0	100.0	90.0
38"		63.0	–	120.0	100.0	90.0
44"		63.0	–	100.0	100.0	–
50"		–	–	100.0	100.0	–
56"		–	–	100.0	100.0	–
60"		–	–	100.0	100.0	–
66"		–	–	100.0	100.0	–
20"	104"	63.0	63.0	120.0	100.0	90.0
26"		63.0	63.0	120.0	100.0	90.0
32"		63.0	–	120.0	100.0	90.0
38"		63.0	–	120.0	100.0	90.0
44"		63.0	–	100.0	100.0	–
50"		–	–	100.0	100.0	–
56"		–	–	100.0	100.0	–
60"		–	–	100.0	100.0	–
20"	110"	63.0	63.0	120.0	100.0	90.0
26"		63.0	63.0	120.0	100.0	90.0
32"		63.0	–	120.0	100.0	90.0
38"		63.0	–	100.0	100.0	–
44"		–	–	100.0	100.0	–
50"		–	–	100.0	100.0	–
56"		–	–	100.0	100.0	–
20"	116"	63.0	63.0	120.0	100.0	90.0
26"		63.0	–	120.0	100.0	90.0
32"		63.0	–	120.0	100.0	90.0
38"		63.0	–	100.0	100.0	–
44"		–	–	100.0	100.0	–
50"		–	–	100.0	100.0	–
56"		–	–	97.9	100.0	–
34–1/2"	116–1/2"	–	–	120.0	–	–
63"	63"	–	–	120.0	–	–
60"	67"	–	–	120.0	–	–
57"	69"	–	–	120.0	–	–
54"	74"	–	–	120.0	–	–

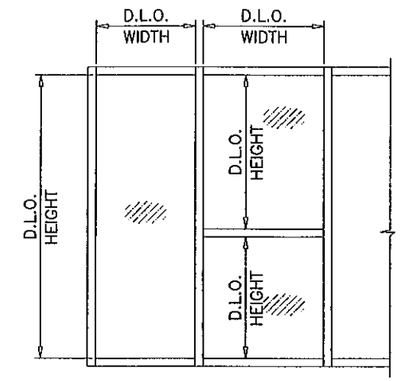

NOTE:
GLASS CAPACITIES ON THIS SHEET ARE BASED ON ASTM E1300–04 (3 SEC. GUSTS).

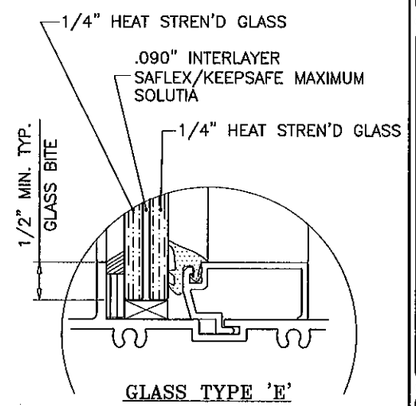

GLASS TYPE 'E'

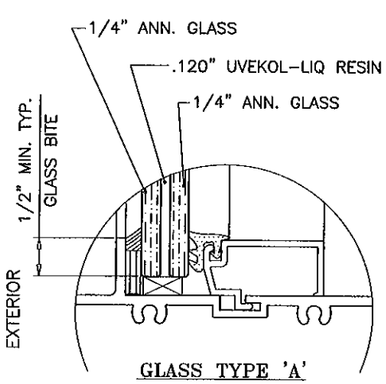

GLASS TYPE 'A'

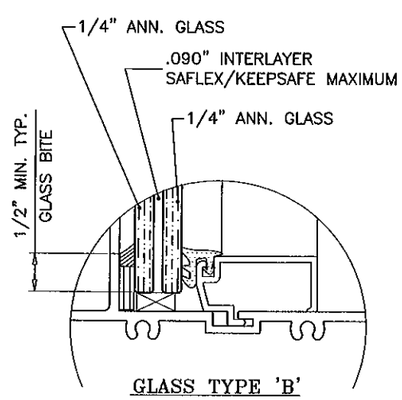

GLASS TYPE 'B'

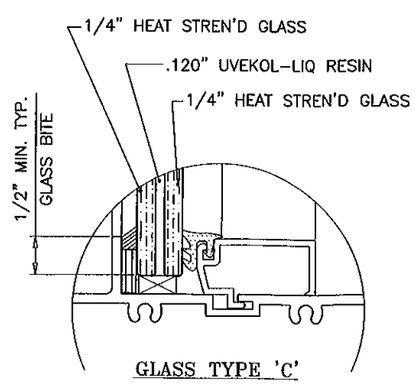

GLASS TYPE 'C'

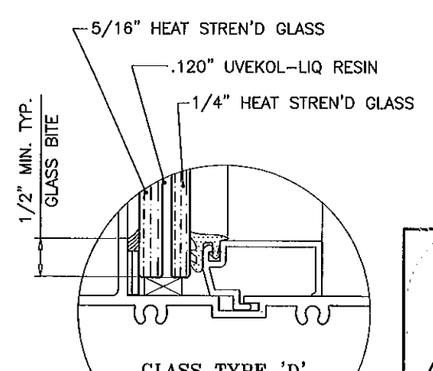

GLASS TYPE 'D'

GLAZING OPTIONS

Engr: JAVAD AHMAD
CIVIL
FLA. PE # 70592
C.A.N. 3538

SEP 29 2011

PRODUCT REVISED
as complying with the Florida Building Code
Acceptance No 11-0412.05
Expiration Date Nov. 21, 2012
By Manuel Perez
Miami Dade Product Control

AL-FAROOQ CORPORATION
ENGINEERS & PRODUCT DEVELOPMENT
1235 S.W. 87 AVE
MIAMI, FLORIDA 33174
TEL. (305) 264-8100 FAX. (305) 262-6978

COMP–ANL\W03–64SM

SERIES SMI–175 ALUM WINDOW WALL (L.M.I.)

SMI Aluminum Systems, LLC.
11305 N.W. 128 STREET
MEDLEY, FL. 33178
TEL. (305) 888–6288 FAX. (305) 888–6289

revisions:			
no	date	by	description
A	10.23.03		NO CHANGE THIS SHEET
B	02.13.04		GLASS TYPE E ADDED
C	09.26.05		NOTE ADDED
D	02.15.11		UPDATED FOR 2007 FBC
E	07.19.11		NO CHANGE THIS SHEET

date: 08–11–03
scale: 1/2" = 1"
dr. by: HAMID
chk. by:

drawing no.
W03–64

MULLION LOAD CAPACITY – PSF
WITHOUT INTERMEDIATE HORIZONTALS

NOMINAL DIMS.		WITHOUT REINFORCING		WITH REINFORCING	
WIDTH (W)	FRAME HEIGHT	EXT.(+)	INT.(–)	EXT.(+)	INT.(–)
24"	72"	100.0	100.0	100.0	120.0
30"		100.0	100.0	100.0	120.0
36"		100.0	100.0	100.0	120.0
42"		100.0	100.0	100.0	120.0
48"		100.0	100.0	100.0	120.0
54"		100.0	100.0	100.0	120.0
60"		100.0	100.0	100.0	120.0
66"		100.0	100.0	90.0	100.0
24"	78"	100.0	100.0	100.0	120.0
30"		100.0	100.0	100.0	120.0
36"		100.0	100.0	100.0	120.0
42"		100.0	100.0	100.0	120.0
48"		100.0	100.0	100.0	120.0
54"		100.0	100.0	100.0	120.0
60"		100.0	100.0	90.0	100.0
66"		100.0	100.0	90.0	100.0
24"	84"	100.0	100.0	100.0	120.0
30"		100.0	100.0	100.0	120.0
36"		100.0	100.0	100.0	120.0
42"		100.0	100.0	100.0	120.0
48"		100.0	100.0	100.0	120.0
54"		100.0	100.0	100.0	119.9
60"		99.9	99.9	90.0	100.0
66"		–	–	90.0	100.0
24"	90"	100.0	100.0	100.0	120.0
30"		100.0	100.0	100.0	120.0
36"		100.0	100.0	100.0	120.0
42"		100.0	100.0	100.0	120.0
48"		98.7	98.7	100.0	120.0
54"		90.2	90.2	90.0	100.0
60"		–	–	90.0	100.0
66"		–	–	90.0	100.0
24"	96"	100.0	100.0	100.0	120.0
30"		100.0	100.0	100.0	120.0
36"		100.0	100.0	100.0	120.0
42"		95.0	95.0	100.0	120.0
48"		84.9	84.9	90.0	100.0
54"		77.3	77.3	90.0	100.0
60"		–	–	90.0	100.0
66"		–	–	90.0	100.0
24"	102"	100.0	100.0	100.0	120.0
30"		100.0	100.0	100.0	120.0
36"		91.1	91.1	100.0	120.0
42"		79.5	79.5	100.0	120.0
48"		71.1	71.1	90.0	100.0
54"		–	–	90.0	100.0
60"		–	–	90.0	100.0
66"		–	–	90.0	100.0

MULLION LOAD CAPACITY – PSF
WITHOUT INTERMEDIATE HORIZONTALS

NOMINAL DIMS.		WITHOUT REINFORCING		WITH REINFORCING	
WIDTH (W)	FRAME HEIGHT	EXT.(+)	INT.(–)	EXT.(+)	INT.(–)
24"	108"	100.0	100.0	100.0	120.0
30"		90.3	90.3	100.0	120.0
36"		76.3	76.3	100.0	120.0
42"		66.5	66.5	100.0	119.9
48"		59.3	59.3	90.0	100.0
54"		–	–	90.0	100.0
60"		–	–	90.0	99.2
66"		–	–	90.0	92.5
24"	114"	94.7	94.7	100.0	120.0
30"		76.5	76.5	100.0	120.0
36"		64.6	64.6	100.0	120.0
42"		56.2	56.2	100.0	100.0
48"		–	–	90.0	100.0
54"		–	–	90.0	96.0
60"		–	–	88.0	88.0
24"	120"	81.1	81.1	100.0	120.0
30"		65.4	65.4	100.0	120.0
36"		55.1	55.1	100.0	120.0
42"		47.9	47.9	90.0	100.0
48"		–	–	90.0	95.3
54"		–	–	85.9	85.9
60"		–	–	78.7	78.7

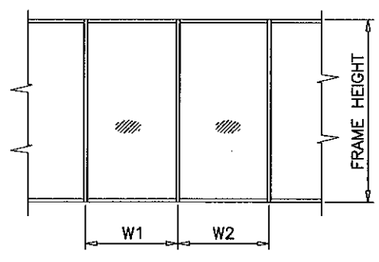

$$\text{WIDTH (W)} = \frac{W1 + W2}{2}$$

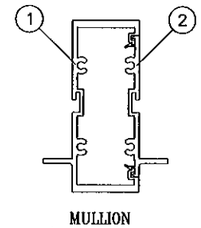

MULLION
W/O REINFORCING

Ix IN^4	Sx IN^3
5.3965	2.3108

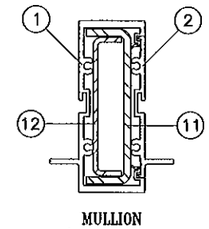

MULLION
W/ REINFORCING

	Ix IN^4	Sx IN^3
ALUMINUM	5.3965	2.3108
STEEL	3.3264	1.5933
TOTAL Ix ALUM + Ix STL X 2.9	14.7821	

MULLION LOAD CAPACITY – PSF
WITH INTERMEDIATE HORIZONTALS

NOMINAL DIMS.		WITHOUT REINFORCING		WITH REINFORCING	
WIDTH (W)	FRAME HEIGHT	EXT.(+)	INT.(–)	EXT.(+)	INT.(–)
24"	72"	100.0	100.0	100.0	120.0
30"		100.0	100.0	100.0	120.0
36"		100.0	100.0	100.0	120.0
42"		100.0	100.0	100.0	120.0
48"		100.0	100.0	100.0	120.0
54"		100.0	100.0	100.0	120.0
60"		100.0	100.0	100.0	120.0
66"		100.0	100.0	100.0	100.0
24"	78"	100.0	100.0	100.0	120.0
30"		100.0	100.0	100.0	120.0
36"		100.0	100.0	100.0	120.0
42"		100.0	100.0	100.0	120.0
48"		100.0	100.0	100.0	120.0
54"		100.0	100.0	100.0	120.0
60"		97.2	97.2	90.0	100.0
66"		88.4	88.4	90.0	100.0
24"	84"	100.0	100.0	100.0	120.0
30"		100.0	100.0	100.0	120.0
36"		100.0	100.0	100.0	120.0
42"		100.0	100.0	100.0	120.0
48"		100.0	100.0	100.0	120.0
54"		92.2	92.2	100.0	119.9
60"		83.0	83.0	90.0	100.0
66"		–	–	90.0	100.0
24"	90"	100.0	100.0	100.0	120.0
30"		100.0	100.0	100.0	120.0
36"		100.0	100.0	100.0	120.0
42"		100.0	100.0	100.0	120.0
48"		89.5	89.5	100.0	120.0
54"		79.6	79.6	90.0	100.0
60"		–	–	90.0	100.0
66"		–	–	90.0	100.0
24"	96"	100.0	100.0	100.0	120.0
30"		100.0	100.0	100.0	120.0
36"		100.0	100.0	100.0	120.0
42"		89.1	89.1	100.0	120.0
48"		78.0	78.0	90.0	100.0
54"		69.3	69.3	90.0	100.0
60"		–	–	90.0	100.0
66"		–	–	90.0	100.0
24"	102"	100.0	100.0	100.0	120.0
30"		100.0	100.0	100.0	120.0
36"		86.8	86.8	100.0	120.0
42"		74.4	74.4	100.0	120.0
48"		65.1	65.1	90.0	100.0
54"		–	–	90.0	100.0
60"		–	–	90.0	100.0
66"		–	–	90.0	90.9

MULLION LOAD CAPACITY – PSF
WITH INTERMEDIATE HORIZONTALS

NOMINAL DIMS.		WITHOUT REINFORCING		WITH REINFORCING	
WIDTH (W)	FRAME HEIGHT	EXT.(+)	INT.(–)	EXT.(+)	INT.(–)
24"	108"	100.0	100.0	100.0	120.0
30"		87.7	87.7	100.0	120.0
36"		73.1	73.1	100.0	120.0
42"		62.7	62.7	100.0	119.9
48"		54.8	54.8	90.0	100.0
54"		–	–	90.0	99.1
60"		–	–	89.2	89.2
66"		–	–	81.1	81.1
24"	114"	93.2	93.2	100.0	120.0
30"		74.6	74.6	100.0	120.0
36"		62.2	62.2	100.0	120.0
42"		53.3	53.3	90.0	100.0
48"		–	–	90.0	100.0
54"		–	–	89.0	89.0
60"		–	–	80.1	80.1
24"	120"	79.9	79.9	100.0	120.0
30"		64.0	64.0	100.0	120.0
36"		53.3	53.3	100.0	120.0
42"		45.7	45.7	90.0	100.0
48"		–	–	90.0	90.3
54"		–	–	80.3	80.3
60"		–	–	72.3	72.3

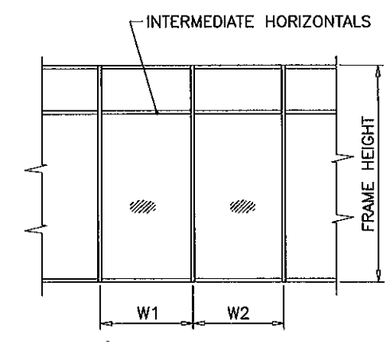

$$\text{WIDTH (W)} = \frac{W1 + W2}{2}$$

Engr: JAVAD AHMAD
CIVIL
FLA. PE # 70592
C.A.N. 3538

SEP 29 2011

PRODUCT REVISED
as complying with the Florida
Building Code
Acceptance No 11-0412.05
Expiration Date Nov. 21, 2012
By Manuel Perez
Miami Dade Product Control

AL-FAROOQ CORPORATION
ENGINEERS & PRODUCT DEVELOPMENT
1235 S.W. 87 AVE
MIAMI, FLORIDA 33174
TEL. (305) 264-8100 FAX. (305) 262-6978
COMP-ANL\W03-64SM

SERIES SMI-175 ALUM WINDOW WALL (L.M.I.)

SMI Aluminum Systems, LLC.
11305 N.W. 128 STREET
MEDLEY, FL. 33178
TEL. (305) 888-6288 FAX. (305) 888-6289

revisions:

no	date	by	description
A	10.23.03		NO CHANGE THIS SHEET
B	02.13.04		JAMB CHART ADDED
C	09.26.05		CHART REV.
D	02.15.11		UPDATED FOR 2007 FBC
E	07.19.11		REV. PER BNC COMMENTS

date: 08-11-03
scale: 1/2"=1'-0"
dr. by: HAMID
chk. by:

drawing no.
W03-64

ANCHOR LOAD CAPACITY – PSF
EXT.(+) & INT.(–)

NOMINAL DIMS.		ANCHORS TYPE 'A'			ANCHORS TYPE 'AA'			ANCHORS TYPE 'B'		ANCHORS TYPE 'C'			ANCHORS TYPE 'CC'		
WIDTH (W)	FRAME HEIGHT	A2	A3	A4	AA2	AA3	AA4	B2	B3	C2	C3	C4	CC2	CC3	CC4
24"	72"	120.0	120.0	120.0	120.0	120.0	120.0	120.0	120.0	120.0	120.0	120.0	120.0	120.0	120.0
30"		120.0	120.0	120.0	120.0	120.0	120.0	120.0	120.0	120.0	120.0	120.0	120.0	120.0	120.0
36"		105.3	120.0	120.0	120.0	120.0	120.0	120.0	120.0	120.0	120.0	120.0	120.0	120.0	120.0
42"		90.3	120.0	120.0	120.0	120.0	120.0	120.0	120.0	118.1	120.0	120.0	116.2	120.0	120.0
48"		79.0	118.5	120.0	120.0	120.0	120.0	120.0	120.0	103.3	120.0	120.0	101.7	120.0	120.0
54"		70.2	105.3	120.0	106.7	120.0	120.0	120.0	120.0	91.9	120.0	120.0	90.4	120.0	120.0
60"		63.2	94.8	120.0	96.0	120.0	120.0	120.0	120.0	82.7	120.0	120.0	81.3	120.0	120.0
66"		57.5	86.2	114.9	87.3	109.1	120.0	116.1	120.0	75.2	112.7	120.0	73.9	110.9	120.0
72"		52.7	79.0	105.3	80.0	100.0	120.0	106.4	120.0	68.9	103.3	120.0	67.8	101.7	120.0
24"	78"	120.0	120.0	120.0	120.0	120.0	120.0	120.0	120.0	120.0	120.0	120.0	120.0	120.0	120.0
30"		116.7	120.0	120.0	120.0	120.0	120.0	120.0	120.0	120.0	120.0	120.0	120.0	120.0	120.0
36"		97.2	120.0	120.0	120.0	120.0	120.0	120.0	120.0	120.0	120.0	120.0	120.0	120.0	120.0
42"		83.3	120.0	120.0	120.0	120.0	120.0	120.0	120.0	109.0	120.0	120.0	107.3	120.0	120.0
48"		72.9	109.4	120.0	110.8	120.0	120.0	120.0	120.0	95.4	120.0	120.0	93.8	120.0	120.0
54"		64.8	97.2	120.0	98.5	120.0	120.0	120.0	120.0	84.8	120.0	120.0	83.4	120.0	120.0
60"		58.3	87.5	116.7	88.6	110.8	120.0	117.9	120.0	76.3	114.5	120.0	75.1	112.6	120.0
66"		53.0	79.6	106.1	80.6	100.7	120.0	107.2	120.0	69.4	104.1	120.0	68.3	102.4	120.0
72"		48.6	72.9	97.2	73.8	92.3	120.0	98.3	120.0	63.6	95.4	120.0	62.6	93.8	120.0
24"	84"	120.0	120.0	120.0	120.0	120.0	120.0	120.0	120.0	120.0	120.0	120.0	120.0	120.0	120.0
30"		108.3	120.0	120.0	120.0	120.0	120.0	120.0	120.0	120.0	120.0	120.0	120.0	120.0	120.0
36"		90.3	120.0	120.0	120.0	120.0	120.0	120.0	120.0	118.1	120.0	120.0	116.2	120.0	120.0
42"		77.4	116.1	120.0	117.6	120.0	120.0	120.0	120.0	101.2	120.0	120.0	99.6	120.0	120.0
48"		67.7	101.6	120.0	102.9	120.0	120.0	120.0	120.0	88.6	120.0	120.0	87.1	120.0	120.0
54"		60.2	90.3	120.0	91.4	114.3	120.0	120.0	120.0	78.7	118.1	120.0	77.5	116.2	120.0
60"		54.2	81.3	108.3	82.3	102.9	120.0	109.5	120.0	70.9	106.3	120.0	69.7	104.6	120.0
66"		49.2	73.9	98.5	74.8	93.5	120.0	99.5	120.0	64.4	96.6	120.0	63.4	95.1	120.0
72"		45.1	67.7	90.3	68.6	85.7	114.3	91.2	120.0	59.0	88.6	118.1	58.1	87.1	116.2
24"	90"	120.0	120.0	120.0	120.0	120.0	120.0	120.0	120.0	120.0	120.0	120.0	120.0	120.0	120.0
30"		101.1	120.0	120.0	120.0	120.0	120.0	120.0	120.0	120.0	120.0	120.0	120.0	120.0	120.0
36"		84.3	120.0	120.0	120.0	120.0	120.0	120.0	120.0	110.2	120.0	120.0	108.4	120.0	120.0
42"		72.2	108.3	120.0	109.7	120.0	120.0	120.0	120.0	94.5	120.0	120.0	93.0	120.0	120.0
48"		63.2	94.8	120.0	96.0	120.0	120.0	120.0	120.0	82.7	120.0	120.0	81.3	120.0	120.0
54"		56.2	84.3	112.4	85.3	106.7	120.0	113.5	120.0	73.5	110.2	120.0	72.3	108.4	120.0
60"		50.6	75.8	101.1	76.8	96.0	120.0	102.2	120.0	66.1	99.2	120.0	65.1	97.6	120.0
66"		46.0	68.9	91.9	69.8	87.3	116.4	92.9	120.0	60.1	90.2	120.0	59.2	88.7	118.3
72"		42.1	63.2	84.3	64.0	80.0	106.7	85.2	120.0	55.1	82.7	110.2	54.2	81.3	108.4
24"	96"	118.5	120.0	120.0	120.0	120.0	120.0	120.0	120.0	120.0	120.0	120.0	120.0	120.0	120.0
30"		94.8	120.0	120.0	120.0	120.0	120.0	120.0	120.0	120.0	120.0	120.0	120.0	120.0	120.0
36"		79.0	118.5	120.0	120.0	120.0	120.0	120.0	120.0	103.3	120.0	120.0	101.7	120.0	120.0
42"		67.7	101.6	120.0	102.9	120.0	120.0	120.0	120.0	88.6	120.0	120.0	87.1	120.0	120.0
48"		59.3	88.9	118.5	90.0	112.5	120.0	119.8	120.0	77.5	116.3	120.0	76.3	114.4	120.0
54"		52.7	79.0	105.3	80.0	100.0	120.0	106.4	120.0	68.9	103.3	120.0	67.8	101.7	120.0
60"		47.4	71.1	94.8	72.0	90.0	120.0	95.8	120.0	62.0	93.0	120.0	61.0	91.5	120.0
66"		43.1	64.6	86.2	65.5	81.8	109.1	87.1	120.0	56.4	84.5	112.7	55.5	83.2	110.9
72"		39.5	59.3	79.0	60.0	75.0	100.0	79.8	119.8	51.7	77.5	103.3	50.8	76.3	101.7
24"	102"	111.5	120.0	120.0	120.0	120.0	120.0	120.0	120.0	120.0	120.0	120.0	120.0	120.0	120.0
30"		89.2	120.0	120.0	120.0	120.0	120.0	120.0	120.0	116.7	120.0	120.0	114.8	120.0	120.0
36"		74.4	111.5	120.0	112.9	120.0	120.0	120.0	120.0	97.3	120.0	120.0	95.7	120.0	120.0
42"		63.7	95.6	120.0	96.8	120.0	120.0	120.0	120.0	83.4	120.0	120.0	82.0	120.0	120.0
48"		55.8	83.6	111.5	84.7	105.9	120.0	112.7	120.0	72.9	109.4	120.0	71.8	107.6	120.0
54"		49.6	74.4	99.1	75.3	94.1	120.0	100.2	120.0	64.8	97.3	120.0	63.8	95.7	120.0
60"		44.6	66.9	89.2	67.8	84.7	112.9	90.2	120.0	58.4	87.5	116.7	57.4	86.1	114.8
66"		40.6	60.8	81.1	61.6	77.0	102.7	82.0	120.0	53.0	79.6	106.1	52.2	78.3	104.4

ANCHOR LOAD CAPACITY – PSF
EXT.(+) & INT.(–)

NOMINAL DIMS.		ANCHORS TYPE 'A'			ANCHORS TYPE 'AA'			ANCHORS TYPE 'B'		ANCHORS TYPE 'C'			ANCHORS TYPE 'CC'		
WIDTH (W)	FRAME HEIGHT	A2	A3	A4	AA2	AA3	AA4	B2	B3	C2	C3	C4	CC2	CC3	CC4
24"	108"	105.3	120.0	120.0	120.0	120.0	120.0	120.0	120.0	120.0	120.0	120.0	120.0	120.0	120.0
30"		84.3	120.0	120.0	120.0	120.0	120.0	120.0	120.0	110.2	120.0	120.0	108.4	120.0	120.0
36"		70.2	105.3	120.0	106.7	120.0	120.0	120.0	120.0	91.9	120.0	120.0	90.4	120.0	120.0
42"		60.2	90.3	120.0	91.4	114.3	120.0	120.0	120.0	78.7	118.1	120.0	77.5	116.2	120.0
48"		52.7	79.0	105.3	80.0	100.0	120.0	106.4	120.0	68.9	103.3	120.0	67.8	101.7	120.0
54"		46.8	70.2	93.6	71.1	88.9	118.5	94.6	120.0	61.2	91.9	120.0	60.2	90.4	120.0
60"		42.1	63.2	84.3	64.0	80.0	106.7	85.2	120.0	55.1	82.7	110.2	54.2	81.3	108.4
66"		38.3	57.5	76.6	58.2	72.7	97.0	77.4	116.1	50.1	75.2	100.2	49.3	73.9	98.6
24"	114"	99.8	120.0	120.0	120.0	120.0	120.0	120.0	120.0	120.0	120.0	120.0	120.0	120.0	120.0
30"		79.8	119.7	120.0	120.0	120.0	120.0	120.0	120.0	104.4	120.0	120.0	102.7	120.0	120.0
36"		66.5	99.8	120.0	101.1	120.0	120.0	120.0	120.0	87.0	120.0	120.0	85.6	120.0	120.0
42"		57.0	85.5	114.0	86.6	108.3	120.0	115.2	120.0	74.6	111.9	120.0	73.4	110.1	120.0
48"		49.9	74.8	99.8	75.8	94.7	120.0	100.8	120.0	65.3	97.9	120.0	64.2	96.3	120.0
54"		44.4	66.5	88.7	67.4	84.2	112.3	89.6	120.0	58.0	87.0	116.0	57.1	85.6	114.2
60"		39.9	59.9	79.8	60.6	75.8	101.1	80.7	120.0	52.2	78.3	104.4	51.4	77.1	102.7
24"	120"	94.8	120.0	120.0	120.0	120.0	120.0	120.0	120.0	120.0	120.0	120.0	120.0	120.0	120.0
30"		75.8	113.8	120.0	115.2	120.0	120.0	120.0	120.0	99.2	120.0	120.0	97.6	120.0	120.0
36"		63.2	94.8	120.0	96.0	120.0	120.0	120.0	120.0	82.7	120.0	120.0	81.3	120.0	120.0
42"		54.2	81.3	108.3	82.3	102.9	120.0	109.5	120.0	70.9	106.3	120.0	69.7	104.6	120.0
48"		47.4	71.1	94.8	72.0	90.0	120.0	95.8	120.0	62.0	93.0	120.0	61.0	91.5	120.0
54"		42.1	63.2	84.3	64.0	80.0	106.7	85.2	120.0	55.1	82.7	110.2	54.2	81.3	108.4
60"		37.9	56.9	75.8	57.6	72.0	96.0	76.6	115.0	49.6	74.4	99.2	48.8	73.2	97.6

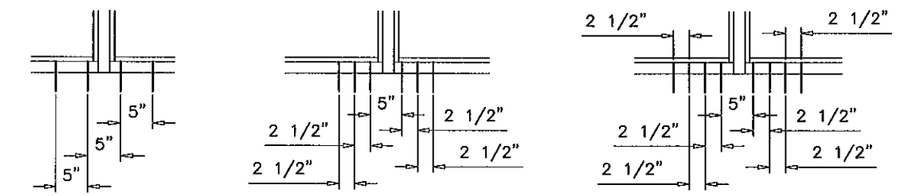

A2, AA2, B2, C2, CC2 — A3, AA3, B3, C3, CC3 — A4, AA4, C4, CC4

ANCHORS TYPES: SEE SHEET 7 FOR DESCRIPTION

A2 = (2) ANCHORS TYPE 'A' AT EACH SIDE OF MULLION
AA2 = (2) ANCHORS TYPE 'AA' AT EACH SIDE OF MULLION
B2 = (2) ANCHORS TYPE 'B' AT EACH SIDE OF MULLION
C2 = (2) ANCHORS TYPE 'C' AT EACH SIDE OF MULLION
CC2 = (2) ANCHORS TYPE 'CC' AT EACH SIDE OF MULLION

A3 = (3) ANCHORS TYPE 'A' AT EACH SIDE OF MULLION
AA3 = (3) ANCHORS TYPE 'AA' AT EACH SIDE OF MULLION
B3 = (3) ANCHORS TYPE 'B' AT EACH SIDE OF MULLION
C3 = (3) ANCHORS TYPE 'C' AT EACH SIDE OF MULLION
CC3 = (3) ANCHORS TYPE 'CC' AT EACH SIDE OF MULLION

A4 = (4) ANCHORS TYPE 'A' AT EACH SIDE OF MULLION
AA4 = (4) ANCHORS TYPE 'AA' AT EACH SIDE OF MULLION
C4 = (4) ANCHORS TYPE 'C' AT EACH SIDE OF MULLION
CC4 = (4) ANCHORS TYPE 'CC' AT EACH SIDE OF MULLION

ALL OTHER ANCHORS TO BE SPACED AS PER ELEVATION.

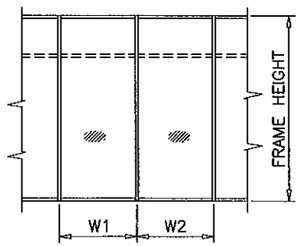

$$\text{WIDTH (W)} = \frac{W1 + W2}{2}$$

Engr: JAVAD AHMAD
CIVIL
FLA. PE # 70592
C.A.N. 3838

SEP 29 2011

PRODUCT REVISED
as complying with the Florida Building Code
Acceptance No 11-0412.05
Expiration Date Nov. 21, 2012
By Miami-Dade Product Control

AL-FAROOQ CORPORATION
ENGINEERS & PRODUCT DEVELOPMENT
1235 S.W. 87 AVE
MIAMI, FLORIDA 33174
TEL. (305) 264-8100 FAX. (305) 262-6978
COMP-ANL\W03-64SM

SERIES SMI-175 ALUM WINDOW WALL (L.M.I.)

SMI Aluminum Systems, LLC.
11305 N.W. 128 STREET
MEDLEY, FL. 33178
TEL. (305) 888-6288 FAX. (305) 888-6289

revisions:

no	date	by	description
A	10.23.03		NO CHANGE THIS SHEET
B	02.13.04		CHART REV.
C	09.26.05		CHART REV.
D	02.15.11		UPDATED FOR 2007 FBC
E	07.19.11		NO CHANGE THIS SHEET

date: 08-11-03
scale: 1/2"=1'-0"
dr. by: HAMID
chk. by:

drawing no. W03-64

DOOR MULLION LOAD CAPACITY		
NOMINAL DIMS.		W/O REINF.
WIDTH (W)	FRAME HEIGHT	EXT.(+) & INT.(–)
30"	81–3/4"	90.0
36"		90.0
42"		90.0
48"		90.0
30"	85–3/4"	90.0
36"		90.0
42"		90.0
48"		90.0
30"	91–3/4"	90.0
36"		90.0
42"		90.0
30"	96–3/4"	90.0
36"		90.0
42"		90.0
30"	97–3/4"	90.0
36"		90.0
42"		90.0

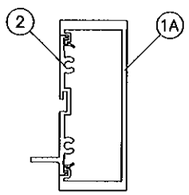

DOOR MULLION
WITHOUT REINFORCING

Ix IN^4	Sx IN^3
5.8937	2.6191

DOOR MULLION LOAD CAPACITY		
NOMINAL DIMS.		WITH REINF.
WIDTH (W)	FRAME HEIGHT	EXT.(+) & INT.(–)
24"	80"	100.0
30"		100.0
36"		100.0
42"		100.0
48"		100.0
54"		100.0
60"		100.0
24"	84"	100.0
30"		100.0
36"		100.0
42"		100.0
48"		100.0
54"		100.0
60"		100.0
24"	90"	100.0
30"		100.0
36"		100.0
42"		100.0
48"		100.0
54"		100.0
24"	96"	100.0
30"		100.0
36"		100.0
42"		100.0
48"		100.0
24"	102"	100.0
30"		100.0
36"		100.0
42"		100.0
48"		100.0
24"	108"	100.0
30"		100.0
36"		100.0
42"		100.0
24"	114"	100.0
30"		100.0
36"		100.0
42"		100.0
24"	120"	100.0
30"		100.0
36"		100.0
42"		100.0

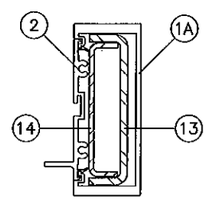

DOOR MULLION
WITH REINFORCING

	Ix IN^4	Sx IN^3
ALUMINUM	5.8937	2.6191
STEEL	2.7398	1.3915
TOTAL Ix ALUM + Ix STL X 2.9	13.8153	

ANCHOR TYPES	TOTAL NO. OF ANCHORS AT DOOR MULLION HEAD
A	8
AA	6
B	4
C	6
CC	6

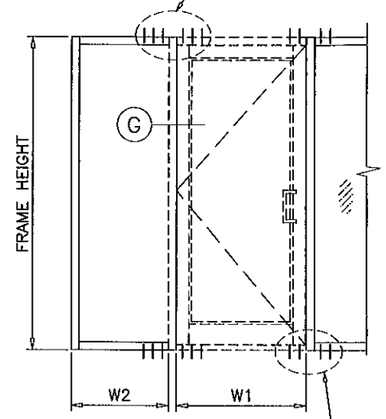

$$\text{WIDTH (W)} = \frac{W1 + W2}{2}$$

ANCHOR TYPES	TOTAL NO. OF ANCHORS AT DOOR MULLION SILL
A	8
AA	6
B	4
C	6
CC	6

SMITH MOUNTAIN
OUTSWING DOORS
SEE SEPARATE NOA

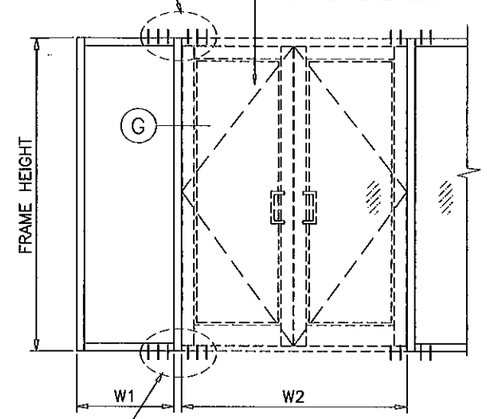

$$\text{WIDTH (W)} = \frac{W1}{2} + \frac{W2}{4}$$

ANCHOR TYPES	TOTAL NO. OF ANCHORS AT DOOR MULLION HEAD
A	8
AA	6
B	4
C	6
CC	6

SMITH MOUNTAIN
OUTSWING DOORS
SEE SEPARATE NOA

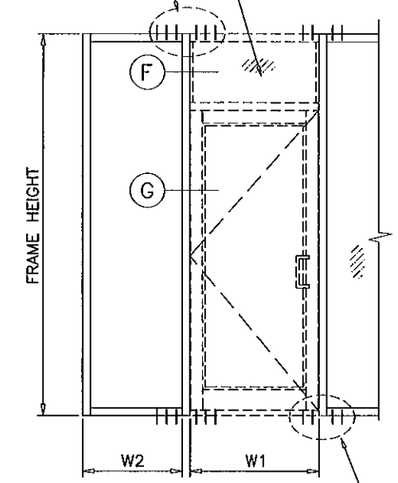

$$\text{WIDTH (W)} = \frac{W1 + W2}{2}$$

ANCHOR TYPES	TOTAL NO. OF ANCHORS AT DOOR MULLION SILL
A	8
AA	6
B	4
C	6
CC	6

Engr: JAVAD AHMAD
CIVIL
FLA. PE # 70592
C.A.N. 3538

SEP 29 2011

PRODUCT REVISED
as complying with the Florida
Building Code
Acceptance No 11-0412.05
Expiration Date Nov. 21, 2012
By Manuel Perez
Miami Dade Product Control

AL-FAROOQ CORPORATION
ENGINEERS & PRODUCT DEVELOPMENT
1235 S.W. 87 AVE
MIAMI, FLORIDA 33174
TEL. (305) 264-8100 FAX. (305) 262-6978

COMP-ANL\W03-64SM

SERIES SMI-175 ALUM WINDOW WALL (L.M.I.)

SMI Aluminum Systems, LLC.
11305 N.W. 128 STREET
MEDLEY, FL. 33178
TEL. (305) 888-6288 FAX. (305) 888-6289

revisions:			
no	date	by	description
D	02.15.11		UPDATED FOR 2007 FBC
E	07.19.11		REV. PER BNC COMMENTS

date: 08-11-03
scale: 1/2"=1'-0"
dr. by: HAMID
chk. by:

drawing no.
W03-64

DOOR MULLION LOAD CAPACITY – PSF

NOMINAL DIMS.				WITH REINF.
FRAME HEIGHT INCHES	DOOR HEIGHT INCHES	WIDTH (W1) INCHES	WIDTH (W2) INCHES	EXT. (+) INT. (–)
108	80	60	30	100.0
			33	100.0
			39	100.0
			42	100.0
		72	30	100.0
			33	100.0
			39	100.0
			42	100.0
		84	30	100.0
			33	100.0
			39	100.0
			42	100.0
		96	30	100.0
			33	100.0
			39	100.0
			42	100.0
114	80	60	30	100.0
			33	100.0
			39	100.0
			42	100.0
		72	30	100.0
			33	100.0
			39	100.0
			42	100.0
		84	30	100.0
			33	100.0
			39	100.0
			42	98.7
		96	30	100.0
			33	97.7
			39	92.9
120	80	60	30	100.0
			33	100.0
			39	100.0
			42	100.0
		72	30	100.0
			33	100.0
			39	95.3
			42	92.6
		84	30	94.3
			33	91.7
			39	86.8
			42	84.6
		96	30	86.0
			33	83.8

DOOR MULLION LOAD CAPACITY – PSF

NOMINAL DIMS.				WITH REINF.
FRAME HEIGHT INCHES	DOOR HEIGHT INCHES	WIDTH (W1) INCHES	WIDTH (W2) INCHES	EXT. (+) INT. (–)
108	84	60	30	100.0
			33	100.0
			39	100.0
			42	100.0
		72	30	100.0
			33	100.0
			39	100.0
			42	100.0
		84	30	100.0
			33	100.0
			39	100.0
			42	100.0
		96	30	100.0
			33	100.0
			39	100.0
			42	100.0
114	84	60	30	100.0
			33	100.0
			39	100.0
			42	100.0
		72	30	100.0
			33	100.0
			39	100.0
			42	100.0
		84	30	100.0
			33	100.0
			39	100.0
			42	100.0
		96	30	100.0
			33	100.0
			39	96.0
120	84	60	30	100.0
			33	100.0
			39	100.0
			42	100.0
		72	30	100.0
			33	100.0
			39	96.9
			42	94.1
		84	30	96.2
			33	93.5
			39	88.4
			42	86.0
		96	30	87.8
			33	85.5

DOOR MULLION LOAD CAPACITY – PSF

NOMINAL DIMS.				WITH REINF.
FRAME HEIGHT INCHES	DOOR HEIGHT INCHES	WIDTH (W1) INCHES	WIDTH (W2) INCHES	EXT. (+) INT. (–)
114	96	60	30	100.0
			33	100.0
			39	100.0
			42	100.0
		72	30	100.0
			33	100.0
			39	100.0
			42	100.0
		84	30	100.0
			33	100.0
			39	100.0
			42	100.0
		96	30	100.0
			33	100.0
			39	100.0
120	96	60	30	100.0
			33	100.0
			39	100.0
			42	100.0
		72	30	100.0
			33	100.0
			39	100.0
			42	100.0
		84	30	100.0
			33	100.0
			39	94.8
			42	92.1
		96	30	95.1
			33	92.4

DOOR MULLION LOAD CAPACITY – PSF

NOMINAL DIMS.				WITH REINF.
FRAME HEIGHT INCHES	DOOR HEIGHT INCHES	WIDTH (W1) INCHES	WIDTH (W2) INCHES	EXT. (+) INT. (–)
120	108	60	30	100.0
			33	100.0
			39	100.0
			42	100.0
		72	30	100.0
			33	100.0
			39	100.0
			42	100.0
		84	30	100.0
			33	100.0
			39	100.0
			42	100.0
		96	30	100.0
			33	100.0

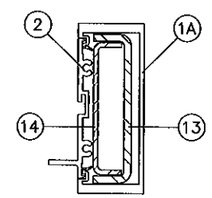

DOOR MULLION
WITH REINFORCING

	Ix IN^4	Sx IN^3
ALUMINUM	5.8937	2.6191
STEEL	2.7398	1.3915
TOTAL Ix ALUM + Ix STL X 2.9	13.8153	

ANCHOR TYPES	TOTAL NO. OF ANCHORS AT DOOR MULLION HEAD
A	–
AA	8
B	6
C	8
CC	8

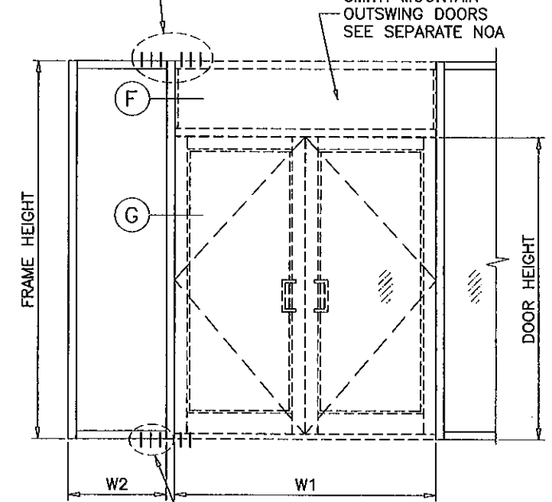

ANCHOR TYPES	TOTAL NO. OF ANCHORS AT DOOR MULLION SILL
A	–
AA	8
B	6
C	8
CC	8

Engr: JAVAD AHMAD
CIVIL
FLA. PE # 70592
C.A.N. 3538

SEP 29 2011

PRODUCT REVISED
as complying with the Florida
Building Code
Acceptance No 11-0412.05
Expiration Date Nov. 21, 2012
By
Miami Dade Product Control

AL-FAROOQ CORPORATION
ENGINEERS & PRODUCT DEVELOPMENT
1235 S.W. 87 AVE
MIAMI, FLORIDA 33174
TEL. (305) 264-8100 FAX. (305) 262-6978
COMP-ANL\W03-64SM

SERIES SMI-175 ALUM WINDOW WALL (L.M.I.)

SMI Aluminum Systems, LLC.
11305 N.W. 128 STREET
MEDLEY, FL. 33178
TEL. (305) 888-6288 FAX. (305) 888-6289

revisions:

no	date	by	description
D	02.15.11		UPDATED FOR 2007 FBC
E	07.19.11		REV. PER BNC COMMENTS

date: 08-11-03
scale: 1/2"=1'-0"
dr. by: HAMID
chk. by:

drawing no.
W03-64

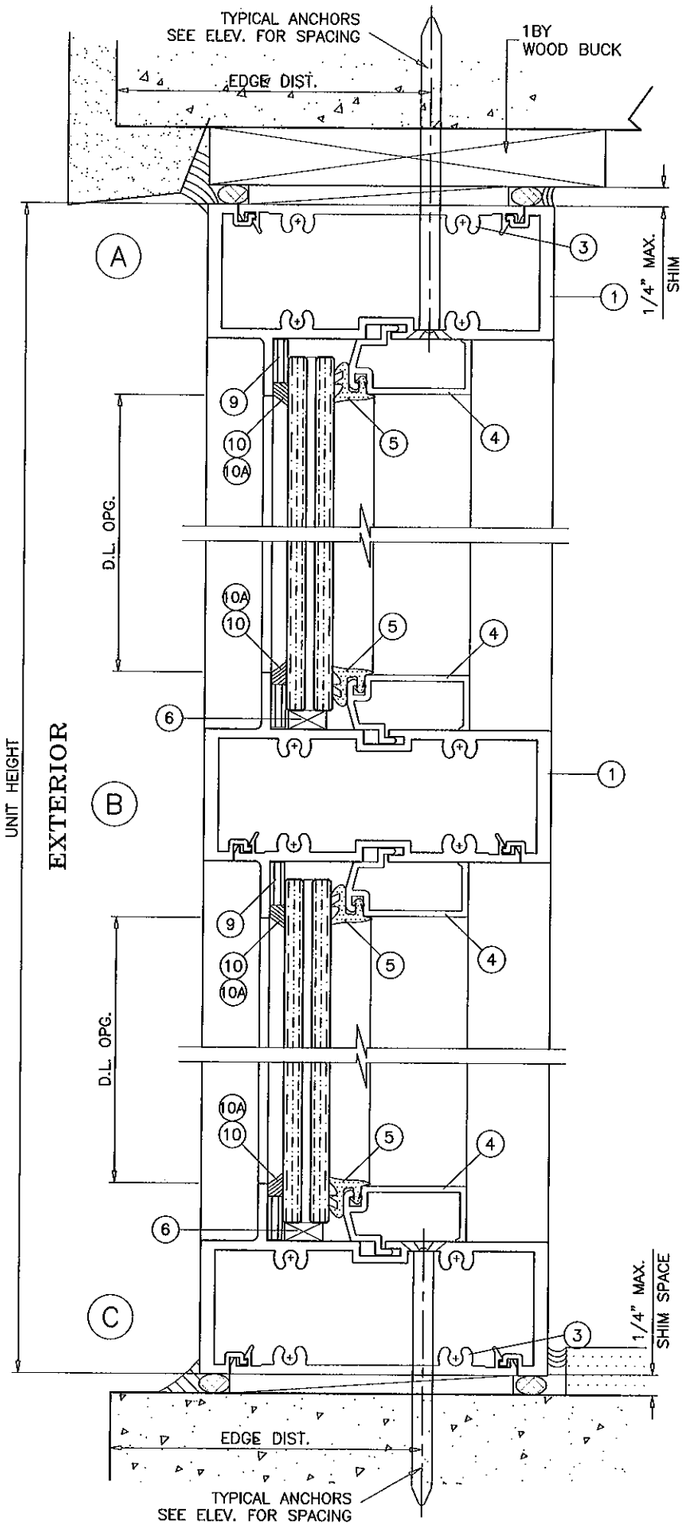

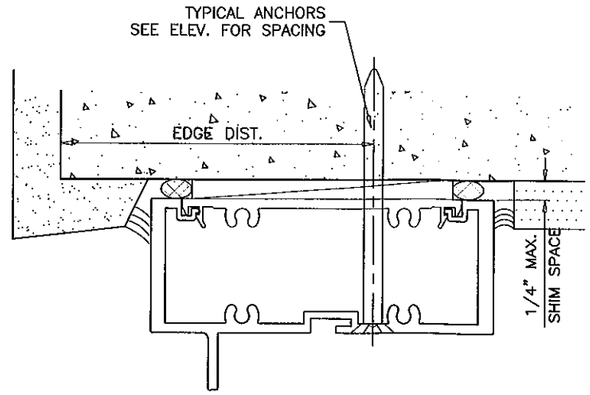

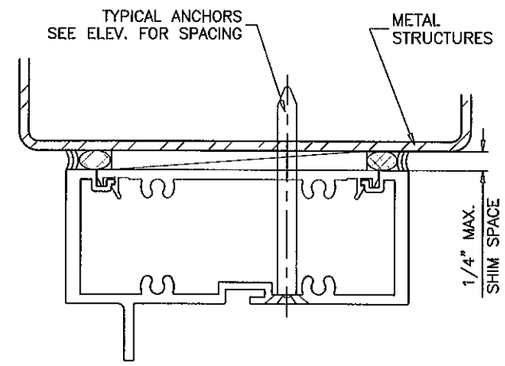

WOOD BUCKS AND METAL STRUCTURES NOT BY SMITH MOUNTAIN MUST SUPPORT LOADS IMPOSED BY GLAZING SYSTEM AND TRANSFER THEM TO THE BUILDING STRUCTURE.

TYPICAL ANCHORS: SEE ELEV. FOR SPACING

TYPE 'A'– 1/4" DIA. ULTRACON BY 'ELCO' (Fu=177 KSI, Fy=155 KSI)
INTO 2BY WOOD BUCKS OR WOOD STRUCTURES
1–3/8" MIN. PENETRATION INTO WOOD

THRU 1BY BUCKS INTO CONC. OR MASONRY
1–1/4" MIN. EMBED INTO CONC. OR MASONRY

TYPE 'AA'– 1/4" DIA. ULTRACON BY 'ELCO' (Fu=177 KSI, Fy=155 KSI)
DIRECTLY INTO CONC. OR MASONRY
1–1/4" MIN. EMBED INTO CONC. OR MASONRY

TYPE 'B'– #14 SMS OR SELF DRILLING SCREWS (GRADE 2 CRS)
INTO METAL STRUCTURES
STEEL : 1/8" THK. MIN. (Fy = 36 KSI MIN.)
ALUMINUM : 1/8" THK. MIN. (6063–T5 MIN.)
(STEEL IN CONTACT WITH ALUMINUM TO BE PLATED OR PAINTED)

TYPE 'C'– 5/16" DIA. ULTRACON BY 'ELCO' (Fu=177 KSI, Fy=155 KSI)
INTO 2BY WOOD BUCKS OR WOOD STRUCTURES
1–3/8" MIN. PENETRATION INTO WOOD

THRU 1BY BUCKS INTO CONC. OR MASONRY
1–1/4" MIN. EMBED INTO CONC. OR MASONRY

TYPE 'CC'– 5/16" DIA. ULTRACON BY 'ELCO' (Fu=177 KSI, Fy=155 KSI)
DIRECTLY INTO CONC. OR MASONRY
1–1/4" MIN. EMBED INTO CONC. OR MASONRY

TYPICAL EDGE DISTANCE
INTO CONCRETE AND MASONRY = 2–1/2" MIN.
INTO WOOD STRUCTURE = 1" MIN.
INTO METAL STRUCTURE = 3/4" MIN.

CONCRETE AT HEAD, SILL OR JAMBS f'c = 3000 PSI MIN.
C–90 HOLLOW/FILLED BLOCK AT JAMBS f'm = 2000 PSI MIN.

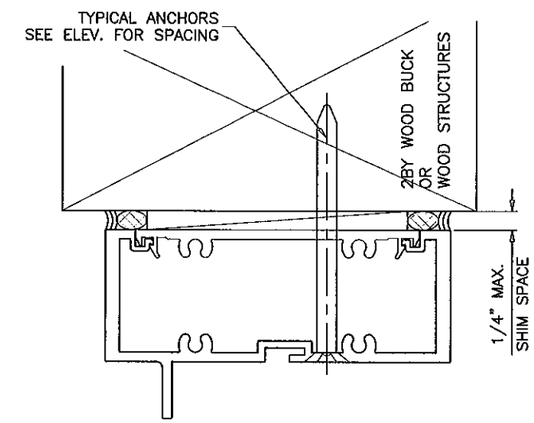

Engr: JAVAD AHMAD
CIVIL
FLA. PE # 70592
C.A.N. 3538
SEP 29 2011

PRODUCT REVISED
as complying with the Florida
Building Code
Acceptance No 11-0412.05
Expiration Date NOV. 21, 2012
By Marcel Perez
Miami Dade Product Control

AL-FAROOQ CORPORATION
ENGINEERS & PRODUCT DEVELOPMENT
1235 S.W. 87 AVE
MIAMI, FLORIDA 33174
TEL. (305) 264-8100 FAX. (305) 262-6978

COMP-ANL\W03-64SM

SERIES SMI-175 ALUM WINDOW WALL (L.M.I.)

SMI Aluminum Systems, LLC.
11305 N.W. 128 STREET
MEDLEY, FL. 33178
TEL. (305) 888-6288 FAX. (305) 888-6289

revisions:

no	date	by	description
A	10.23.03		GLAZING COMPOUND 10A ADDED
B	02.13.04		NO CHANGE THIS SHEET
C	09.26.05		ANCHORS REV.
D	02.15.11		UPDATED FOR 2007 FBC
E	07.19.11		NO CHANGE THIS SHEET

date: 08-11-03
scale: 1/2" = 1"
dr. by: HAMID
chk. by:

drawing no.
W03-64

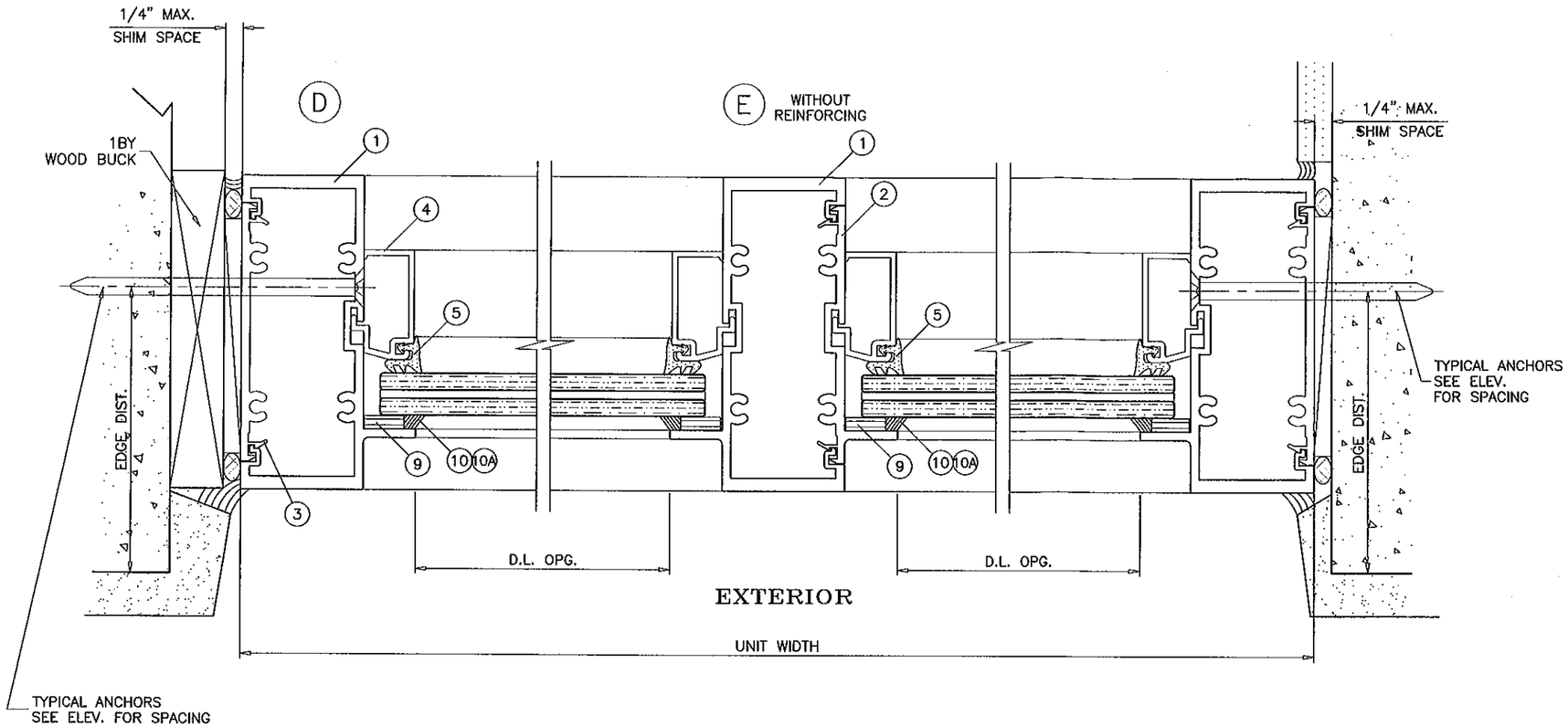

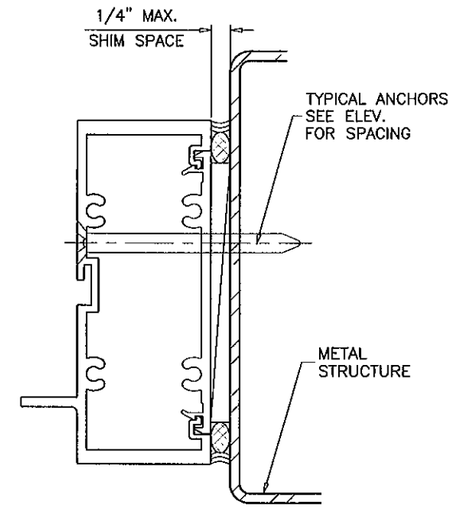

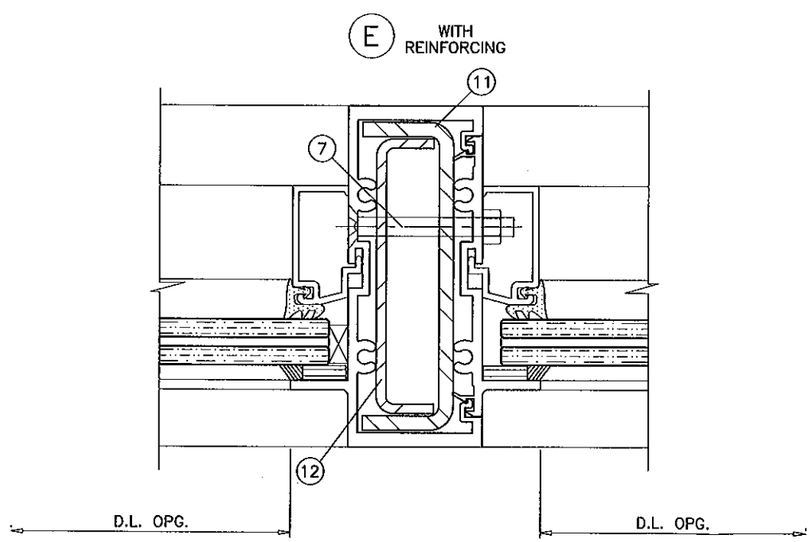

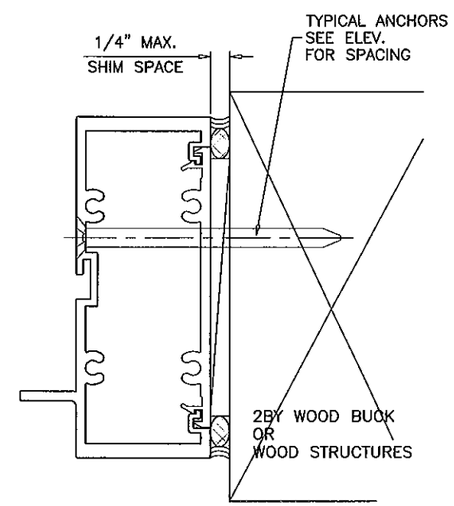

Engr: JAVAD AHMAD
CIVIL
FLA. PE #.70592
C.A.N. 3538

SEP 29 2011

PRODUCT REVISED
as complying with the Florida
Building Code
Acceptance No 11-0412.05
Expiration Date NOV. 21, 2012
By Manuel Perez
Miami Dade Product Control

AL-FAROOQ CORPORATION
ENGINEERS & PRODUCT DEVELOPMENT
1235 S.W. 87 AVE
MIAMI, FLORIDA 33174
TEL. (305) 264-8100 FAX. (305) 262-6978

COMP-ANL\W03-64SM

SERIES SMI-175 ALUM WINDOW WALL (L.M.I.)

SMI Aluminum Systems, LLC.
11305 N.W. 128 STREET
MEDLEY, FL. 33178
TEL. (305) 888-6289 FAX. (305) 888-6288

revisions:

no	date	by	description
A	10.23.03		GLAZING COMPOUND 10A ADDED
B	02.13.04		NO CHANGE THIS SHEET
C	09.26.05		ANCHORS REV.
D	02.15.11		UPDATED FOR 2007 FBC
E	07.19.11		NO CHANGE THIS SHEET

date: 08-11-03
scale: 1/2" = 1"
dr. by: HAMID
chk. by:

drawing no.
W03-64

sheet 8 of 10

SEE SEPARATE NOA FOR DESIGN LOAD CAPACITY OF DOORS AND DOOR ANCHORS.

LOWER VALUES FROM DOORS NOA OR STOREFRONT SYSTEM CAPACITY CHARTS WILL APPLY TO ENTIRE SYSTEM.

F WITHOUT REINFORCING

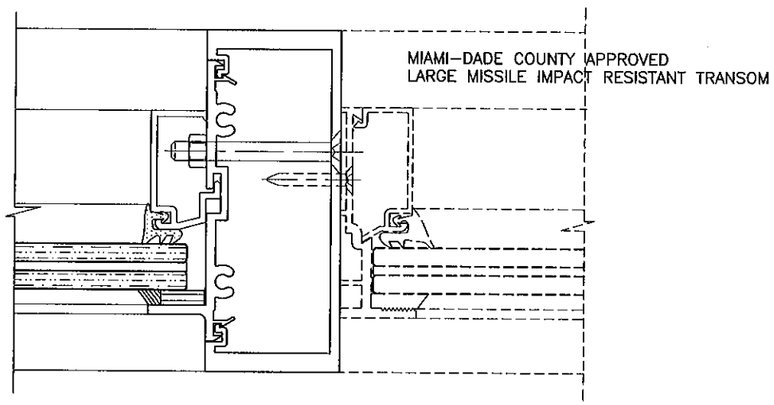

F WITH REINFORCING

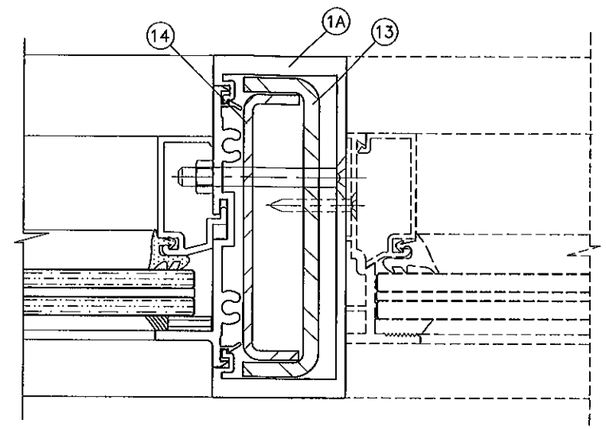

G WITHOUT REINFORCING

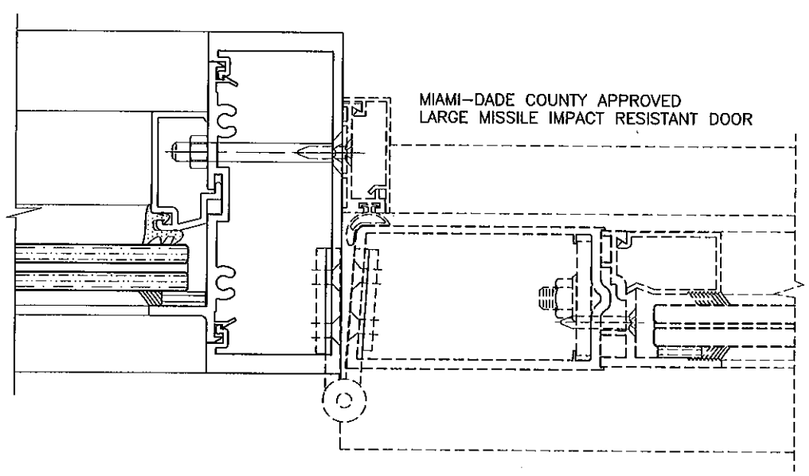

G WITHOUT REINFORCING

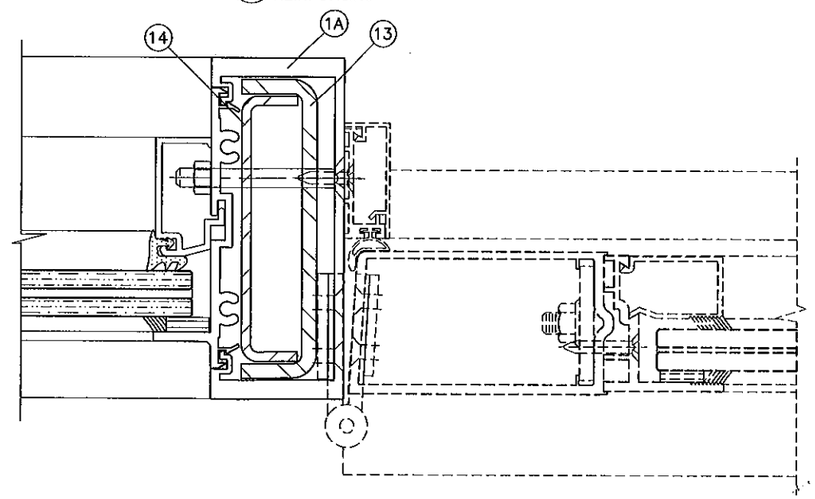

Engr: JAVAD AHMAD
CIVIL
FLA. PE # 70592
C.A.N. 3538

SEP 29 2011

PRODUCT REVISED
as complying with the Florida
Building Code
Acceptance No 11-0412.05
Expiration Date NOV. 21, 2012
By Manuel Perez
Miami Dade Product Control

AL-FAROOQ CORPORATION
ENGINEERS & PRODUCT DEVELOPMENT
1235 S.W. 87 AVE
MIAMI, FLORIDA 33174
TEL. (305) 264-8100 FAX. (305) 262-6978
COMP-ANL\W03-64SM

SERIES SMI-175 ALUM WINDOW WALL (L.M.I.)

SMI Aluminum Systems, LLC.
11305 N.W. 128 STREET
MEDLEY, FL. 33178
TEL. (305) 888-6288 FAX. (305) 888-6289

revisions:

no	date	by	description
D	02.15.11		UPDATED FOR 2007 FBC
E	07.19.11		NO CHANGE THIS SHEET

date: 08-11-03
scale: 1/2" = 1"
dr. by: HAMID
chk. by:

drawing no.
W03-64

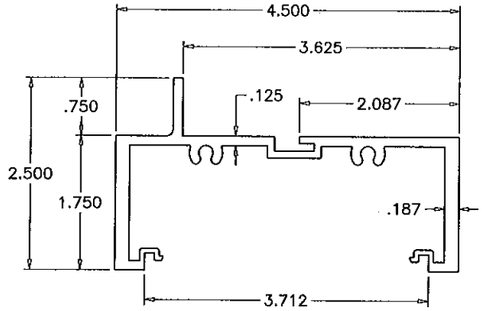

(1) FRAME HEAD/SILL/JAMB/MULLION

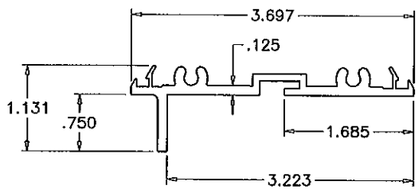

(2) INTERMEDIATE SNAP-IN

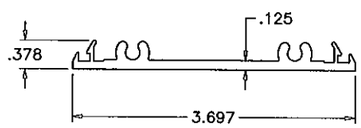

(3) POCKET FILLER

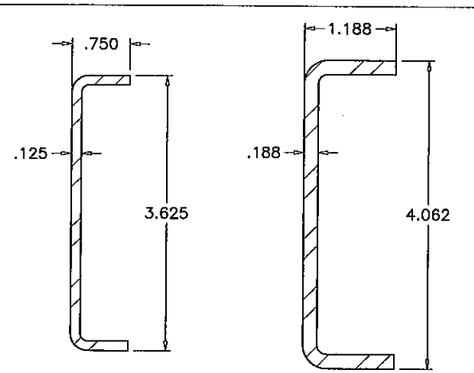

(12) (11) REINFORCING CHANNELS STOREFRONT MULLION

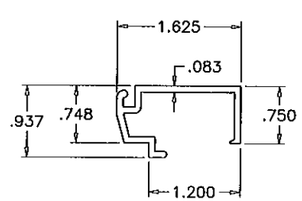

(4) GLAZING STOP

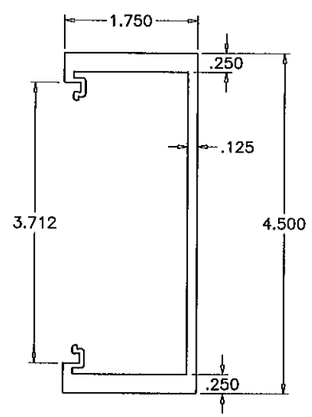

(1A) DOOR MULLION

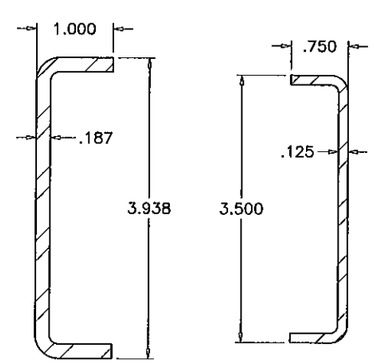

(13) (14) REINFORCING CHANNELS DOOR MULLION

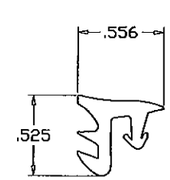

(5) WEDGE-IN GASKET
SCALE 1:1

ITEM #	PART #	QUANTITY	DESCRIPTION	MATERIAL	MANF./SUPPLIER/REMARKS
1	SMI-001	AS REQD.	FRAME HEAD/SILL/JAMB/MULLION	6063-T6	SMITH MOUNTAIN
1A	SMI-005	AS REQD.	DOOR MULLION	6063-T6	SMITH MOUNTAIN
2	SMI-003	AS REQD.	INTERMEDIATE SNAP-IN	6063-T6	SMITH MOUNTAIN
3	SMI-004	AS REQD.	FLAT FILLER, 4" LONG AT ANCHOR LOCATIONS	6063-T6	SMITH MOUNTAIN
4	SMI-002	AS REQD.	GLASS STOP	6063-T5	SMITH MOUNTAIN
5	SMI-G01	AS REQD.	GLAZING GASKET	EPDM 70 ±5	GLAZING RUBBER PRODUCTS
6	SMI-G03	AS REQD.	SETTING BLOCK (1/4" X 1/2" X 2" LONG)	EPDM 70 ±5	FRANK LOWE
7	1/4-20 X 2-1/4"	AS REQD.	MULLION SCREWS WITH NUT & WASHER	–	AT 9" FROM ENDS & 24" O.C.
8	#12 X 1-1/2"	2 PER CORNER	FRAME ASSEMBLY SCREWS	–	HEX H SELF DRILLING
9	SMI-G02	–	ADHESIVE FOAM TAPE (1/4" X 1/2")	–	FRANK LOWE/BUTNICK
10	995	–	GLAZING COMPOUND	–	DOW CORNING
10A	895/896	–	GLAZING COMPOUND	–	PECORA
11	–	–	REINFORCING CHANNEL (STOREFRONT MULLION)	STEEL	1-3/16" X 4-1/16" X 1--3/16" X 3/16" THK. (ASTM A36, Fy 36 KSI)
12	–	–	REINFORCING CHANNEL (STOREFRONT MULLION)	STEEL	3/4" X 3-5/8" X 3/4" X 1/8" THK. (ASTM A36, Fy 36 KSI)
13	–	–	REINFORCING CHANNEL (DOOR MULLION)	STEEL	1" X 3-15/16" X 1" X 3/16" THK. (ASTM A36, Fy 36 KSI)
14	–	–	REINFORCING CHANNEL (DOOR MULLION)	STEEL	3/4" X 3-1/2" X 3/4" X 1/8" THK. (ASTM A36, Fy 36 KSI)

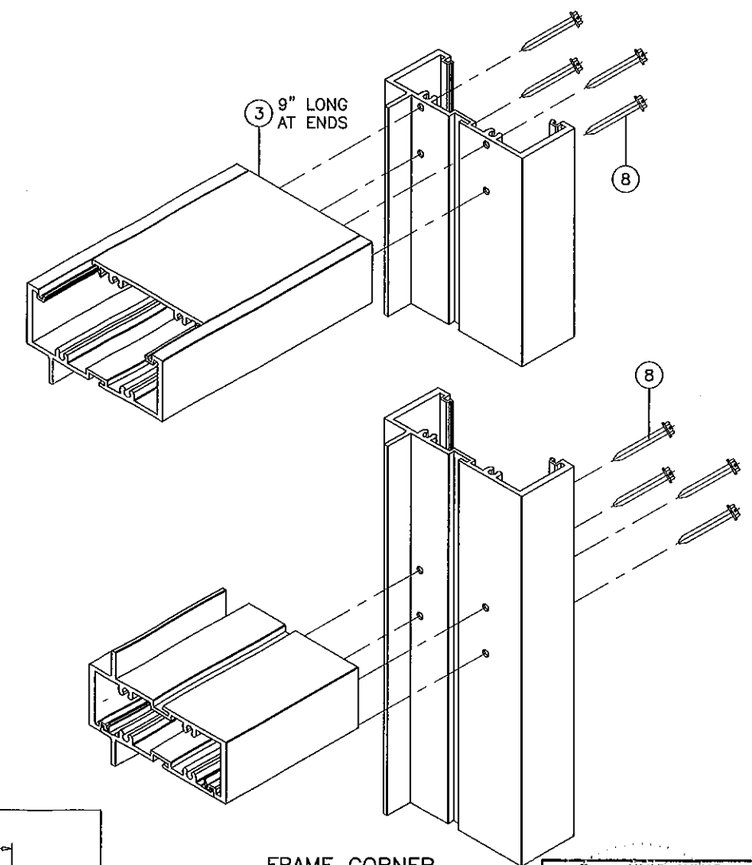

FRAME CORNER

Engr: JAVAD AHMAD
CIVIL
FLA. PE #, 70592
C.A.N. 3538

SEP 29 2011

PRODUCT REVISED
as complying with the Florida
Building Code
Acceptance No 11-0412.05
Expiration Date Nov. 21, 2012
By
Miami Dade Product Control

AL-FAROOQ CORPORATION
ENGINEERS & PRODUCT DEVELOPMENT
1235 S.W. 87 AVE
MIAMI, FLORIDA 33174
TEL. (305) 264-8100 FAX. (305) 262-6978

COMP-ANL\W03-64SM

SERIES SMI-175 ALUM WINDOW WALL (L.M.I.)

SMI Aluminum Systems, LLC.
11305 N.W. 128 STREET
MEDLEY, FL. 33178
TEL. (305) 888-6288 FAX. (305) 888-6289

revisions:

no	date	by	description
A	10.23.03		GLAZING COMPOUND 10A ADDED
B	02.13.04		NO CHANGE THIS SHEET
C	09.26.05		FRAME ALLOY REV.
D	02.15.11		UPDATED FOR 2007 FBC
E	07.19.11		NO CHANGE THIS SHEET

date: 08-11-03
scale: 1/2" = 1"
dr. by: HAMID
chk. by:

drawing no.
W03-64

sheet 10 of 10