MIAMI-DADE COUNTY
BUILDING AND NEIGHBORHOOD COMPLIANCE DEPARTMENT (BNC)
BOARD AND CODE ADMINISTRATION DIVISION

MIAMI–DADE COUNTY, FLORIDA
PRODUCT CONTROL SECTION
11805 SW 26th Street, Room 208
Miami, Florida 33175–2474
T (786) 315–2590 F (786) 315–2599
www.miamidade.gov/building

NOTICE OF ACCEPTANCE (NOA)

Novum Structures, LLC.
W126 N8585 Westbrook Crossing
Menomonee Falls, WI 53051

SCOPE:

This NOA is being issued under the applicable rules and regulations governing the use of construction materials. The documentation submitted has been reviewed and accepted by Miami–Dade County BNC–Product Control Section to be used in Miami–Dade County and other areas where allowed by the Authority Having Jurisdiction (AHJ).

This NOA shall not be valid after the expiration date stated below. The Miami–Dade County Product Control Section (In Miami–Dade County) and/or the AHJ (in areas other than Miami–Dade County) reserve the right to have this product or material tested for quality assurance purposes. If this product or material fails to perform in the accepted manner, the manufacturer will incur the expense of such testing and the AHJ may immediately revoke, modify, or suspend the use of such product or material within their jurisdiction. BNC reserves the right to revoke this acceptance, if it is determined by Miami–Dade County Product Control Section that this product or material fails to meet the requirements of the applicable building code.

This product is approved as described herein, and has been designed to comply with the Florida Building Code, including the High Velocity Hurricane Zone.

DESCRIPTION:

Series "HG01 Vertical PSG" Multiple Point Supported Glass Wall System – L.M.I.

APPROVAL DOCUMENT: Drawing No. **25–183**, titled "Novum's Point Supported Glass System: HG01 Vertical Wall System", sheets 1 through 22 of 22, dated 03/10/2010 with the latest revision dated 08/25/2011, prepared by Larson Engineering, Inc., signed and sealed by Ethan A. Charpentier, P. E., bearing the Miami–Dade County Product Control Approval stamp with the Notice of Acceptance number and Approval date by the Miami–Dade County Product Control Section.

MISSILE IMPACT RATING: Large and Small Missile Impact Resistant.

LABELING: Each unit shall bear a permanent label with the manufacturer's name or logo, Veitshoechheim, Germany, model/ series and following statement: "Miami–Dade County Product Control Approved" unless otherwise noted herein.

RENEWAL of this NOA shall be considered after a renewal application has been filed and there has been no change in the applicable building code negatively affecting the performance of this product.

TERMINATION of this NOA will occur after the expiration date or if there has been a revision or change in the materials, use, and/or manufacture of the product or process. Misuse of this NOA as an endorsement of any product, for sales, advertising or any other purposes shall automatically terminate this NOA. Failure to comply with any section of this NOA shall be cause for termination and removal of NOA.

ADVERTISEMENT: The NOA number preceded by the words Miami–Dade County, Florida, and followed by the expiration date may be displayed in advertising literature. If any portion of the NOA is displayed, then it shall be done in its entirety.

INSPECTION: A copy of this entire NOA shall be provided to the user by the manufacturer or its distributors and shall be available for inspection at the job site at the request of the Building Official.

This NOA consists of this page 1, evidence pages E–1 and E–2, as well as approval document mentioned above.

The submitted documentation was reviewed by **Jaime D. Gascon, P. E.**

MIAMI-DADE COUNTY APPROVED

J. Gascon. 8/26/11

NOTICE OF ACCEPTANCE: EVIDENCE SUBMITTED

A. DRAWINGS

1. Manufacturer's die drawings and sections.
2. Drawing No. **25–183**, titled "Novum's Point Supported Glass System: HG01 Vertical Wall System", sheets 1 through 22 of 22, dated 03/10/2010 with the latest revision dated 08/25/2011, prepared by Larson Engineering, Inc., signed and sealed by Ethan A. Charpentier, P. E.

B. TESTS

1. Test reports on: 1) Air Infiltration Test, per FBC, TAS 202–94
   2) Uniform Static Air Pressure Test, Loading per FBC TAS 202–94
   3) Water Resistance Test, per FBC, TAS 202–94
   4) Large Missile Impact Test per FBC, TAS 201–94
   5) Cyclic Wind Pressure Loading per FBC, TAS 203–94

   along with marked–up drawings and installation diagram of multiple point supported system, prepared by Fenestration Testing Laboratory, Inc., Test Report No. **FTL–6321**, dated 01/13/2011, revised, reissued, signed, sealed and dated 08/01/2011 by Marlin D. Brinson, P. E.
2. Test reports on: 1) Air Infiltration Test, per FBC, TAS 202–94
   2) Uniform Static Air Pressure Test, Loading per FBC TAS 202–94
   3) Water Resistance Test, per FBC, TAS 202–94
   4) Large Missile Impact Test per FBC, TAS 201–94
   5) Cyclic Wind Pressure Loading per FBC, TAS 203–94

   along with marked–up drawings and installation diagram of multiple point supported system, prepared by Fenestration Testing Laboratory, Inc., Test Report No. **FTL–6323**, dated 05/23/2011, revised, reissued, signed, sealed and dated 08/01/2011 by Marlin D. Brinson, P. E.

6) Test reports on: 1) Air Infiltration Test, per FBC, TAS 202–94
   2) Uniform Static Air Pressure Test, Loading per FBC TAS 202–94
   3) Water Resistance Test, per FBC, TAS 202–94

   along with marked–up drawings and installation diagram of multiple point supported system, prepared by Architectural Testing, Inc., Test Report No. **ATI–49758.01–120–18**, dated 07/02/2004, signed and sealed by Joseph A. Reed, P. E.

C. CALCULATIONS

1. Anchor calculations and structural analysis, complying with FBC–2007, prepared by Larson Engineering, Inc., dated 10/20/10, revised, signed, sealed and dated 08/01/2011 by Ethan A. Charpentier, P. E.
   Complies with ASTM E1300–04

Jaime D. Gascon, P. E.
Product Control Section Supervisor
NOA No. 11–0412.06
Expiration Date: August 25, 2016
Approval Date: August 25, 2011

NOTICE OF ACCEPTANCE: EVIDENCE SUBMITTED

D. QUALITY ASSURANCE

1. Miami–Dade Building and Neighborhood Compliance Department (BNC).

E. MATERIAL CERTIFICATIONS

1. Notice of Acceptance No. **10–0413.04** issued to E.I. DuPont DeNemours & Co., Inc. for their "**DuPont Sentry Glass® Interlayer**" dated 05/26/2010, expiring on 01/14/12.

F. STATEMENTS

1. Statement letter of conformance and compliance with the FBC–2007, dated 10/20/2010, signed and sealed by Ethan A. Charpentier, P. E.
2. Statement letter of independence and no financial interest, dated 10/23/2010, signed and sealed by Ethan A. Charpentier, P. E.
3. Laboratory compliance letter for Test Report No. **FTL–6321**, issued by Fenestration Testing Laboratory, Inc., dated 01/13/2011, revised, signed, sealed and dated 08/01/2011 by Marlin D. Brinson, P. E.
4. Laboratory compliance letter for Test Report No. **FTL–6323**, issued by Fenestration Testing Laboratory, Inc., dated 05/23/2011, revised, signed, sealed and dated 08/01/2011 by Marlin D. Brinson, P. E.
5. Laboratory compliance letter for Test Report No. **ATI–49758.01–120–18**, issued by Architectural Testing, Inc., dated 07/02/2004, signed and sealed by Joseph A. Reed, P. E.
6. Evaluation Report of the Architectural Testing, Inc. Test Report No. **ATI–49758.01–120–18** dated 12/20/2004, signed and sealed by Keshwar P. Ramdular, P. E.
7. Tensile Test prepared by Stork Technimet, Inc., Test Report No. **STI–0404–09609**, dated 05/11/2004, signed by Anna Mayhew–Rozek.
8. Countersunk borehole stress analysis and Test Report No. **FWI–N–031–09** prepared by Feldmann & Weynand, G.m.b.H., dated 02/27/2009, signed by Martin Baitinger.
9. Proposal No. **10–11332** issued by Product Control, dated 03/11/2011, signed by Jaime D. Gascon, P. E.

G. OTHERS

1. None.

Jaime D. Gascon, P. E.
Product Control Section Supervisor
NOA No. 11–0412.06
Expiration Date: August 25, 2016
Approval Date: August 25, 2011

NOVUM'S POINT SUPPORTED GLASS SYSTEM: HG01 VERTICAL WALL SYSTEM

System Description

The Novum Hurricane PSG vertical system that has been tested for Miami - Dade NOA consists simply of glass, rotules, and silicone joints. A perimeter channel is also a tested part of the system.

The glass is fully tempered and laminated. Both pieces of glass are 0.375" thick. The laminate is 0.090" DuPont Sentry Glass Interlayer by E.I. DuPont DeNemours & Co., Inc. per NOA No. 10-0413.04 Therefore the overall thickness is 0.84".

The RB22-16 rotules are ss fixtures that consist of a rotating head and 16 mm diameter threaded rod that allow it to be mounted through a hole in the glass and in turn fastened to a support structure using the threaded rod. The silicone joints consist of an extruded silicone profile pushed into the 0.75" (20 mm) wide space between adjoining glass panels from the inside and act s as a backer. This profile fills about 60% of the depth of the joint. The outer 40% of the space is filled with Dow Corning 795 silicone sealant which produces the weather tight seal.

The steel glazing arms and support HSS framework used in the test is not part of the "system". On future projects using HG01, the glazing arms and steel support framework will be designed using conventional analysis methods and appropriate material design and building codes. It will not be subject to NOA testing or approval.

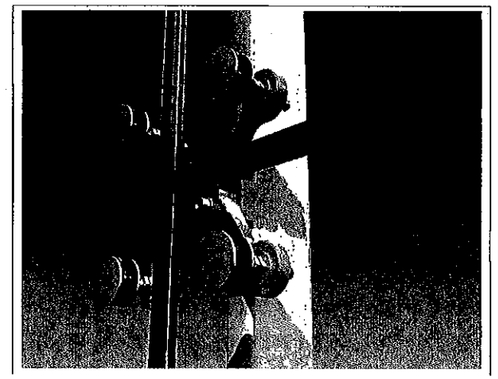

Limitations For Use

1) Maximum imposed design load of 133 psf when system is used as a curtain wall/storefront. (< 15° from vertical). This is based on a factor of safety of 1.5 against breakage at 200 psf.

   Dead load of glass is not considered part of an imposed load (i.e.; glass can allowably handle 133 psf normal to its surface plus the weight of the glass).

2) Maximum panel side length:
   a) Square = 80" or 6'-8"
   b) Rectangle = 80" or 6'-8"
   c) Trapezoid = 80" or 6'-8"
   d) Triangle = 80" or 6'-8"

3) Maximum span between adjacent rotules as defined in diagram below = 68" or 5'-8".

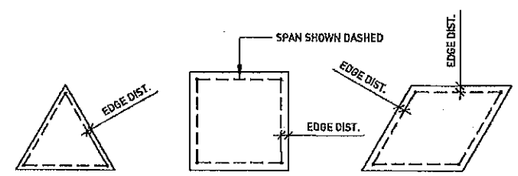

4) Edge distance from center of rotule to nearest glass edge must be between 3.5" and 6".

5) Trapezoids must have a minimum interior angle of 60° or greater. Triangles have no angular requirements.

6) All rectangles, triangles and trapezoids meeting the above limitations are acceptable. Below are examples of other possibilities. Many other possibilities are not shown.

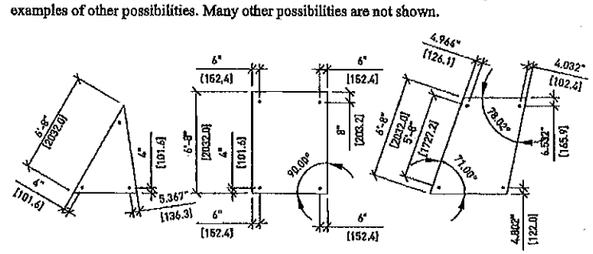

7) A continuous edge channel may be used for support along one edge of any square or rectangle panel with rotules at the remaining 2 corners.

8) Large missile testing has been done and therefore the system may be used for enclosures and there is no restriction as to what elevation from the ground.

9) The Novum Hurricane PSG system that pertaining to this NOA consists simply of the glass, rotules, and silicone joints. A perimeter channel is also a tested part of the system.

10) The steel support arms and any support framework is not part of the "system". On future projects using HG01, the support arms and steel support framework will be designed using conventional analysis methods and appropriate material design and building codes. It will not be subject to NOA testing or approval.

Support framing must not deflect more than L/160.

INDEX OF DRAWINGS

	SHEET NO.	DESCRIPTION
MOCK-UP SAMPLE #1 & #2	MU100	GENERAL NOTES
	MU100A	PART: ROTULE INFORMATION
	MU100B	PART: GASKET DETAIL: NON-CHAMFERED GLASS JOINT
	MU100C	PART: GASKET DETAIL: CHAMFERED GLASS JOINT
MOCK-UP SAMPLE #1 ONLY	MU200	MOCK-UP: MAIN PLAN AND ELEVATION VIEWS
	MU500	MOCK-UP: SECTION & DETAIL VIEWS
	MU501	MOCK-UP: SECTION & DETAIL VIEWS
	MU502	MOCK-UP: GLASS JOINT DETAIL VIEWS
	MU700	MOCK-UP: GLASS LAYOUT & DIMENSIONS
MOCK-UP SAMPLE #2 ONLY	MU210	MOCK-UP: MAIN PLAN AND ELEVATION VIEWS
	MU510	MOCK-UP: SECTION & DETAIL VIEWS
	MU511	MOCK-UP: SECTION & DETAIL VIEWS
	MU512	MOCK-UP: SECTION & DETAIL VIEWS
	MU513	DRAWING ELIMINATED FROM SET
	MU514	MOCK-UP: GLASS JOINT DETAIL VIEWS
	MU515	MOCK-UP: SECTION & DETAIL VIEWS
	MU516	MOCK-UP: SECTION & DETAIL VIEWS
	MU710	MOCK-UP: GLASS LAYOUT & DIMENSIONS
GLASS DWGS. & DETAILS	MU800	GLASS MAKE- UP SHEET (NON ART GLASS)
	MU801	GLASS MAKE- UP SHEET (ART GLASS)
	MU802	GLASS FABRICATION DRAWING (NON ART GLASS)
	MU803	GLASS FABRICATION DRAWING (ART GLASS)
	MU804	BILL OF MATERIALS

DESIGN PARAMETERS

FLORIDA BUILDING CODE 2007

TEST REPORTS FROM FENESTRATION TESTING LABORATORY, INC.:
1) FLAT MOCK-UP: REPORT DATE = 1/13/2010
2) ZIG ZAG MOCK-UP: REPORT DATE = 5/23/2011

-DESIGN PRESSURE: +133 PSF
-DESIGN SUCTION: -133 PSF

TAS-201 - IMPACT TEST PROCEDURES
TAS-202 - AIR LEAKAGE, WATER PENETRATION & STRUCTURAL PERFORMANCE TEST PROCEDURES
TAS-203 - CYCLING TEST PROCEDURES

ASTM STANDARDS
E283 - AIR INFILTRATION TEST PROCEDURE
E330 - STRUCTURAL PERFORMANCE TEST PROCEDURES
E331 - WATER PENETRATION; STATIC & DYNAMIC, TEST PROCEDURES
E1886 - MISSILE IMPACT & CYCLIC PRESSURE TESTING - LEVEL A & LEVEL D, TEST PROCEDURE
E1996 - HURRICANE DEBRIS IMPACT TESTING PROCEDURES

GLASS MAKE-UP #1
3/8", FULLY TEMPERED, CLEAR
0.090" 1-PLY CLEAR DuPont SentryGlas Interlayer by E.I. DuPont DeNemours & Co., Inc. per NOA No. 10-0413.04
3/8", FULLY TEMPERED, CLEAR

GLASS MAKE-UP #2
3/8", FULLY TEMPERED, CLEAR
0.090" 1-PLY CLEAR DuPont SentryGlas Interlayer by E.I. DuPont DeNemours & Co., Inc. per NOA No. 10-0413.04
3/8", FULLY TEMPERED, CLEAR
0.060" 1-PLY CLEAR DuPont SentryGlas Interlayer by E.I. DuPont DeNemours & Co., Inc. per NOA No. 10-0413.04
1/2", FULLY TEMPERED, CLEAR

STAINLESS STEEL
ROTULE: 316SS

SEALANTS
FRAME ASSEMBLY SEALS- MEDIUM CONSTRUCTION SILICONE SEALANT- IE: DOW CORNING #795
EXPOSED WEATHER SEALS- MEDIUM MODULUS CONSTRUCTION SILICONE SEALANT- IE: DOW CORNING #795
SILICONE COLOR- BLACK (OR OTHER DOW CORNING STANDARD COLORS)

SYMBOLS

DETAIL NUMBER
SHEET NUMBER WHERE REFERENCED
SHEET NUMBER WHERE DRAWN

C600.X — FIELD HARDWARE MARK

ABBREVIATIONS

NS = NEAR SIDE
FS = FAR SIDE
MK. = MARK NUMBER
TYP. = TYPICAL
SIM. = SIMILAR
OPP. = OPPOSITE HAND
SYM. = SYMETRICAL
U.N.O. = UNLESS NOTED OTHERWISE
C.L. = CENTER LINE
RHS = RIGHT HAND SIDE
LHS = LEFT HAND SIDE

ETHAN A. CHARPENTIER
LICENSE
No. 65106
STATE OF FLORIDA
PROFESSIONAL ENGINEER

AUG 2 5 2011

Approved as complying with the Florida Building Code
Date 08/25/2011
NOA# 11-0412.06
Miami Dade Product Control
By

ALL RIGHTS RESERVED. THIS DRAWING OR ANY PART THEREOF MUST NOT BE REPRODUCED WITHOUT PERMISSION OF NOVUM STRUCTURES LLC.

Larson Engineering, Inc.
3301 Lakeo Road
Wake Rose Lake, WI 55119
(P) 651.481.9120 (F) 651.481.9101

Florida firm No. F-02000063178
Certificate of Authorization #3803
Ethan A. Charpentier
Registration No. 65106
ENGINEER STAMP:

APPROVAL STAMP:

NOVUM STAMP:

REV.NO.	DATE	DWG.BY	CHK.BY
1	22JUL11	BTH	SWK

REVISED PER COMMENTS BY BCCO

Novum Structures LLC
W126 N8585 Westbrook Crossing
Menomonee Falls, WI 53051 USA
T 262.255.5561
www.novumstructures.com
info@novumstructures.com

NOVUM

PROJECT: NOVUM'S HURRICANE PSG GLASS SYSTEM: HG01 VERTICAL WALL SYSTEM

DRAWING DESCRIPTION: MOCK-UP #1 & #2 COVER SHEET

DRAWN BY: BTH	DATE: 04MAR10
CHECKED BY: SWK	APPROVED BY: SWK
SCALE: NONE	PROJECT MANAGER: GB

PROJECT NUMBER: 25-183

SHEET NUMBER: MU100-1

FILE PATH: P:\PROJECTS\2005\25-183 MIC FARLINGTON HEIGHTS CONNECTOR\2103 DRAWINGS\AUTOCAD DWGS\NOA\MU100.DWG

24Aug2011 12:10 PM

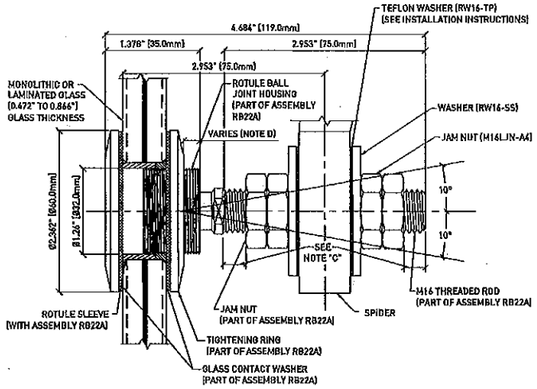

RB22-16 BUTTONHEAD ROTULE UNIT

NOTES:
A) DIMENSIONS IN BRACKETS ARE IN MM, WHICH ARE THE CONTROLLING DIMENSIONS.
B) SEE PART DRAWINGS FOR TOLERANCES.
C) EXPOSED THREAD DISTANCE IS TO BE NEARLY EQUAL ON BOTH SIDES OF SPIDER.
D) MAX 18.0mm (12mm GLASS) MIN 0.0mm (22mm GLASS)

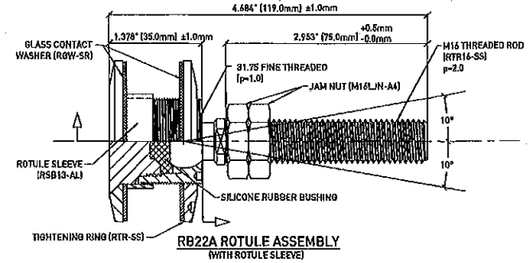

RB22A ROTULE ASSEMBLY
(WITH ROTULE SLEEVE)

ASSEMBLY NOTES:
1) RTR-SS IS TO BE PLACED NEAR THE BOTTOM OF THE HEAD, AS SHOWN.
2) JAM NUTS ARE TO BE PLACED NEAR THE TOP OF THE ROD, AS SHOWN.

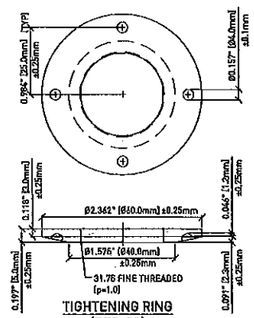

TIGHTENING RING
(RTR-SS)

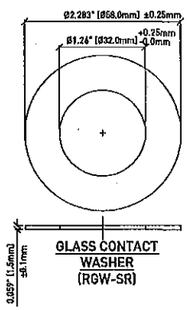

GLASS CONTACT WASHER
(RGW-SR)

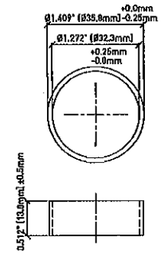

NOTE: USE SLEEVE RSB9-AL (0.354" (9mm) LONG) WHEN WORKING WITH 12mm-14mm GLASS. PART IS PROVIDED SEPARATELY FROM THE ASSEMBLY.

ROTULE SLEEVE
BUTTONHEAD (RSB13-AL)

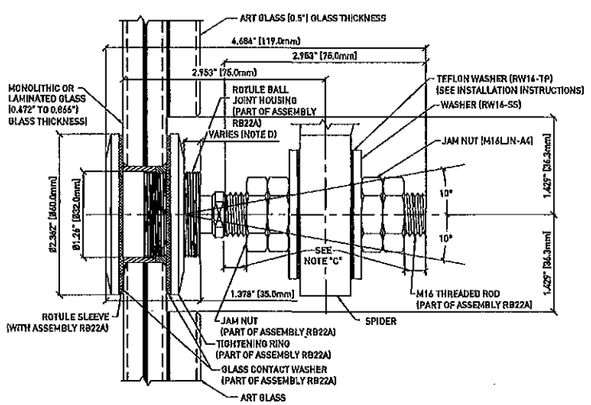

RB22-16 BUTTONHEAD ROTULE UNIT
WITH "ART GLASS"

PACKAGING DIAGRAM
NOT TO SCALE

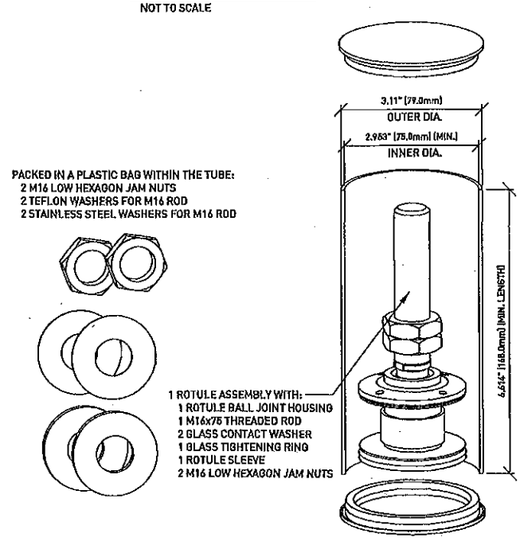

GLASS INSTALLER NOTE:

EACH PANEL OF GLASS IS DESIGNED TO BE ABLE TO MOVE AS SHOWN BELOW. ON THE ROTULES, THE INNER JAM NUTS SHOULD ONLY BE HAND TIGHTENED AGAINST THE WASHERS (U.N.O.) TO MAKE SURE THE INNER JAM NUTS WILL NOT BACK OFF, FULLY TIGHTEN OUTER NUTS AGAINST THEM. THIS WILL ALLOW THE ROD TO MOVE AS DESIGNED.

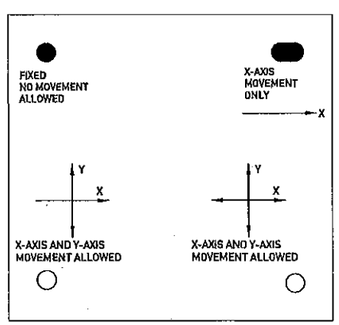

VIEW OF ONE GLASS PANE
FROM OUTSIDE/ABOVE LOOKING IN

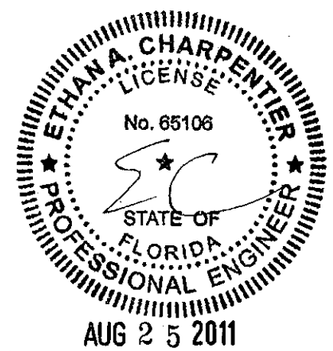

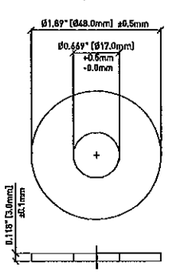

STAINLESS STEEL WASHER
(RW16-SS)

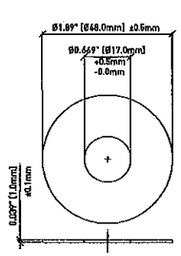

TEFLON WASHER
(RW16-TP)

PSG M16 BUTTONHEAD ROTULE (RB22-16) INSTALLATION NOTES

INSPECTION OF THE ROTULE ON SITE:
BEFORE THE ROTULE UNITS (RB22-16) ARE INSTALLED INTO THE GLASS PANELS, EACH INDIVIDUAL ROTULE ASSEMBLY AND ITS COMPONENTS MUST BE INSPECTED FOR SCRATCHES, UNIMPEDED MOVEMENT, DAMAGE TO THE THREAD OR TO THE WELDING SEAM, DAMAGE TO THE WASHERS AND THE PERIMETER EDGES OF THE RINGS, OR ANY OTHER DEFECT. DO NOT USE DAMAGED ROTULES.

THE SIZE OF ALL GLASS HOLES MUST BE CHECKED. PLACE A ROTULE SLEEVE INTO EACH HOLE (UNLESS INSTALLED BY GLASS MANUFACTURER) AND REMOVE ANY EXCESS INTERLAYER THAT MAY BE IMPEDING A PROPER FIT.

ONCE INSPECTED, THOROUGHLY CLEAN EACH PART OF THE ROTULE.

1) REMOVE THE TIGHTENING RING (RTR-SS), BOTH GLASS CONTACT WASHERS (RGW-SR), AND THE ROTULE SLEEVE (RSB13-AL) FROM THE ROTULE ASSEMBLY.

2) LAY A SMALL BEAD OF CLEAR SILICONE AROUND THE OUTER GLASS LITE (SMALLER HOLE). INSTALL THE ROTULE SLEEVE IN THE GLASS HOLE, ENSURING THAT THE OUTER EDGE IS FLUSH WITH THE EXTERIOR FACE OF GLASS.

NOTE: FOR 0.472"-0.551" GLASS, USE A 0.354" LONG SLEEVE (RSB9-AL) INSTEAD OF THE 0.512" LONG SLEEVE (RSB13-AL) THAT IS PART OF THE ASSEMBLY. DISCARD THE RSB13-AL U.N.O.

3) PLACE A BEAD OF CLEAR SILICONE ON THE UNDERSIDE OF THE BUTTONHEAD CAP AROUND THE EDGE OF THE BALL JOINT HOUSING. PUT ONE GLASS CONTACT WASHER AGAINST THE UNDERSIDE OF THE BUTTONHEAD CAP. PLACE ANOTHER BEAD OF CLEAR SILICONE ON THE UNDERSIDE OF THE GLASS CONTACT WASHER AROUND THE EDGE OF THE BALL JOINT HOUSING. INSERT THE ROTULE INTO THE GLASS.

4) ON THE OPPOSITE SIDE OF THE GLASS, FILL IN THE VOID BETWEEN THE GLASS AND THE ROTULE HOUSING WITH CLEAR SILICONE, COMING UP JUST ABOVE FLUSH.

5) PLACE THE SECOND GLASS CONTACT WASHER THROUGH THE ROD AGAINST THE GLASS AND TWIST THE TIGHTENING RING AGAINST THE WASHER SNUG TIGHT. CLEAN OFF ANY EXCESS SILICONE ON EITHER SIDE OF THE GLASS. LIFT THE GLASS PANEL, CENTERING THE THREADED RODS OVER THE SPIDER HOLES. PLACE ONE STAINLESS STEEL WASHER (RW16-SS) AND ONE TEFLON WASHER (RW16-TP) ON EACH ROD, THEN SLIDE THE RODS THROUGH THE SPIDER HOLES. (OMIT THE TEFLON WASHER AT ALL FIXED-HOLE CONNECTIONS.)

6) POSITION THE GLASS IN THE FINAL POSITION NORMAL TO THE SPIDER; TIGHTEN THE TWO M16 LOW HEXAGON JAM NUTS (M16LJN-A4) THAT ARE PART OF THE ROTULE ASSEMBLY (RB22A) TO SECURE THE GLASS POSITION. THE SPIDER SHOULD BE POSITIONED NEAR THE CENTER OF THE ROTULE THREADED ROD, UNLESS NOTED OTHERWISE BY THE DESIGN ENGINEER.

7) PLACE ONE TEFLON WASHER (RW16-TP) AND ONE STAINLESS STEEL WASHER (RW16-SS) ON THE THREADED ROD. (OMIT TEFLON WASHER AT ALL FIXED-HOLE CONNECTIONS.) SPIN ON TWO M16 LOW HEXAGON JAM NUTS (M16LJN-A4). HAND-TIGHTEN ALL NUTS TO HOLD THIS GLASS POSITION.

NOTE: AT A FIXED-HOLE CONNECTION, FULLY TIGHTEN THE NUTS AGAINST THE SPIDER. TO PREVENT THE ROTULE FROM SPINNING (AND THE SEALANT FROM FAILING), CLAMP THE FLATS OF THE THREADED ROD BEFORE TIGHTENING.

Approved as complying with the Florida Building Code
Date 08/25/2011
NOA# 11-0412.06
Miami Dade Product Control
By

ALL RIGHTS RESERVED. THIS DRAWING OR ANY PART THEREOF MUST NOT BE REPRODUCED WITHOUT PERMISSION OF NOVUM STRUCTURES LLC.

Larson Engineering, Inc.
3301 Lakeo Road
Wake Bear Lake, MN 55110
(P) 651.481.9100 (F) 651.481.9201

Florida Firm No. F-02000005178
Certificate of Authorization #9803
Ethan A. Charpentier
Registration No. 65106

ENGINEER STAMP:

APPROVAL STAMP:

NOVUM STAMP:

REV.NO.	DATE	DWG.BY	CHK.BY
1	22JUL11	BTH	SWK
REVISED PER COMMENTS BY BCCO			

Novum Structures LLC
W126 N8585 Westbrook Crossing
Menomonee Falls, WI 53051 USA
T 262.255.5561
www.novumstructures.com
info@novumstructures.com

NOVUM

PROJECT: NOVUM'S HURRICANE PSG GLASS SYSTEM: H001 VERTICAL WALL SYSTEM

DRAWING DESCRIPTION: RB22-16 FABRICATION DRAWING

DRAWN BY: BTH	DATE: 04MAR10
CHECKED BY: SWK	APPROVED BY: SWK
SCALE: N.T.S.	PROJECT MANAGER: BB

PROJECT NUMBER: 25-183

SHEET NUMBER: MU100A-1

24Aug2011 10:54 AM P:\PROJECTS\2005\25-183 MIC EARLINGTON HEIGHTS CONNECTOR\2103 DRAWINGS\AUTOCAD DWGS\NOA\MU100A.DWG

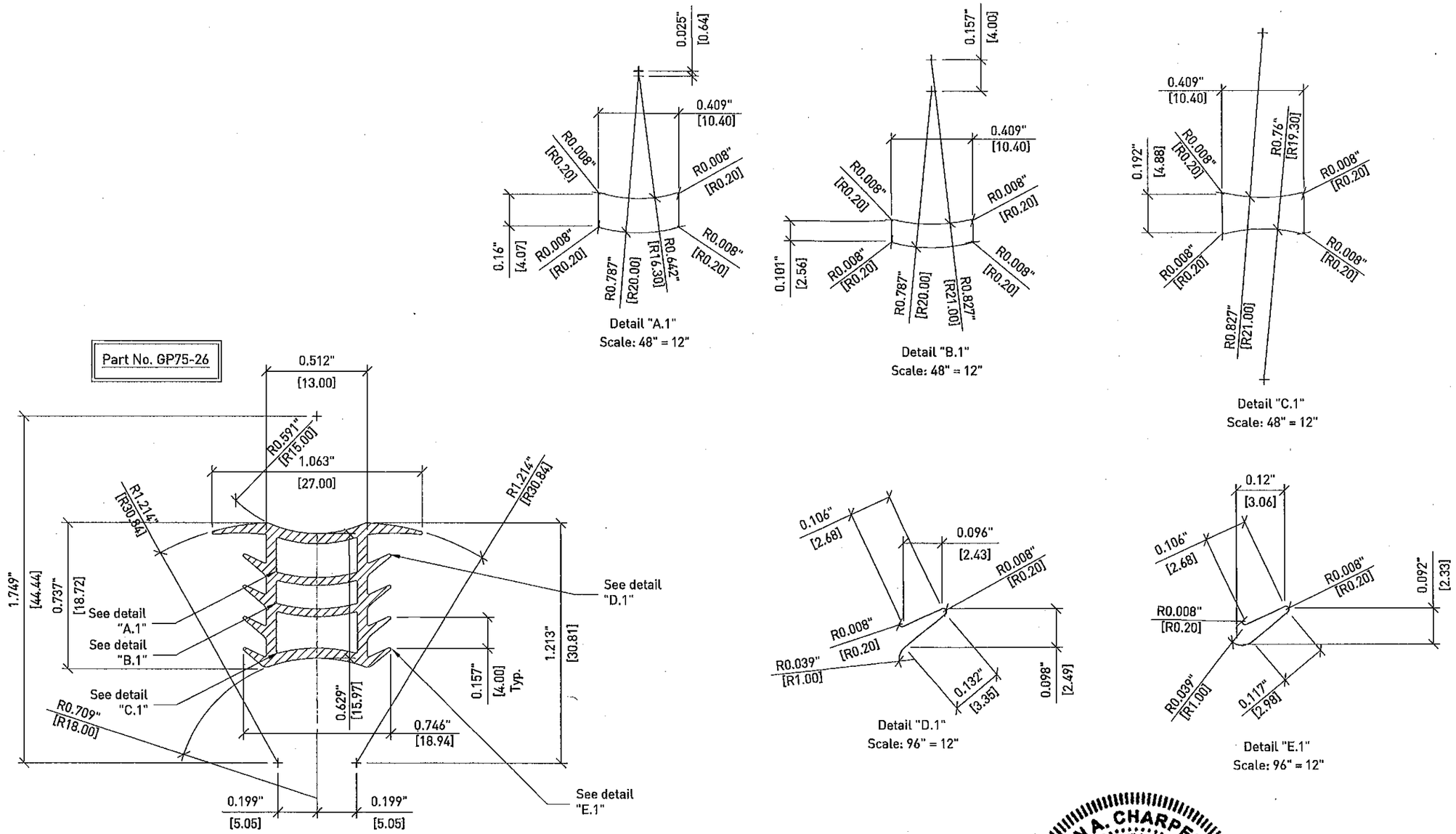

01 M100B M100B

Detail: silicone extrusion gasket

Durometer = 70 +/-5 Shore A

Scale: 48" = 12"

ETHAN A. CHARPENTIER
LICENSE
No. 65106
STATE OF FLORIDA
PROFESSIONAL ENGINEER

AUG 2 5 2011

Approved as complying with the Florida Building Code
Date 08/25/2011
NOA# 11-0412.06
Miami Dade Product Control
By

ALL RIGHTS RESERVED. THIS DRAWING OR ANY PART THEREOF MUST NOT BE REPRODUCED WITHOUT PERMISSION OF NOVUM STRUCTURES LLC.

Larson Engineering, Inc.
3524 Lakers Road
White River Lake, NY 53110
(P) 631.481.8120 (F) 631.481.8201

Florida Firm No. F-02000005125
Certificate of Authorization #9805
Ethan A. Charpentier
Registration No. 65106

ENGINEER STAMP:

APPROVAL STAMP:

NOVUM STAMP:

REV.NO.	DATE	DWG.BY	CHK.BY
1	23JUL11	BTH	SWK

REVISED PER COMMENTS BY BCCO

Novum Structures LLC
W126 N8585 Westbrook Crossing
Menomonee Falls, WI 53051 USA
T 262.255.5561
www.novumstructures.com
info@novumstructures.com

NOVUM

PROJECT:
NOVUM'S HURRICANE PSG
GLASS SYSTEM: HG01
VERTICAL WALL SYSTEM

DRAWING DESCRIPTION:
MOCK-UP #1 & #2
SILICONE EXTRUSION
DETAIL

DRAWN BY: BTH	DATE: 04MAR10
CHECKED BY: SWK	APPROVED BY: SWK
SCALE: 48"=12"	PROJECT MANAGER: GB
PROJECT NUMBER: 25-183	
SHEET NUMBER: MU100B-1	

P:\PROJECTS\2005\25-183 MIC EARLINGTON HEIGHTS CONNECTOR\2103 DRAWINGS\AUTOCAD DWGS\NOA\MU100B.DWG

28Jul2011 3:03 PM

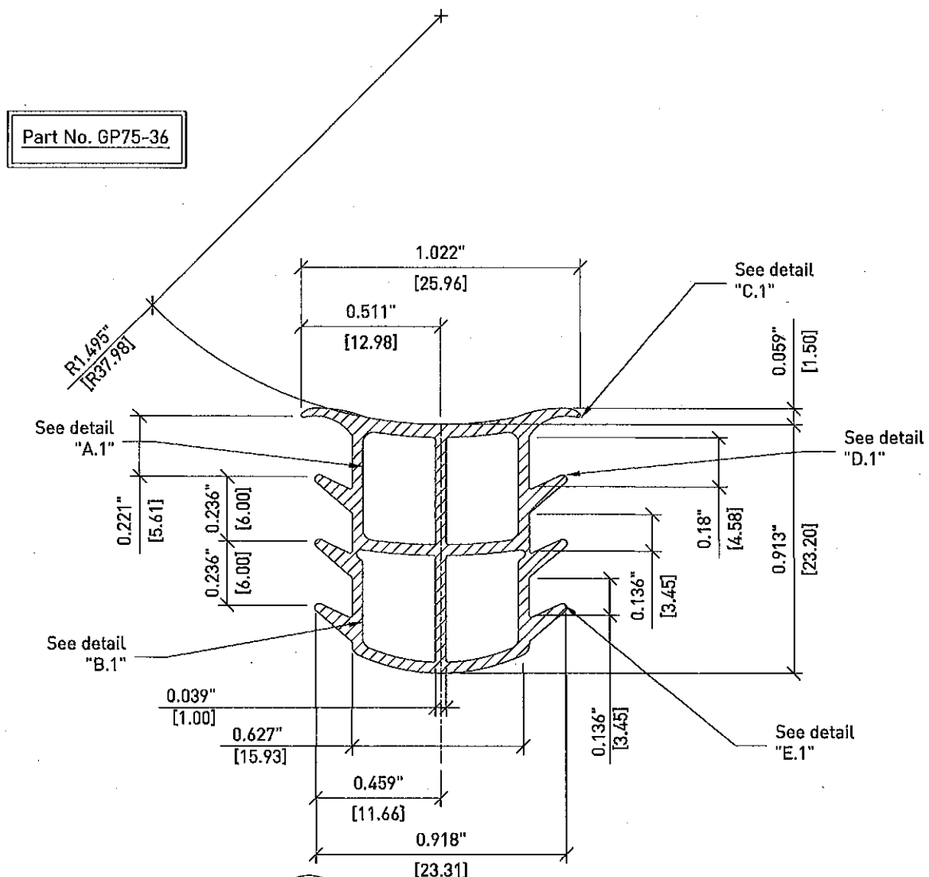

01 M100C M100C Detail: silicone extrusion gasket
Durometer = 70 +/-5 Shore A
Scale: 48" = 12"

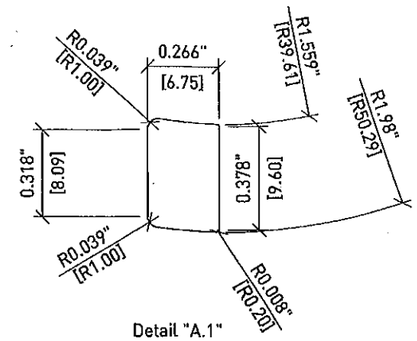

Detail "A.1"
Scale: 48" = 12"

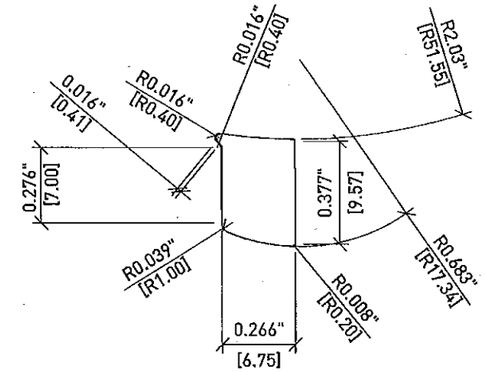

Detail "B.1"
Scale: 48" = 12"

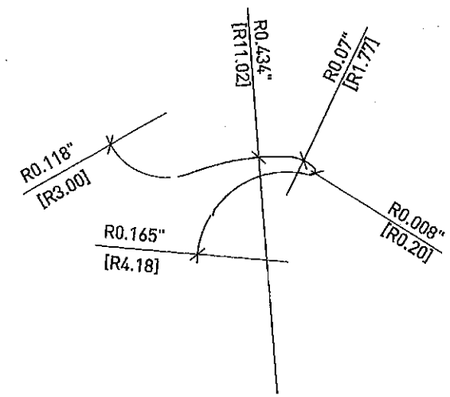

Detail "C.1"
Scale: 96" = 12"

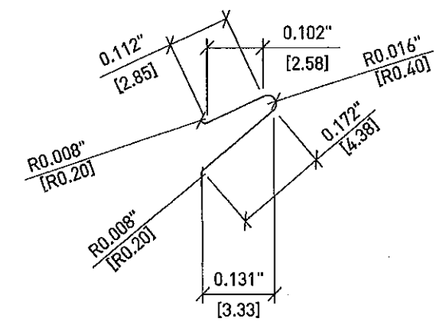

Detail "D.1"
Scale: 96" = 12"

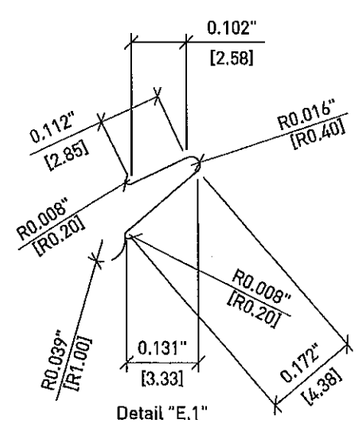

Detail "E.1"
Scale: 96" = 12"

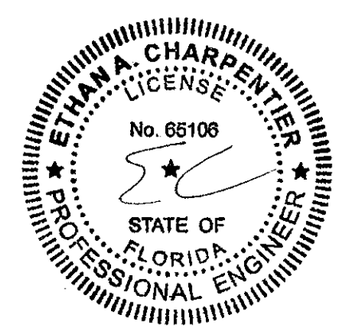

AUG 2 5 2011

Approved as complying with the Florida Building Code
Date 08/25/2011
NOA# 11-0412.06
Miami Dade Product Control
By

ALL RIGHTS RESERVED. THIS DRAWING OR ANY PART THEREOF MUST NOT BE REPRODUCED WITHOUT PERMISSION OF NOVUM STRUCTURES LLC.

Larson Engineering, Inc.
3524 Lakeview Road
White Bear Lake, MN 55110
(P) 651.481.8120 (F) 651.481.9201

Florida Firm No. F-02000005175
Certificate of Authorization #5803
Ethan A. Charpentier
Registration No. 65106

ENGINEER STAMP:

APPROVAL STAMP:

NOVUM STAMP:

REV.NO.	DATE	DWG.BY	CHK.BY
1	23JUL11	BTH	SWK

REVISED PER COMMENTS BY BCCO

Novum Structures LLC
W126 N8585 Westbrook Crossing
Menomonee Falls, WI 53051 USA
T 262.255.5561
www.novumstructures.com
info@novumstructures.com

NOVUM

PROJECT:
NOVUM'S HURRICANE PSG
GLASS SYSTEM: HG01
VERTICAL WALL SYSTEM

DRAWING DESCRIPTION:
MOCK-UP #1 & #2
SILICONE EXTRUSION
DETAIL @ CHAMFERED JOINT

DRAWN BY:	DATE:
BTH	04MAR10
CHECKED BY: SWK	APPROVED BY: SWK
SCALE: 48"=12"	PROJECT MANAGER: GB

PROJECT NUMBER: 25-183

SHEET NUMBER: MU100C-1

P:\PROJECTS\2005\25-183 MIC EARLINGTON HEIGHTS CONNECTOR\2103 DRAWINGS\AUTOCAD DWGS\NOA\MU100C.DWG
28Jul2011 3:01 PM

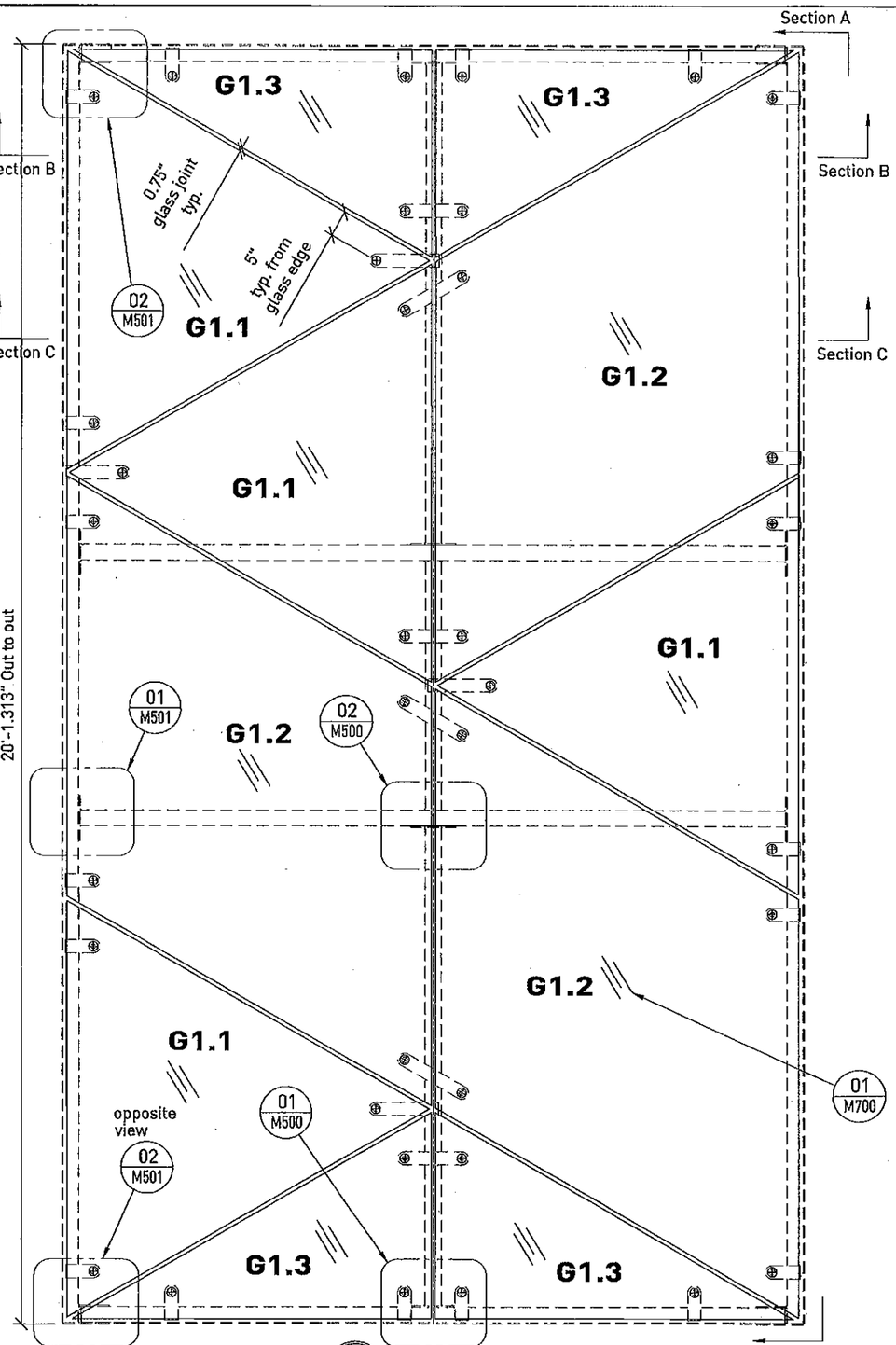

01 M200 | M200 Detail: plan view: from above looking down
Scale: 1"=12"

Section A

Section A-A

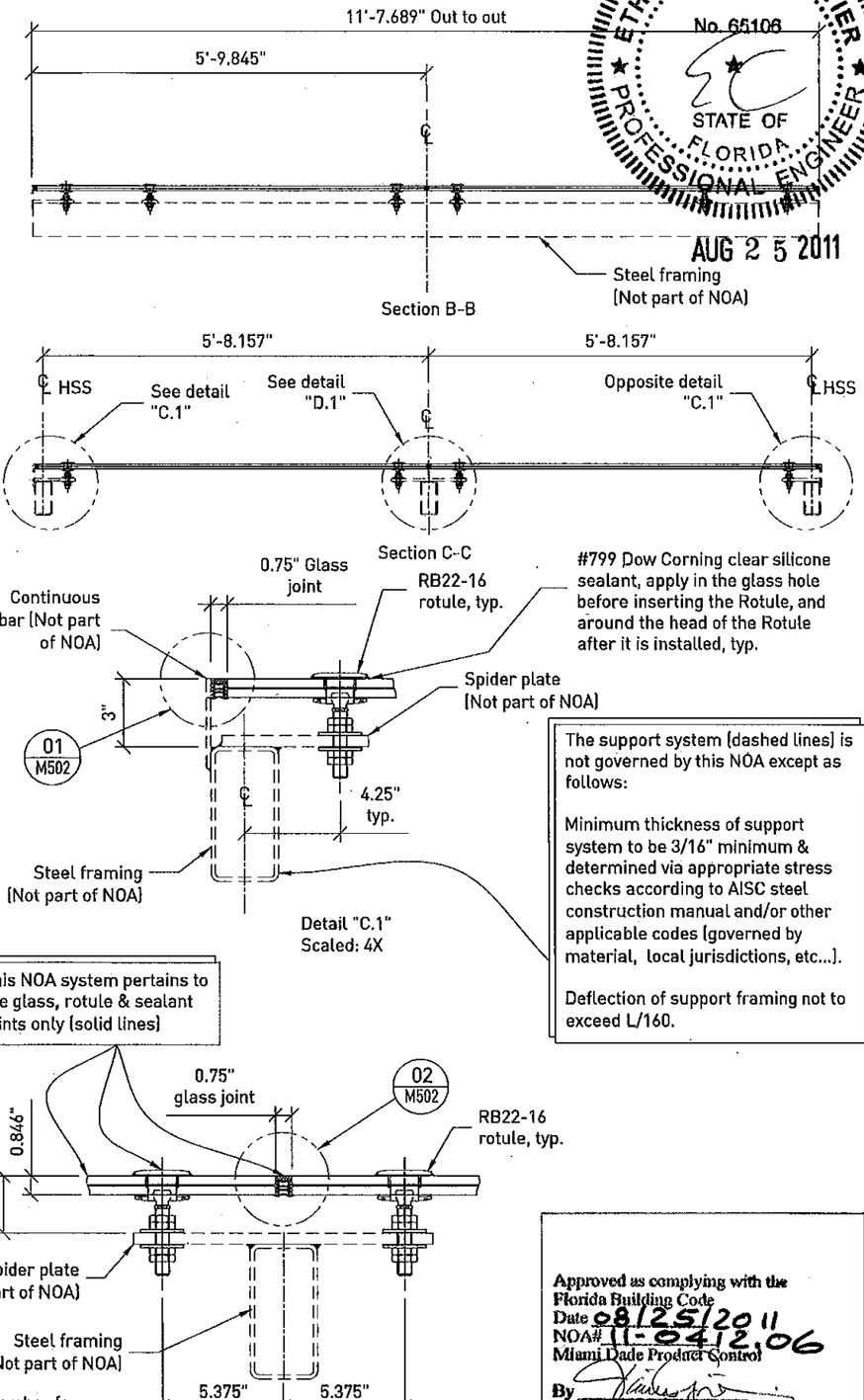

The support system (dashed lines) is not governed by this NOA except as follows:

Minimum thickness of support system to be 3/16" minimum & determined via appropriate stress checks according to AISC steel construction manual and/or other applicable codes (governed by material, local jurisdictions, etc...).

Deflection of support framing not to exceed L/160.

Approved as complying with the Florida Building Code
Date 08/25/2011
NOA# 11-0412.06
Miami Dade Product Control
By

ETHAN A. CHARPENTIER
LICENSE
No. 65106
STATE OF FLORIDA
PROFESSIONAL ENGINEER

AUG 25 2011

ALL RIGHTS RESERVED. THIS DRAWING OR ANY PART THEREOF MUST NOT BE REPRODUCED WITHOUT PERMISSION OF NOVUM STRUCTURES LLC.

Larson Engineering, Inc.
3426 Labore Road
White Bear Lake, MN 55110
(P) 651.483.9120 (F) 651.481.9201

Florida Firm No. F-03000005175
Certificate of Authorization #3803
Ethan A. Charpentier
Registration No. 65106
ENGINEER STAMP:

APPROVAL STAMP:

NOVUM STAMP:

REV.NO.	DATE	DWG.BY	CHK.BY
1	23JUL11	BTH	SWK

REVISED PER COMMENTS BY BCCO

Novum Structures LLC
W126 N8585 Westbrook Crossing
Menomonee Falls, WI 53051 USA
T 262.255.5561
www.novumstructures.com
info@novumstructures.com

NOVUM

PROJECT:
NOVUM'S HURRICANE PSG
GLASS SYSTEM: H001
VERTICAL WALL SYSTEM

DRAWING DESCRIPTION:
MOCK-UP #1
PLAN & ELEVATION VIEWS

DRAWN BY: BTH	DATE: 02MAR10
CHECKED BY: SWK	APPROVED BY: SWK
SCALE: 1"=12"	PROJECT MANAGER: GB

PROJECT NUMBER: 25-183

SHEET NUMBER: MU200-1

28Jul2011 3:47 PM P:\PROJECTS\2005\25-183 MIC EARLINGTON HEIGHTS CONNECTOR\2103 DRAWINGS\AUTOCAD DWGS\NOA\MU200.DWG

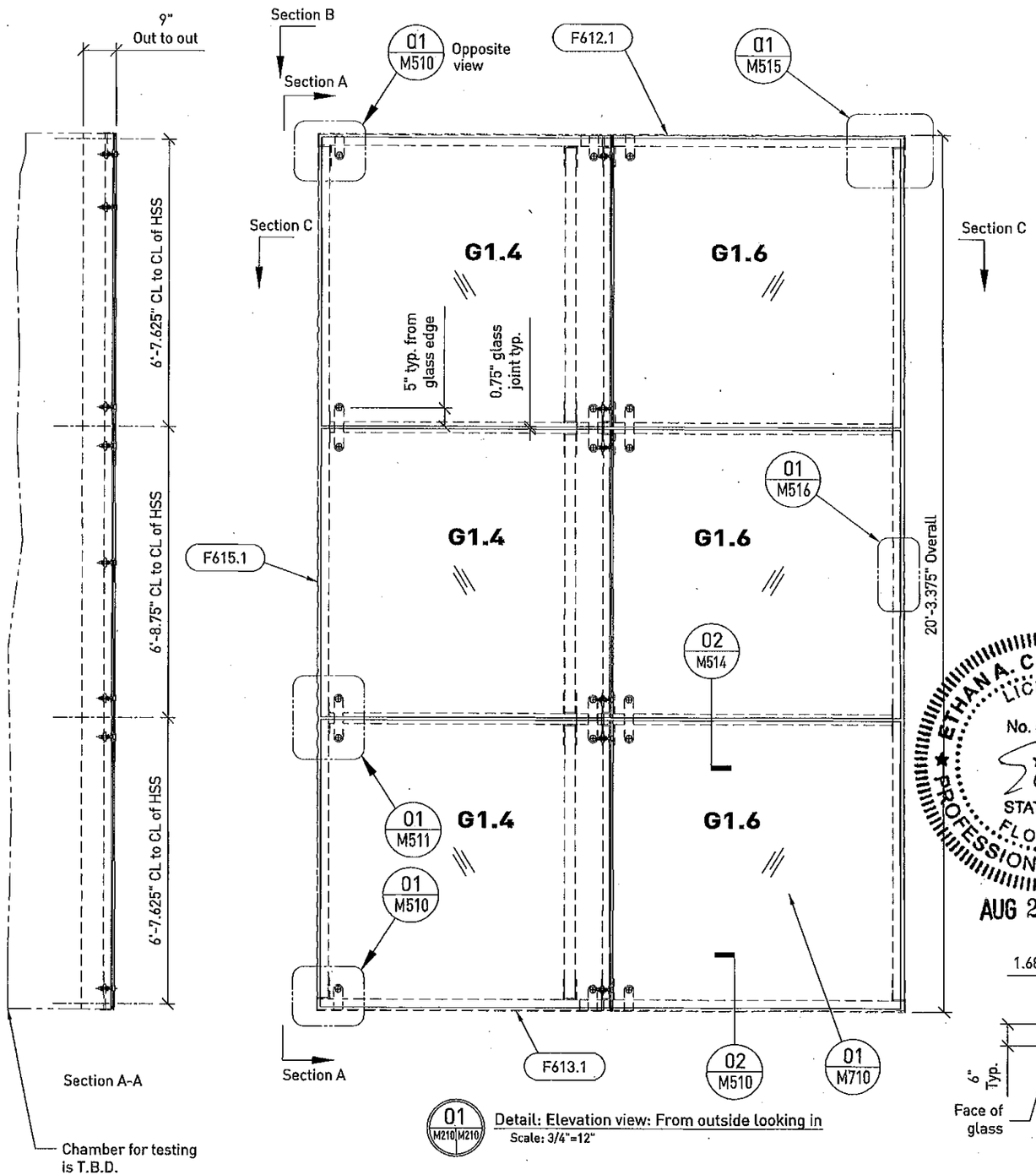

01 M210 M210 Detail: Elevation view: From outside looking in
Scale: 3/4"=12"

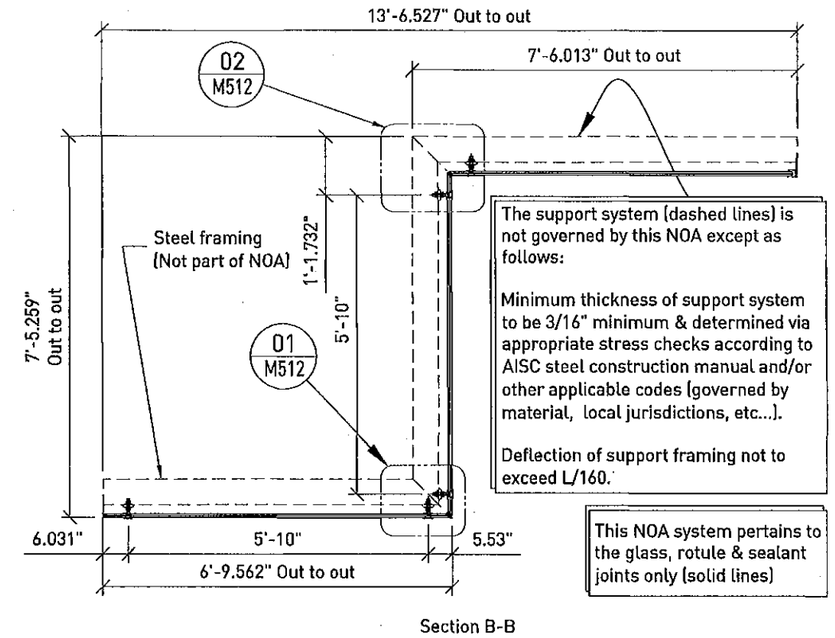

The support system (dashed lines) is not governed by this NOA except as follows:

Minimum thickness of support system to be 3/16" minimum & determined via appropriate stress checks according to AISC steel construction manual and/or other applicable codes (governed by material, local jurisdictions, etc...).

Deflection of support framing not to exceed L/160.

This NOA system pertains to the glass, rotule & sealant joints only (solid lines)

Section B-B

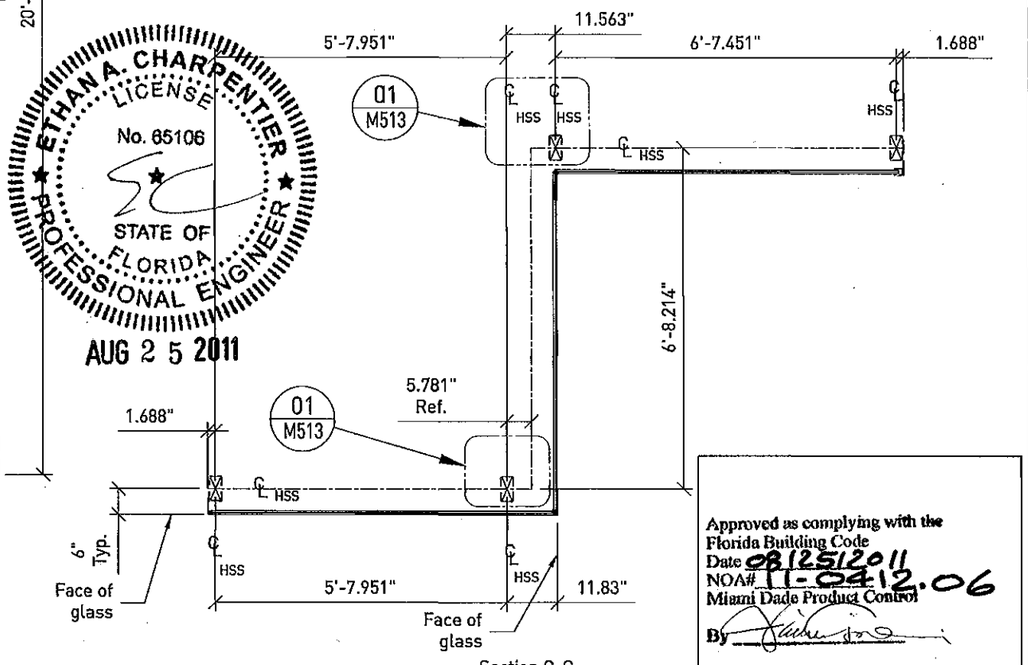

Section C-C

ETHAN A. CHARPENTIER
LICENSE
No. 65106
STATE OF FLORIDA
PROFESSIONAL ENGINEER
AUG 2 5 2011

Approved as complying with the Florida Building Code
Date 08/25/2011
NOA# 11-0412.06
Miami Dade Product Control
By

ALL RIGHTS RESERVED. THIS DRAWING OR ANY PART THEREOF MUST NOT BE REPRODUCED WITHOUT PERMISSION OF NOVUM STRUCTURES LLC.

Larson Engineering, Inc.
3526 Lebanon Road
White River Lake, MN 55110
(P) 651.481.8120 (F) 651.481.9201

Florida Firm No. F-02000005175
Certificate of Authorization #2003
Ethan A. Charpentier
Registration No. 65106

ENGINEER STAMP:

APPROVAL STAMP:

NOVUM STAMP:

REV.NO.	DATE	DWG.BY	CHK.BY
1	23JUL11	BTH	SWK

REVISED PER COMMENTS BY BCCO

Novum Structures LLC
W126 N8585 Westbrook Crossing
Menomonee Falls, WI 53051 USA
T 262.255.5561
www.novumstructures.com
info@novumstructures.com

NOVUM

PROJECT:
NOVUM'S HURRICANE PSG
GLASS SYSTEM: HG01
VERTICAL WALL SYSTEM

DRAWING DESCRIPTION:
MOCK- UP #2
PLAN AND ELEVATION VIEWS

DRAWN BY: BTH	DATE: 02MAR10
CHECKED BY: SWK	APPROVED BY: SWK
SCALE: 3/4"=12"	PROJECT MANAGER: GB
PROJECT NUMBER: 25-183	
SHEET NUMBER: MU210-1	

28Jul2011 4:18 PM P:\PROJECTS\2005\25-183 MIC EARLINGTON HEIGHTS CONNECTOR\2103 DRAWINGS\AUTOCAD DWGS\NOA\MU210.DWG

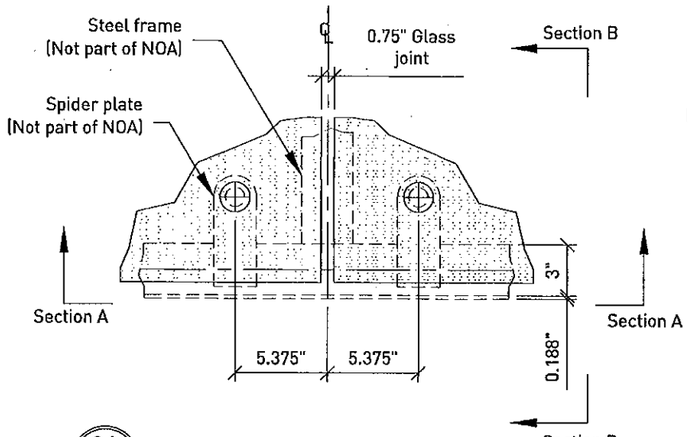

01 M200 M500 Detail: plan view: from above looking down
Scale: 3"=12"

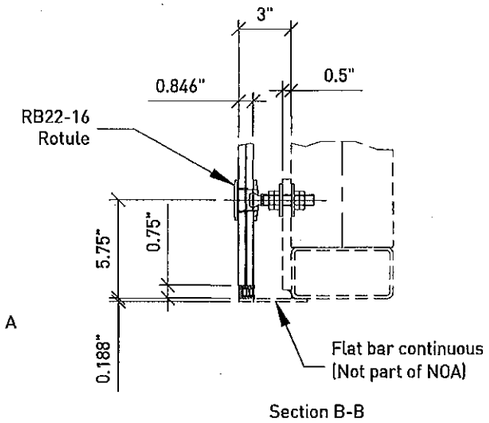

Section B-B

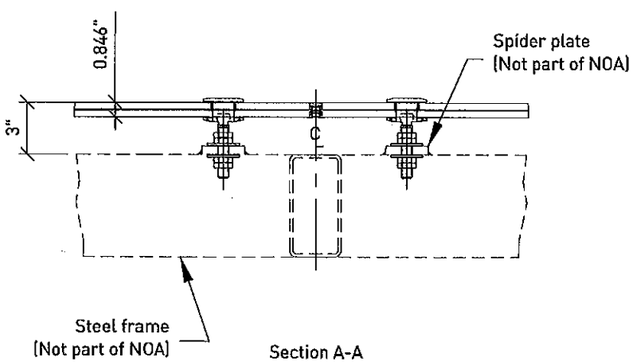

Section A-A

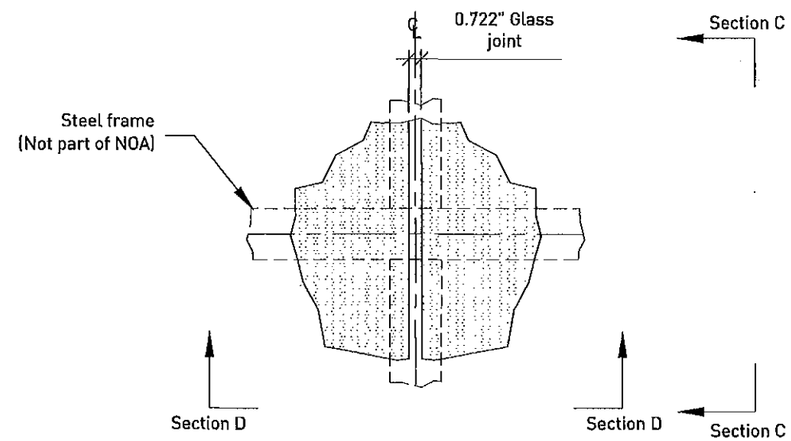

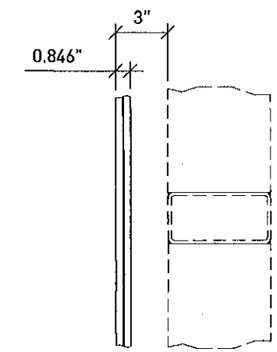

Section C-C

02 M200 M500 Detail: plan view: from above looking down
Scale: 3"=12"

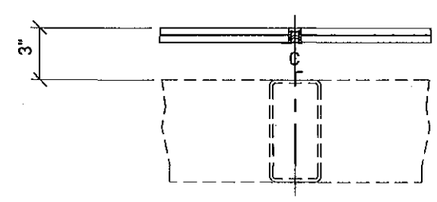

Section D-D

This NOA system pertains to the glass, rotule & sealant joints only (solid lines)

The support system (dashed lines) is not governed by this NOA except as follows:

Minimum thickness of support system to be 3/16" minimum & determined via appropriate stress checks according to AISC steel construction manual and/or other applicable codes (governed by material, local jurisdictions, etc...).

Deflection of support framing not to exceed L/160.

ETHAN A. CHARPENTIER
LICENSE
No. 65106
STATE OF FLORIDA
PROFESSIONAL ENGINEER
AUG 2 5 2011

Approved as complying with the Florida Building Code
Date 08/25/2011
NOA# 11-0412.06
Miami Dade Product Control
By

ALL RIGHTS RESERVED. THIS DRAWING OR ANY PART THEREOF MUST NOT BE REPRODUCED WITHOUT PERMISSION OF NOVUM STRUCTURES LLC.

Larson Engineering, Inc.
3426 Lebanon Road
Belle Bear Lake, MN 55110
(P) 651.481.8120 (F) 651.481.9201

Florida Firm No. F-02000005175
Certificate of Authorization #9803
Ethan A. Charpentier
Registration No. 65106

ENGINEER STAMP:

APPROVAL STAMP:

NOVUM STAMP:

REV.NO.	DATE	DWG.BY	CHK.BY
1	23JUL11	BTH	SWK

REVISED PER COMMENT BY BCCO

Novum Structures LLC
W126 N8585 Westbrook Crossing
Menomonee Falls, WI 53051 USA
T 262.255.5561
www.novumstructures.com
info@novumstructures.com

NOVUM

PROJECT:
NOVUM'S HURRICANE PSG
GLASS SYSTEM: HG01
VERTICAL WALL SYSTEM

DRAWING DESCRIPTION:
MOCK- UP #1
SECTION & DETAIL VIEWS

DRAWN BY: BTH	DATE: 02MAR10
CHECKED BY: SWK	APPROVED BY: SWK
SCALE: 3"=12"	PROJECT MANAGER: GB
PROJECT NUMBER: 25-183	
SHEET NUMBER: MU500-1	

28Jul2011 3:32 PM P:\PROJECTS\2005\25-183 MIC EARLINGTON HEIGHTS CONNECTOR\2103 DRAWINGS\AUTOCAD DWGS\NOA\MU500.DWG

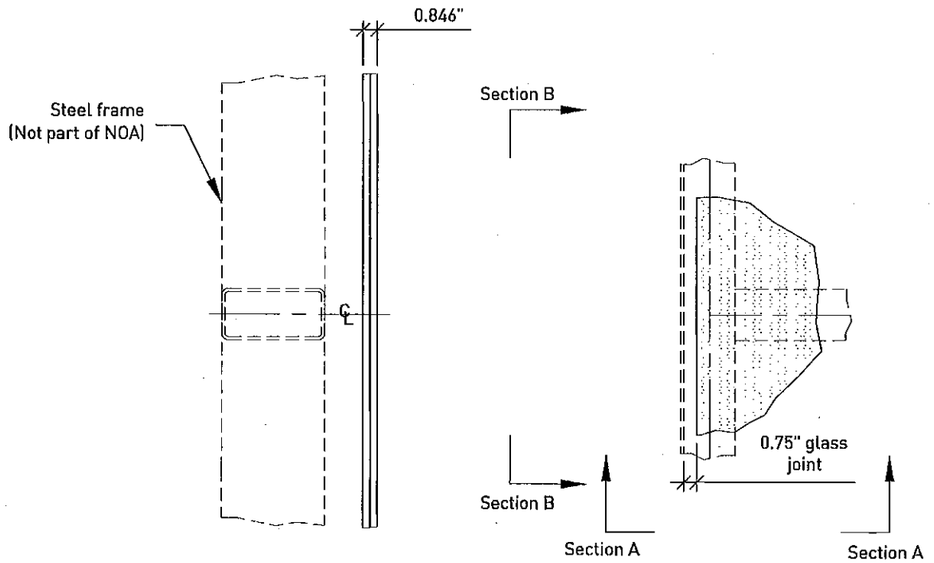

01 M200 M501 Detail: plan view: from above looking down
Scale: 3"=12"

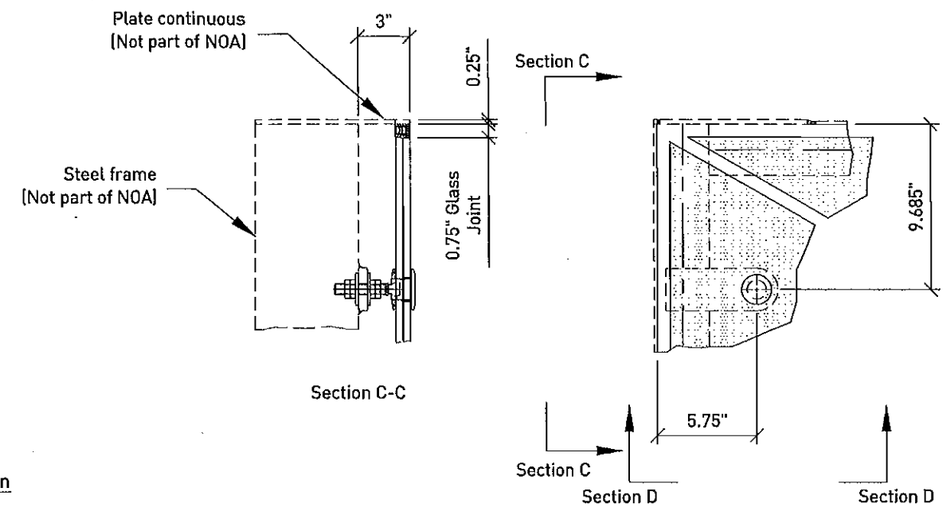

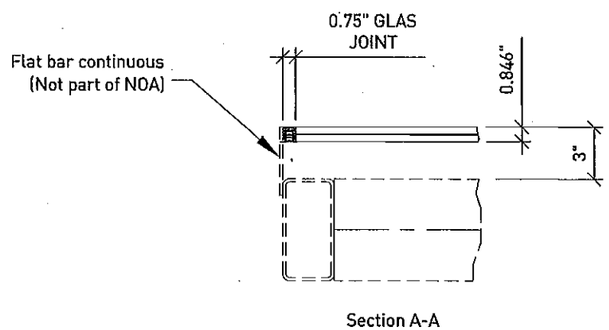

02 M200 M501 Detail: Corner condition
Scale: 3"=12"

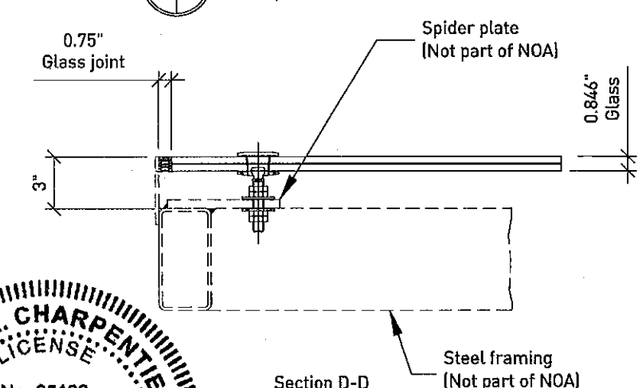

This NOA system pertains to the glass, rotule & sealant joints only (solid lines)

The support system (dashed lines) is not governed by this NOA except as follows:

Minimum thickness of support system to be 3/16" minimum & determined via appropriate stress checks according to AISC steel construction manual and/or other applicable codes (governed by material, local jurisdictions, etc...).

Deflection of support framing not to exceed L/160.

ETHAN A. CHARPENTIER
LICENSE
No. 65106
STATE OF FLORIDA
PROFESSIONAL ENGINEER

AUG 2 5 2011

Approved as complying with the Florida Building Code
Date 08/25/2011
NOA# 11-0412.06
Miami Dade Product Control
By

ALL RIGHTS RESERVED. THIS DRAWING OR ANY PART THEREOF MUST NOT BE REPRODUCED WITHOUT PERMISSION OF NOVUM STRUCTURES LLC.

Larson Engineering, Inc.
3524 Lebanon Road
White Bear Lake, MN 55110
(P) 651.481.9120 (F) 651.481.9201

Florida Firm No. F-03000005175
Certificate of Authorization #9803
Ethan A. Charpentier
Registration No. 65106

ENGINEER STAMP:

APPROVAL STAMP:

NOVUM STAMP:

REV.NO.	DATE	DWG.BY	CHK.BY
1	23JUL11	BTH	SWK

REVISED PER COMMENTS BY BCCO

Novum Structures LLC
W126 N8585 Westbrook Crossing
Menomonee Falls, WI 53051 USA
T 262.255.5561
www.novumstructures.com
info@novumstructures.com

NOVUM

PROJECT:
NOVUM'S HURRICANE PSG
GLASS SYSTEM: HG01
VERTICAL WALL SYSTEM

DRAWING DESCRIPTION:
MOCK- UP #1
SECTION & DETAIL VIEWS

DRAWN BY: BTH	DATE: 02MAR10
CHECKED BY: SWK	APPROVED BY: SWK
SCALE: 3"=12"	PROJECT MANAGER: GB
PROJECT NUMBER: 25-183	
SHEET NUMBER: MU501-1	

28Jul2011 3:44 PM P:\PROJECTS\2005\25-183 MIC EARLINGTON HEIGHTS CONNECTOR\2103 DRAWINGS\AUTOCAD DWGS\NOA\MU501.DWG

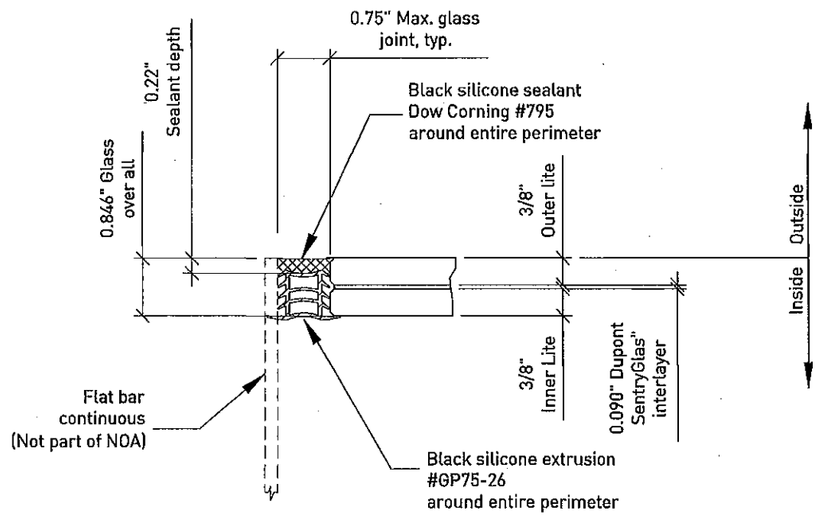

01 M200 M502 Detail: plan view: thru glass joint @ 3/8" + 3/8" glass
Scale: 6"=12"

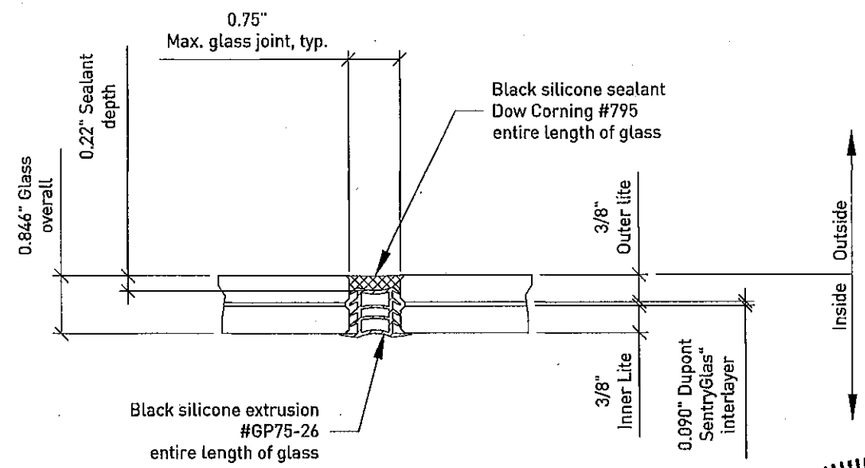

02 M200 M502 Detail: plan view: thru glass joint @ 3/8" + 3/8" glass
Scale: 6"=12"

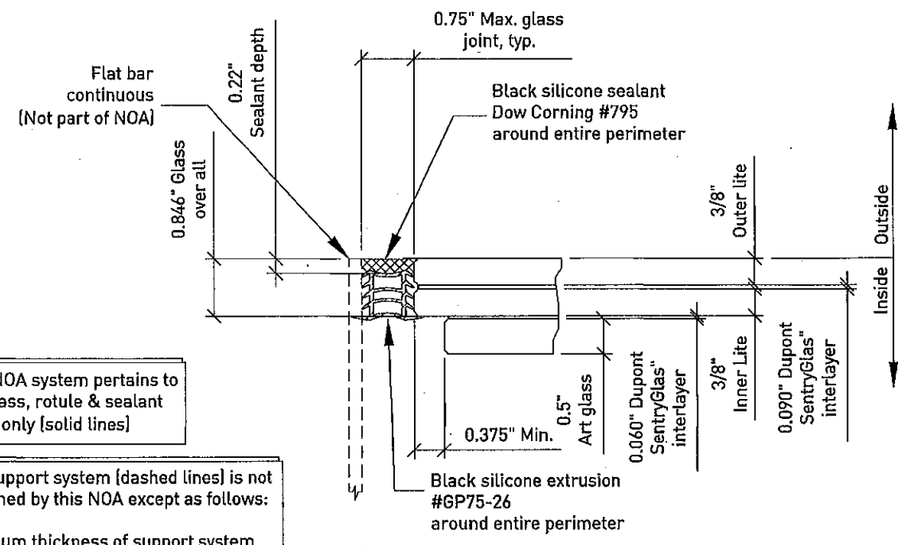

03 - M502 Detail: Sim to 01 above when using Art glass
Scale: 6"=12"

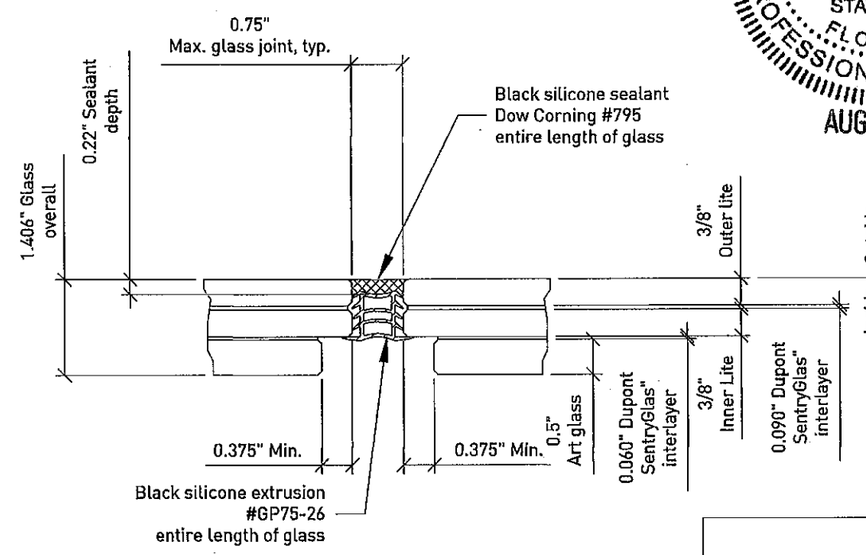

04 - M502 Detail: Sim to 02 above when using Art glass
Scale: 6"=12"

This NOA system pertains to the glass, rotule & sealant joints only (solid lines)

The support system (dashed lines) is not governed by this NOA except as follows:

Minimum thickness of support system to be 3/16" minimum & determined via appropriate stress checks according to AISC steel construction manual and/or other applicable codes (governed by material, local jurisdictions, etc...).

Deflection of support framing not to exceed L/160.

ETHAN A. CHARPENTIER
LICENSE No. 65106
STATE OF FLORIDA
PROFESSIONAL ENGINEER
AUG 25 2011

Approved as complying with the Florida Building Code
Date 08/25/2011
NOA# 11-0412.06
Miami Dade Product Control
By

ALL RIGHTS RESERVED. THIS DRAWING OR ANY PART THEREOF MUST NOT BE REPRODUCED WITHOUT PERMISSION OF NOVUM STRUCTURES LLC.

Larson Engineering, Inc.
3524 Labore Road
White Bear Lake, MN 55110
(P) 651.653.0120 (F) 651.481.9201

Florida Firm No. F-02000005123
Certificate of Authorization #6803
Ethan A. Charpentier
Registration No. 65106
EC28012013748(P)

APPROVAL STAMP:

NOVUM STAMP:

REV.NO.	DATE	DWG.BY	CHK.BY
1	23JUL11	BTH	SWK
REVISED PER COMMENTS BY BCCO			

Novum Structures LLC
W126 N8585 Westbrook Crossing
Menomonee Falls, WI 53051 USA
T 262.255.5561
www.novumstructures.com
info@novumstructures.com

NOVUM

PROJECT:
NOVUM'S HURRICANE PSG
GLASS SYSTEM:HG01
VERTICAL WALL SYSTEM

DRAWING DESCRIPTION:
MOCK-UP #1
GLASS JOINT DETAILS

DRAWN BY: BTH	DATE: 04MAR10
CHECKED BY: SWK	APPROVED BY: SWK
SCALE: FULL	PROJECT MANAGER: GB

PROJECT NUMBER: 25-183

SHEET NUMBER: MU502-1

24Aug2011 10:57 AM P:\PROJECTS\2005\25-183 MIC EARLINGTON HEIGHTS CONNECTOR\2103 DRAWINGS\AUTOCAD DWGS\NOA\MU502.DWG

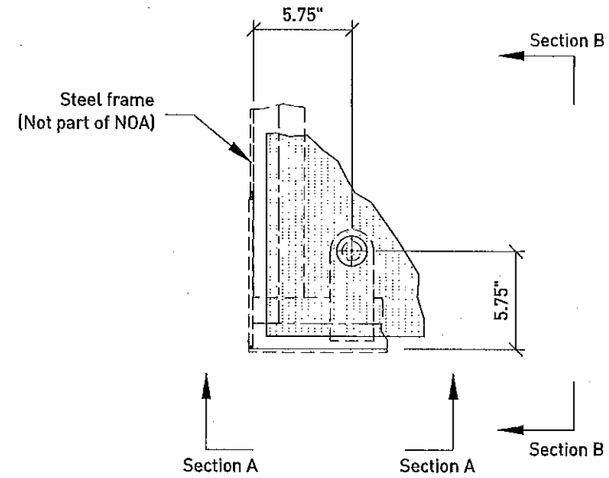

01 M210 M510 Detail: Corner condition
Scale: 3"=12"

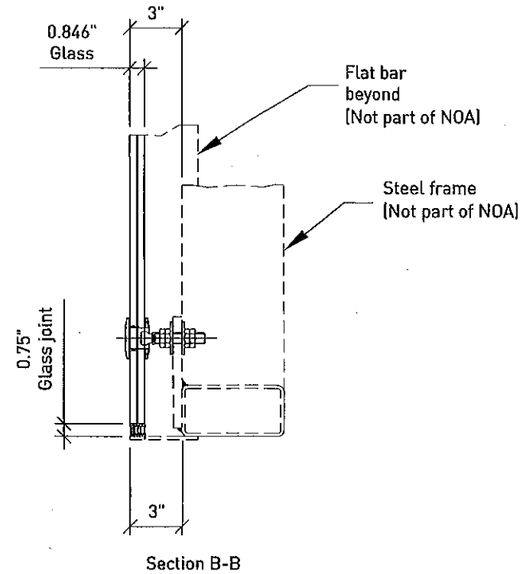

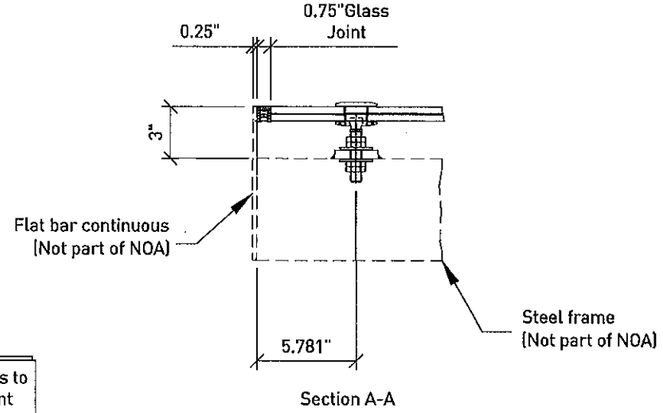

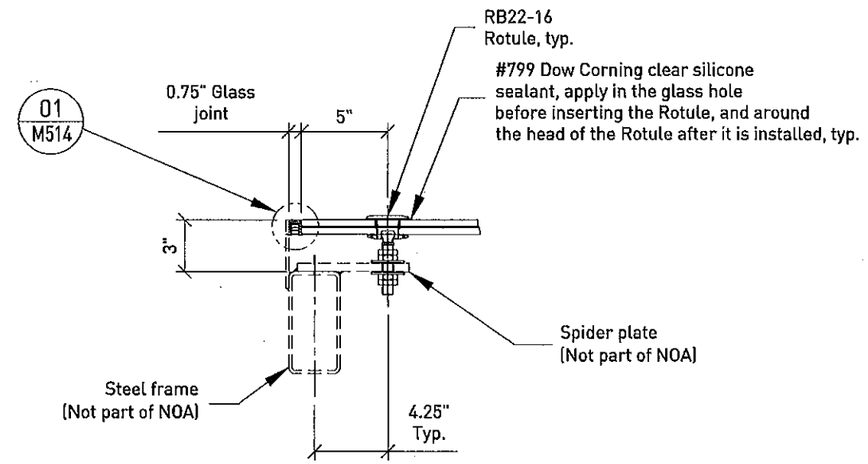

02 M210 M510 Section: Typical edge condition @ spider arm
Scale: 3"=12"

This NOA system pertains to the glass, rotule & sealant joints only (solid lines)

The support system (dashed lines) is not governed by this NOA except as follows:

Minimum thickness of support system to be 3/16" minimum & determined via appropriate stress checks according to AISC steel construction manual and/or other applicable codes (governed by material, local jurisdictions, etc...).

Deflection of support framing not to exceed L/160.

ETHAN A. CHARPENTIER
LICENSE
No. 65106
STATE OF
FLORIDA
PROFESSIONAL ENGINEER

Approved as complying with the
Florida Building Code
Date 08/25/2011
NOA# 11-0412.06
Miami Dade Product Control
By

AUG 25 2011

ALL RIGHTS RESERVED. THIS DRAWING OR ANY PART THEREOF MUST NOT BE REPRODUCED WITHOUT PERMISSION OF NOVUM STRUCTURES LLC.

Larson Engineering, Inc.
3324 Lakore Road
Nine Mile Falls, WA 99110
(P) 831.461.9120 (F) 831.461.9301

Florida Firm No. F-03000005135
Certificate of Authorization #9903
Ethan A. Charpentier
Registration No. 65106

ENGINEER STAMP

APPROVAL STAMPS

NOVUM STAMP

REV.NO.	DATE	DWG.BY	CHK.BY
1	23JUL11	BTH	SWK

REVISED PER COMMENTS BY BCCO

Novum Structures LLC
W126 N8585 Westbrook Crossing
Menomonee Falls, WI 53051 USA
T 262.255.5561
www.novumstructures.com
info@novumstructures.com

NOVUM

PROJECT:
NOVUM'S HURRICANE PSG
GLASS SYSTEM: HG01
VERTICAL WALL SYSTEM

DRAWING DESCRIPTION
MOCK- UP #2
SECTION & DETAIL VIEWS

DRAWN BY: BTH	DATE: 02MAR10
CHECKED BY: SWK	APPROVED BY: SWK
SCALE: 3"=12"	PROJECT MANAGER: GB

PROJECT NUMBER:
25-183

SHEET NUMBER:
MU510-1

P:\PROJECTS\2005\25-183 MIC EARLINGTON HEIGHTS CONNECTOR\2103 DRAWINGS\AUTOCAD DWGS\NOA\MU510.DWG
2Aug2011 9:48 AM

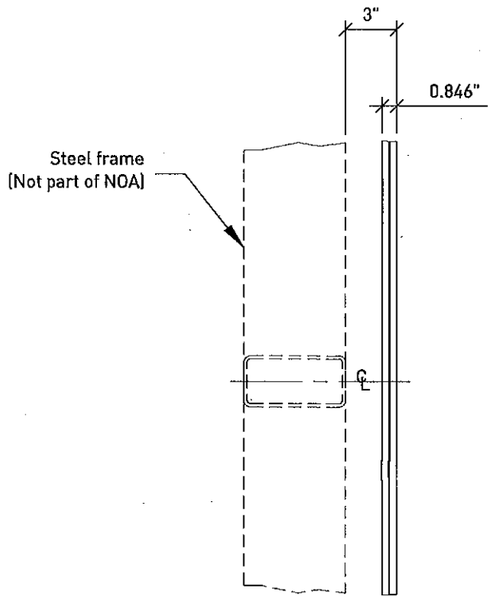

Section B-B

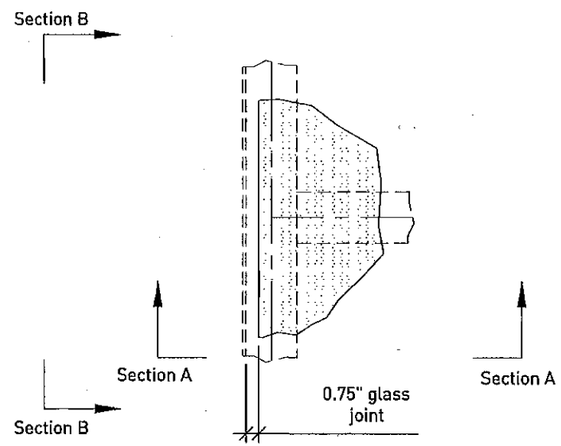

01 M210 M511 Detail: Typical edge connection
Scale: 3"=12"

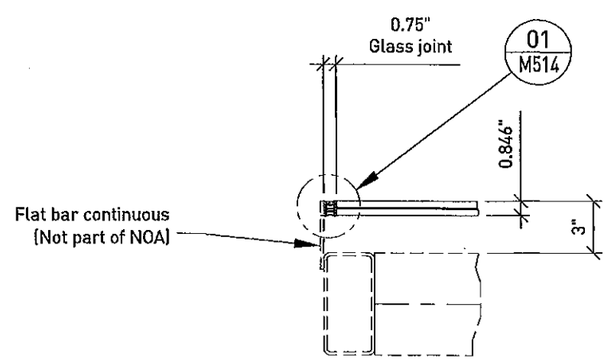

Section A-A

This NOA system pertains to the glass, rotule & sealant joints only (solid lines)

The support system (dashed lines) is not governed by this NOA except as follows:

Minimum thickness of support system to be 3/16" minimum & determined via appropriate stress checks according to AISC steel construction manual and/or other applicable codes (governed by material, local jurisdictions, etc...).

Deflection of support framing not to exceed L/160.

ETHAN A. CHARPENTIER
LICENSE
No. 65106
STATE OF FLORIDA
PROFESSIONAL ENGINEER

AUG 2 5 2011

Approved as complying with the Florida Building Code
Date 08/25/2011
NOA# 11-0412.06
Miami Dade Product Control
By

ALL RIGHTS RESERVED. THIS DRAWING OR ANY PART THEREOF MUST NOT BE REPRODUCED WITHOUT PERMISSION OF NOVUM STRUCTURES LLC.

Larson Engineering, Inc.
3524 Lakers Road
White Bear Lake, MN 55110
(V) 651.481.3133 (F) 651.481.9301

Florida Firm No. F-02000005133
Certificate of Authorization #9003
Ethan A. Charpentier
Registration No. 65106

ENGINEER STAMP

APPROVAL STAMP

NOVUM STAMP

REV.NO.	DATE	DWG.BY	CHK.BY
1	23JUL11	BTH	SWK

REVISED PER COMMENTS BY BOCO

Novum Structures LLC
W126 N8585 Westbrook Crossing
Menomonee Falls, WI 53051 USA
T 262.255.5561
www.novumstructures.com
info@novumstructures.com

NOVUM

PROJECT:
NOVUM'S HURRICANE PSG
GLASS SYSTEM: HG01
VERTICAL WALL SYSTEM

DRAWING DESCRIPTION:
MOCK- UP #2
SECTION & DETAIL VIEWS

DRAWN BY: BTH	DATE: 02MAR10
CHECKED BY: SWK	APPROVED BY: SWK
SCALE: 3"=12"	PROJECT MANAGER: DB

PROJECT NUMBER: 25-183

SHEET NUMBER: MU511-1

23Jul2011 4:11 PM P:\PROJECTS\2005\25-183 MIC EARLINGTON HEIGHTS CONNECTOR\2103 DRAWINGS\AUTOCAD DWGS\NOA\MU511.DWG

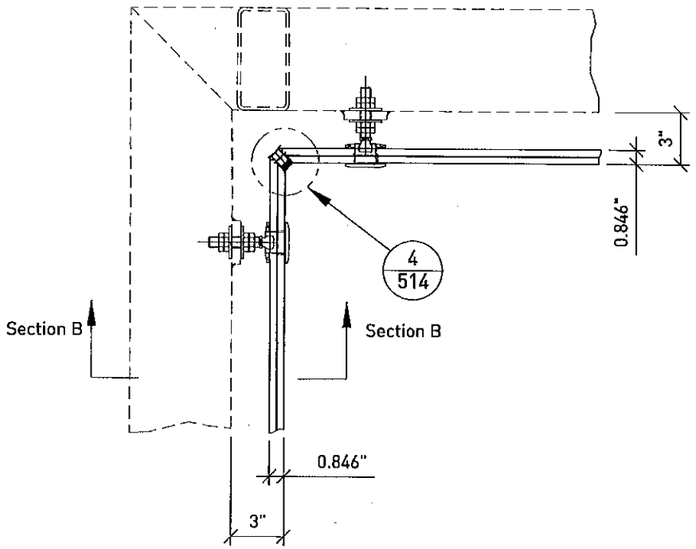

02 M210 M512 Plan View: Inside corner
Scale: 3"=12"

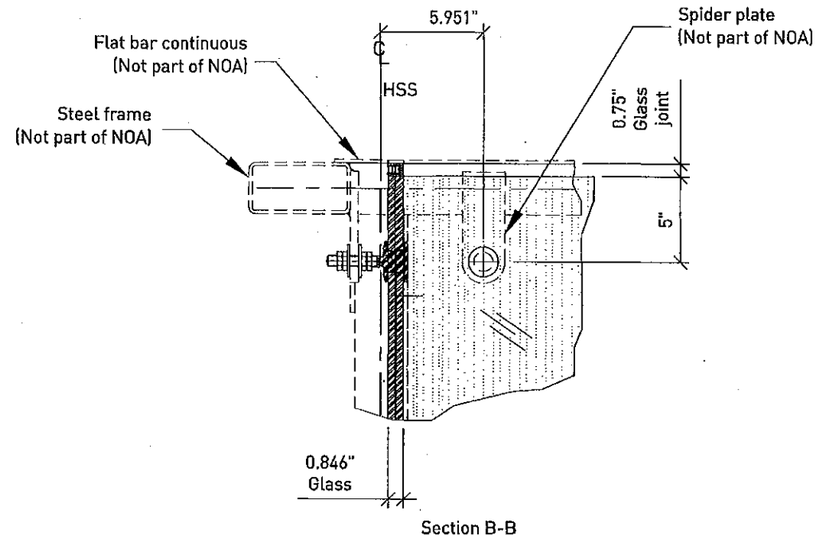

Section B-B

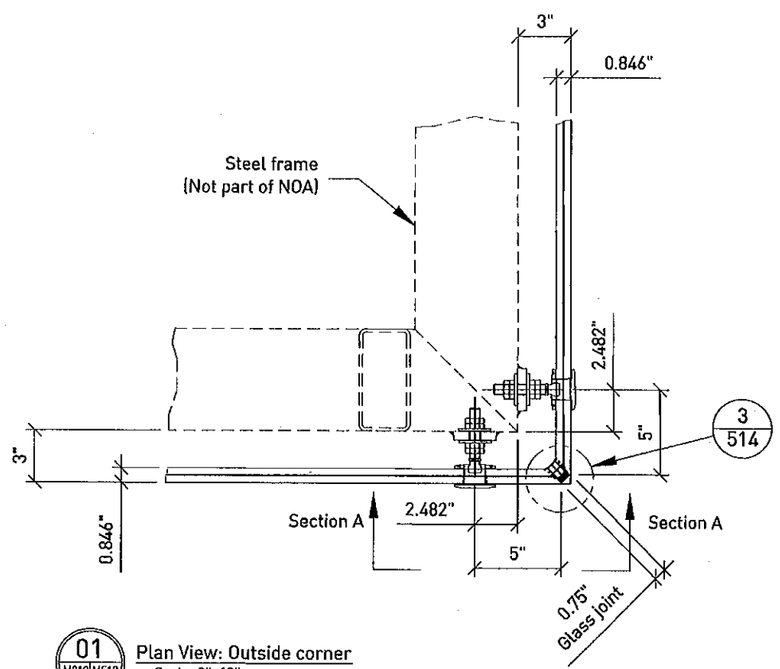

01 M210 M512 Plan View: Outside corner
Scale: 3"=12"

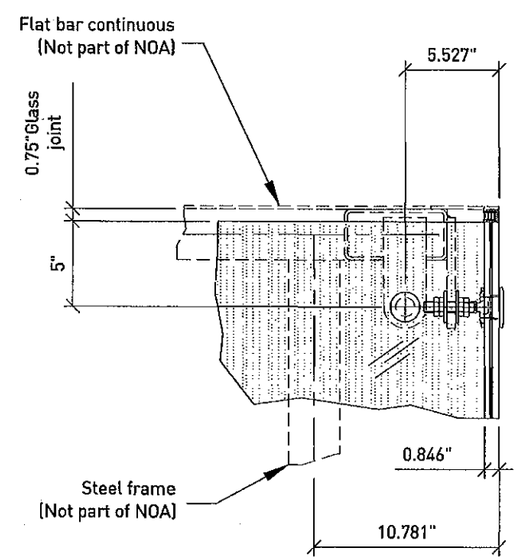

Section A-A

This NOA system pertains to the glass, rotule & sealant joints only (solid lines)

The support system (dashed lines) is not governed by this NOA except as follows:

Minimum thickness of support system to be 3/16" minimum & determined via appropriate stress checks according to AISC steel construction manual and/or other applicable codes (governed by material, local jurisdictions, etc...).

Deflection of support framing not to exceed L/160.

ETHAN A. CHARPENTIER
LICENSE
No. 65106
STATE OF FLORIDA
PROFESSIONAL ENGINEER
AUG 2 5 2011

Approved as complying with the Florida Building Code
Date 08/25/2011
NOA# 11-0412.06
Miami Dade Product Control
By

ALL RIGHTS RESERVED. THIS DRAWING OR ANY PART THEREOF MUST NOT BE REPRODUCED WITHOUT PERMISSION OF NOVUM STRUCTURES LLC.

Larson Engineering, Inc.
3524 Lehaco Road
White Bear Lake, MI 53110
(P) 631.481.8120 (F) 631.481.8201
Florida Firm No. F-02000005175
Certificate of Authorization #9803
Ethan A. Charpentier
Registration No. 65106

ENGINEER STAMP:

APPROVAL STAMP:

NOVUM STAMP:

REV.NO.	DATE	DWG.BY	CHK.BY
1	23JUL11	BTH	SWK

REVISED PER COMMENTS BY BCCO

Novum Structures LLC
W126 N8585 Westbrook Crossing
Menomonee Falls, WI 53051 USA
T 262.255.5561
www.novumstructures.com
info@novumstructures.com

NOVUM

PROJECT:
NOVUM'S HURRICANE PSG GLASS SYSTEM: HG01 VERTICAL WALL SYSTEM

DRAWING DESCRIPTION:
MOCK- UP #2
SECTION & DETAIL VIEWS

DRAWN BY: BTH	DATE: 02MAR10
CHECKED BY: SWK	APPROVED BY: SWK
SCALE: 3"=12"	PROJECT MANAGER: GB
PROJECT NUMBER: 25-183	
SHEET NUMBER: MU512-1	

28Jul2011 4:22 PM P:\PROJECTS\2005\25-183 MIC EARLINGTON HEIGHTS CONNECTOR\2103 DRAWINGS\AUTOCAD DWGS\NOA\MU512.DWG

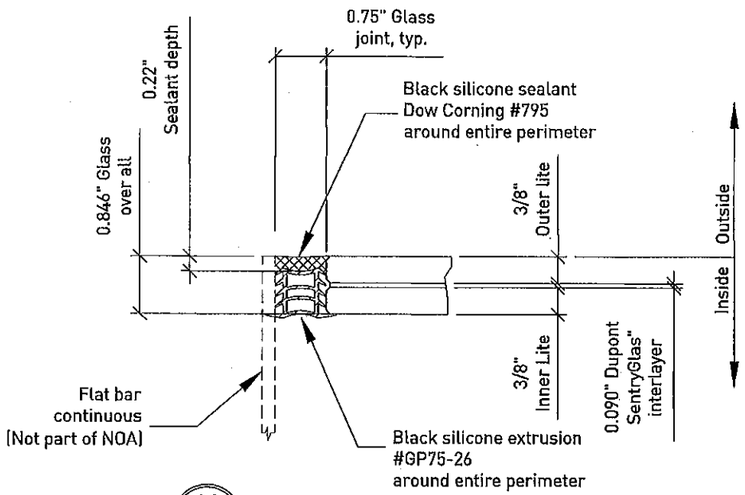

01 M510 M514 M511 Detail: Typical edge sealant joint
Scale: 6"=12"

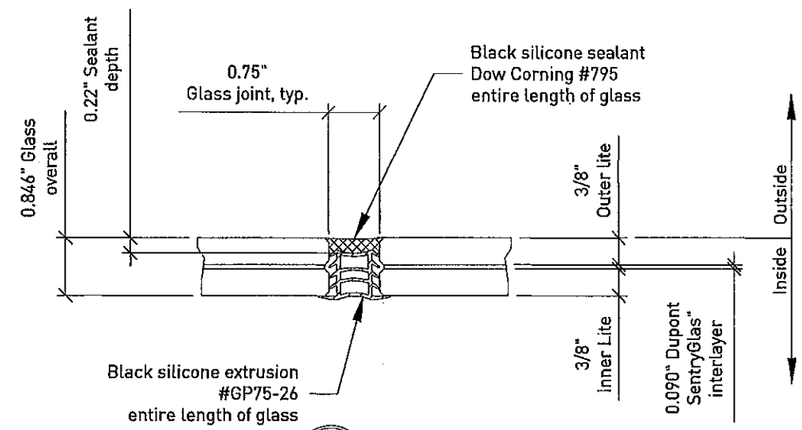

02 M210 M514 Detail: Typical interior sealant joint
Scale: 6"=12"

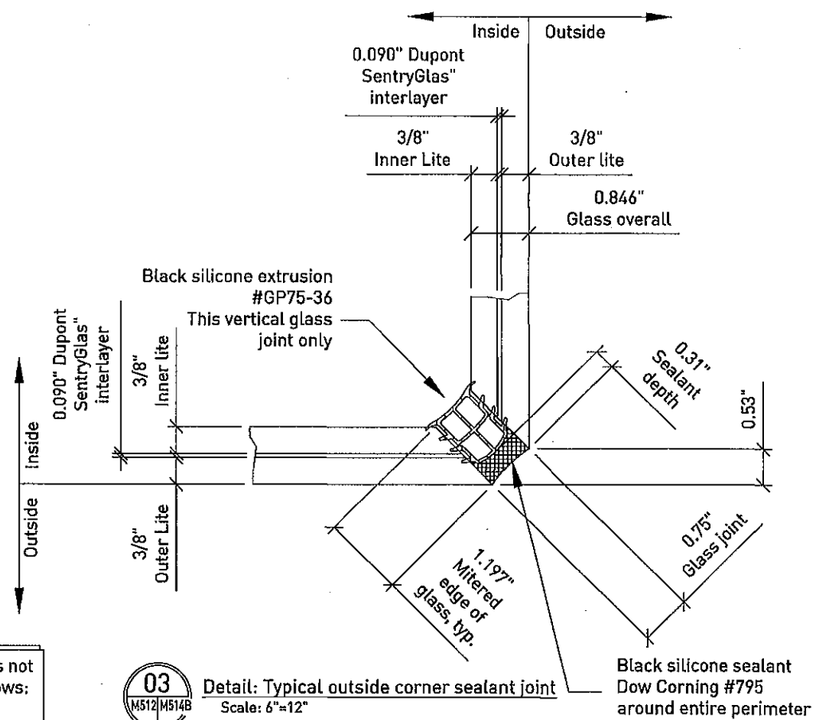

03 M512 M514B Detail: Typical outside corner sealant joint
Scale: 6"=12"

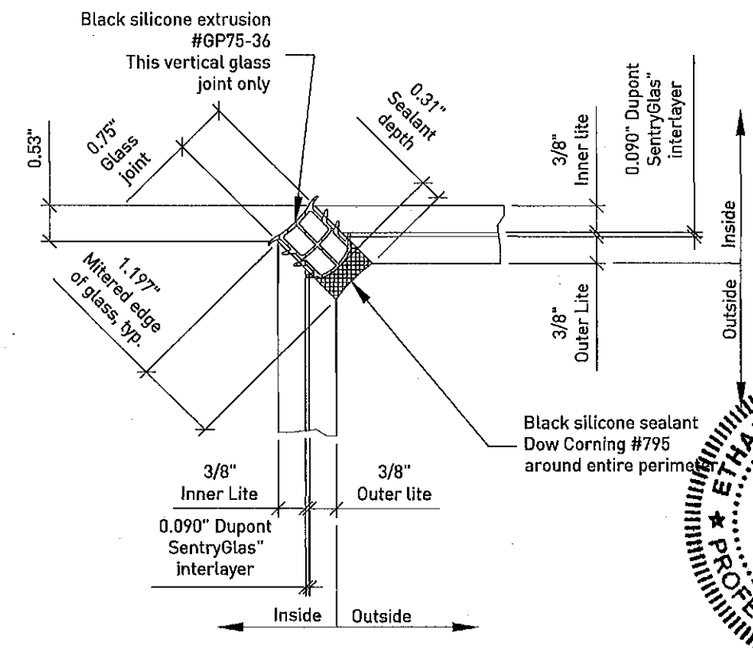

04 M512 M514 Detail: Typical inside corner sealant joint
Scale: 6"=12"

This NOA system pertains to the glass, rotule & sealant joints only (solid lines)

The support system (dashed lines) is not governed by this NOA except as follows:

Minimum thickness of support system to be 3/16" minimum & determined via appropriate stress checks according to AISC steel construction manual and/or other applicable codes (governed by material, local jurisdictions, etc...).

Deflection of support framing not to exceed L/160.

ETHAN A. CHARPENTIER LICENSE No. 65106 STATE OF FLORIDA PROFESSIONAL ENGINEER
AUG 2 5 2011

Approved as complying with the Florida Building Code
Date 08/25/2011
NOA# 11-0412.06
Miami Dade Product Control
By

ALL RIGHTS RESERVED. THIS DRAWING OR ANY PART THEREOF MUST NOT BE REPRODUCED WITHOUT PERMISSION OF NOVUM STRUCTURES LLC.

Larson Engineering, Inc.
3524 Lebanon Road
White Bear Lake, MN 55110
(P) 651.481.9120 (F) 651.481.9201
Florida Firm No. F-02000006125
Certificate of Authorization #9935
Ethan A. Charpentier
Registration No. 65106

ENGINEER STAMP:

APPROVAL STAMP:

NOVUM STAMP:

REV.NO.	DATE	DWG.BY	CHK.BY
1	23JUL11	BTH	SWK

REVISED PER COMMENTS BY BCCO

Novum Structures LLC
W126 N8585 Westbrook Crossing
Menomonee Falls, WI 53051 USA
T 262.255.5561
www.novumstructures.com
info@novumstructures.com

NOVUM

PROJECT:
NOVUM'S HURRICANE PSG GLASS SYSTEM:HG01 VERTICAL WALL SYSTEM

DRAWING DESCRIPTION:
MOCK-UP #2
GLASS JOINT DETAILS

DRAWN BY: BTH	DATE: 04MAR10
CHECKED BY: SWK	APPROVED BY: SWK
SCALE: FULL	PROJECT MANAGER: GB

PROJECT NUMBER: 25-183

SHEET NUMBER: MU514-1

24Aug2011 11:01 AM P:\PROJECTS\2005\25-183 MIC EARLINGTON HEIGHTS CONNECTOR\2103 DRAWINGS\AUTOCAD DWGS\NOA\MU514.DWG

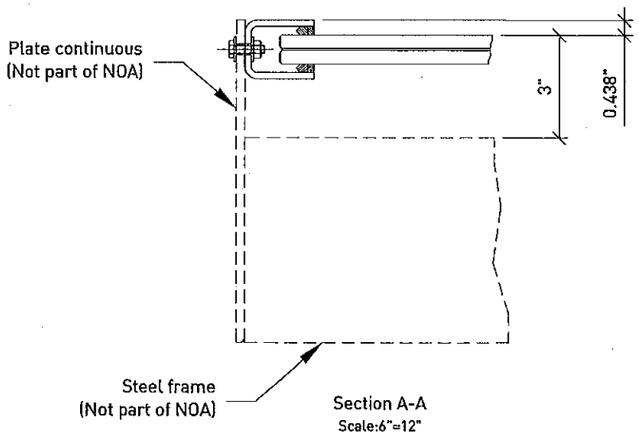

Section A-A
Scale:6"=12"

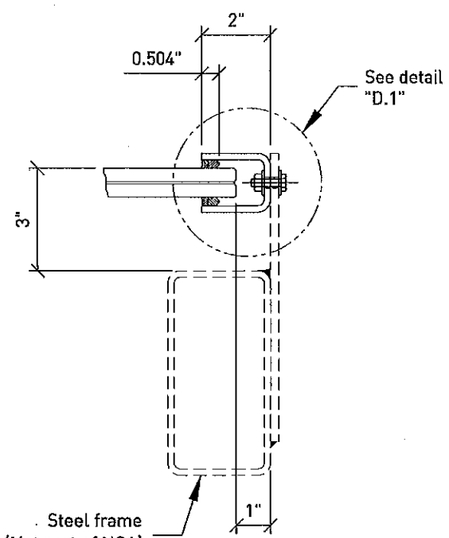

Section B_B
Scale:6"=12"

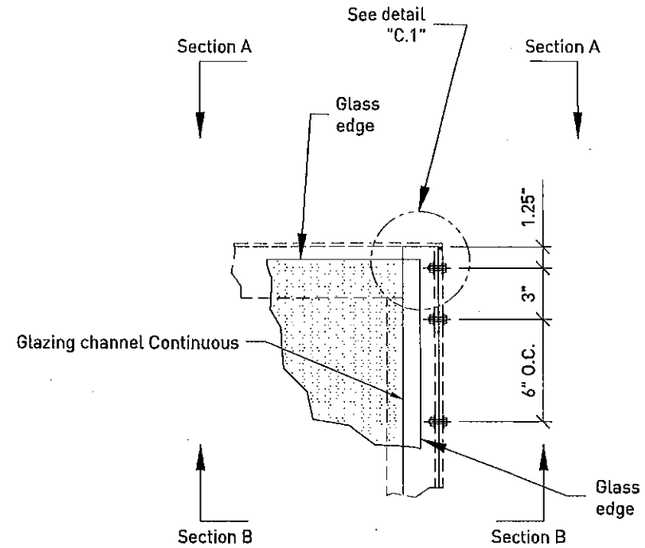

01 M210 M515 Detail: Typical corner glazing channel detail
Scale: 3"=12"

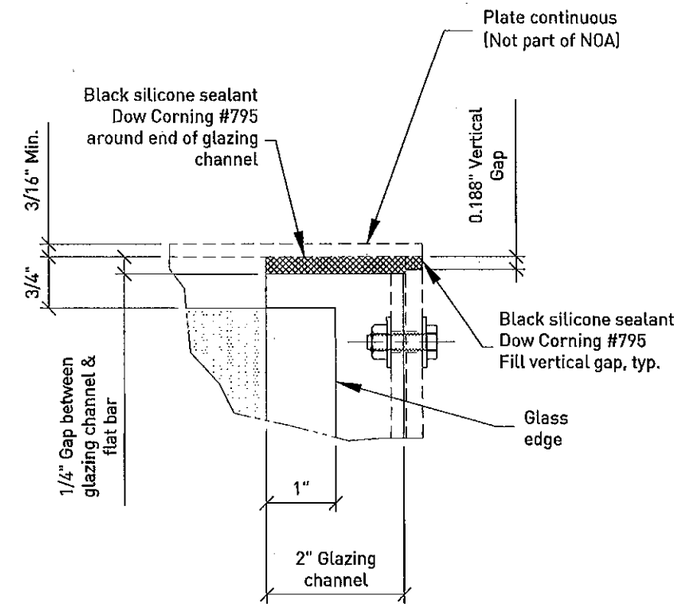

Detail "C.1"
Scale:12"=12"

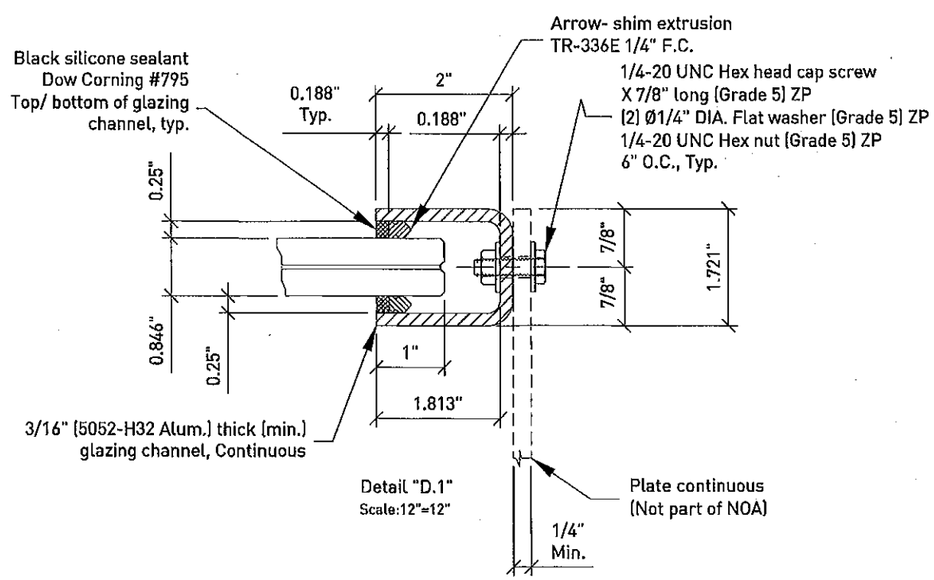

Detail "D.1"
Scale:12"=12"

This NOA system pertains to the glass, rotule, glazing channel & sealant joints only (solid lines)

The support system (dashed lines) is not governed by this NOA except as follows:

Minimum thickness of support system to be 3/16" minimum & determined via appropriate stress checks according to AISC steel construction manual and/or other applicable codes (governed by material, local jurisdictions, etc...).

Deflection of support framing not to exceed L/160.

ETHAN A. CHARPENTIER
LICENSE
No. 65106
STATE OF FLORIDA
PROFESSIONAL ENGINEER

AUG 2 5 2011

Approved as complying with the Florida Building Code
Date 08/25/2011
NOA# 11-0412.06
Miami Dade Product Control
By

ALL RIGHTS RESERVED. THIS DRAWING OR ANY PART THEREOF MUST NOT BE REPRODUCED WITHOUT PERMISSION OF NOVUM STRUCTURES LLC.

Larson Engineering, Inc.
3324 Labore Road
White Bear Lake, MN 55110
(P) 651.481.9100 (F) 651.481.9201

Florida Firm No. F-02000000175
Certificate of Authorization #9903
Ethan A. Charpentier
Registration No. 65106
ENGINEER STAMP

APPROVAL STAMP

NOVUM STAMP

REV.NO.	DATE	DWN.BY	CHK.BY
1	23JUL.11	BTH	SWK

REVISED PER COMMENTS BY BCCO

Novum Structures LLC
W126 N8585 Westbrook Crossing
Menomonee Falls, WI 53051 USA
T 262.255.5561
www.novumstructures.com
info@novumstructures.com

NOVUM

PROJECT:
NOVUM'S HURRICANE PSG
GLASS SYSTEM: HG01
VERTICAL WALL SYSTEM

DRAWING DESCRIPTION:
MOCK- UP #2
SECTION & DETAIL VIEWS

DRAWN BY	DATE
BTH	02MAR10
CHECKED BY: SWK	APPROVED BY: SWK
SCALE: 3"=12"	PROJECT MANAGER: GB

PROJECT NUMBER:
25-183

SHEET NUMBER:
MU515-1

24Aug2011 11:02 AM P:\PROJECTS\2005\25-183 MIC EARLINGTON HEIGHTS CONNECTOR\2103 DRAWINGS\AUTOCAD DWGS\NOA\MU515.DWG

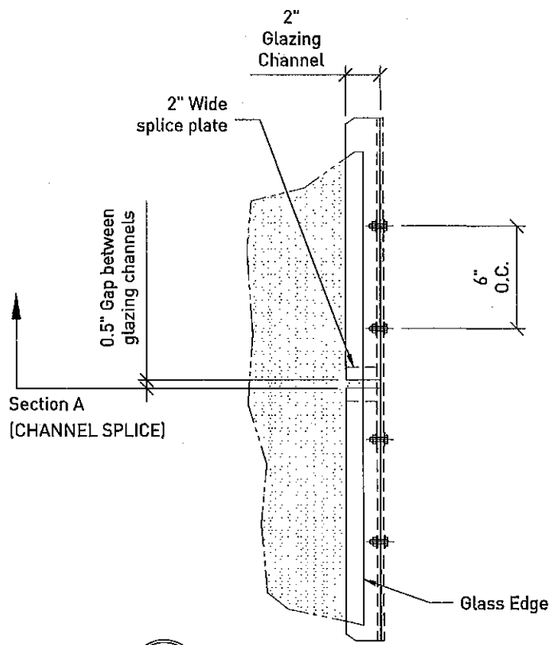

01 M210 M516 Detail: Glazing channel splice detail
Scale: 3"=12"

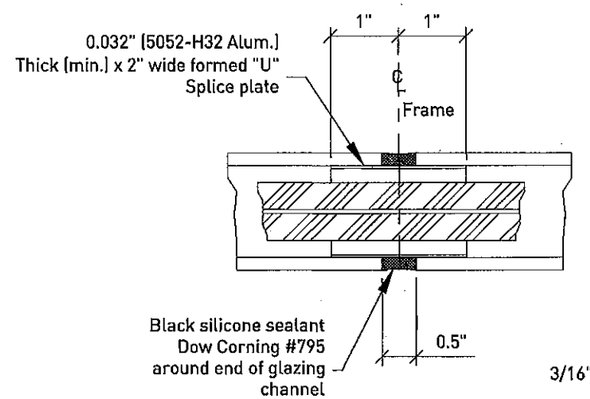

Section B-B
Scale:12"=12"

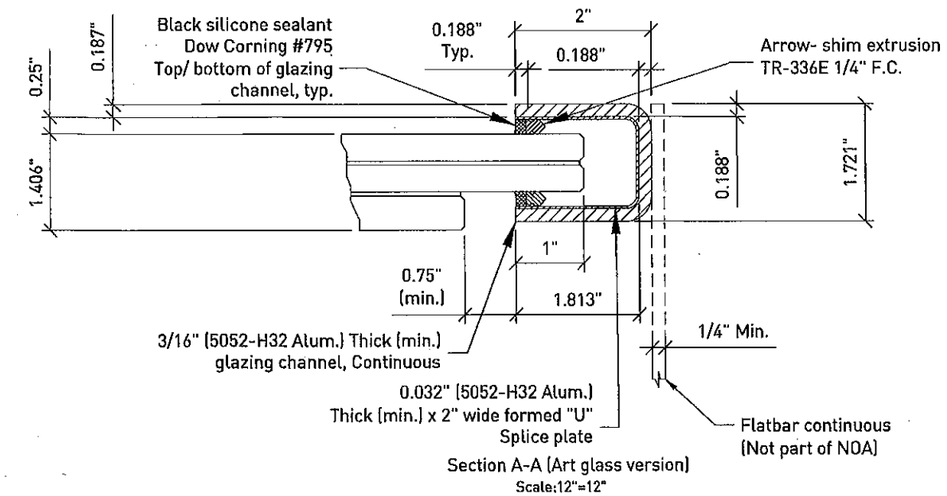

Section A-A (Art glass version)
Scale:12"=12"

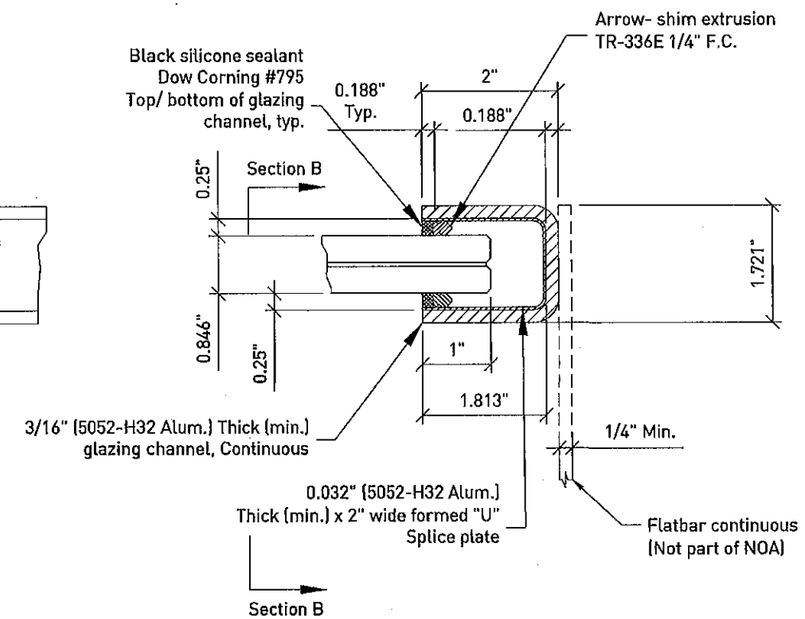

Section A-A
Scale:12"=12"

This NOA system pertains to the glass, rotule, glazing channel & sealant joints only (solid lines)

The support system (dashed lines) is not governed by this NOA except as follows:

Minimum thickness of support system to be 3/16" minimum & determined via appropriate stress checks according to AISC steel construction manual and/or other applicable codes (governed by material, local jurisdictions, etc...).

Deflection of support framing not to exceed L/160.

ETHAN A. CHARPENTIER
LICENSE
No. 65106
STATE OF FLORIDA
PROFESSIONAL ENGINEER

AUG 2 5 2011

Approved as complying with the Florida Building Code
Date 08/25/2011
NOA# 11-0412.06
Miami Dade Product Control
By

ALL RIGHTS RESERVED. THIS DRAWING OR ANY PART THEREOF MUST NOT BE REPRODUCED WITHOUT PERMISSION OF NOVUM STRUCTURES LLC.

Larson Engineering, Inc.
3516 Labore Road
White Bear Lake, MN 55110
(P) 651.481.9120 (F) 651.481.9201

Florida Firm No. F-03090003176
Certificate of Authorization #6803
Ethan A. Charpentier
Registration No. 65106

ENGINEER STAMP:

APPROVAL STAMP:

NOVUM STAMP:

REV.NO.	DATE	DWG.BY	CHK.BY
1	23JUL11	BTH	SWK
REVISED PER COMMENTS BY BCCO			

Novum Structures LLC
W126 N8585 Westbrook Crossing
Menomonee Falls, WI 53051 USA
T 262.255.5561
www.novumstructures.com
info@novumstructures.com

NOVUM

PROJECT:
NOVUM'S HURRICANE PSG
GLASS SYSTEM: HG01
VERTICAL WALL SYSTEM

DRAWING DESCRIPTION:
MOCK- UP #2
SECTION & DETAIL VIEWS

DRAWN BY: BTH	DATE: 02MAR10
CHECKED BY: SWK	APPROVED BY: SWK
SCALE: 3"=12"	PROJECT MANAGER: GB

PROJECT NUMBER: 25-183

SHEET NUMBER: MU516-1

24Aug2011 11:08 AM P:\PROJECTS\2005\25-183 MIC EARLINGTON HEIGHTS CONNECTOR\2103 DRAWINGS\AUTOCAD DWGS\NOA\MU516.DWG

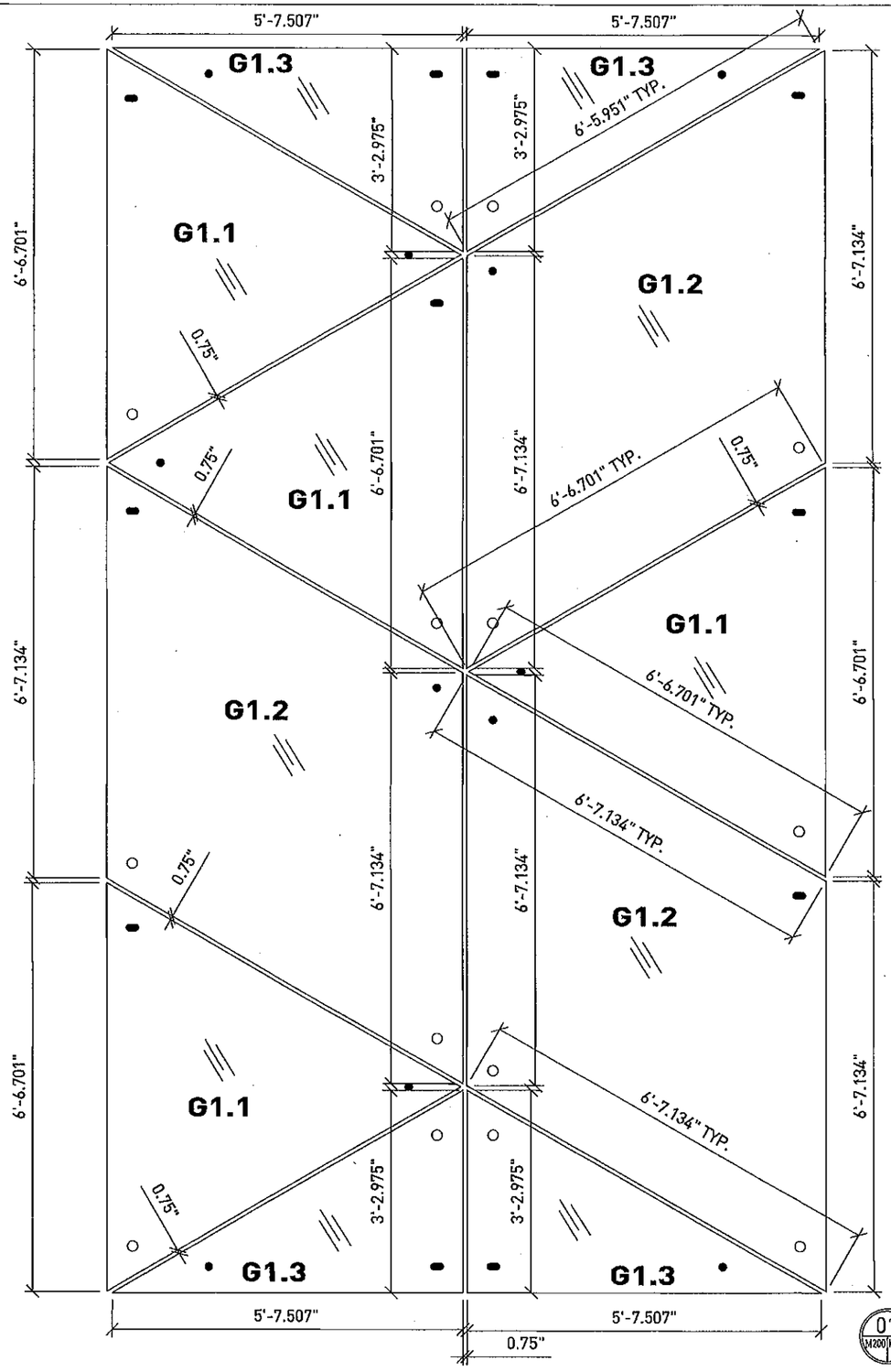

01 M200 M700 Glass layout and dimensions
Scale: 1"=12"

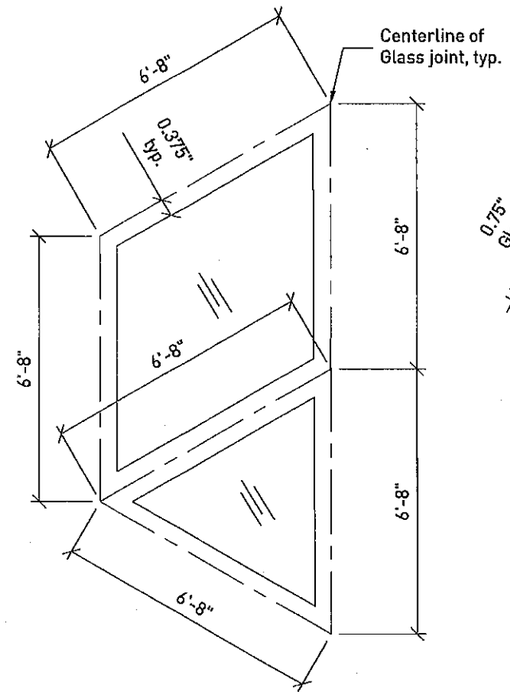

Detail: Basis of glass layout

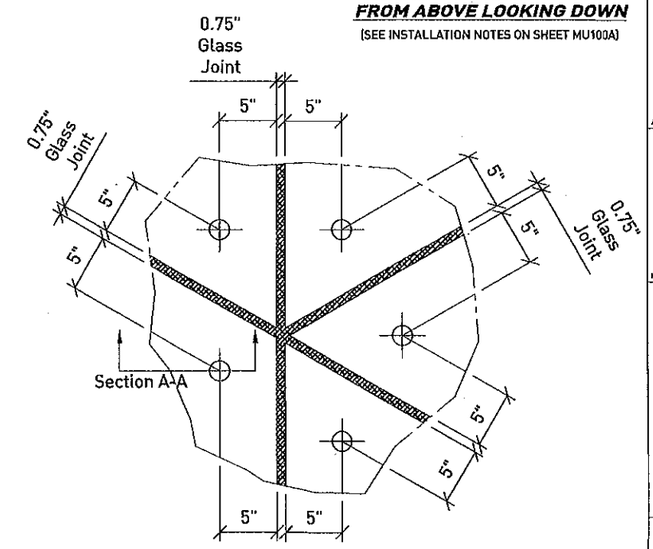

Detail: Basis of Center of Hole to edge of glass

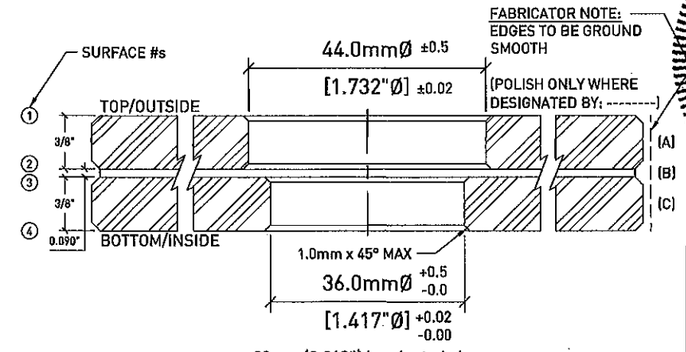

22mm (0.813") Laminated glass

Section A-A

SYMBOL KEY

- SLOTTED HOLE IN SPIDER
- OVERSIZED HOLE IN SPIDER
- FIXED HOLE IN SPIDER

X-AXIS MOVEMENT ONLY

FIXED NO MOVEMENT ALLOWED

X-AXIS AND Y-AXIS MOVEMENT ALLOWED

X-AXIS AND Y-AXIS MOVEMENT ALLOWED

VIEW OF ONE GLASS PANE FROM ABOVE LOOKING DOWN

(SEE INSTALLATION NOTES ON SHEET MU100A)

ETHAN A. CHARPENTIER
LICENSE
No. 65106
STATE OF FLORIDA
PROFESSIONAL ENGINEER

AUG 25 2011

Approved as complying with the Florida Building Code
Date 08/25/2011
NOA# 11-0412.06
Miami Dade Product Control
By

ALL RIGHTS RESERVED. THIS DRAWING OR ANY PART THEREOF MUST NOT BE REPRODUCED WITHOUT PERMISSION OF NOVUM STRUCTURES LLC.

Larson Engineering, Inc.
3524 Sabore Road
White Bear Lake, MN 55110
(P) 651.481.9120 (F) 651.481.9201

Florida Firm No. F-03000005178
Certificate of Authorization #9863
Ethan A. Charpentier
Registration No. 65106
ENGINEER STAMP:

APPROVAL STAMP:

NOVUM STAMP:

REV.NO.	DATE	DWG.BY	CHK.BY
1	23JUL11	BTH	SWK

REVISED PER COMMENTS BY BCCO

Novum Structures LLC
W126 N8585 Westbrook Crossing
Menomonee Falls, WI 53051 USA
T 262.255.5561
www.novumstructures.com
info@novumstructures.com

NOVUM

PROJECT:
NOVUM 'S HURRICANE PSG
GLASS SYSTEM: HG01
VERTICAL WALL SYSTEM

DRAWING DESCRIPTION:
MOCK-UP #1
GLASS LAYOUT & DIMENSIONS

DRAWN BY: BTH	DATE: 02MAR10
CHECKED BY: SWK	APPROVED BY: SWK
SCALE: 1"=12"	PROJECT MANAGER: GB

PROJECT NUMBER: 25-183

SHEET NUMBER: MU700-1

28Jul2011 4:42 PM P:\PROJECTS\2005\25-183 MIC EARLINGTON HEIGHTS CONNECTOR\2103 DRAWINGS\AUTOCAD DWGS\NOA\MU700.DWG

ALL RIGHTS RESERVED. THIS DRAWING OR ANY PART THEREOF MUST NOT BE REPRODUCED WITHOUT PERMISSION OF NOVUM STRUCTURES LLC.

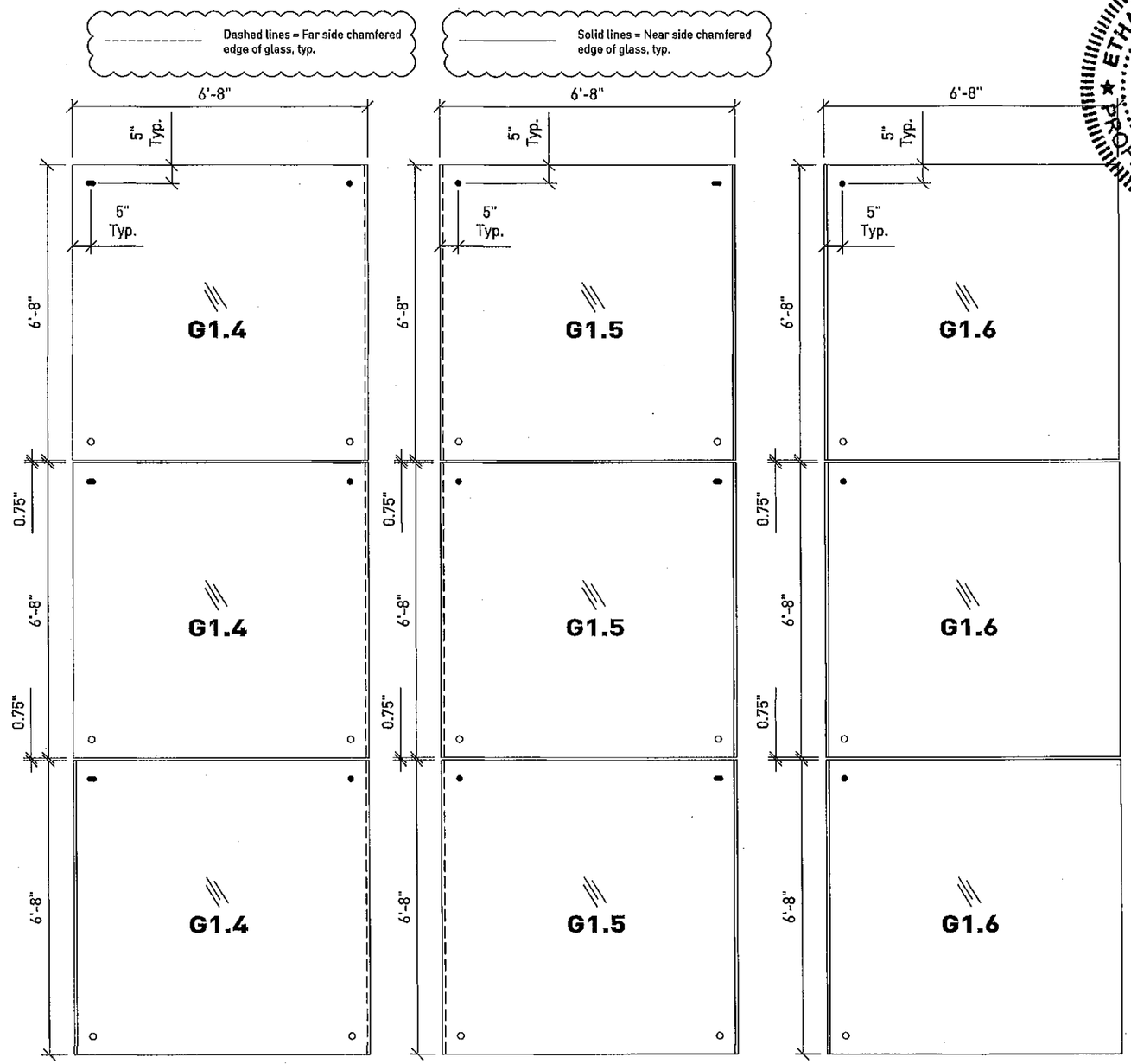

01 M710 | M710 Glass layout and dimensions
Scale: 3/4"=12"

ETHAN A. CHARPENTIER
LICENSE
No. 65106
STATE OF FLORIDA
PROFESSIONAL ENGINEER
AUG 25 2011

SYMBOL KEY

- SLOTTED HOLE IN SPIDER
- OVERSIZED HOLE IN SPIDER
- FIXED HOLE IN SPIDER

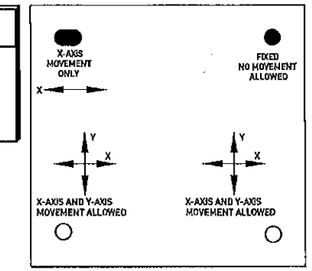

VIEW OF ONE GLASS PANE FROM ABOVE LOOKING DOWN

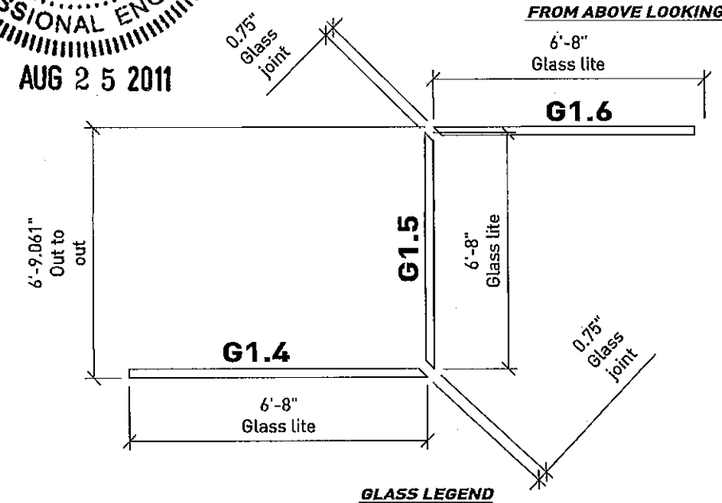

GLASS LEGEND FROM ABOVE LOOKING DOWN

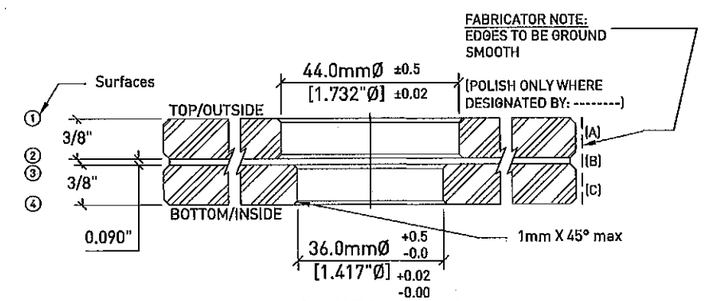

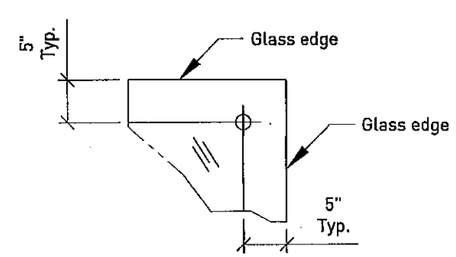

Detail: Basis of Center of Hole to edge of glass

Approved as complying with the Florida Building Code
Date 08/25/2011
NOA# 11-0412.06
Miami Dade Product Control
By

Larson Engineering, Inc.
3444 Lebore Road
Mobile Bear Lake, WI 54110
(P) 651.481.8190 (F) 651.481.8201
Florida Firm No. F-02000005173
Certificate of Authorization #9803
Ethan A. Charpentier
Registration No. 65106

ENGINEER STAMP

APPROVAL STAMP

NOVUM STAMP

REV.NO.	DATE	DWG.BY	CHK.BY
1	23JUL11	BTH	SWK

REVISED PER COMMENTS BY BCCO

Novum Structures LLC
W126 N8585 Westbrook Crossing
Menomonee Falls, WI 53051 USA
T 262.255.6561
www.novumstructures.com
info@novumstructures.com

NOVUM

PROJECT:
NOVUM'S HURRICANE PSG
GLASS SYSTEM: HG01
VERTICAL WALL SYSTEM

DRAWING DESCRIPTION:
MOCK- UP #2
GLASS LAYOUT & DIMENSIONS

DRAWN BY:	DATE:
BTH	02MAR10
CHECKED BY: SWK	APPROVED BY: SWK
SCALE: 3/4"=12"	PROJECT MANAGER: GB

PROJECT NUMBER: 25-183

SHEET NUMBER: MU710-1

28JUL2011 4:45 PM P:\PROJECTS\2005\25-183 MIC EARLINGTON HEIGHTS CONNECTOR\2103 DRAWINGS\AUTOCAD DWGS\NOAMU710.DWG

GLASS SPECIFICATION:
(A:) 3/8" CLEAR OUTER LITE - FULLY TEMPERED
(B:) 0.090" 1-PLY CLEAR DuPont SentryGlas Interlayer by E.I. DuPont DeNemours & Co., Inc.
(C:) 3/8" CLEAR INNER LITE - FULLY TEMPERED
ALL GLASS PANELS WITH CHAMFERED AND GROUND EDGES AND (3) THREE OR (4) FOUR DRILLED HOLES

TOLERANCES:
±1.5mm (±0.06") FOR WIDTH AND LENGTH FOR GLASS DIMENSIONS LESS THAN 1500mm (59")
±2.0mm (±0.08") FOR WIDTH AND LENGTH FOR GLASS DIMENSIONS BETWEEN 1500mm (59") AND 3000mm (118")
±2.0mm (±0.08") FOR DIAGONALS FOR GLASS DIMENSIONS LESS THAN 1500mm (59")
±3.0mm (±0.12") FOR DIAGONALS FOR GLASS DIMENSIONS BETWEEN 1500mm (59") AND 3000mm (118")
TOTAL LAMINATED GLASS THICKNESS: ±0.5mm (±0.02")
LAMINATION ALIGNMENT: ±1.5mm (±0.06")
LOCATION OF HOLES: ±2.0mm (±0.08")
(INCLUSIVE OF ALL OTHER LAMINATION AND DIMENSIONAL TOLERANCES)
REFER TO NOVUM MANUFACTURING SPECIFICATION NS105 FOR
TOLERANCE AND MANUFACTURING REQUIREMENTS

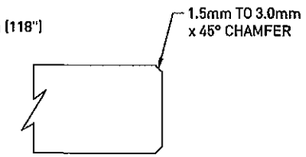

EDGE DETAIL

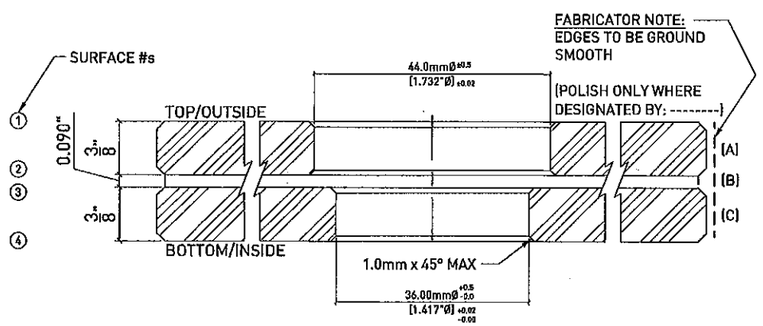

21.5mm (0.846") LAMINATED GLASS

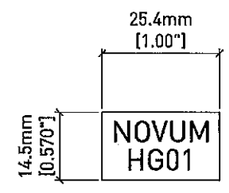

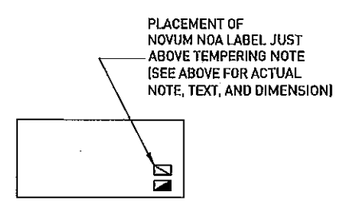

GLASS PANELS SEEN FROM ABOVE/ OUTSIDE

NOTE: PLEASE MAKE SURE PLACEMENT OF TEMPERING NOTE SHALL BE VISIBLE AND WILL NOT INTERFERE WITH THE LAMINATION PROCESS

SEE EACH GLASS FABRICATION DRAWING
FOR ACTUAL ORIENTATION OF ROLLER WAVE

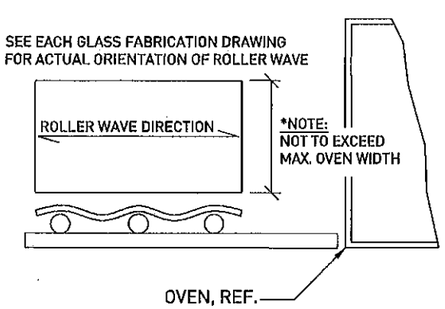

ETHAN A. CHARPENTIER
LICENSE
No. 65106
STATE OF
FLORIDA
PROFESSIONAL ENGINEER

AUG 2 5 2011

Approved as complying with the
Florida Building Code
Date 08/26/2011
NOA# 11-0412.06
Miami Dade Product Control
By

ALL RIGHTS RESERVED. THIS DRAWING OR ANY PART THEREOF MUST NOT BE REPRODUCED WITHOUT PERMISSION OF NOVUM STRUCTURES LLC.

Larson Engineering, Inc.
3524 Labeau Road
Mille Lacs, MN 55110
(P) 651.681.5120 (F) 651.681.6301

Florida Firm No. F-02000005175
Certificate of Authorization #3803
Ethan A. Charpentier
Registration No. 65106
ENGINEER STAMP:

APPROVAL STAMP:

NOVUM STAMP:

REV.NO.	DATE	DWG.BY	CHK.BY
1	22JUL11	BTH	SWK
REVISED PER COMMENTS BY BCCO			

Novum Structures LLC
W126 N8585 Westbrook Crossing
Menomonee Falls, WI 53051 USA
T 262.255.5561
www.novumstructures.com
info@novumstructures.com

NOVUM

PROJECT:
NOVUM'S HURRICANE PSG
GLASS SYSTEM: HG01
VERTICAL WALL SYSTEM

DRAWING DESCRIPTION:
GLASS MAKE- UP SHEET

DRAWN BY: BTH	DATE: 22JUL11
ENGINEER BY: SWK	APPROVED BY: SWK
SCALE: NONE	PROJECT MANAGER: GB

PROJECT NUMBER:
25-183

SHEET NUMBER:
MU800-1

17Aug2011 4:58 PM P:\PROJECTS\2005\25-183 MIC EARLINGTON HEIGHTS CONNECTOR\2103 DRAWINGS\AUTOCAD DWGS\NOA\MU800.DWG

GLASS SPECIFICATION:
(A:) 3/8" CLEAR OUTER LITE - FULLY TEMPERED
(B:) 0.090" 1-PLY CLEAR DuPont SentryGlas Interlayer by E.I. DuPont DeNemours & Co., Inc.
(C:) 3/8" CLEAR INNER LITE - FULLY TEMPERED
(D:) 0.060" 1-PLY CLEAR DuPont SentryGlas Interlayer by E.I. DuPont DeNemours & Co., Inc.
(E:) 1/2" CLEAR INNER LITE - FULLY TEMPERED
ALL GLASS PANELS WITH CHAMFERED AND GROUND EDGES AND (3) THREE OR (4) FOUR DRILLED HOLES

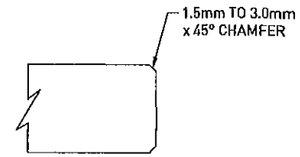

EDGE DETAIL

TOLERANCES:
±1.5mm (±0.06") FOR WIDTH AND LENGTH FOR GLASS DIMENSIONS LESS THAN 1500mm (59")
±2.0mm (±0.08") FOR WIDTH AND LENGTH FOR GLASS DIMENSIONS BETWEEN 1500mm (59") AND 3000mm (118")
±2.0mm (±0.08") FOR DIAGONALS FOR GLASS DIMENSIONS LESS THAN 1500mm (59")
±3.0mm (±0.12") FOR DIAGONALS FOR GLASS DIMENSIONS BETWEEN 1500mm (59") AND 3000mm (118")
TOTAL LAMINATED GLASS THICKNESS: ±0.5mm (±0.02")
LAMINATION ALIGNMENT: ±1.5mm (±0.06")
LOCATION OF HOLES: ±2.0mm (±0.08")
(INCLUSIVE OF ALL OTHER LAMINATION AND DIMENSIONAL TOLERANCES)
REFER TO NOVUM MANUFACTURING SPECIFICATION NS105 FOR
TOLERANCE AND MANUFACTURING REQUIREMENTS

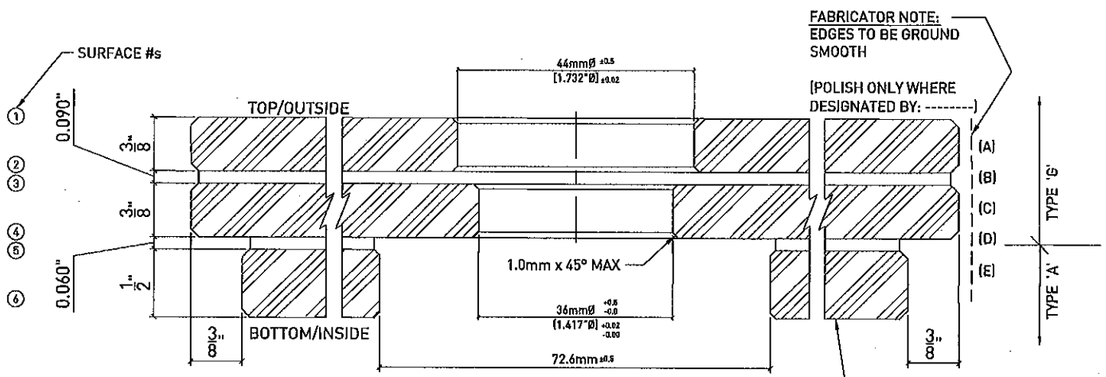

35.7mm [1.4"] LAMINATED GLASS

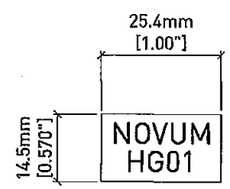

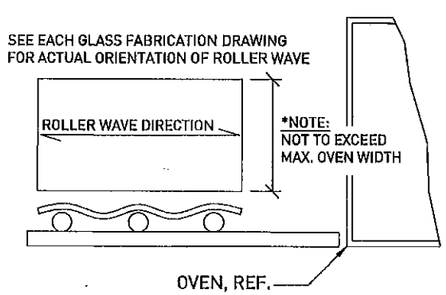

* MAXIMUM OVEN WIDTHS:
FOR LAMINATED AND TEMPERED = 1680mm
FOR MONOLITHIC TEMPERED AND TEMPERED IGU WITHOUT LAMINATION = 2420mm
GLASS WIDTHS SHOULD REMAIN BELOW 1.65m AND 2.35m RESPECTIVELY

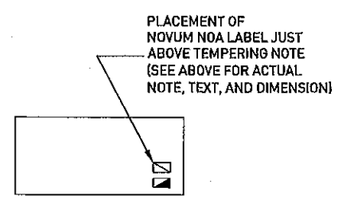

GLASS PANELS SEEN FROM ABOVE/ OUTSIDE

NOTE: PLEASE MAKE SURE PLACEMENT OF TEMPERING NOTE SHALL BE VISIBLE AND WILL NOT INTERFERE WITH THE LAMINATION PROCESS

ETHAN A. CHARPENTIER
LICENSE
No. 65106
STATE OF FLORIDA
PROFESSIONAL ENGINEER
AUG 25 2011

Approved as complying with the
Florida Building Code
Date 08/25/2011
NOA# 11-0412.06
Miami Dade Product Control
By

ALL RIGHTS RESERVED. THIS DRAWING OR ANY PART THEREOF MUST NOT BE REPRODUCED WITHOUT PERMISSION OF NOVUM STRUCTURES LLC.

Larson Engineering, Inc.
3524 Labore Road
White Bear Lake, MN 55110
(P) 651.481.9120 (F) 651.481.9201

Florida Firm No. F-02000065178
Certificate of Authorization #3903
Ethan A. Charpentier
Registration No. 65106
ENGINEER STAMPS

APPROVAL STAMPS

NOVUM STAMPS

REV.NO.	DATE	DWG.BY	CHK.BY
1	22JUL11	BTH	SWK
REVISED PER COMMENTS BY BCCO			

Novum Structures LLC
W126 N8585 Westbrook Crossing
Menomonee Falls, WI 53051 USA
T 262.255.5561
www.novumstructures.com
info@novumstructures.com

NOVUM

PROJECT:
NOVUM'S HURRICANE PSG
GLASS SYSTEM: HG01
VERTICAL WALL SYSTEM

DRAWING DESCRIPTION:
GLASS MAKE- UP SHEET

DRAWN BY:	DATE:
BTH	22JUL11
CHECKED BY: SWK	APPROVED BY: SWK
SCALE: NONE	PROJECT MANAGER: GB

PROJECT NUMBER:
25-183

DRAWING NUMBER:
MU801-1

24Aug2011 11:11 AM P:\PROJECTS\2005\25-183 MIC EARLINGTON HEIGHTS CONNECTOR\2103 DRAWINGS\AUTOCAD DWGS\NOA\MU801.DWG

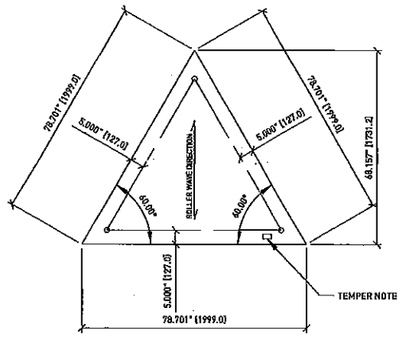

QUANTITY REQ'D= 4

GLASS PANELS SEEN FROM ABOVE/OUTSIDE.
REF. SHEET MU800 FOR GLASS MAKE-UP
AND HOLE DETAILS

G1.1

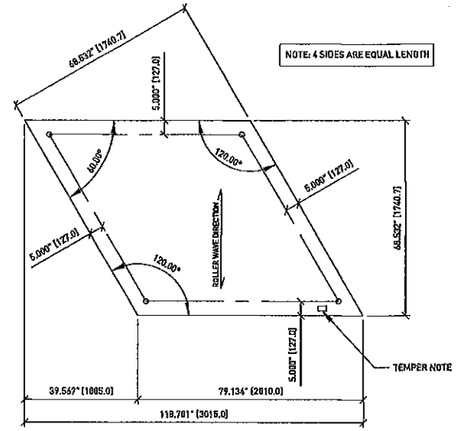

QUANTITY REQ'D= 3

GLASS PANELS SEEN FROM ABOVE/OUTSIDE.
REF. SHEET MU800 FOR GLASS MAKE-UP
AND HOLE DETAILS

G1.2

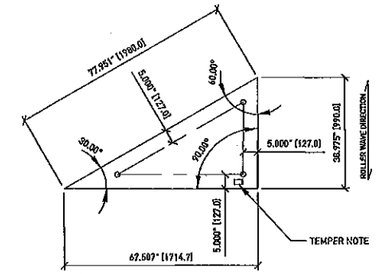

QUANTITY REQ'D= 4

GLASS PANELS SEEN FROM ABOVE/OUTSIDE.
REF. SHEET MU800 FOR GLASS MAKE-UP
AND HOLE DETAILS

G1.3

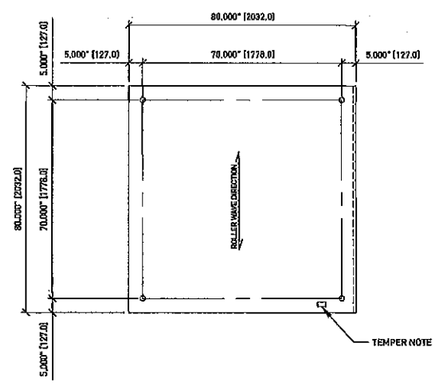

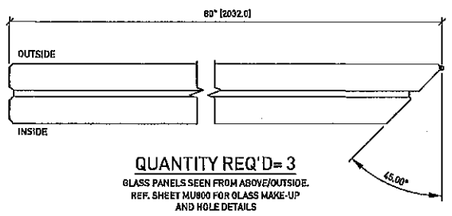

QUANTITY REQ'D= 3

GLASS PANELS SEEN FROM ABOVE/OUTSIDE.
REF. SHEET MU800 FOR GLASS MAKE-UP
AND HOLE DETAILS

G1.4

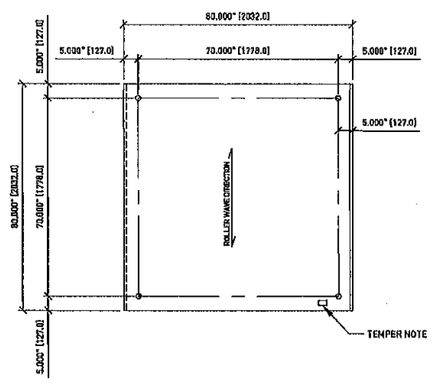

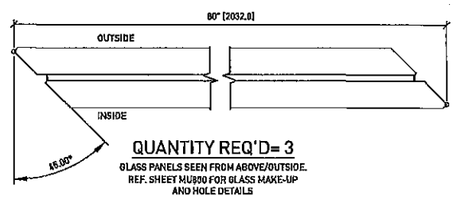

QUANTITY REQ'D= 3

GLASS PANELS SEEN FROM ABOVE/OUTSIDE.
REF. SHEET MU800 FOR GLASS MAKE-UP
AND HOLE DETAILS

G1.5

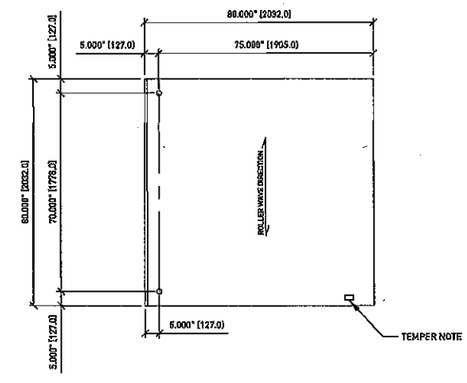

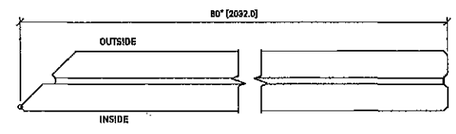

QUANTITY REQ'D= 3

GLASS PANELS SEEN FROM ABOVE/OUTSIDE.
REF. SHEET MU800 FOR GLASS MAKE-UP
AND HOLE DETAILS

G1.6

ETHAN A. CHARPENTIER
LICENSE
No. 65106
STATE OF FLORIDA
PROFESSIONAL ENGINEER

AUG 2 5 2011

Approved as complying with the
Florida Building Code
Date 08/25/2011
NOA# 11-0412.06
Miami Dade Product Control
By

ALL RIGHTS RESERVED. THIS DRAWING OR ANY PART THEREOF MUST NOT BE REPRODUCED WITHOUT PERMISSION OF NOVUM STRUCTURES LLC.

Larson Engineering, Inc.
3024 Lakers Road
White Bear Lake, MN 55110
(P) 651.481.9130 (F) 651.481.9391

Florida Firm No. F-02000065175
Certificate of Authorization [3003]
Ethan A. Charpentier
Registration No. 65106

REVISIONS STAMP

APPROVAL STAMP

NOVUM STAMP

REV.NO.	DATE	DWN.BY	CHK.BY
1	22JUL11	BTH	SWK

REVISED PER COMMENTS BY GCCO

Novum Structures LLC
W126 N8685 Westbrook Crossing
Menomonee Falls, WI 53051 USA
T 262.255.5561
www.novumstructures.com
info@novumstructures.com

NOVUM

PROJECT:
NOVUM'S HURRICANE PSG
GLASS SYSTEM: HG01
VERTICAL WALL SYSTEM

DRAWING DESCRIPTION:
GLAS DETAILS
NON- ART GLASS

DRAWN BY: BTH	DATE: 22JUL11
CHECKED BY: SWK	APPROVED BY: SWK
SCALE: NONE	PROJECT MANAGER: GB

PROJECT NUMBER:
25-183

SHEET NUMBER:
MU802-1

17Aug2011 4:59 PM P:\PROJECTS\2005\25-183 MIC EARLINGTON HEIGHTS CONNECTOR\2103 DRAWINGS\AUTOCAD DWGS\NOA\MU802.DWG

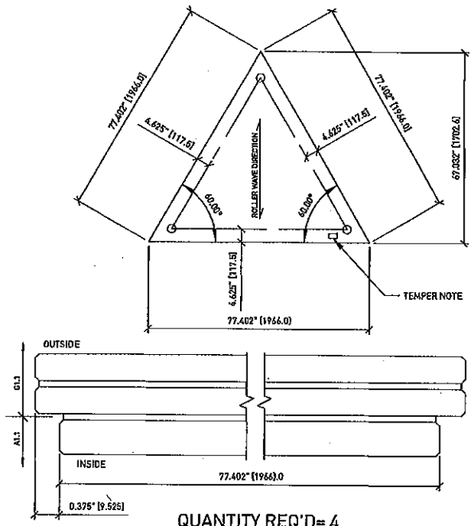

NOTE: HOLD THIS DIMENSION ON ALL SIDES - MEASURED PERPENDICULAR TO GLASS EDGE

QUANTITY REQ'D= 4

GLASS PANELS SEEN FROM ABOVE/OUTSIDE. REF. SHEET MU801 FOR GLASS MAKE-UP AND HOLE DETAILS

G2.1

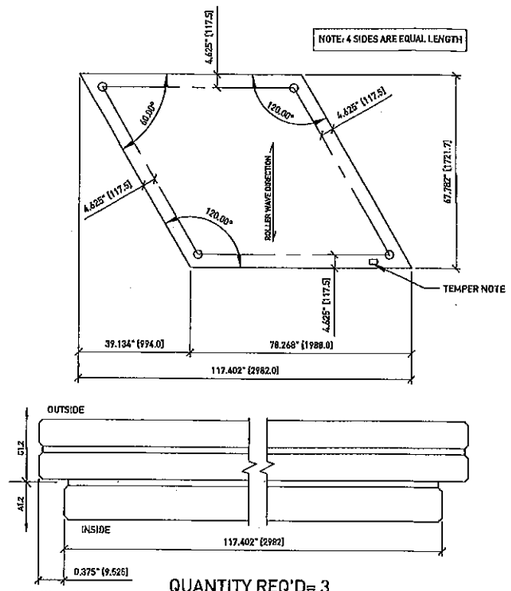

NOTE: HOLD THIS DIMENSION ON ALL SIDES - MEASURED PERPENDICULAR TO GLASS EDGE

QUANTITY REQ'D= 3

GLASS PANELS SEEN FROM ABOVE/OUTSIDE. REF. SHEET MU801 FOR GLASS MAKE-UP AND HOLE DETAILS

G2.2

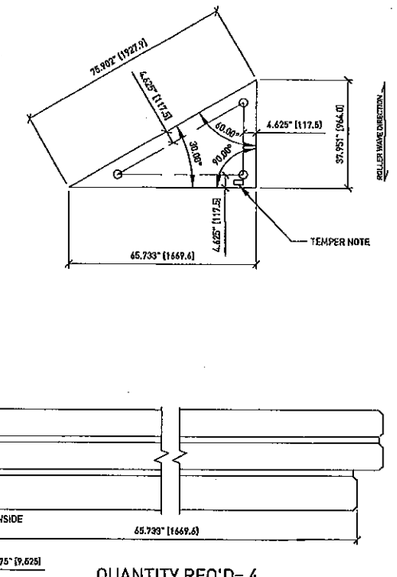

NOTE: HOLD THIS DIMENSION ON ALL SIDES - MEASURED PERPENDICULAR TO GLASS EDGE

QUANTITY REQ'D= 4

GLASS PANELS SEEN FROM ABOVE/OUTSIDE. REF. SHEET MU801 FOR GLASS MAKE-UP AND HOLE DETAILS

G2.3

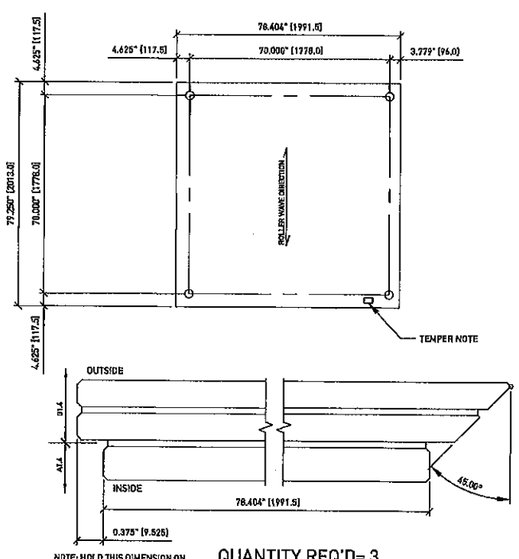

NOTE: HOLD THIS DIMENSION ON ALL SIDES - MEASURED PERPENDICULAR TO GLASS EDGE

QUANTITY REQ'D= 3

GLASS PANELS SEEN FROM ABOVE/OUTSIDE. REF. SHEET MU801 FOR GLASS MAKE-UP AND HOLE DETAILS

G2.4

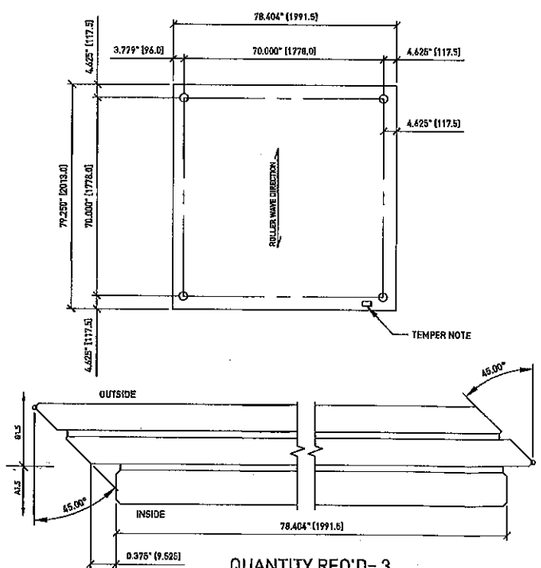

NOTE: HOLD THIS DIMENSION ON ALL SIDES - MEASURED PERPENDICULAR TO GLASS EDGE

QUANTITY REQ'D= 3

GLASS PANELS SEEN FROM ABOVE/OUTSIDE. REF. SHEET MU801 FOR GLASS MAKE-UP AND HOLE DETAILS

G2.5

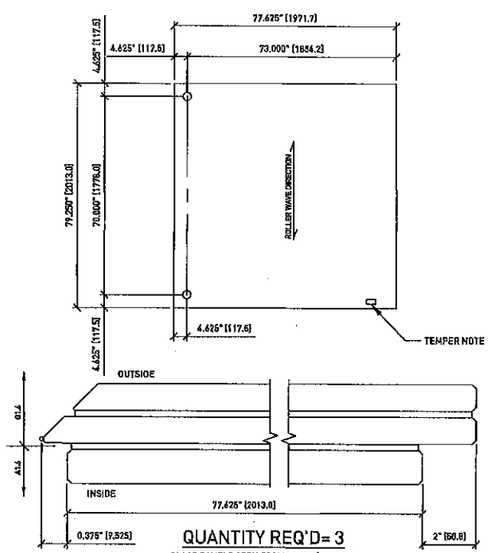

NOTE: HOLD THIS DIMENSION ON 3 SIDES - MEASURED PERPENDICULAR TO GLASS EDGE

QUANTITY REQ'D= 3

GLASS PANELS SEEN FROM ABOVE/OUTSIDE. REF. SHEET MU801 FOR GLASS MAKE-UP AND HOLE DETAILS

NOTE: HOLD THIS DIMENSION ON THIS SIDE ONLY - MEASURED PERPENDICULAR TO GLASS EDGE

G2.6

ETHAN A. CHARPENTIER
LICENSE
No. 65106
STATE OF FLORIDA
PROFESSIONAL ENGINEER

AUG 2 5 2011

Approved as complying with the Florida Building Code
Date 08/25/2011
NOA# 11-0412.06
Miami Dade Product Control
By

ALL RIGHTS RESERVED. THIS DRAWING OR ANY PART THEREOF MUST NOT BE REPRODUCED WITHOUT PERMISSION OF NOVUM STRUCTURES LLC.

Larson Engineering, Inc.
3524 Labore Road
White Bear Lake, MN 55110
(P) 651.481.9130 (F) 651.481.9205

Florida Firm No. F-02000005135
Certificate of Authorization #8903
Ethan A. Charpentier
Registration No. 65106
ENGINEER STAMP:

APPROVAL STAMP:

NOVUM STAMP:

REV.NO.	DATE	DWG.BY	CHK.BY
1	23JUL11	BTH	SWK

REVISED PER COMMENTS BY BCCO

Novum Structures LLC
W126 N8585 Westbrook Crossing
Menomonee Falls, WI 53051 USA
T 262.255.5561
www.novumstructures.com
info@novumstructures.com

NOVUM

PROJECT:
NOVUM'S HURRICANE PSG
GLASS SYSTEM: HG01
VERTICAL WALL SYSTEM

DRAWING DESCRIPTION:
GLAS DETAILS
ART GLASS

DRAWN BY: BTH	DATE: 22JUL11
CHECKED BY: SWK	APPROVED BY: SWK
SCALE: NONE	PROJECT MANAGER: GB

PROJECT NUMBER: 25-183

SHEET NUMBER: MU803-1

17Aug2011 4:59 PM P:\PROJECTS\2005\25-183 MIC EARLINGTON HEIGHTS CONNECTOR\2103 DRAWINGS\AUTOCAD DWGS\NOA\MU803.DWG

ETHAN A. CARPENTIER LICENSE No. 65106 STATE OF FLORIDA PROFESSIONAL ENGINEER
AUG 25 2011

NOVUM

Bill of Material

Project	Project No.	BoM Rev.No.	Rev. Date:	Rev. By:	Desc. / Rev. Dwg.
NOA H601 BOM	25-183				
Description: VERTICAL WALL SYSTEM	BoM Number: MU804				

Fab No.	Component No.	Revision Dwg	Revision BoM	Quantity	Description	Unit: Inches (U.N.O.) Width	Length	Material	Standard / Finish	Weight Unit: Pounds Piece	Total	Painting Area Piece	Total	Production Component Type	Remarks	Release Date
HA600					HARDWARE & ACCESSORIES											
					Dow Corning #795 Silicone - Black											
					1/4-20 UNC Hex Head Bolt, 0.875"		0.875	GR.5	ZP							
					1/4-20 UNC Hex Nut			GR.5	ZP							
					1/4 Flat Washer - 0.281" ID, 0.625" OD, 0.09" Thick			GR.5	ZP							
	TR-336E				Arrow-shim Extrusion - Black				Black							
	GP75-26				Silicone Extrusion			70 DURO SHORE A	Black							
	GP75-36				Silicone Extrusion			70 DURO SHORE A	Black							
RB22-16					Buttonhead Rotule											
	RB22A				BUTTONHEAD ROTULE ASSEMBLY:											
					BUTTONHEAD 20mm DIA. BALL JOINT HEAD			316 SS								
	RTR16-SS				M16x75 THREADED ROD W/ 20mm DIA. BALL JOINT HEAD			316 SS								
	RGW-SR				GLASS CONTACT WASHER			SILICONE SHORE A 60 HARDNESS	BLACK							
	RTR-SR				ROTULE TIGHTENING RING			316 SS								
	M16LJN-A4				M16 LOW HEXAGON JAM NUT			DIN 936-A4								
	RSB13-AL				ROTULE SLEEVE FOR BUTTON HEAD ROTULE, 13mm LONG			6063-0 ALUM								
	M16LJN-A4				M16 LOW HEXAGON JAM NUT			DIN 936-A4								
	RW16-SS				STAINLESS STEEL WASHER FOR 16mm THREADED ROD			316 SS								
	RW16-TP				TEFLON WASHER (SEE INSTALLATION INSTRUCTIONS)			PTFE (TEFLON)								
					CHANNEL				PR-FC							
					PLATE 0.188	TBD	121.000	5052-H32 AL								
					CHANNEL SPLICE STRIP				PR-FC							
					PLATE 20GA	TBD	2.000	5052-H32 AL								

Approved as complying with the Florida Building Code
Date 08/25/2011
NOA# 11-0412.06
Miami Dade Product Control
By

Originator	Date
TJQ	19 May 10

Abbreviation Key
TYP. = Typical
SIM. = Similar
G.F. = Grind Flush
G.S. = Grind Smooth
O.D. = Outer Diameter
I.D. = Inner Diameter
T.B.D. = To Be Determined
U.N.O = Unless Noted Otherwise

Finish Code Key
ZP = Zinc Plated
HDG = Hot Dip Galvanized
R = Raw or Bare or No Finish
FC = Unspecified Finish Coat
FC-L = Liquid Finish Coat
FC-P = Powder Finish Coat
PR = Primed
AA = Anodized Aluminum

Fab / Component Type Key
SC = Subcomponents (Plate, Clip)
PRO = Profiles
H = Hardware
A = Accessories
G = Glass
N = Nodes
B = Bearing Points
E = Embeds
S W = AES/BB Steelwork
SF = Space Frame

ALL RIGHTS RESERVED. THIS DRAWING OR ANY PART THEREOF MUST NOT BE REPRODUCED WITHOUT PERMISSION OF NOVUM STRUCTURES LLC.

Larson Engineering, Inc.
3334 Tabors Road
Lake Geneva, WI 53147
(P) 631.481.8120 (F) 631.481.9201

Florida Firm No. F-02000008175
Certificate of Authorization #5803
Ethan A. Carpenter
Registration No. 65106
ENGINEER STAMP:

APPROVAL STAMP:

NOVUM STAMP:

REV.NO.	DATE	DWG.BY	CHK.BY
1	2AUG11	BTH	SWK

REVISED PER COMMENTS BY BCCO

Novum Structures LLC
W126 N9565 Westbrook Crossing
Menomonee Falls, WI 53051 USA
T 262.255.5561
www.novumstructures.com
info@novumstructures.com

NOVUM

PROJECT:
NOVUM'S HURRICANE PSG
GLASS SYSTEM: H601
VERTICAL WALL SYSTEM

DRAWING DESCRIPTION:
MOCK-UP #1 & #2
BILL OF MATERIALS

DRAWN BY:	DATE:
BTH	2AUG11
CHECKED BY: SWK	APPROVED BY: SWK
SCALE: NONE	PROJECT MANAGER: GB

PROJECT NUMBER: 25-183

SHEET NUMBER: MU804-1

17Aug2011 4:56 PM P:\PROJECTS\2005\25-183 MIC EARLINGTON HEIGHTS CONNECTOR\2103 DRAWINGS\AUTOCAD DWGS\NOA\MU804.DWG