MIAMI-DADE COUNTY
BUILDING AND NEIGHBORHOOD COMPLIANCE DEPARTMENT (BNC)
BOARD AND CODE ADMINISTRATION DIVISION

MIAMI-DADE COUNTY
PRODUCT CONTROL SECTION
11805 SW 26 Street, Room 208
Miami, Florida 33175-2474
T (786) 315-2590 F (786) 315-2599
www.miamidade.gov/building/

NOTICE OF ACCEPTANCE (NOA)

CRL Impact Doors, Inc. dba Delta Doors
7500 NW 69th Avenue
Miami, FL 33166

SCOPE:

This NOA is being issued under the applicable rules and regulations governing the use of construction materials. The documentation submitted has been reviewed and accepted by Miami-Dade County BNC - Product Control Section to be used in Miami Dade County and other areas where allowed by the Authority Having Jurisdiction (AHJ).

This NOA shall not be valid after the expiration date stated below. The Miami-Dade County Product Control Section (In Miami Dade County) and/or the AHJ (in areas other than Miami Dade County) reserve the right to have this product or material tested for quality assurance purposes. If this product or material fails to perform in the accepted manner, the manufacturer will incur the expense of such testing and the AHJ may immediately revoke, modify, or suspend the use of such product or material within their jurisdiction. BNC reserves the right to revoke this acceptance, if it is determined by Miami-Dade County Product Control Section that this product or material fails to meet the requirements of the applicable building code.

This product is approved as described herein, and has been designed to comply with the Florida Building Code, including the High Velocity Hurricane Zone.

DESCRIPTION: Series "DSF 450" Aluminum Storefront System – N.I.

APPROVAL DOCUMENT: Drawing No. **W11-09,** titled "Series-DSF-450 Alum Storefront System (N.I.)", sheets 1 through 12 of 12, prepared by Al Farooq Corporation, dated 02-25-11 with revision A dated 07/28/11, signed and sealed by Javad Ahmad, P.E., bearing the Miami-Dade County Product Control Approval stamp with the Notice of Acceptance number and approval date by the Miami-Dade County Product Control Section.

MISSILE IMPACT RATING: None.

LABELING: Each unit shall bear a permanent label with the manufacturer's name or logo, city, state, model/series, and following statement: "Miami-Dade County Product Control Approved", unless otherwise noted herein.

RENEWAL of this NOA shall be considered after a renewal application has been filed and there has been no change in the applicable building code negatively affecting the performance of this product.

TERMINATION of this NOA will occur after the expiration date or if there has been a revision or change in the materials, use, and/or manufacture of the product or process. Misuse of this NOA as an endorsement of any product, for sales, advertising or any other purposes shall automatically terminate this NOA. Failure to comply with any section of this NOA shall be cause for termination and removal of NOA.

ADVERTISEMENT: The NOA number preceded by the words Miami-Dade County, Florida, and followed by the expiration date may be displayed in advertising literature. If any portion of the NOA is displayed, then it shall be done in its entirety.

INSPECTION: A copy of this entire NOA shall be provided to the user by the manufacturer or its distributors and shall be available for inspection at the job site at the request of the Building Official.

This NOA consists of this page 1 and evidence pages E-1 and E-2, as well as approval document mentioned above.

The submitted documentation was reviewed by **Manuel Perez, P.E.**

MIAMI-DADE COUNTY APPROVED

NOA No. 11-0415.01
Expiration Date: August 18, 2016
Approval Date: August 18, 2011

CRL Impact Doors, Inc. dba Delta Doors

NOTICE OF ACCEPTANCE: EVIDENCE SUBMITTED

A. DRAWINGS

1. Manufacturer's die drawings and sections.
2. Drawing No. **W11-09**, titled "Series-DSF 450 Alum Storefront System (N.I.)" Sheets 1 through 12 of 12, dated 02/25/11 with revision A dated 07/28/11, prepared by Al-Farooq Corporation, signed and sealed by Javad Ahmad, P.E.

B. TESTS

1. Test reports on: 1) Air Infiltration Test, per FBC, TAS 202-94
   2) Uniform Static Air Pressure Test, Loading per FBC TAS 202-94
   3) Water Resistance Test, per FBC, TAS 202-94

   along with marked-up drawings and installation diagram of series DSF-450 aluminum window wall system, prepared by Fenestration Testing Laboratory, Inc., Test Report No. **FTL-4305**, dated 08/19/04, signed and sealed by Edmundo Largaespada, P.E.
   Reviewed, signed and sealed by Marlin Brinson, P.E.
2. Test reports on: 1) Air Infiltration Test, per FBC, TAS 202-94
   2) Uniform Static Air Pressure Test, Loading per FBC TAS 202-94
   3) Water Resistance Test, per FBC, TAS 202-94
   4) Forced Entry Test, per FBC 2411 3.2.1, TAS 202-94

   along with marked-up drawings and installation diagram of series DSF-450 outswing medium stile aluminum storefront doors with transom and sidelites, prepared by Fenestration Testing Laboratory, Inc., Test Report No. **FTL-4242**, dated 08/18/04, signed and sealed by Edmundo Largaespada, P.E.
   Reviewed, signed and sealed by Marlin Brinson, P.E.
3. Test reports on: 1) Air Infiltration Test, per FBC, TAS 202-94
   2) Uniform Static Air Pressure Test, Loading per FBC TAS 202-94
   3) Water Resistance Test, per FBC, TAS 202-94
   4) Forced Entry Test, per FBC 2411 3.2.1, TAS 202-94

   along with marked-up drawings and installation diagram of series DSF-450 non-impact aluminum storefront system, prepared by Hurricane Engineering and Testing, Inc., Test Report No. **HETI-03-1324**, dated 07/22/03 and revised on 01/21/05, signed and sealed by Rafael Droz-Seda, P.E.

C. CALCULATIONS:

1. Anchor verification calculations and structural analysis, complying with FBC-2007, prepared by Al-Farooq Corporation, dated 03/01/11, signed and sealed by Javad Ahmad, P.E.
2. Glazing complies with ASTM E1300-04.

Manuel Perez, P.E.
Product Control Examiner
NOA No. 11-0415.01
Expiration Date: August 18, 2016
Approval Date: August 18, 2011

NOTICE OF ACCEPTANCE: EVIDENCE SUBMITTED

D. QUALITY ASSURANCE

1. Miami-Dade Building and Neighborhood Compliance Department (BNC).

E. MATERIAL CERTIFICATIONS

1. None.

F. STATEMENTS

1. Statement letter of conformance and no financial interest, issued by al-Farooq Corporation, dated 04/07/11, signed and sealed by Javad Ahmad, P.E.
2. Asset purchase agreement between CRL Impact Doors, Inc. and Vidco Industries, Inc., dated December 17, 2010, signed by Mr. Lloyd W. Talbert and Mr. Jesus Martinez.

G. OTHERS

1. None.

Manuel Perez, P.E.
Product Control Examiner
NOA No. 11-0415.01
Expiratiou Date: August 18, 2016
Approval Date: August 18, 2011

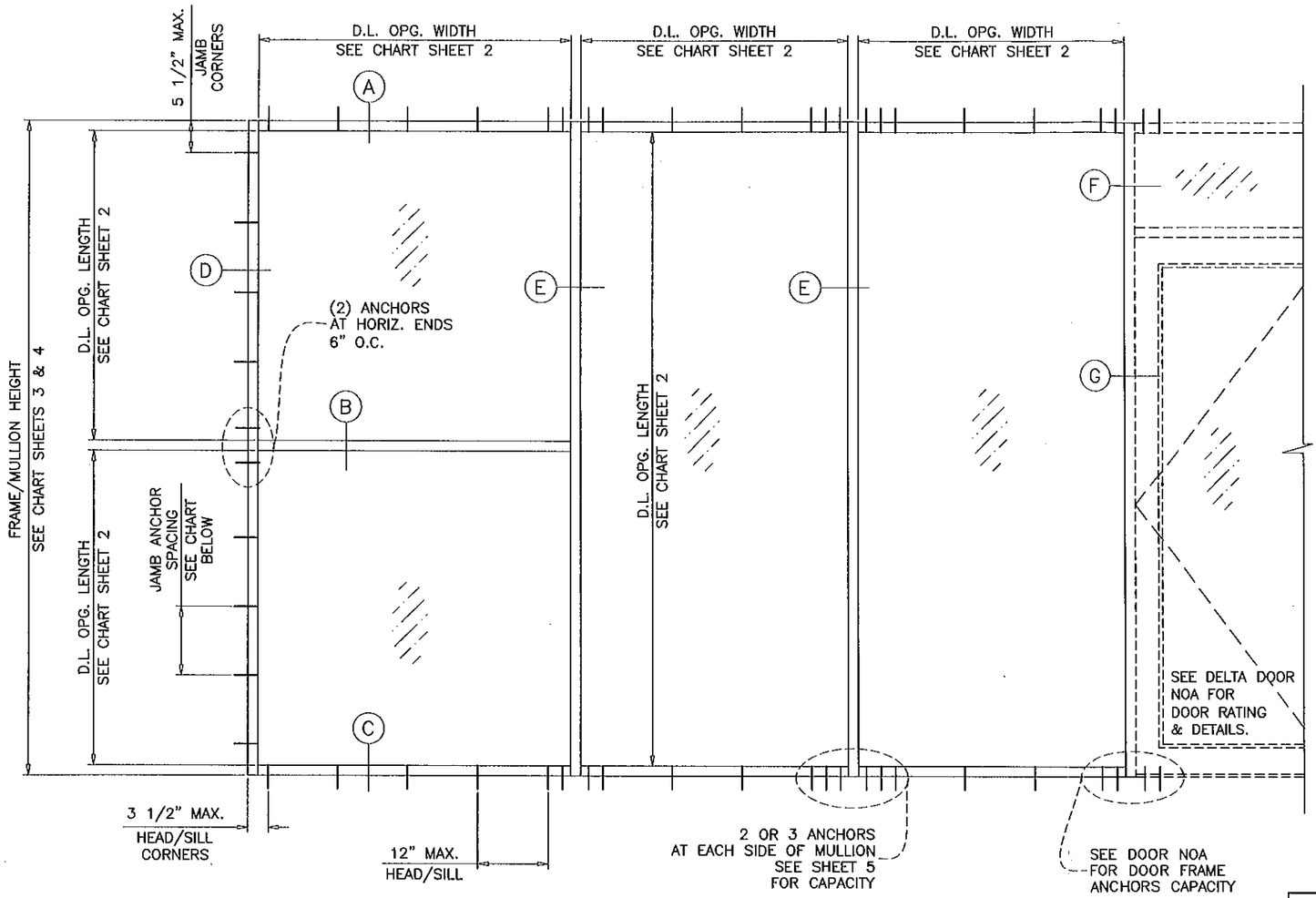

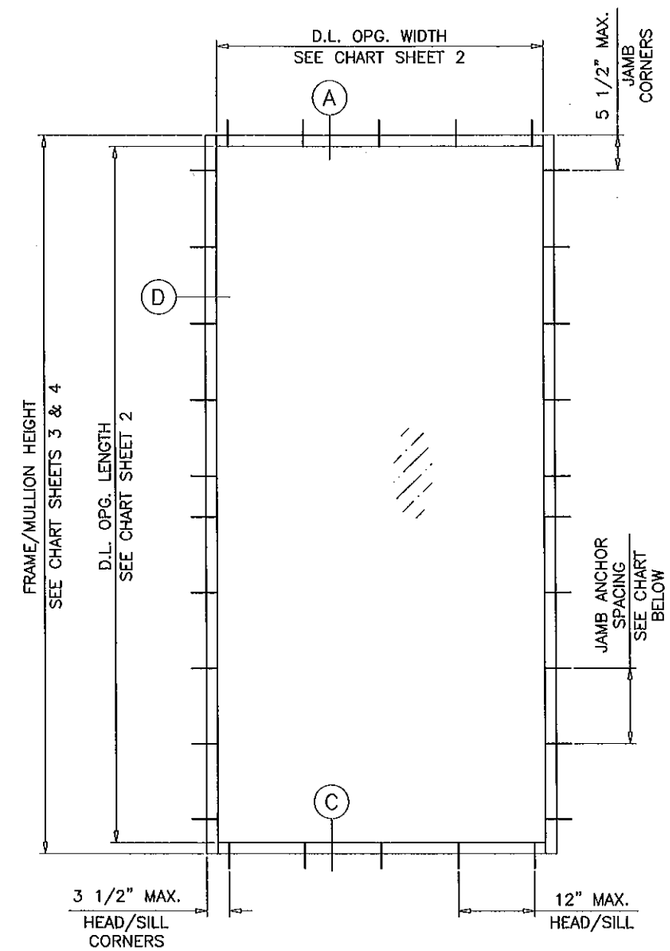

TYPICAL ELEVATIONS

JAMB ANCHOR SPACING		
ANCHOR TYPES	3/8" SHIM SPACE	1/4" SHIM SPACE
A	6" O.C	–
B	6" O.C.	–
C	6" O.C.	12" O.C.

SERIES DSF450
ALUMINUM STOREFRONT SYSTEM

THIS SYSTEM MAY BE USED IN CONJUNCTION WITH MIAMI–DADE COUNTY APPROVED FRENCH DOORS.
LOWER DESIGN PRESSURE FROM STOREFRONT OR DOOR APPROVAL WILL APPLY TO ENTIRE SYSTEM.

CODE REQUIREMENTS FOR SAFEGUARDS MUST BE OBSERVED.

THIS PRODUCT HAS BEEN DESIGNED AND TESTED TO COMPLY WITH THE REQUIREMENTS OF THE FLORIDA BUILDING CODE 2007 EDITION INCLUDING HIGH VELOCITY HURRICANE ZONE (HVHZ).

WOOD BUCKS BY OTHERS, MUST BE ANCHORED PROPERLY TO TRANSFER LOADS TO THE STRUCTURE.

ANCHORS SHALL BE AS LISTED, SPACED AS SHOWN ON DETAILS, ANCHORS EMBEDMENT TO BASE MATERIAL SHALL BE BEYOND WALL DRESSING OR STUCCO.

ANCHORING OR LOADING CONDITIONS NOT SHOWN IN THESE DETAILS ARE NOT PART OF THIS APPROVAL.

A LOAD DURATION INCREASE IS USED IN DESIGN OF ANCHORS INTO WOOD ONLY.

MATERIALS INCLUDING BUT NOT LIMITED TO STEEL/METAL SCREWS, THAT COME INTO CONTACT WITH OTHER DISSIMILAR MATERIALS SHALL MEET THE REQUIREMENTS OF 2007 FLORIDA BLDG. CODE SECTION 2003.8.4.

INSTRUCTIONS:

USE CHARTS AS FOLLOWS.

STEP 1 DETERMINE DESIGN WIND LOAD REQUIREMENT BASED ON WIND VELOCITY, BLDG. HEIGHT, WIND ZONE USING APPLICABLE ASCE 7 STANDARD.

STEP 2 SEE CHARTS ON SHEET 2 FOR DESIGN LOAD CAPACITY OF DESIRED GLASS SIZE.

STEP 3 CHECK MULLION CAPACITY FOR A GIVEN SPACING AND HEIGHT USING CHARTS ON SHEETS 3 & 4 FOR STOREFRONT MULLION AND SHEET 6 & 7 FOR DOOR MULLION. THE CAPACITY SHOULD EXCEED THE DESIGN LOAD.

STEP 4 USING CHART ON SHEETS 5 SELECT ANCHOR OPTION WITH DESIGN RATING MORE THAN DESIGN LOAD SPECIFIED IN STEP 1 ABOVE.

STEP 5 THE LOWEST VALUE RESULTING FROM STEPS 2, 3 AND 4 SHALL APPLY TO ENTIRE SYSTEM.

THIS SYSTEM IS NOT RATED FOR IMPACT.
INSTALLATION OF THIS PRODUCT IN THE HVHZ AREA REQUIRES THE USE OF APPROVED SHUTTERS OR EXTERNAL PROTECTION DEVICES COMPLYING WITH HVHZ REQUIREMENTS.
INSTALLATION OF THIS SYSTEM OUTSIDE THE HVHZ AREA SHALL MEET THE APPLICABLE REQUIREMENTS FOR WIND BORNE DEBRIS PROTECTION.

Engr: JAVAD AHMAD
CIVIL
FLA. PE # 70592
C.A.N. 3538
AUG 02 2011

Approved as complying with the Florida Building Code
Date AUG. 18, 2011
NOA# 11-0415.01
Miami Dade Product Control
By Manuel Perez

AL-FAROOQ CORPORATION
ENGINEERS & PRODUCT DEVELOPMENT
1235 S.W. 87 AVE
MIAMI, FLORIDA 33174
TEL. (305) 264-8100 FAX. (305) 262-6978

STORE\W11-09DD

SERIES-DSF450 ALUM STOREFRONT SYSTEM (N.I.)

CRL IMPACT DOORS, INC
d/b/a DELTA DOORS
7500 N.W. 69TH AVE.
MIAMI, FL 33166
TEL (305) 888-0077 FAX. (305) 884-3111

revisions:		
no	date	by: description
A	07.28.11	REV. PER BNC COMMENTS

date: 02-25-11
scale: 1/2"=1'-0"
dr. by: HAMID
chk. by:

drawing no.
W11-09

GLASS LOAD CAPACITY – PSF		
NOMINAL DIMS.		1/4" TEMP. GLASS
D.L.O. WIDTH	D.L.O. HEIGHT	EXT.(+) & INT.(–)
24"	72"	120.0
28"		120.0
32"		120.0
36"		120.0
40"		120.0
44"		120.0
48"		120.0
52"		120.0
56"		120.0
60"		120.0
64"		120.0
68"		120.0
72"		120.0
24"	78"	120.0
28"		120.0
32"		120.0
36"		120.0
40"		120.0
44"		120.0
48"		120.0
52"		120.0
56"		120.0
60"		120.0
64"		120.0
68"		120.0
24"	84"	120.0
28"		120.0
32"		120.0
36"		120.0
40"		120.0
44"		120.0
48"		120.0
52"		120.0
56"		120.0
60"		120.0
64"		120.0
24"	90"	120.0
28"		120.0
32"		120.0
36"		120.0
40"		120.0
44"		120.0
48"		120.0
52"		120.0
56"		120.0
24"	96"	120.0
28"		120.0
32"		120.0
36"		120.0
40"		120.0
44"		115.2
48"		112.6
52"		111.1
56"		110.6

GLASS LOAD CAPACITY – PSF		
NOMINAL DIMS.		1/4" TEMP. GLASS
D.L.O. WIDTH	D.L.O. HEIGHT	EXT.(+) & INT.(–)
24"	102"	120.0
28"		120.0
32"		120.0
36"		120.0
40"		115.2
44"		107.0
48"		103.9
52"		102.4
24"	108"	120.0
28"		120.0
32"		120.0
36"		120.0
40"		110.1
44"		100.9
48"		96.8
24"	114"	120.0
28"		120.0
32"		120.0
36"		120.0
40"		106.0
44"		95.7
24"	120"	120.0
28"		120.0
32"		120.0
36"		120.0
40"		102.9
44"		92.2
24"	126"	120.0
28"		120.0
32"		120.0
36"		119.8
40"		100.9
24"	132"	120.0
28"		120.0
32"		120.0
36"		117.8
40"		98.8
24"	138"	120.0
28"		120.0
32"		120.0
36"		115.7
24"	144"	120.0
28"		120.0
32"		120.0
36"		113.7

NOTE:
INTERPOLATION BETWEEN WIDTHS OR HEIGHTS ALLOWED.

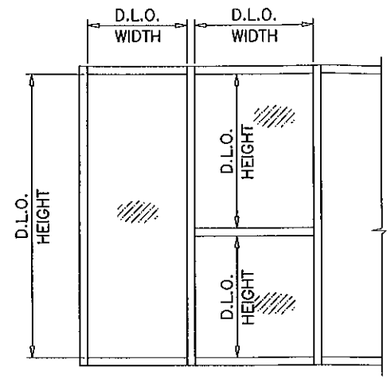

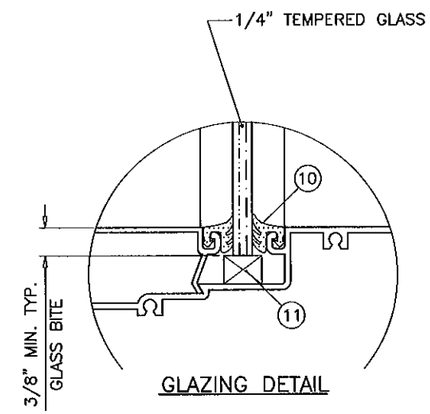

GLAZING DETAIL

NOTE:
GLASS CAPACITIES ON THIS SHEET ARE BASED ON ASTM E1300–04 (3 SEC. GUSTS).

GLASS

Engr; JAVAD AHMAD
CIVIL
FLA. PE # 70592
C.A.N. 3538
AUG 02 2011

Approved as complying with the Florida Buiding Code
Date AUG 18, 2011
NOA# 11-0415.01
Miami Dade Product Control
By Maurel Perez

AL-FAROOQ CORPORATION
ENGINEERS & PRODUCT DEVELOPMENT
1235 S.W. 87 AVE
MIAMI, FLORIDA 33174
TEL. (305) 264-8100 FAX. (305) 262-6978

STORE\W11–09DD

SERIES–DSF450 ALUM STOREFRONT SYSTEM (N.I.)

CRL IMPACT DOORS, INC
d/b/a DELTA DOORS
7500 N.W. 69TH AVE.
MIAMI, FL 33166
TEL (305) 888–0077 FAX. (305) 884–3111

revisions:

no	date	by	description
A	07.28.11		REV. PER BNC COMMENTS

date: 02–25–11
scale: –
dr. by: HAMID
chk. by:

drawing no.
W11–09

MULLION LOAD CAPACITY – PSF
WITHOUT INTERMEDIATE HORIZONTALS

NOMINAL DIMS.		WITHOUT REINFORCING		WITH REINFORCING	
WIDTH (W)	FRAME HEIGHT	EXT.(+)	INT.(–)	EXT.(+)	INT.(–)
24"	60"	80.0	120.0	80.0	120.0
30"		80.0	120.0	80.0	120.0
36"		80.0	120.0	80.0	120.0
42"		80.0	120.0	80.0	120.0
48"		80.0	120.0	80.0	120.0
54"		80.0	120.0	80.0	120.0
60"		80.0	120.0	80.0	120.0
66"		80.0	120.0	80.0	120.0
72"		80.0	120.0	80.0	120.0
24"	66"	80.0	120.0	80.0	120.0
30"		80.0	120.0	80.0	120.0
36"		80.0	120.0	80.0	120.0
42"		80.0	120.0	80.0	120.0
48"		80.0	110.9	80.0	120.0
54"		80.0	104.7	80.0	120.0
60"		80.0	101.1	80.0	120.0
66"		80.0	99.8	80.0	120.0
72"		–	–	80.0	120.0
24"	72"	80.0	120.0	80.0	120.0
30"		80.0	120.0	80.0	120.0
36"		80.0	110.5	80.0	120.0
42"		80.0	97.9	80.0	120.0
48"		80.0	89.2	80.0	120.0
54"		80.0	83.2	80.0	120.0
60"		79.2	79.2	80.0	120.0
66"		–	–	80.0	120.0
72"		–	–	80.0	120.0
24"	78"	80.0	120.0	80.0	120.0
30"		80.0	108.0	80.0	120.0
36"		80.0	92.0	80.0	120.0
42"		80.0	81.1	80.0	120.0
48"		73.4	73.4	80.0	120.0
54"		67.9	67.9	80.0	120.0
60"		–	–	80.0	120.0
66"		–	–	80.0	116.6
72"		–	–	80.0	113.7
24"	84"	80.0	112.8	80.0	120.0
30"		80.0	91.6	80.0	120.0
36"		77.8	77.8	80.0	120.0
42"		68.3	68.3	80.0	120.0
48"		61.4	61.4	80.0	117.8
54"		56.5	56.5	80.0	108.3
60"		–	–	80.0	101.3
66"		–	–	80.0	96.3
72"		–	–	80.0	92.9
24"	90"	80.0	97.0	80.0	120.0
30"		78.6	78.6	80.0	120.0
36"		66.6	66.6	80.0	120.0
42"		58.3	58.3	80.0	112.7
48"		52.2	52.2	80.0	101.0
54"		–	–	80.0	92.4
60"		–	–	80.0	85.9
66"		–	–	80.0	81.1
72"		–	–	77.7	77.7

MULLION LOAD CAPACITY – PSF
WITHOUT INTERMEDIATE HORIZONTALS

NOMINAL DIMS.		WITHOUT REINFORCING		WITH REINFORCING	
WIDTH (W)	FRAME HEIGHT	EXT.(+)	INT.(–)	EXT.(+)	INT.(–)
24"	96"	80.0	80.5	80.0	120.0
30"		65.3	65.3	80.0	120.0
36"		55.4	55.4	80.0	112.6
42"		48.5	48.5	80.0	98.2
48"		43.5	43.5	80.0	87.7
54"		–	–	79.9	79.9
60"		–	–	74.0	74.0
66"		–	–	69.4	69.4
72"		–	–	66.1	66.1
24"	102"	67.0	67.0	80.0	120.0
30"		54.2	54.2	80.0	117.5
36"		45.9	45.9	80.0	99.2
42"		40.1	40.1	80.0	86.3
48"		–	–	76.9	76.9
54"		–	–	69.8	69.8
60"		–	–	64.4	64.4
66"		–	–	60.2	60.2
24"	108"	56.3	56.3	80.0	120.0
30"		45.5	45.5	80.0	104.5
36"		38.5	38.5	80.0	88.1
42"		33.5	33.5	76.5	76.5
48"		–	–	68.0	68.0
54"		–	–	61.6	61.6
60"		–	–	56.6	56.6
66"		–	–	52.8	52.8
24"	114"	47.8	47.8	80.0	116.0
30"		38.6	38.6	80.0	93.6
36"		32.5	32.5	78.7	78.7
42"		–	–	68.3	68.3
48"		–	–	60.6	60.6
54"		–	–	54.8	54.8
60"		–	–	50.2	50.2
24"	120"	40.9	40.9	80.0	104.6
30"		33.0	33.0	80.0	84.3
36"		27.8	27.8	70.8	70.8
42"		–	–	61.4	61.4
48"		–	–	54.4	54.4
54"		–	–	49.1	49.1
60"		–	–	44.9	44.9
24"	126"	35.3	35.3	80.0	94.7
30"		28.4	28.4	76.3	76.3
36"		23.9	23.9	64.1	64.1
42"		–	–	55.5	55.5
48"		–	–	49.1	49.1
54"		–	–	44.2	44.2

NOTE:
INTERPOLATION BETWEEN WIDTHS OR HEIGHTS ALLOWED.

MULLION LOAD CAPACITY – PSF
WITHOUT INTERMEDIATE HORIZONTALS

NOMINAL DIMS.		WITHOUT REINFORCING		WITH REINFORCING	
WIDTH (W)	FRAME HEIGHT	EXT.(+)	INT.(–)	EXT.(+)	INT.(–)
24"	132"	30.6	30.6	80.0	86.2
30"		24.7	24.7	69.4	69.4
36"		–	–	58.2	58.2
42"		–	–	50.4	50.4
48"		–	–	44.5	44.5
54"		–	–	40.1	40.1
24"	138"	26.8	26.8	78.8	78.8
30"		21.6	21.6	63.4	63.4
36"		–	–	53.2	53.2
42"		–	–	46.0	46.0
48"		–	–	40.6	40.6
24"	144"	23.5	23.5	72.3	72.3
30"		18.9	18.9	58.2	58.2
36"		–	–	48.8	48.8
42"		–	–	42.1	42.1
48"		–	–	37.2	37.2

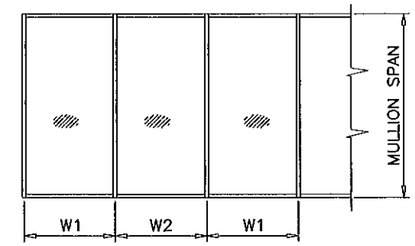

$$\text{WIDTH (W)} = \frac{W1 + W2}{2}$$

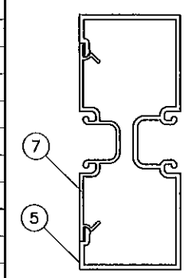

Ix IN^4	Sx IN^3
2.7207	1.2092

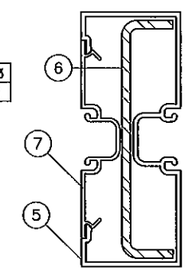

	Ix IN^4	Sx IN^3
ALUMINUM	2.7207	1.2092
STEEL	2.0697	.9856
TOTAL Ix ALUM + Ix STL X 2.9	8.7228	

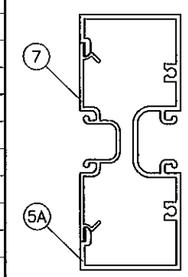

Ix IN^4	Sx IN^3
2.7745	1.2331

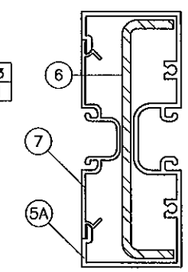

	Ix IN^4	Sx IN^3
ALUMINUM	2.7745	1.2331
STEEL	2.0697	.9856
TOTAL Ix ALUM + Ix STL X 2.9	8.7766	

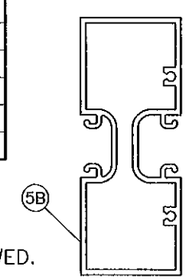

Ix IN^4	Sx IN^3
3.0941	1.3752

MULLION
W/O REINFORCING

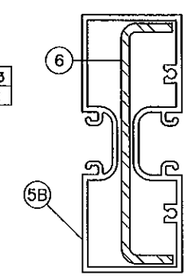

	Ix IN^4	Sx IN^3
ALUMINUM	3.0941	1.3752
STEEL	2.0697	.9856
TOTAL Ix ALUM + Ix STL X 2.9	9.0962	

MULLION
W/ REINFORCING

Engr: JAVAD AHMAD
CIVIL
FLA. PE # 70592
C.A.N. 3538
AUG 02 2011

Approved as complying with the Florida Building Code
Date AUG. 18, 2011
NOA# 11-0415.01
Miami Dade Product Control
By Manuel Perez

MULLIONS

AL-FAROOQ CORPORATION
ENGINEERS & PRODUCT DEVELOPMENT
1235 S.W. 87 AVE
MIAMI, FLORIDA 33174
TEL. (305) 264-8100 FAX. (305) 262-6978
STORE\W11-09DD

SERIES-DSF450 ALUM STOREFRONT SYSTEM (N.I.)
CRL IMPACT DOORS, INC
d/b/a DELTA DOORS
7500 N.W. 69TH AVE.
MIAMI, FL 33166
TEL (305) 888-0077 FAX. (305) 884-3111

revisions:

no	date	by	description
A	07.28.11		REV. PER BNC COMMENTS

date: 02-25-11
scale: –
dr. by: HAMID
chk. by:

drawing no.
W11-09

MULLION LOAD CAPACITY – PSF WITH INTERMEDIATE HORIZONTALS

NOMINAL DIMS.		WITHOUT REINFORCING		WITH REINFORCING	
WIDTH (W)	FRAME HEIGHT	EXT.(+)	INT.(–)	EXT.(+)	INT.(–)
24"	60"	80.0	120.0	80.0	120.0
30"		80.0	120.0	80.0	120.0
36"		80.0	120.0	80.0	120.0
42"		80.0	120.0	80.0	120.0
48"		80.0	111.8	80.0	120.0
54"		80.0	99.4	80.0	120.0
60"		80.0	89.5	80.0	120.0
66"		80.0	81.3	80.0	120.0
72"		74.6	74.6	80.0	120.0
24"	66"	80.0	120.0	80.0	120.0
30"		80.0	120.0	80.0	120.0
36"		80.0	120.0	80.0	120.0
42"		80.0	104.6	80.0	120.0
48"		80.0	91.5	80.0	120.0
54"		80.0	81.3	80.0	120.0
60"		73.2	73.2	80.0	120.0
66"		66.5	66.5	80.0	120.0
72"		–	–	80.0	113.6
24"	72"	80.0	120.0	80.0	120.0
30"		80.0	120.0	80.0	120.0
36"		80.0	101.5	80.0	120.0
42"		80.0	87.0	80.0	120.0
48"		76.1	76.1	80.0	120.0
54"		67.7	67.7	80.0	120.0
60"		60.9	60.9	80.0	114.6
66"		–	–	80.0	104.2
72"		–	–	80.0	95.5
24"	78"	80.0	120.0	80.0	120.0
30"		80.0	102.8	80.0	120.0
36"		80.0	85.6	80.0	120.0
42"		73.4	73.4	80.0	120.0
48"		64.2	64.2	80.0	120.0
54"		57.1	57.1	80.0	108.5
60"		–	–	80.0	97.6
66"		–	–	80.0	88.8
72"		–	–	80.0	81.4
24"	84"	80.0	109.7	80.0	120.0
30"		80.0	87.8	80.0	120.0
36"		73.2	73.2	80.0	120.0
42"		62.7	62.7	80.0	120.0
48"		54.9	54.9	80.0	105.2
54"		48.8	48.8	80.0	93.5
60"		–	–	80.0	84.2
66"		–	–	76.5	76.5
72"		–	–	70.2	70.2
24"	90"	80.0	94.7	80.0	120.0
30"		75.8	75.8	80.0	120.0
36"		63.2	63.2	80.0	120.0
42"		54.1	54.1	80.0	104.8
48"		47.4	47.4	80.0	91.7
54"		–	–	80.0	81.5
60"		–	–	73.3	73.3
66"		–	–	66.7	66.7
72"		–	–	61.1	61.1

MULLION LOAD CAPACITY – PSF WITH INTERMEDIATE HORIZONTALS

NOMINAL DIMS.		WITHOUT REINFORCING		WITH REINFORCING	
WIDTH (W)	FRAME HEIGHT	EXT.(+)	INT.(–)	EXT.(+)	INT.(–)
24"	96"	78.7	78.7	80.0	120.0
30"		63.0	63.0	80.0	120.0
36"		52.5	52.5	80.0	107.4
42"		45.0	45.0	80.0	92.1
48"		39.4	39.4	80.0	80.6
54"		–	–	71.6	71.6
60"		–	–	64.5	64.5
66"		–	–	58.6	58.6
72"		–	–	53.7	53.7
24"	102"	65.6	65.6	80.0	120.0
30"		52.5	52.5	80.0	114.2
36"		43.8	43.8	80.0	95.2
42"		37.5	37.5	80.0	81.6
48"		–	–	71.4	71.4
54"		–	–	63.4	63.4
60"		–	–	57.1	57.1
66"		–	–	51.9	51.9
24"	108"	55.3	55.3	80.0	120.0
30"		44.2	44.2	80.0	101.9
36"		36.9	36.9	80.0	84.9
42"		31.6	31.6	72.8	72.8
48"		–	–	63.7	63.7
54"		–	–	56.6	56.6
60"		–	–	50.9	50.9
66"		–	–	46.3	46.3
24"	114"	47.0	47.0	80.0	114.3
30"		37.6	37.6	80.0	91.4
36"		31.3	31.3	76.2	76.2
42"		–	–	65.3	65.3
48"		–	–	57.1	57.1
54"		–	–	50.8	50.8
60"		–	–	45.7	45.7
24"	120"	40.3	40.3	80.0	103.1
30"		32.2	32.2	80.0	82.5
36"		26.9	26.9	68.8	68.8
42"		–	–	58.9	58.9
48"		–	–	51.6	51.6
54"		–	–	45.8	45.8
60"		–	–	41.3	41.3
24"	126"	34.8	34.8	80.0	93.5
30"		27.9	27.9	74.8	74.8
36"		23.2	23.2	62.4	62.4
42"		–	–	53.5	53.5
48"		–	–	46.8	46.8
54"		–	–	41.6	41.6

NOTE:
INTERPOLATION BETWEEN WIDTHS OR HEIGHTS ALLOWED.

MULLION LOAD CAPACITY – PSF WITH INTERMEDIATE HORIZONTALS

NOMINAL DIMS.		WITHOUT REINFORCING		WITH REINFORCING	
WIDTH (W)	FRAME HEIGHT	EXT.(+)	INT.(–)	EXT.(+)	INT.(–)
24"	132"	30.3	30.3	80.0	85.2
30"		24.2	24.2	68.2	68.2
36"		–	–	56.8	56.8
42"		–	–	48.7	48.7
48"		–	–	42.6	42.6
54"		–	–	37.9	37.9
24"	138"	26.5	26.5	78.0	78.0
30"		21.2	21.2	62.4	62.4
36"		–	–	52.0	52.0
42"		–	–	44.6	44.6
48"		–	–	39.0	39.0
24"	144"	23.3	23.3	71.6	71.6
30"		18.7	18.7	57.3	57.3
36"		–	–	47.7	47.7
42"		–	–	40.9	40.9
48"		–	–	35.8	35.8

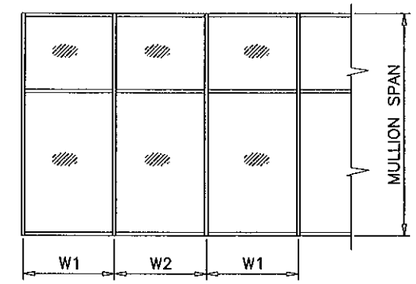

$$\text{WIDTH (W)} = \frac{W1 + W2}{2}$$

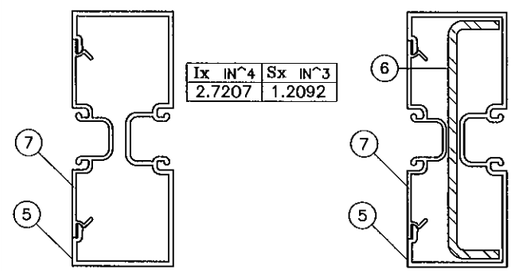

Ix IN^4	Sx IN^3
2.7207	1.2092

	Ix IN^4	Sx IN^3
ALUMINUM	2.7207	1.2092
STEEL	2.0697	.9856
TOTAL Ix ALUM + Ix STL X 2.9	8.7228	

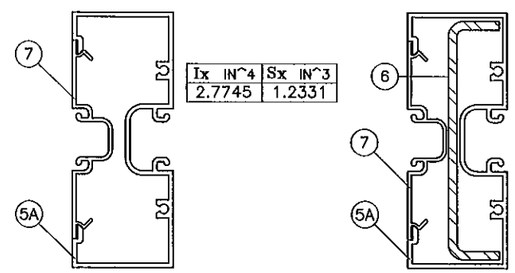

Ix IN^4	Sx IN^3
2.7745	1.2331

	Ix IN^4	Sx IN^3
ALUMINUM	2.7745	1.2331
STEEL	2.0697	.9856
TOTAL Ix ALUM + Ix STL X 2.9	8.7766	

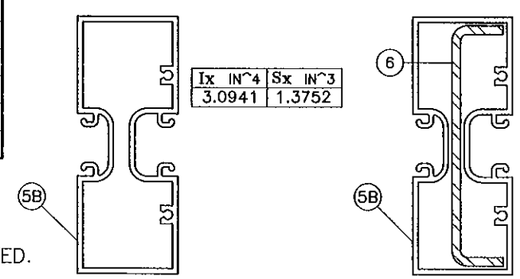

Ix IN^4	Sx IN^3
3.0941	1.3752

	Ix IN^4	Sx IN^3
ALUMINUM	3.0941	1.3752
STEEL	2.0697	.9856
TOTAL Ix ALUM + Ix STL X 2.9	9.0962	

MULLION W/O REINFORCING

MULLION W/ REINFORCING

MULLIONS

Engr: JAVAD AHMAD
CIVIL
FLA. PE # 70592
C.A.N. 3538

AUG 02 2011

Approved as complying with the Florida Building Code
Date AUG 18 2011
NOA# 11-0415.01
Miami Dade Product Control
By Manuel Perez

AL-FAROOQ CORPORATION
ENGINEERS & PRODUCT DEVELOPMENT
1235 S.W. 87 AVE
MIAMI, FLORIDA 33174
TEL. (305) 264-8100 FAX. (305) 262-6978

STORE\W11-09DD

SERIES-DSF450 ALUM STOREFRONT SYSTEM (N.I.)

CRL IMPACT DOORS, INC
d/b/a DELTA DOORS
7500 N.W. 69TH AVE.
MIAMI, FL 33166
TEL (305) 888-0077 FAX. (305) 884-3111

revisions:

no	date	by	description
A	07.28.11		REV. PER BNC COMMENTS

date: 02-25-11
scale: –
dr. by: HAMID
chk. by:

drawing no.
W11-09

ANCHOR LOAD CAPACITY – PSF
EXT.(+) & INT.(–)

NOMINAL DIMS.		3/8" SHIM SPACE			1/4" SHIM SPACE	
WIDTH (W)	FRAME HEIGHT	A2/B2	C2	A3/B3	A2/B2	A3/B3/C2
24"	60"	120.0	120.0	120.0	120.0	120.0
30"		120.0	120.0	120.0	120.0	120.0
36"		120.0	120.0	120.0	120.0	120.0
42"		120.0	120.0	120.0	120.0	120.0
48"		120.0	120.0	120.0	120.0	120.0
54"		112.0	120.0	120.0	120.0	120.0
60"		115.2	120.0	120.0	120.0	120.0
66"		104.7	120.0	120.0	120.0	120.0
72"		108.0	120.0	120.0	120.0	120.0
24"	66"	120.0	120.0	120.0	120.0	120.0
30"		120.0	120.0	120.0	120.0	120.0
36"		120.0	120.0	120.0	120.0	120.0
42"		112.2	120.0	120.0	120.0	120.0
48"		114.5	120.0	120.0	120.0	120.0
54"		101.8	120.0	120.0	120.0	120.0
60"		104.7	120.0	120.0	120.0	120.0
66"		95.2	120.0	119.0	120.0	120.0
72"		98.2	120.0	120.0	120.0	120.0
24"	72"	120.0	120.0	120.0	120.0	120.0
30"		120.0	120.0	120.0	120.0	120.0
36"		120.0	120.0	120.0	120.0	120.0
42"		102.9	120.0	120.0	120.0	120.0
48"		105.0	120.0	120.0	120.0	120.0
54"		93.3	120.0	120.0	117.7	120.0
60"		96.0	120.0	120.0	120.0	120.0
66"		87.3	120.0	109.1	110.1	120.0
72"		90.0	120.0	110.0	113.5	120.0
24"	78"	120.0	120.0	120.0	120.0	120.0
30"		110.8	120.0	120.0	120.0	120.0
36"		110.8	120.0	120.0	120.0	120.0
42"		94.9	120.0	120.0	119.7	120.0
48"		96.9	120.0	120.0	120.0	120.0
54"		86.2	119.2	110.8	108.6	120.0
60"		88.6	120.0	110.8	111.8	120.0
66"		80.6	111.4	100.7	101.6	120.0
72"		83.1	114.9	101.5	104.8	120.0
24"	84"	120.0	120.0	120.0	120.0	120.0
30"		102.9	120.0	120.0	120.0	120.0
36"		102.9	120.0	120.0	120.0	120.0
42"		88.2	120.0	117.6	111.2	120.0
48"		90.0	120.0	115.7	113.5	120.0
54"		80.0	110.7	102.9	100.9	120.0
60"		82.3	113.8	102.9	103.8	120.0
66"		74.8	103.5	93.5	94.3	117.9
72"		77.1	106.7	94.3	97.3	118.9
24"	90"	120.0	120.0	120.0	120.0	120.0
30"		96.0	120.0	120.0	120.0	120.0
36"		96.0	120.0	120.0	120.0	120.0
42"		82.3	113.8	109.7	103.8	120.0
48"		84.0	116.2	108.0	105.9	120.0
54"		74.7	103.3	96.0	94.2	120.0
60"		76.8	106.2	96.0	96.9	120.0
66"		69.8	96.6	87.3	88.0	110.1
72"		72.0	99.6	88.0	90.8	111.0

ANCHOR LOAD CAPACITY – PSF
EXT.(+) & INT.(–)

NOMINAL DIMS.		3/8" SHIM SPACE			1/4" SHIM SPACE	
WIDTH (W)	FRAME HEIGHT	A2/B2	C2	A3/B3	A2/B2	A3/B3/C2
24"	96'	112.5	120.0	120.0	120.0	120.0
30"		90.0	120.0	120.0	113.5	120.0
36"		90.0	120.0	120.0	113.5	120.0
42"		77.1	106.7	102.9	97.3	120.0
48"		78.8	108.9	101.3	99.3	120.0
54"		70.0	96.8	90.0	88.3	113.5
60"		72.0	99.6	90.0	90.8	113.5
66"		65.5	90.5	81.8	82.5	103.2
72"		67.5	93.4	82.5	85.1	104.0
24"	102"	105.9	120.0	120.0	120.0	120.0
30"		84.7	117.2	118.6	106.8	120.0
36"		84.7	117.2	112.9	106.8	120.0
42"		72.6	100.4	96.8	91.6	120.0
48"		74.1	102.5	95.3	93.5	120.0
54"		65.9	91.1	84.7	83.1	106.8
60"		67.8	93.7	84.7	85.5	106.8
66"		61.6	85.2	77.0	77.7	97.1
24"	108"	100.0	120.0	120.0	120.0	120.0
30"		80.0	110.7	112.0	100.9	120.0
36"		80.0	110.7	106.7	100.9	120.0
42"		68.6	94.9	91.4	86.5	115.3
48"		70.0	96.8	90.0	88.3	113.5
54"		62.2	86.1	80.0	78.5	100.9
60"		64.0	88.5	80.0	80.7	100.9
66"		58.2	80.5	72.7	73.4	91.7
24"	114"	94.7	120.0	120.0	119.5	120.0
30"		75.8	104.8	106.1	95.6	120.0
36"		75.8	104.8	101.1	95.6	120.0
42"		65.0	89.9	86.6	81.9	109.2
48"		66.3	91.7	85.3	83.6	107.5
54"		58.9	81.5	75.8	74.3	95.6
60"		60.6	83.9	75.8	76.5	95.6
24"	120"	90.0	120.0	120.0	113.5	120.0
30"		72.0	99.6	100.8	90.8	120.0
36"		72.0	99.6	96.0	90.8	120.0
42"		61.7	85.4	82.3	77.8	103.8
48"		63.0	87.2	81.0	79.5	102.2
54"		56.0	77.5	72.0	70.6	90.8
60"		57.6	79.7	72.0	72.6	90.8
24"	126"	85.7	118.6	120.0	108.1	120.0
30"		68.6	94.9	96.0	86.5	120.0
36"		68.6	94.9	91.4	86.5	115.3
42"		58.8	81.3	78.4	74.1	98.8
48"		60.0	83.0	77.1	75.7	97.3
54"		53.3	73.8	68.6	67.3	86.5
24"	132"	81.8	113.2	114.5	103.2	120.0
30"		65.5	90.5	91.6	82.5	115.6
36"		65.5	90.5	87.3	82.5	110.1
42"		56.1	77.6	74.8	70.8	94.3
48"		57.3	79.2	73.6	72.2	92.9
54"		50.9	70.4	65.5	64.2	82.5

ANCHOR LOAD CAPACITY – PSF
EXT.(+) & INT.(–)

NOMINAL DIMS.		3/8" SHIM SPACE			1/4" SHIM SPACE	
WIDTH (W)	FRAME HEIGHT	A2/B2	C2	A3/B3	A2/B2	A3/B3/C2
24"	138"	78.3	108.3	109.6	98.7	120.0
30"		62.6	86.6	87.7	79.0	110.5
36"		62.6	86.6	83.5	79.0	105.3
42"		53.7	74.2	71.6	67.7	90.2
48"		54.8	75.8	70.4	69.1	88.8
24"	144"	75.0	103.8	105.0	94.6	120.0
30"		60.0	83.0	84.0	75.7	105.9
36"		60.0	83.0	80.0	75.7	100.9
42"		51.4	71.1	68.6	64.9	86.5
48"		52.5	72.6	67.5	66.2	85.1

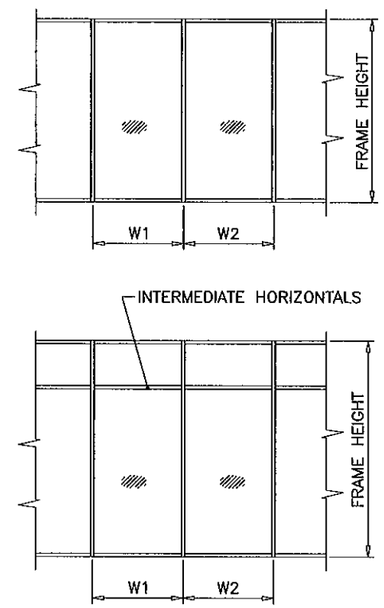

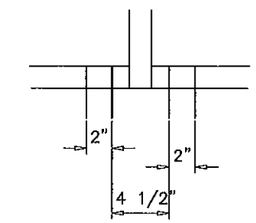

A2, B2, C2

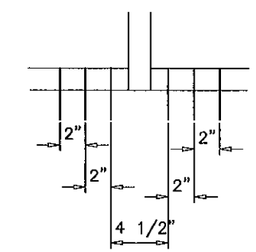

A3, B3,

$$\text{WIDTH (W)} = \frac{W1 + W2}{2}$$

ANCHORS TYPES: SEE SHEET 9 FOR DESCRIPTION

A2 = (2) ANCHORS TYPE 'A' AT EACH SIDE OF MULLION
B2 = (2) ANCHORS TYPE 'B' AT EACH SIDE OF MULLION
C2 = (2) ANCHORS TYPE 'C' AT EACH SIDE OF MULLION

A3 = (3) ANCHORS TYPE 'A' AT EACH SIDE OF MULLION
B3 = (3) ANCHORS TYPE 'B' AT EACH SIDE OF MULLION

ALL OTHER ANCHORS TO BE SPACED AS PER ELEVATION.

ANCHORS

Engr: JAVAD AHMAD
CIVIL
FLA. PE # 70592
C.A.N. 3538

AUG 02 2011

Approved as complying with the Florida Building Code
Date AUG. 18, 2011
NOA# 11-0415.01
Miami Dade Product Control
By Manuel Perez

AL-FAROOQ CORPORATION
ENGINEERS & PRODUCT DEVELOPMENT
1235 S.W. 87 AVE
MIAMI, FLORIDA 33174
TEL. (305) 264-8100 FAX. (305) 262-6978

STORE\W11-09DD

SERIES-DSF450 ALUM STOREFRONT SYSTEM (N.I.)

CRL IMPACT DOORS, INC
d/b/a DELTA DOORS
7500 N.W. 69TH AVE.
MIAMI, FL 33166
TEL. (305) 888-0077 FAX. (305) 884-3111

revisions:

no	date	by	description
A	07.28.11		REV. PER BNC COMMENTS

date: 02-25-11
scale: –
dr. by: HAMID
chk. by:

drawing no.
W11-09

DOOR MULLION LOAD CAPACITY–PSF			
WIDTH (W) INCHES	FRAME HEIGHT INCHES	WITHOUT REINF. EXT.(+) & INT.(–)	WITH REINF. EXT.(+) & INT.(–)
24	80	93.6	93.6
30		93.6	93.6
36		80.9	93.6
42		69.4	93.6
48		60.7	93.6
54		–	93.6
60		–	92.8
24	84	93.6	93.6
30		87.6	93.6
36		73.0	93.6
42		62.5	93.6
48		54.7	93.6
54		–	93.5
60		–	84.2
24	90	93.6	93.6
30		75.6	93.6
36		63.0	93.6
42		54.0	93.6
48		–	91.7
54		–	81.5
60		–	73.3
24	96	78.7	93.6
30		63.0	93.6
36		52.5	93.6
42		45.0	92.1
48		–	80.6
54		–	71.6
60		–	64.5
24	102	65.6	93.6
30		52.5	93.6
36		43.8	93.6
42		–	81.6
48		–	71.4
54		–	63.4
60		–	57.1
24	108	55.3	93.6
30		44.2	93.6
36		36.9	84.9
42		–	72.8
48		–	63.7
54		–	56.6
60		–	50.9
24	114	47.0	93.6
30		37.6	91.4
36		31.3	76.2
42		–	65.3
48		–	57.1
54		–	50.8
60		–	45.7
24	120	40.3	93.6
30		32.2	82.5
36		–	68.8
42		–	58.9
48		–	51.6
54		–	45.8
60		–	41.3

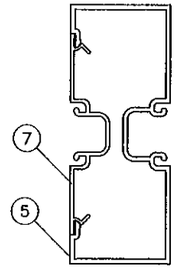

Ix IN^4	Sx IN^3
2.7207	1.2092

WITHOUT REINF.

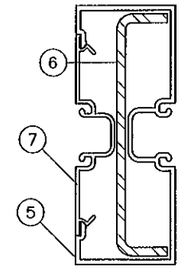

	Ix IN^4	Sx IN^3
ALUMINUM	2.7207	1.2092
STEEL	2.0697	.9856
TOTAL Ix ALUM + Ix STL X 2.9	8.7228	

WITH REINF.

ANCHOR TYPES	NO. OF ANCHORS AT DOOR MULLION			
	WITHOUT REINF.		WITH REINF.	
	3/8" SHIMS	1/4" SHIMS	3/8" SHIMS	1/4" SHIMS
A	4	4	8	6
B	4	4	8	6
C	4	2	6	4

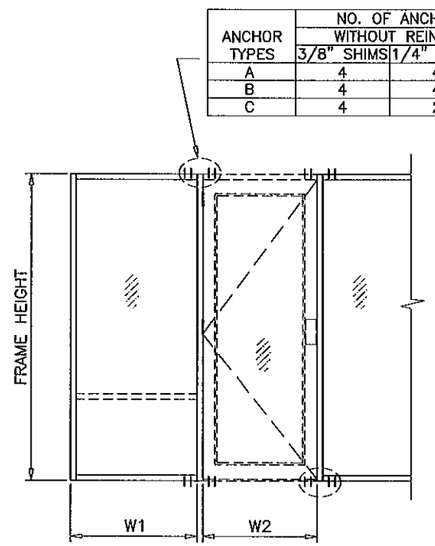

$$\text{WIDTH (W)} = \frac{W1 + W2}{2}$$

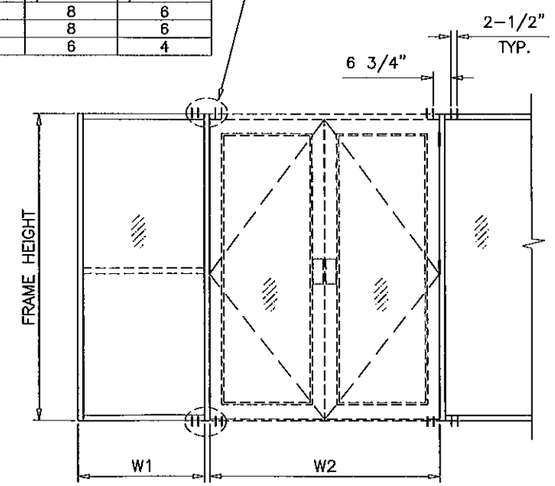

$$\text{WIDTH (W)} = \frac{W1}{2} + \frac{W2}{4}$$

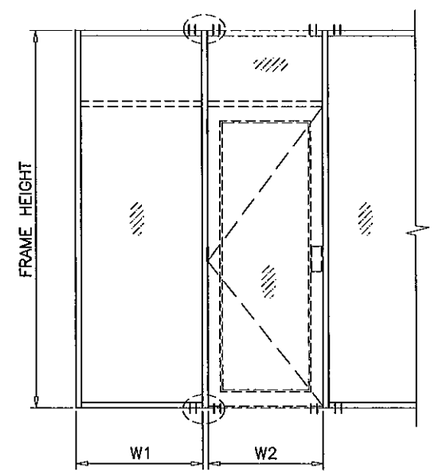

$$\text{WIDTH (W)} = \frac{W1 + W2}{2}$$

DOOR MULLION

Engr: JAVAD AHMAD
CIVIL
FLA. PE # 70592
C.A.N. 3538

AUG 02 2011

Approved as complying with the Florida Building Code
Date AUG. 18, 2011
NOA# 11-0415.01
Miami Dade Product Control
By Manuel Diaz

AL-FAROOQ CORPORATION
ENGINEERS & PRODUCT DEVELOPMENT
1235 S.W. 87 AVE
MIAMI, FLORIDA 33174
TEL. (305) 264-8100 FAX. (305) 262-6978

STORE\W11-09DD

SERIES–DSF450 ALUM STOREFRONT SYSTEM (N.I.)

CRL IMPACT DOORS, INC
d/b/a DELTA DOORS
7500 N.W. 69TH AVE.
MIAMI, FL 33166
TEL (305) 888-0077 FAX. (305) 884-3111

revisions:

no	date	by	description
A	07.28.11		REV. PER BNC COMMENTS

date: 02–25–11
scale: –
dr. by: HAMID
chk. by:

drawing no.
W11–09

DOOR MULLION LOAD CAPACITY

NOMINAL DIMS.				LOADS–PSF
DOOR WIDTH W2	SIDELITE WIDTH W1	DOOR HEIGHT A	FRAME SPAN L	EXT. (+) INT. (–)
60"	30"	80"	90"	93.6
	33"			93.6
	36"			93.6
	39"			93.6
	42"			93.6
	45"			93.6
	48"			93.3
72"	30"			93.6
	33"			93.6
	36"			93.6
	39"			91.3
	42"			88.8
	45"			86.5
	48"			84.3
60"	30"	80"	96"	93.6
	33"			93.6
	36"			93.6
	39"			93.6
	42"			92.0
	45"			88.9
	48"			85.9
72"	30"			93.6
	33"			92.4
	36"			89.7
	39"			86.7
	42"			84.0
	45"			81.3
	48"			78.8
60"	30"	80"	102"	90.9
	33"			87.5
	36"			84.3
	39"			81.3
	42"			78.5
	45"			75.9
	48"			73.5
72"	30"			81.4
	33"			78.7
	36"			76.1
	39"			73.6
	42"			71.4
	45"			69.2
	48"			67.2
60"	30"	80"	108"	78.1
	33"			75.2
	36"			72.6
	39"			70.1
	42"			67.8
	45"			65.7
	48"			63.6
72"	30"			69.7
	33"			67.4
	36"			65.3
	39"			63.3
	42"			61.4
	45"			59.7
	48"			58.0

DOOR MULLION LOAD CAPACITY

NOMINAL DIMS.				LOADS–PSF
DOOR WIDTH W2	SIDELITE WIDTH W1	DOOR HEIGHT A	FRAME SPAN L	EXT. (+) INT. (–)
60"	30"	80"	114"	67.8
	33"			65.4
	36"			63.2
	39"			61.1
	42"			59.2
	45"			57.3
	48"			55.6
72"	30"			60.3
	33"			58.5
	36"			56.7
	39"			55.0
	42"			53.4
	45"			51.9
	48"			50.5
60"	30"	80"	120"	59.4
	33"			57.4
	36"			55.5
	39"			53.7
	42"			52.1
	45"			50.5
	48"			49.0
72"	30"			52.8
	33"			51.2
	36"			49.7
	39"			48.2
	42"			46.9
	45"			45.6
	48"			44.4

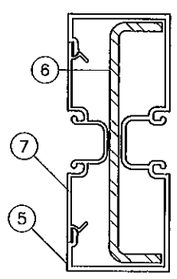

	Ix IN^4	Sx IN^3
ALUMINUM	2.7207	1.2092
STEEL	2.0697	.9856
TOTAL Ix ALUM + Ix STL X 2.9	8.7228	

DOOR MULLION
W/ REINFORCING

DOOR MULLION LOAD CAPACITY

NOMINAL DIMS.				LOADS–PSF
DOOR WIDTH W2	SIDELITE WIDTH W1	DOOR HEIGHT A	FRAME SPAN L	EXT. (+) INT. (–)
60"	30"	84"	90"	93.6
	33"			93.6
	36"			93.6
	39"			93.6
	42"			93.6
	45"			93.6
	48"			92.1
72"	30"			93.6
	33"			93.6
	36"			92.5
	39"			90.0
	42"			87.6
	45"			85.3
	48"			83.2
60"	30"	84"	96"	93.6
	33"			93.6
	36"			93.6
	39"			93.6
	42"			93.1
	45"			90.3
	48"			87.8
72"	30"			93.6
	33"			91.0
	36"			88.4
	39"			86.0
	42"			83.6
	45"			81.5
	48"			79.4
60"	30"	84"	102"	93.6
	33"			90.4
	36"			87.0
	39"			83.9
	42"			80.9
	45"			78.2
	48"			75.6
72"	30"			84.6
	33"			81.6
	36"			78.8
	39"			76.2
	42"			73.7
	45"			71.4
	48"			69.3
60"	30"	84"	108"	80.7
	33"			77.6
	36"			74.8
	39"			72.2
	42"			69.7
	45"			67.4
	48"			65.3
72"	30"			72.2
	33"			69.7
	36"			67.5
	39"			65.3
	42"			63.3
	45"			61.4
	48"			59.6

DOOR MULLION LOAD CAPACITY

NOMINAL DIMS.				LOADS–PSF
DOOR WIDTH W2	SIDELITE WIDTH W1	DOOR HEIGHT A	FRAME SPAN L	EXT. (+) INT. (–)
60"	30"	84"	114"	69.8
	33"			67.3
	36"			65.0
	39"			62.7
	42"			60.7
	45"			58.8
	48"			57.0
72"	30"			62.3
	33"			60.3
	36"			58.4
	39"			56.6
	42"			55.0
	45"			53.4
	48"			51.9
60"	30"	84"	120"	61.1
	33"			58.9
	36"			56.9
	39"			55.1
	42"			53.3
	45"			51.7
	48"			50.1
72"	30"			54.4
	33"			52.7
	36"			51.1
	39"			49.6
	42"			48.2
	45"			46.8
	48"			45.6

ANCHOR TYPES	NO. OF ANCHORS AT DOOR MULLION	
	3/8" SHIMS	1/4" SHIMS
A	8	6
B	8	6
C	6	4

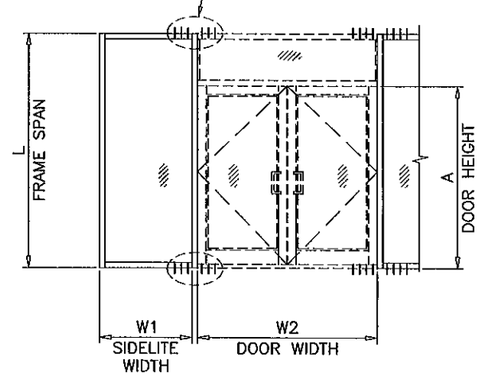

DOOR MULLION

Engr: JAVAD AHMAD
CIVIL
FLA. PE # 70592
C.A.N. 3538

AUG 0 2 2011

Approved as complying with the Florida Building Code
Date AUG. 18, 2011
NOA# 11-0415.01
Miami Dade Product Control
By Hamid Sere

AL-FAROOQ CORPORATION
ENGINEERS & PRODUCT DEVELOPMENT
1235 S.W. 87 AVE
MIAMI, FLORIDA 33174
TEL. (305) 264-8100 FAX. (305) 262-6978

STORE\W11-09DD

SERIES-DSF450 ALUM STOREFRONT SYSTEM (N.I.)

CRL IMPACT DOORS, INC
d/b/a DELTA DOORS
7500 N.W. 69TH AVE.
MIAMI, FL 33166
TEL (305) 888-0077 FAX. (305) 884-3111

revisions:

no.	date	by	description
A	07.28.11		REV. PER BNC COMMENTS

date: D2-25-11
scale: –
dr. by: HAMID
chk. by:

drawing no.
W11-09

DOOR MULLION LOAD CAPACITY				
NOMINAL DIMS.				LOADS-PSF
DOOR WIDTH W2	SIDELITE WIDTH W1	DOOR HEIGHT A	FRAME SPAN L	EXT. (+) INT. (-)
60"	30"	90"	90"	93.6
	33"			93.6
	36"			93.6
	39"			93.6
	42"			91.3
	45"			88.7
	48"			86.3
72"	30"			91.7
	33"			89.1
	36"			86.6
	39"			84.2
	42"			82.0
	45"			79.9
	48"			77.9
60"	30"	90"	96"	93.6
	33"			93.6
	36"			91.4
	39"			87.9
	42"			84.6
	45"			81.6
	48"			78.8
72"	30"			88.0
	33"			85.4
	36"			83.0
	39"			80.2
	42"			77.5
	45"			75.0
	48"			72.6
60"	30"	90"	102"	84.7
	33"			81.4
	36"			78.3
	39"			75.4
	42"			72.7
	45"			70.2
	48"			67.9
72"	30"			76.2
	33"			73.4
	36"			70.9
	39"			68.5
	42"			66.3
	45"			64.2
	48"			62.3
60"	30"	90"	108"	73.1
	33"			70.4
	36"			67.7
	39"			65.4
	42"			63.1
	45"			61.0
	48"			59.1
72"	30"			65.5
	33"			63.3
	36"			61.2
	39"			59.2
	42"			57.4
	45"			55.6
	48"			54.0

DOOR MULLION LOAD CAPACITY				
NOMINAL DIMS.				LOADS-PSF
DOOR WIDTH W2	SIDELITE WIDTH W1	DOOR HEIGHT A	FRAME SPAN L	EXT. (+) INT. (-)
60"	30"	90"	114"	63.7
	33"			61.4
	36"			59.3
	39"			57.2
	42"			55.3
	45"			53.5
	48"			51.9
72"	30"			56.9
	33"			55.1
	36"			53.3
	39"			51.7
	42"			50.1
	45"			48.7
	48"			47.3

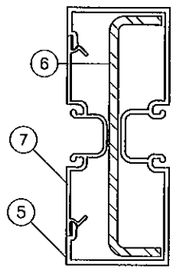

	Ix IN^4	Sx IN^3
ALUMINUM	2.7207	1.2092
STEEL	2.0697	.9856
TOTAL Ix ALUM + Ix STL X 2.9	8.7228	

DOOR MULLION
W/ REINFORCING

DOOR MULLION LOAD CAPACITY				
NOMINAL DIMS.				LOADS-PSF
DOOR WIDTH W2	SIDELITE WIDTH W1	DOOR HEIGHT A	FRAME SPAN L	EXT. (+) INT. (-)
60"	30"	96"	90"	93.6
	33"			93.6
	36"			91.2
	39"			88.5
	42"			85.9
	45"			83.4
	48"			81.1
72"	30"			86.2
	33"			83.7
	36"			81.4
	39"			79.2
	42"			77.1
	45"			75.1
	48"			73.2
60"	30"	96"	96"	89.1
	33"			85.4
	36"			82.0
	39"			78.8
	42"			75.9
	45"			73.1
	48"			70.6
72"	30"			80.4
	33"			77.4
	36"			74.6
	39"			72.0
	42"			69.5
	45"			67.2
	48"			65.1
60"	30"	96"	102"	76.6
	33"			73.6
	36"			70.7
	39"			68.1
	42"			65.7
	45"			63.4
	48"			61.3
72"	30"			68.9
	33"			66.5
	36"			64.1
	39"			62.0
	42"			59.9
	45"			58.1
	48"			56.3
60"	30"	96"	108"	66.6
	33"			64.1
	36"			61.7
	39"			59.5
	42"			57.4
	45"			55.5
	48"			53.7
72"	30"			59.7
	33"			57.7
	36"			55.7
	39"			53.9
	42"			52.2
	45"			50.6
	48"			49.1

DOOR MULLION

ANCHOR TYPES	NO. OF ANCHORS AT DOOR MULLION	
	3/8" SHIMS	1/4" SHIMS
A	8	6
B	8	6
C	6	4

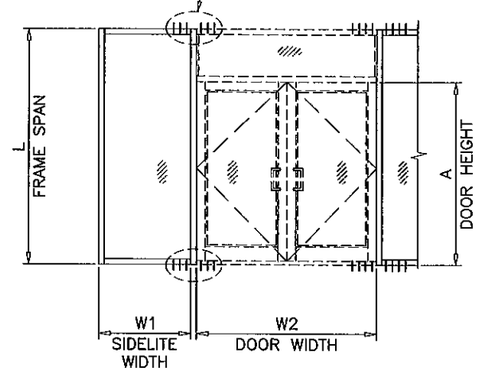

Engr: JAVAD AHMAD
CIVIL
FLA. PE # 70592
C.A.N. 3538

AUG 02 2011

Approved as complying with the Florida Building Code
Date AUG. 18, 2011
NOA# 11-0415.01
Miami Dade Product Control
By Manuel Serra

AL-FAROOQ CORPORATION
ENGINEERS & PRODUCT DEVELOPMENT
1235 S.W. 87 AVE
MIAMI, FLORIDA 33174
TEL. (305) 264-8100 FAX. (305) 262-6978

STORE\W11-09DD

SERIES-DSF450 ALUM. STOREFRONT SYSTEM (N.I.)

CRL IMPACT DOORS, INC
d/b/a DELTA DOORS
7500 N.W. 69TH AVE.
MIAMI, FL 33166
TEL (305) 888-0077 FAX. (305) 884-3111

revisions:

no	date	by	description
A	07.28.11		REV. PER BNC COMMENTS

date: 02-25-11
scale: -
dr. by: HAMID
chk. by:

drawing no.
W11-09

sheet 8 of 11

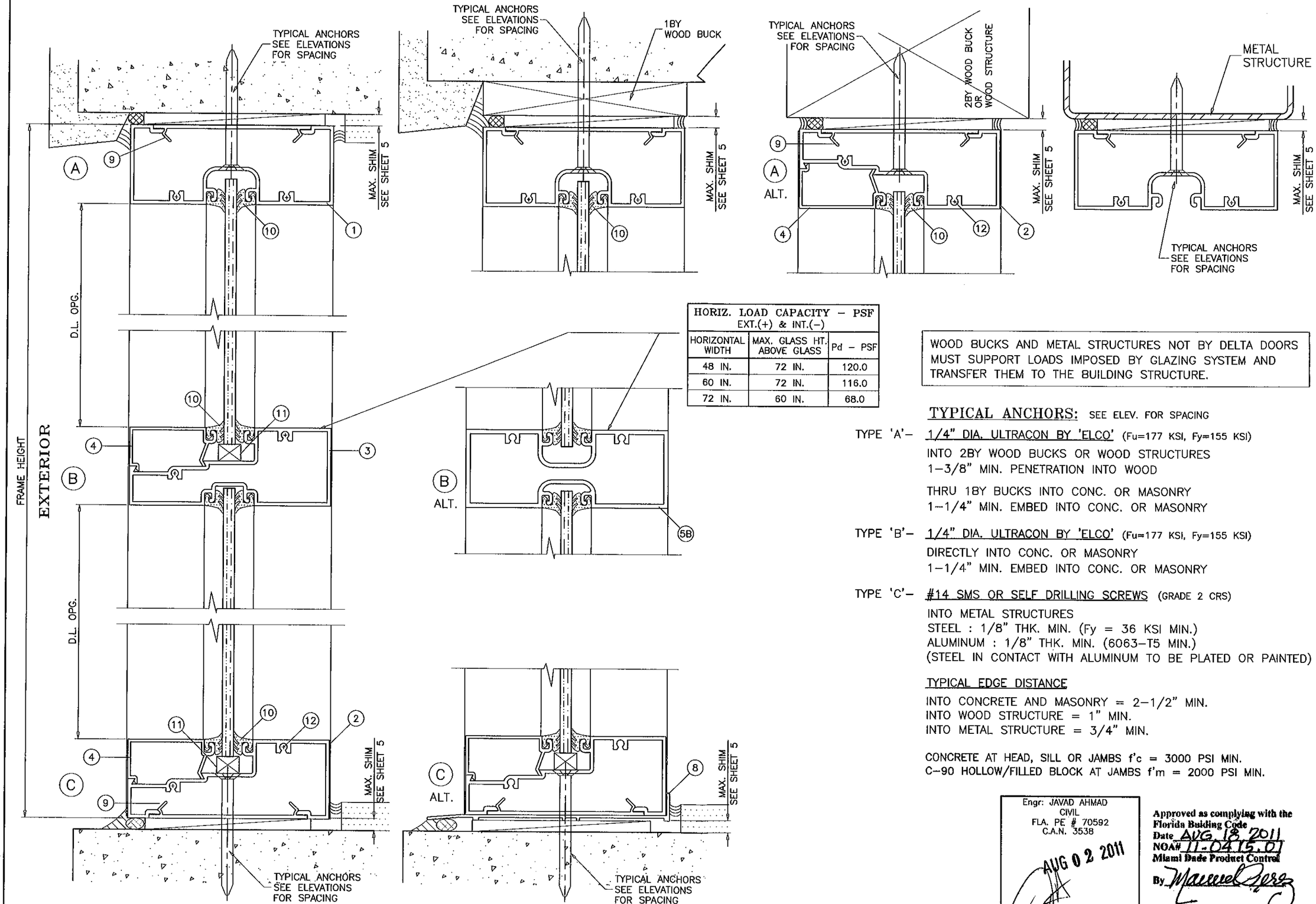

HORIZ. LOAD CAPACITY – PSF EXT.(+) & INT.(–)		
HORIZONTAL WIDTH	MAX. GLASS HT. ABOVE GLASS	Pd – PSF
48 IN.	72 IN.	120.0
60 IN.	72 IN.	116.0
72 IN.	60 IN.	68.0

WOOD BUCKS AND METAL STRUCTURES NOT BY DELTA DOORS MUST SUPPORT LOADS IMPOSED BY GLAZING SYSTEM AND TRANSFER THEM TO THE BUILDING STRUCTURE.

TYPICAL ANCHORS: SEE ELEV. FOR SPACING

TYPE 'A'– 1/4" DIA. ULTRACON BY 'ELCO' (Fu=177 KSI, Fy=155 KSI)
INTO 2BY WOOD BUCKS OR WOOD STRUCTURES
1–3/8" MIN. PENETRATION INTO WOOD

THRU 1BY BUCKS INTO CONC. OR MASONRY
1–1/4" MIN. EMBED INTO CONC. OR MASONRY

TYPE 'B'– 1/4" DIA. ULTRACON BY 'ELCO' (Fu=177 KSI, Fy=155 KSI)
DIRECTLY INTO CONC. OR MASONRY
1–1/4" MIN. EMBED INTO CONC. OR MASONRY

TYPE 'C'– #14 SMS OR SELF DRILLING SCREWS (GRADE 2 CRS)
INTO METAL STRUCTURES
STEEL : 1/8" THK. MIN. (Fy = 36 KSI MIN.)
ALUMINUM : 1/8" THK. MIN. (6063–T5 MIN.)
(STEEL IN CONTACT WITH ALUMINUM TO BE PLATED OR PAINTED)

TYPICAL EDGE DISTANCE
INTO CONCRETE AND MASONRY = 2–1/2" MIN.
INTO WOOD STRUCTURE = 1" MIN.
INTO METAL STRUCTURE = 3/4" MIN.

CONCRETE AT HEAD, SILL OR JAMBS f'c = 3000 PSI MIN.
C–90 HOLLOW/FILLED BLOCK AT JAMBS f'm = 2000 PSI MIN.

Engr: JAVAD AHMAD
CIVIL
FLA. PE # 70592
C.A.N. 3538
AUG 02 2011

Approved as complying with the Florida Building Code
Date AUG. 18, 2011
NOA# 11-0415.01
Miami Dade Product Control
By Manuel Perez

AL-FAROOQ CORPORATION
ENGINEERS & PRODUCT DEVELOPMENT
1235 S.W. 87 AVE
MIAMI, FLORIDA 33174
TEL. (305) 264-8100 FAX. (305) 262-6978

STORE\W11–09DD

SERIES–DSF450 ALUM STOREFRONT SYSTEM (N.I.)

CRL IMPACT DOORS, INC
d/b/a DELTA DOORS
7500 N.W. 69TH AVE.
MIAMI, FL 33166
TEL. (305) 888–0077 FAX. (305) 884–3111

revisions:

no	date	by	description
A	07.28.11		REV. PER BNC COMMENTS

date: 02–25–11
scale: 1/2" = 1"
dr. by: HAMID
chk. by:

drawing no.
W11–09

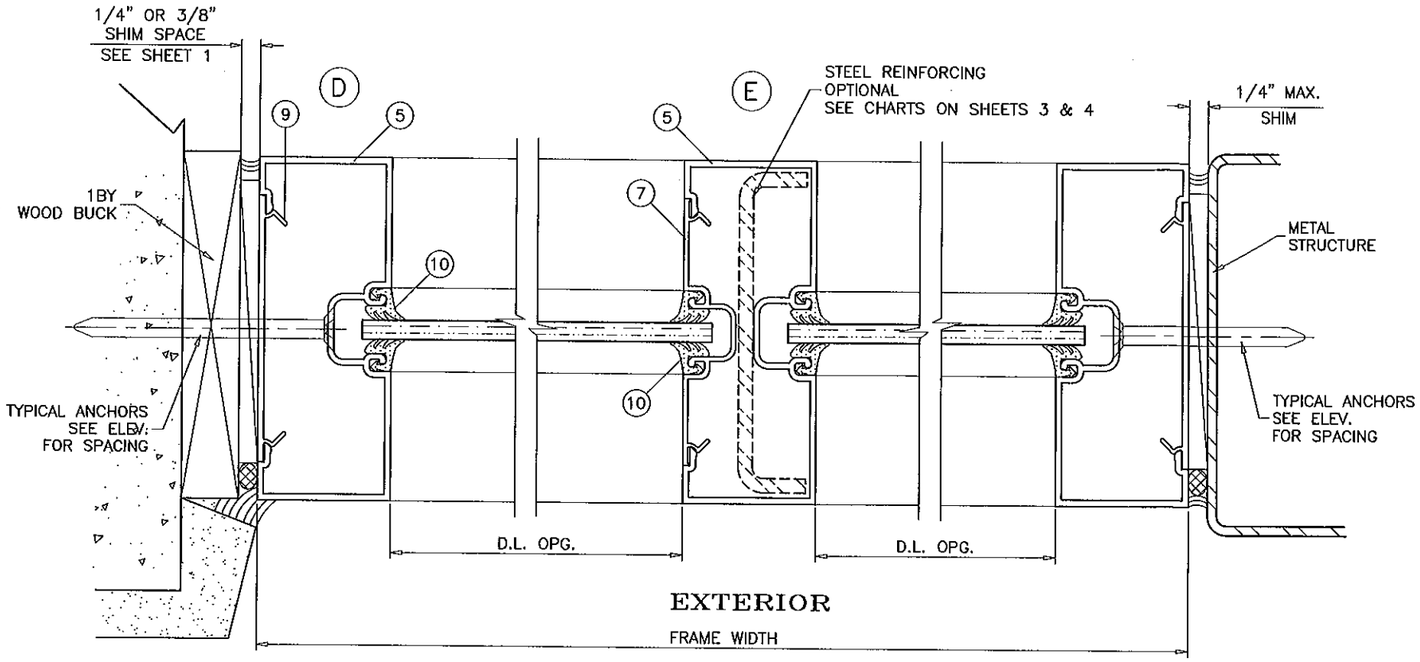

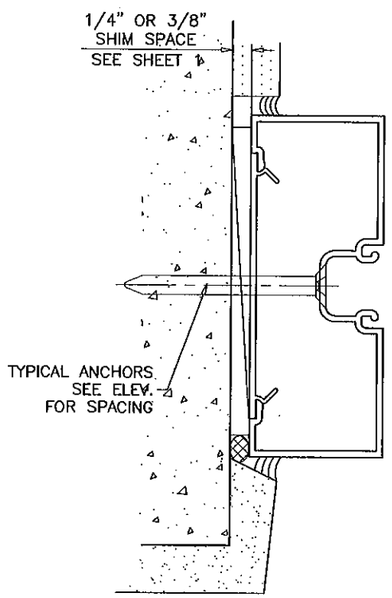

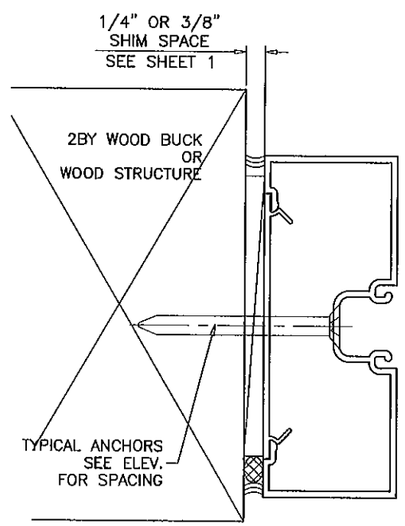

Engr: JAVAD AHMAD
CIVIL
FLA. PE # 70592
C.A.N. 3538

AUG 0 2 2011

Approved as complying with the Florida Building Code
Date AUG. 18, 2011
NOA# 11-0415.01
Miami Dade Product Control
By Manuel Perez

AL-FAROOQ CORPORATION
ENGINEERS & PRODUCT DEVELOPMENT
1235 S.W. 87 AVE
MIAMI, FLORIDA 33174
TEL. (305) 264-8100 FAX. (305) 262-6978

STORE\W11-09DD

SERIES-DSF450 ALUM STOREFRONT SYSTEM (N.I.)

CRL IMPACT DOORS, INC
d/b/a DELTA DOORS
7500 N.W. 69TH AVE.
MIAMI, FL 33166
TEL. (305) 888-0077 FAX. (305) 884-3111

revisions:

no	date	by	description
A	07.28.11		REV. PER BNC COMMENTS

date: 02-25-11
scale: 1/2" = 1"
dr. by: HAMIO
chk. by:

drawing no.
W11-09

ITEM NO.	PART NUMBER	QUANTITY	DESCRIPTION	MATERIAL	MANF./SUPPLIER/REMARKS
1	BCE-5451	AS REQD.	FRAME HEAD	6063-T6	–
2	BCE-5457	AS REQD.	FRAME HORIZONTAL/SILL	6063-T5	–
3	BCE-5458	AS REQD.	FRAME HORIZONTAL	6063-T6	–
4	BCE-459	AS REQD.	GLAZING STOP	6063-T5	–
5	BC-5450	AS REQD.	FRAME JAMB/MULLION	6063-T6	–
5A	BCE-5451	AS REQD.	ALT. FRAME MULLION	6063-T6	–
5B	BCE-452	AS REQD.	ALT. FRAME MULLION/HORIZONTAL	6063-T6	–
6	–	AS REQD.	REINFORCING CHANNEL	STEEL	ASTM A36, Fy=36 KSI MIN.
7	BCE-5430	AS REQD.	POCKET FILLER	6063-T6	–
8	–	OPTIONAL	SILL FLASHING	6063-T5	–
9	BCE-475	AS REQD.	SNAP IN COVER, 2-1/2" LONG	6063-T6	–
10	–	AS REQD.	GLAZING GASKET	NEOPRENE	–
11	–	AS REQD.	SETTING BLOCK AT 1/4" POINTS	NEOPRENE	7/16" X 3/4" X 1-7/8" LONG
12	#10 X 1-1/4"	2/ CORNER	ASSEMBLY SCREWS PHSMS	STEEL	–

(F)

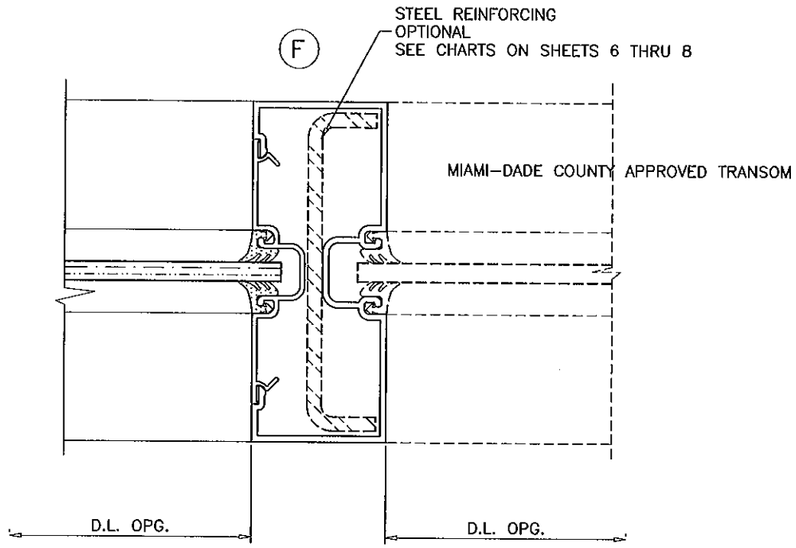

(G)

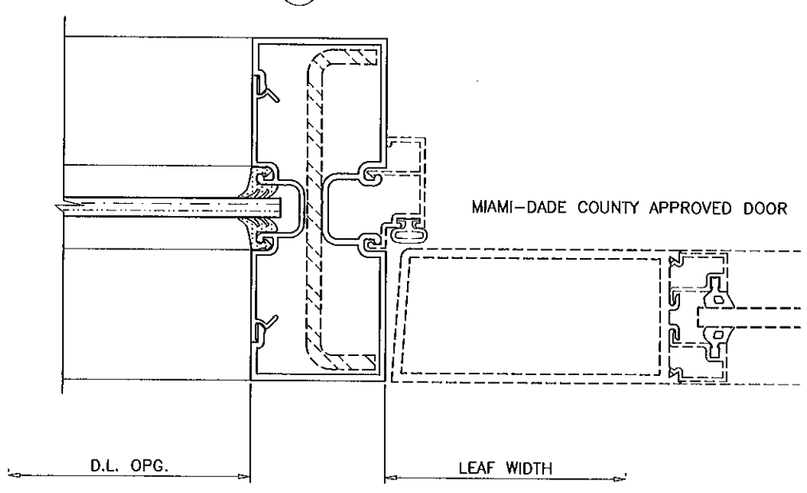

SEALANTS:

ALL FRAME CORNERS AND MULLION SEAMS SEALED WITH SILICONE.

SEE SEPARATE NOA FOR DESIGN LOAD CAPACITY OF DOORS AND DOOR ANCHORS.

LOWER VALUES FROM DOORS NOA OR STOREFRONT SYSTEM CAPACITY CHARTS WILL APPLY TO ENTIRE SYSTEM.

Engr: JAVAD AHMAD
CIVIL
FLA. PE # 70592
C.A.N. 3538

AUG 02 2011

Approved as complying with the Florida Building Code
Date AUG. 18, 2011
NOA# 11-0415.01
Miami Dade Product Control
By Manuel Perez

AL-FAROOQ CORPORATION
ENGINEERS & PRODUCT DEVELOPMENT
1235 S.W. 87 AVE
MIAMI, FLORIDA 33174
TEL. (305) 264-8100 FAX. (305) 262-6978

STORE\W11-09DD

SERIES-DSF450 ALUM STOREFRONT SYSTEM (N.I.)

CRL IMPACT DOORS, INC
d/b/a DELTA DOORS
7500 N.W. 69TH AVE.
MIAMI, FL 33166
TEL (305) 888-0077 FAX. (305) 884-3111

revisions:

no	date	by	description
A	07.28.11		REV. PER BNC COMMENTS

date: 02-25-11
scale: 1/2" = 1"
dr. by: HAMID
chk. by:

drawing no.
W11-09

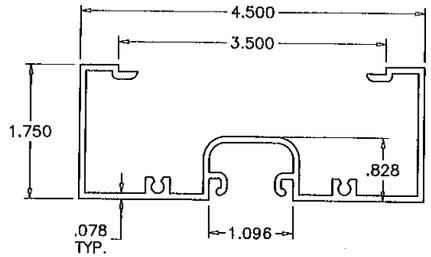

(1)(5A) FRAME HEAD/MULLION

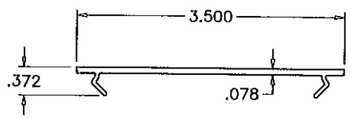

(9) SNAP IN COVER

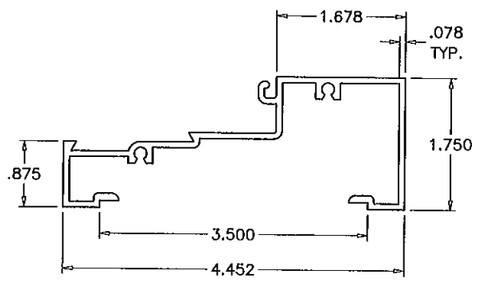

(2) FRAME SILL

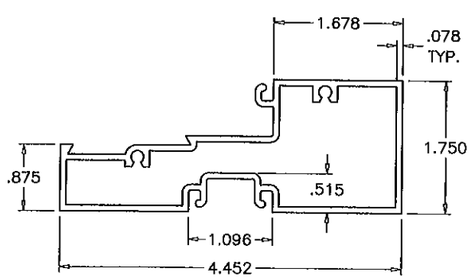

(3) FRAME HORIZONTAL

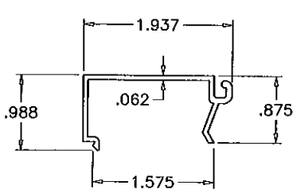

(4) GLAZING STOP

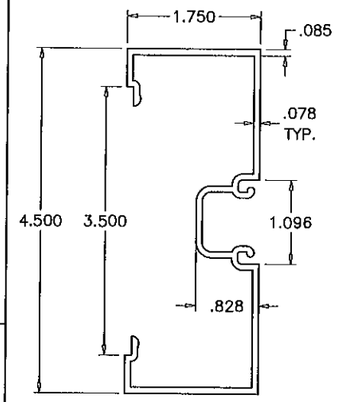

(5) FRAME JAMB/MULLION

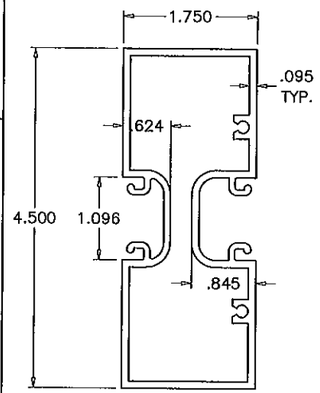

(5B) MULLION/HORIZONTAL

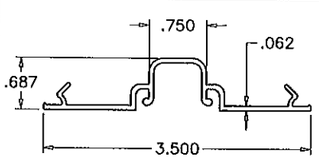

(7) POCKET FILLER

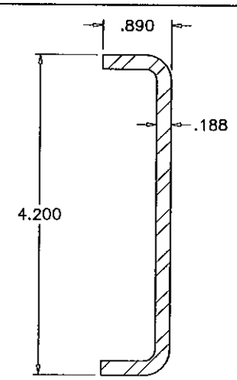

(6) STEEL REINFORCING
36 KSI MIN.

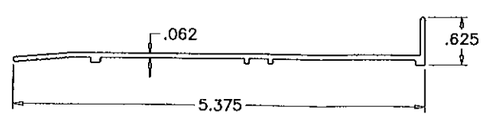

(8) SILL FLASHING (OPTIONAL)

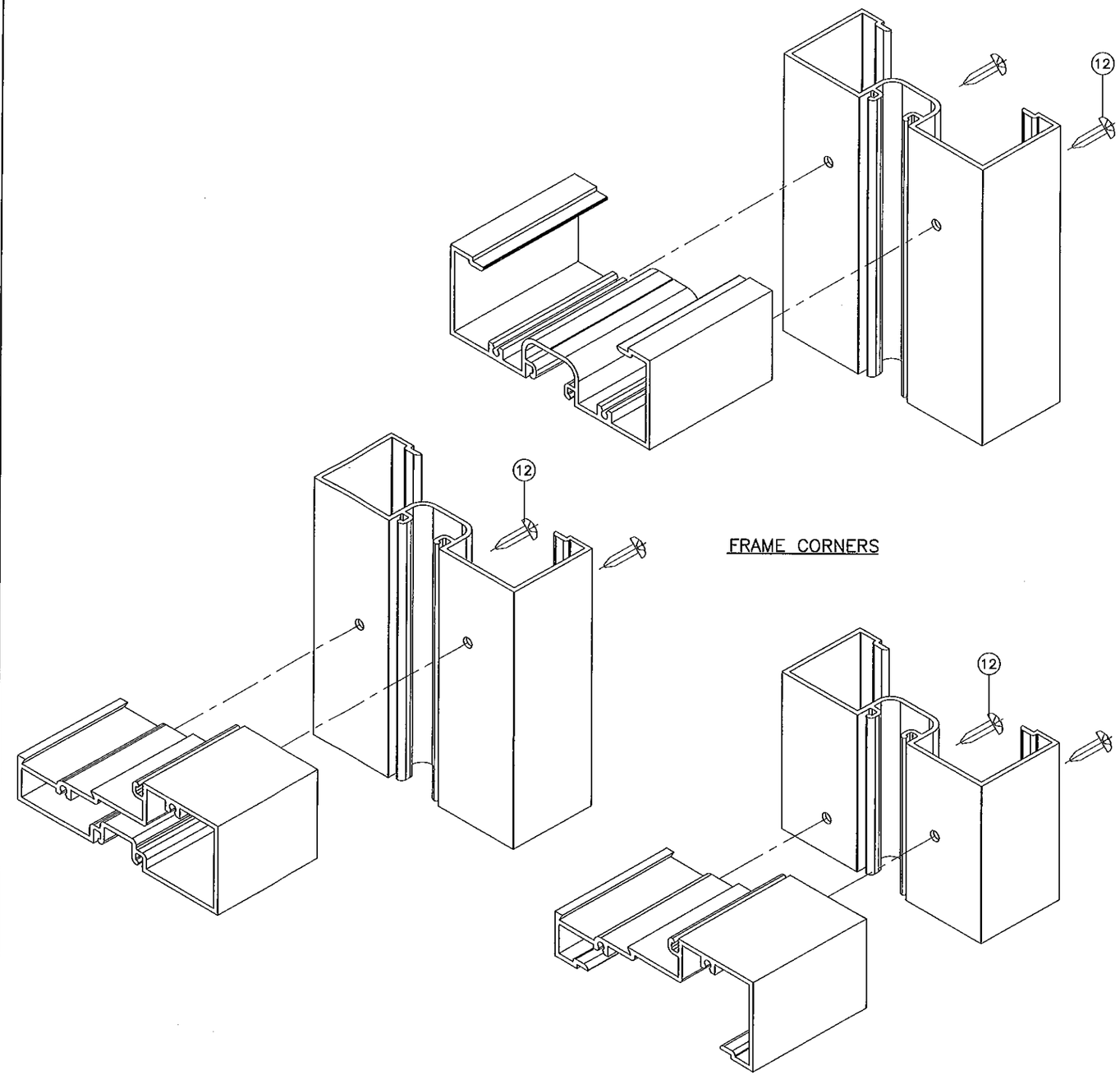

FRAME CORNERS

Engr: JAVAD AHMAD
CIVIL
FLA. PE # 70592
C.A.N. 3538

AUG 02 2011

Approved as complying with the
Florida Building Code
Date AUG. 18 2011
NOA# 11-0415.01
Miami Dade Product Control
By Manuel Perez

AL-FAROOQ CORPORATION
ENGINEERS & PRODUCT DEVELOPMENT
1235 S.W. 87 AVE
MIAMI, FLORIDA 33174
TEL. (305) 264-8100 FAX. (305) 262-6978

STORE\W11-09DD

SERIES-DSF450 ALUM STOREFRONT SYSTEM (N.I.)

CRL IMPACT DOORS, INC
d/b/a DELTA DOORS
7500 N.W. 69TH AVE.
MIAMI, FL 33166
TEL. (305) 888-0077 FAX. (305) 884-3111

revisions:

no	date	by	description
A	07.28.11		REV. PER BNC COMMENTS

date: 02-25-11
scale: 1/2" = 1"
dr. by: HAMID
chk. by:

drawing no.
W11-09

sheet 12 of 12