MIAMI-DADE COUNTY

BUILDING AND NEIGHBORHOOD COMPLIANCE DEPARTMENT (BNC)
BOARD AND CODE ADMINISTRATION DIVISION

MIAMI-DADE COUNTY
PRODUCT CONTROL SECTION
11805 SW 26 Street, Room 208
Miami, Florida 33175-2474
T (786) 315-2590 F (786) 315-2599
www.miamidade.gov/building/

NOTICE OF ACCEPTANCE (NOA)

W.H. Maze Company
100 Church Street
Peru, IL 61354

SCOPE:

This NOA is being issued under the applicable rules and regulations governing the use of construction materials. The documentation submitted has been reviewed and accepted by Miami-Dade County BNC - Product Control Section to be used in Miami Dade County and other areas where allowed by the Authority Having Jurisdiction (AHJ).

This NOA shall not be valid after the expiration date stated below. The Miami-Dade County Product Control Section (In Miami Dade County) and/or the AHJ (in areas other than Miami Dade County) reserve the right to have this product or material tested for quality assurance purposes. If this product or material fails to perform in the accepted manner, the manufacturer will incur the expense of such testing and the AHJ may immediately revoke, modify, or suspend the use of such product or material within their jurisdiction. BNC reserves the right to revoke this acceptance, if it is determined by Miami-Dade County Product Control Section that this product or material fails to meet the requirements of the applicable building code.
This product is approved as described herein, and has been designed to comply with the Florida Building Code including the High Velocity Hurricane Zone of the Florida Building Code.

DESCRIPTION: Stormguard Nails

LABELING: Each unit shall bear a permanent label with the manufacturer's name or logo, city, state and following statement: "Miami-Dade County Product Control Approved", unless otherwise noted herein.

RENEWAL of this NOA shall be considered after a renewal application has been filed and there has been no change in the applicable building code negatively affecting the performance of this product.

TERMINATION of this NOA will occur after the expiration date or if there has been a revision or change in the materials, use, and/or manufacture of the product or process. Misuse of this NOA as an endorsement of any product, for sales, advertising or any other purposes shall automatically terminate this NOA. Failure to comply with any section of this NOA shall be cause for termination and removal of NOA.

ADVERTISEMENT: The NOA number preceded by the words Miami-Dade County, Florida, and followed by the expiration date may be displayed in advertising literature. If any portion of the NOA is displayed, then it shall be done in its entirety.

INSPECTION: A copy of this entire NOA shall be provided to the user by the manufacturer or its distributors and shall be available for inspection at the job site at the request of the Building Official.

This renews NOA#06-0517.08 and consists of pages 1 through 3
The submitted documentation was reviewed by Alex Tigera.

MIAMI-DADE COUNTY APPROVED

NOA No.: 11-0425.09
Expiration Date: 08/17/16
Approval Date: 06/23/11

ROOFING COMPONENT APPROVAL:

Category: Roofing
Sub Categories: Roofing Fasteners
Materials: Steel

SCOPE

This approves "**Stormguard Nails**" as manufactured by W.H. Maze Company and described in this Notice of Acceptance.

PRODUCT DESCRIPTION

Product	Dimensions	Test Specifications	Product Description
Stormguard Nails	Various Diameters 1.25" to 4" Length	TAS 114	A double hot dipped galvanized Ringshank Nail for use as a fastener in approved assemblies and components.

EVIDENCE SUBMITTED:

Test Agency	Test Identifier	Test Name/Report	Date
Testing Evaluation Laboratories	ASTM G 85 Annex 5	TEL 06-0512-1	05/12/06

MANUFACTURING LOCATION:

1. Peru, Illinois

APPROVED APPLICATIONS

Trade name: **Stormguard Nails**

Application: See specific Roof Assembly Product Control Notice of Acceptance for fastener density and Approved attachment patterns.

Deck: Wood

DETAIL DRAWING

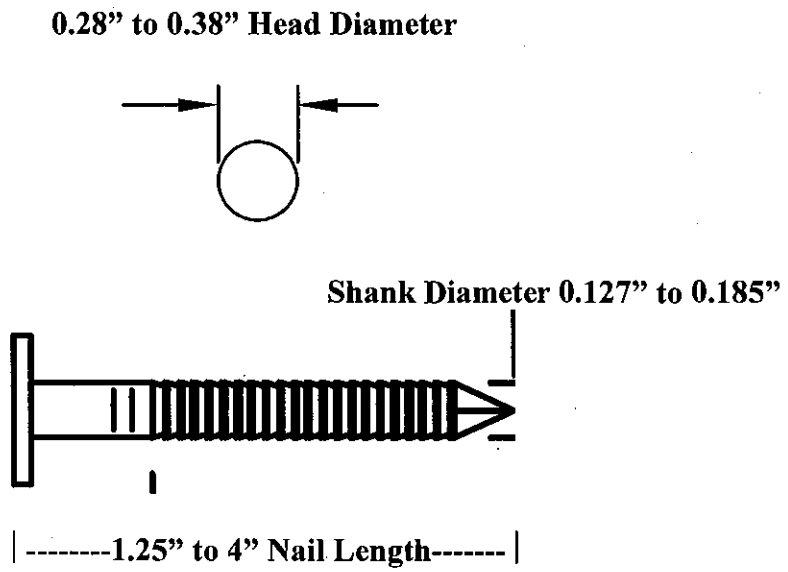

END OF THIS ACCEPTANCE