MIAMI-DADE COUNTY
BUILDING AND NEIGHBORHOOD COMPLIANCE DEPARTMENT (BNC)
BOARD AND CODE ADMINISTRATION DIVISION

MIAMI-DADE COUNTY
PRODUCT CONTROL SECTION
11805 SW 26 Street, Room 208
Miami, Florida 33175-2474
T (786) 315-2590 F (786) 315-2599
www.miamidade.gov/building/

NOTICE OF ACCEPTANCE (NOA)

Behar Windows, LLC
4006 N. 30th Avenue
Hollywood, FL 33020

SCOPE:

This NOA is being issued under the applicable rules and regulations governing the use of construction materials. The documentation submitted has been reviewed and accepted by Miami-Dade County BNC - Product Control Section to be used in Miami Dade County and other areas where allowed by the Authority Having Jurisdiction (AHJ).

This NOA shall not be valid after the expiration date stated below. The Miami-Dade County Product Control Section (In Miami Dade County) and/or the AHJ (in areas other than Miami Dade County) reserve the right to have this product or material tested for quality assurance purposes. If this product or material fails to perform in the accepted manner, the manufacturer will incur the expense of such testing and the AHJ may immediately revoke, modify, or suspend the use of such product or material within their jurisdiction. BNC reserves the right to revoke this acceptance, if it is determined by Miami-Dade County Product Control Section that this product or material fails to meet the requirements of the applicable building code.

This product is approved as described herein, and has been designed to comply with the Florida Building Code, including the High Velocity Hurricane Zone.

DESCRIPTION: Series "NOAH 3000" Aluminum Window Wall System – L.M.I.

APPROVAL DOCUMENT: Drawing No. **BW-3000F**, titled "Series NOAH 3000 Fixed Window/Window Wall System (LMI)" sheets 1 through 11 of 11, dated 04/18/11, prepared by Stanton Engineering, Inc. Structural Engineering Services, signed and sealed by Christopher Stanton, P.E., bearing the Miami-Dade County Product Control Approval stamp with the Notice of Acceptance number and approval date by the Miami-Dade County Product Control Section.

MISSILE IMPACT RATING: Large and Small Missile Impact Resistant

LABELING: Each unit shall bear a permanent label with the manufacturer's name or logo, city, state, model/series, and following statement: "Miami-Dade County Product Control Approved", unless otherwise noted herein.

RENEWAL of this NOA shall be considered after a renewal application has been filed and there has been no change in the applicable building code negatively affecting the performance of this product.

TERMINATION of this NOA will occur after the expiration date or if there has been a revision or change in the materials, use, and/or manufacture of the product or process. Misuse of this NOA as an endorsement of any product, for sales, advertising or any other purposes shall automatically terminate this NOA. Failure to comply with any section of this NOA shall be cause for termination and removal of NOA.

ADVERTISEMENT: The NOA number preceded by the words Miami-Dade County, Florida, and followed by the expiration date may be displayed in advertising literature. If any portion of the NOA is displayed, then it shall be done in its entirety.

INSPECTION: A copy of this entire NOA shall be provided to the user by the manufacturer or its distributors and shall be available for inspection at the job site at the request of the Building Official.

This NOA consists of this page 1 and evidence pages E-1 and E-2, as well as approval document mentioned above.

The submitted documentation was reviewed by **Manuel Perez, P.E.**

MIAMI-DADE COUNTY APPROVED

NOA No. 11-0427.01
Expiration Date: August 11, 2016
Approval Date: August 11, 2011

NOTICE OF ACCEPTANCE: EVIDENCE SUBMITTED

A. DRAWINGS

1. Manufacturer's die drawings and sections.
2. Drawing No. **BW-3000F**, titled "Series NOAH 3000 Fixed Window/Window Wall System (L.M.I.)" Sheets 1 through 11 of 11, dated 04/18/11, prepared by Stanton Engineering, Inc. – Structural Engineering Services, signed and sealed by Christopher Stanton, P.E.

B. TESTS

1. Test reports on: 1) Air Infiltration Test, per FBC, TAS 202-94
   2) Uniform Static Air Pressure Test, Loading per FBC TAS 202-94
   3) Water Resistance Test, per FBC, TAS 202-94
   4) Large Missile Impact Test per FBC, TAS 201-94
   5) Cyclic Wind Pressure Loading per FBC, TAS 203-94

   along with marked-up drawings and installation diagram of aluminum fixed window, prepared by American Test Lab of South Florida, Test Report No. **ATLSF-1213.01-10**, dated 02/01/11, signed and sealed by Julio E. Gonzalez, P.E.
2. Test reports on: 1) Air Infiltration Test, per FBC, TAS 202-94
   2) Uniform Static Air Pressure Test, Loading per FBC TAS 202-94
   3) Water Resistance Test, per FBC, TAS 202-94
   4) Large Missile Impact Test per FBC, TAS 201-94
   5) Cyclic Wind Pressure Loading per FBC, TAS 203-94

   along with marked-up drawings and installation diagram of aluminum fixed window, prepared by American Test Lab of South Florida, Test Report No. **ATLSF-0908.01-10,** dated 10/06/10, signed and sealed by Julio E. Gonzalez, P.E.

C. CALCULATIONS:

1. Anchor verification calculations and structural analysis, complying with FBC-2007, prepared by Stanton Engineering, Inc, dated 01/28/11 and revised on 07/14/11, signed and sealed by Christopher Stanton, P.E.
2. Glazing complies with ASTM E1300-04.

D. QUALITY ASSURANCE

1. Miami-Dade Building and Neighborhood Compliance Department (BNC).

E. MATERIAL CERTIFICATIONS

1. Notice of Acceptance No. **10–0413.04** issued to **E.I. DuPont DeNemours & Co.**, Inc. for their "**DuPont Sentry Glass® Interlayer**" dated 05/26/10, expiring on 01/14/12.

Manuel Perez

Manuel Perez, P.E.
Product Control Examiner
NOA No. 11-0427.01
Expiration Date: August 11, 2016
Approval Date: August 11, 2011

NOTICE OF ACCEPTANCE: EVIDENCE SUBMITTED

F. STATEMENTS

1. Statement letter of conformance, dated January 28, 2011, signed and sealed by Christopher Stanton, P.E.
2. Statement letter of no financial interest, dated January 28, 2011, signed and sealed by Christopher Stanton, P.E.
3. Laboratory compliance letter for Test Report No. **ATLSF-1213.01-10**, issued by American Test Lab of South Florida, dated 03/010/11, signed and sealed by Julio E. Gonzalez, P.E.
4. Laboratory compliance letter for Test Report No. **ATLSF-0908.01-10**, issued by American Test Lab of South Florida, dated 10/06/10, signed and sealed by Julio E. Gonzalez, P.E.

G. OTHERS

1. None.

Manuel Perez, PE.
Product Control Examiner
NOA No. 11-0427.01
Expiration Date: August 11, 2016
Approval Date: August 11, 2011

BEHAR WINDOW SERIES NOAH 3000 WINDOW WALL

TYPICAL ELEVATIONS

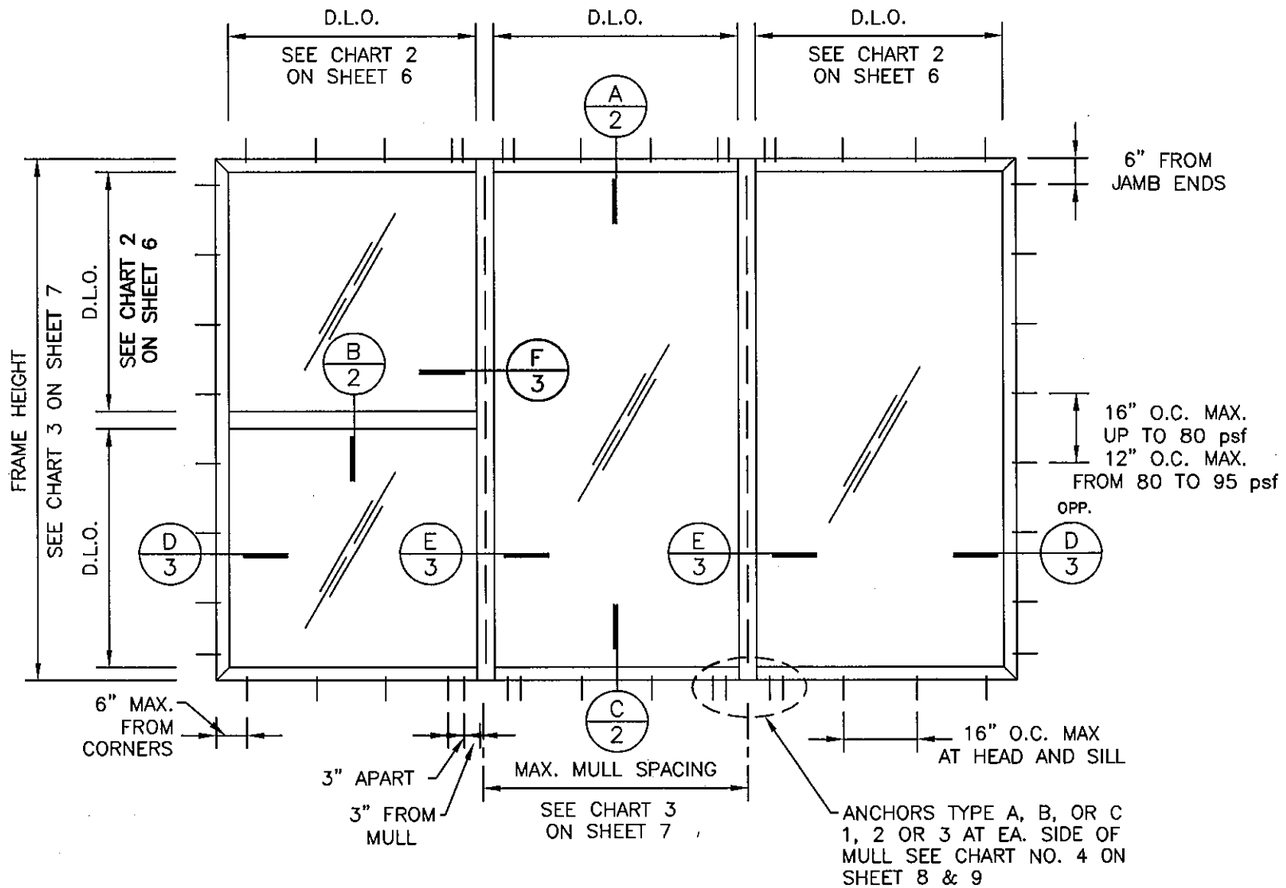

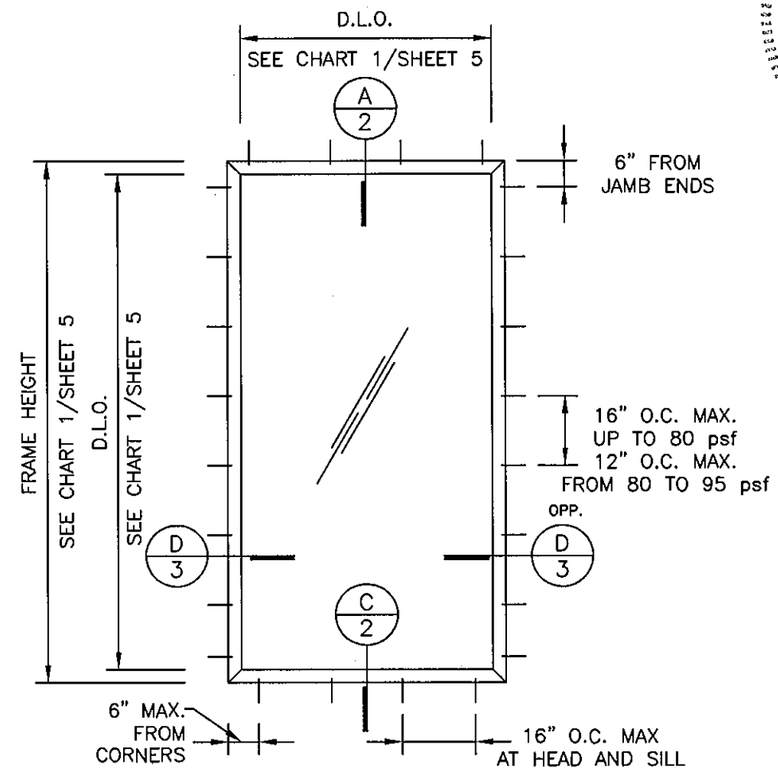

SERIES NOAH 3000 SYSTEM

THIS SYSTEM IS RATED FOR LARGE MISSILE IMPACT. SHUTTERS ARE NOT REQUIRED.

CODE REQUIREMENTS FOR SAFEGUARDS MUST BE OBSERVED.

THIS PRODUCT HAS BEEN DESIGNED AND TESTED TO COMPLY WITH THE REQUIREMENTS OF THE FLORIDA BUILDING CODE 2007 EDITION INCLUDING HIGH VELOCITY HURRICANE ZONE.

WOOD BUCKS, BY OTHERS, MUST BE ANCHORED PROPERLY TO TRANSFER LOADS TO THE STRUCTURE.

ANCHORS SHALL BE AS LISTED AND SHOWN ON THE DETAILS. ANCHOR EMBEDMENT TO BASE MATERIAL SHALL BE BEYOND WALL DRESSING OR STUCCO.

ANCHORING OR LOADING CONDITIONS NOT SHOWN IN THESE DETAILS ARE NOT PART OF THIS APPROVAL.

A 33% INCREASE IN ALLOWABLE STRESS IS NOT USED IN THE DESIGN OF THIS SYSTEM.

ALL STEEL IN CONTACT WITH ALUMINUM TO BE PAINTED OR PLATED.

INSTRUCTIONS:

USE CHARTS AS FOLLOWS.

STEP 1: DETERMINE DESIGN WIND LOAD REQUIREMENTS BASED ON WIND VELOCITY, BLDG. HEIGHT, WIND ZONE USING APPLICABLE ASCE 7 STANDARD.

STEP 2: SEE CHART NO. 1 ON SHEET 5 AND CHART NO. 2 ON SHEET 6 FOR DESIGN LOAD CAPACITY OF DESIRED GLASS SIZE BASED ON FRAME CONFIGURATION AND APPLICABLE WIND DURATION. THE CAPACITY SHOULD EXCEED THE REQUIRED DESIGN LOAD.

STEP 3: CHECK MULLION CAPACITY FOR GIVEN SPACING AND HEIGHT USING CHART NO. 3 ON SHEET 7. THE CAPACITY SHOULD EXCEED THE REQUIRED DESIGN LOAD.

STEP 4: USING CHART NO. 4 ON SHEET 8 & 9, SELECT ANCHOR OPTION WITH DESIGN RATING THAT EXCEEDS THE REQUIRED DESIGN LOAD SPECIFIED IN STEP 1 ABOVE.

STEP 5: THE LOWEST VALUE RESULTING FROM STEPS 2, 3 AND 4 SHALL APPLY TO ENTIRE SYSTEM.

NO.	DATE		REVISIONS
1			
2			
3			
4			
5			

MIAMI-DADE COUNTY USE ONLY

Approved as complying with the Florida Building Code
Date AUG. 11, 2011
NOA# 11-0427.01
Miami Dade Product Control
By Manuel Pera

SEAL: CHRISTOPHER STANTON LICENSE No 69316 STATE OF FLORIDA PROFESSIONAL ENGINEER
AUG 3 2011
CHRISTOPHER STANTON, P.E. FL.P.E. # 69316

STANTON ENGINEERING, INC.
STRUCTURAL ENGINEERING SERVICES
2701 NW BOCA RATON BLVD. SUITE 115
BOCA RATON, FL 33431
TEL: (561) 393-1003 FAX: (561) 393-1008

SERIES NOAH 3000 FIXED WINDOW / WINDOW WALL SYSTEM (L.M.I.)

Behar Windows LLC
4006 N. 30th Ave.
Hollywood, Fl. 33020
954-381-5560

SCALE: NOTED
DATE: 4/18/11
DRAWN BY: DGI
CHECKED BY: C.S.

BW-3000 F
DRAWING NO.

SHEET NO.
1 of 11

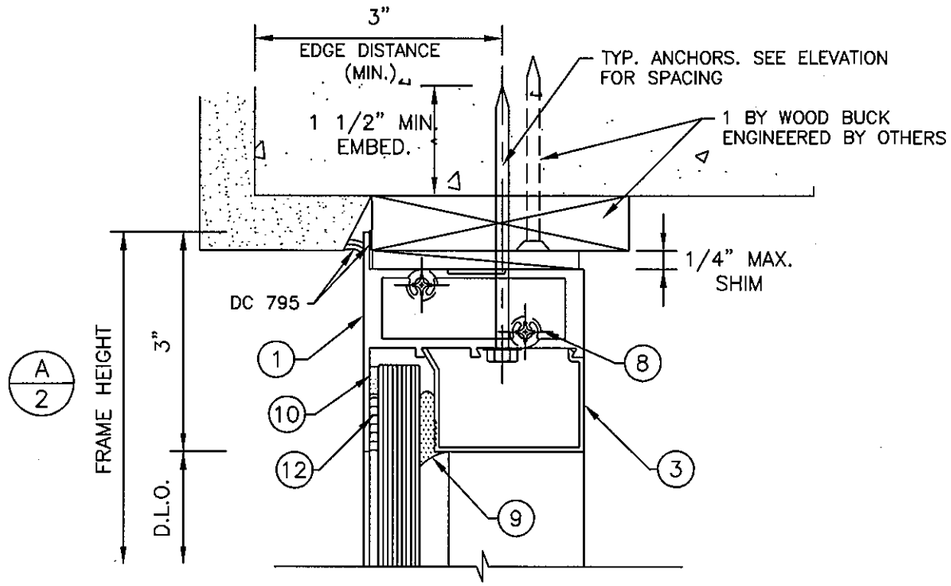

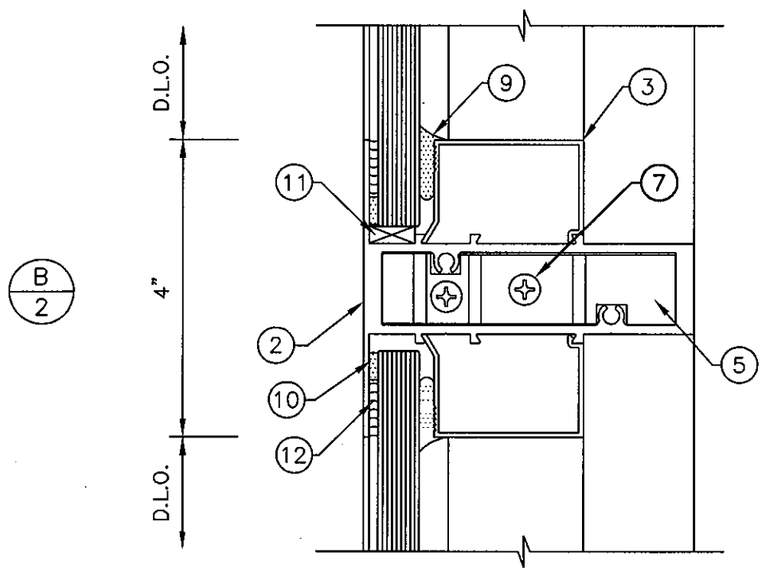

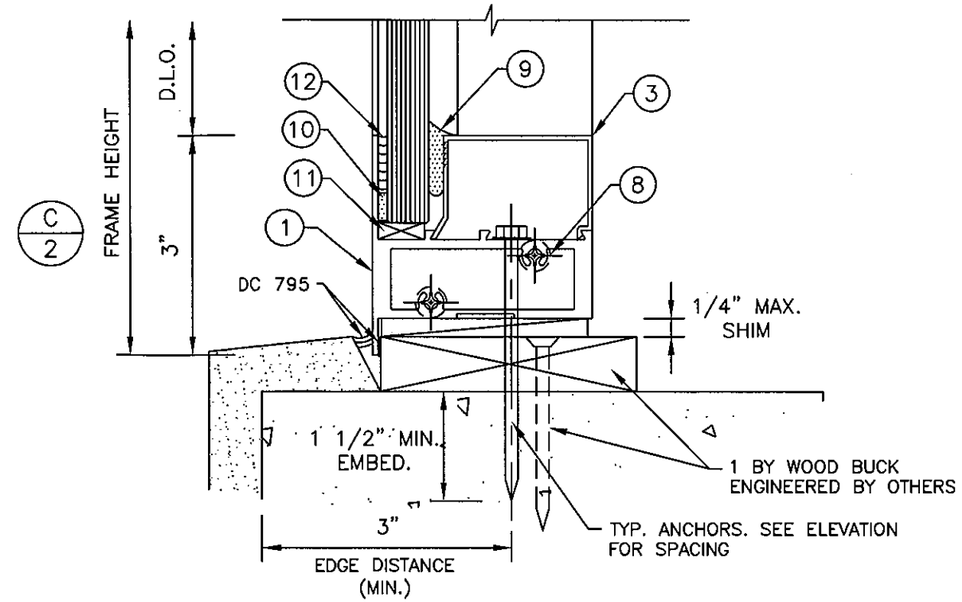

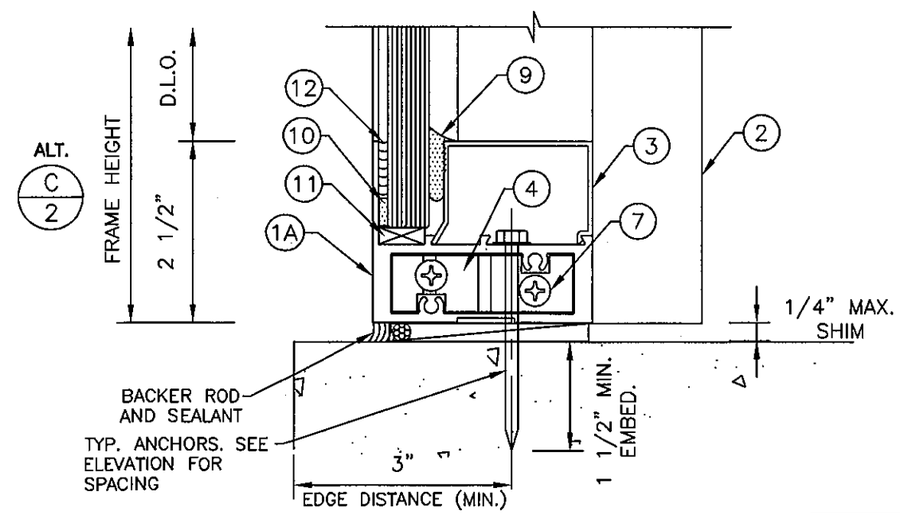

ALTERNATE INSTALLATION

WITH FLANGE REMOVED
(HEAD, SILL AND JAMB)

NO.	DATE		REVISIONS
1			
2			
3			
4			
5			

MIAMI-DADE COUNTY USE ONLY

Approved as complying with the Florida Building Code
Date AUG. 11, 2011
NOA# 11-0427.01
Miami Dade Product Control
By Manuel Perez

SEAL
CHRISTOPHER STANTON
LICENSE No 69316
AUG 3 2011
STATE OF FLORIDA
PROFESSIONAL ENGINEER
CHRISTOPHER STANTON, P.E.
FLA P.E. # 69316

STANTON ENGINEERING, INC.
STRUCTURAL ENGINEERING SERVICES
2701 NW BOCA RATON BLVD. SUITE 115
BOCA RATON, FL 33431
TEL: (561) 393-1003 FAX: (561) 393-1008

SERIES NOAH 3000 FIXED WINDOW / WINDOW WALL SYSTEM (L.M.I.)

Behar Windows LLC
4006 N. 30th Ave.
Hollywood, Fl. 33020
954-381-5560

SCALE:	NOTED
DATE:	4/18/11
DRAWN BY:	DGI
CHECKED BY:	C.S.

BW-3000 F
DRAWING NO.

SHEET NO.
2 of 11

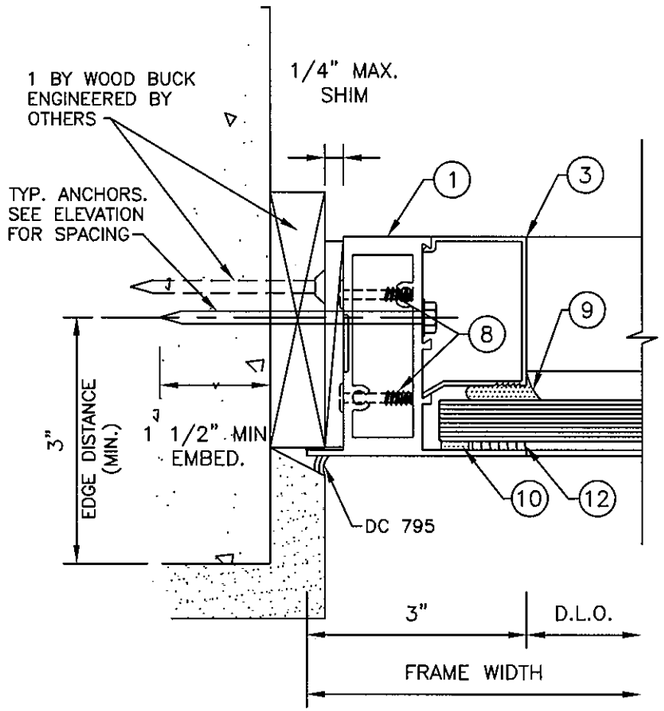

D/3

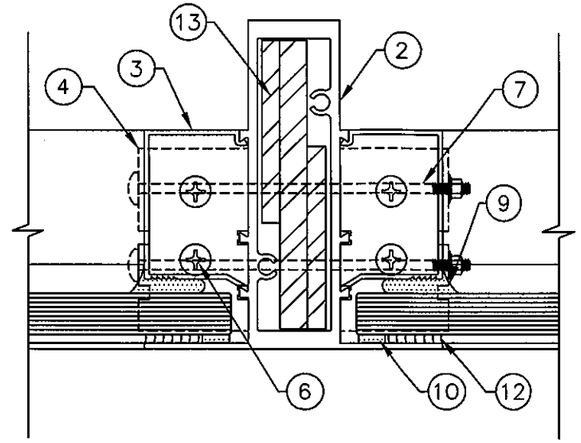

E/3

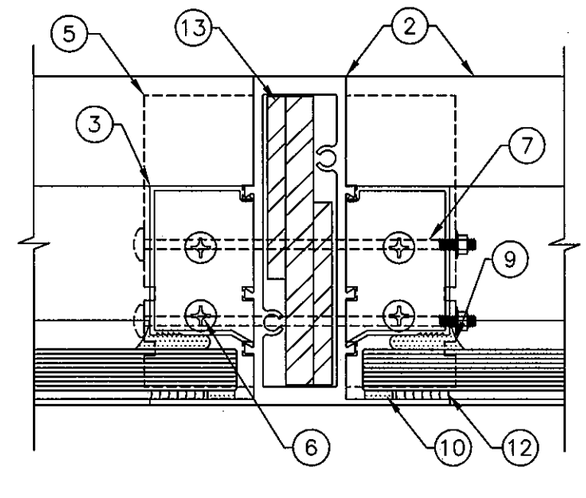

F/3

NO.	DATE		REVISIONS
1			
2			
3			
4			
5			

MIAMI-DADE COUNTY USE ONLY

Approved as complying with the Florida Building Code
Date AUG. 11, 2011
NOA# 11-0427.01
Miami Dade Product Control
By Manuel Perez

SEAL
CHRISTOPHER STANTON
LICENSE No 69316
AUG 03 2011
STATE OF FLORIDA
PROFESSIONAL ENGINEER
CHRISTOPHER STANTON, P.E.
FLA. P.E. # 69316

STANTON ENGINEERING, INC.
STRUCTURAL ENGINEERING SERVICES
2701 NW BOCA RATON BLVD. SUITE 115
BOCA RATON, FL 33431
TEL: (561) 393-1003 FAX: (561) 393-1008

SERIES NOAH 3000 FIXED WINDOW / WINDOW WALL SYSTEM (L.M.I.)

Behar Windows LLC
4006 N. 30th Ave.
Hollywood, Fl. 33020
954-381-5560

SCALE: NOTED
DATE: 4/18/11
DRAWN BY: DGI
CHECKED BY: C.S.

BW-3000 F
DRAWING NO.

SHEET NO.
3 of 11

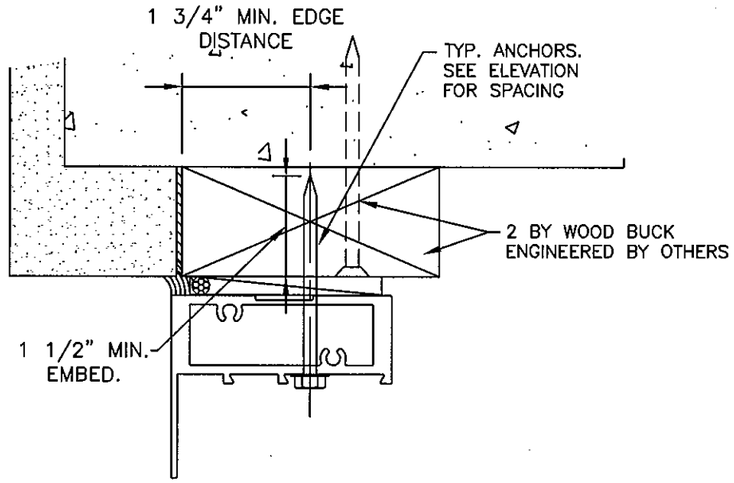

ANCHOR TYPE – C

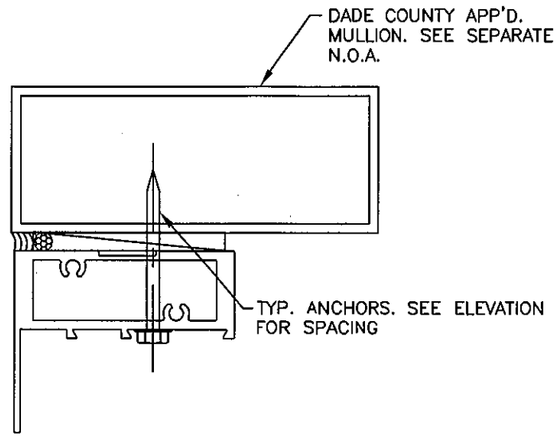

ANCHOR TYPE – B

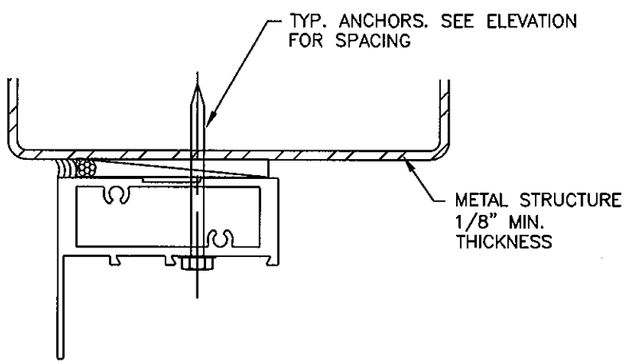

ANCHOR TYPE – B

WOOD BUCKS NOT BY BEHAR WINDOWS MUST SUPPORT LOADS IMPOSED BY GLAZING SYSTEM AND TRANSFER THEM TO THE BUILDING STRUCTURE.

TYPICAL ANCHORS:

SEE ELEVATIONS FOR SPACING

TYPE "A"–1/4" ULTRACONS BY ELCO

THRU 1BY WOOD OR 2BY WOOD BUCKS INTO 3000 PSI MIN. CONC. OR C–90 GROUT FILLED BLOCK. 1 1/2" MIN. EMBED. INTO CONC. OR MASONRY

DIRECTLY INTO 3000 PSI MIN. CONCRETE 1 1/2" MIN. EMBED. INTO CONC.

TYPE "B"–#14 SMS OR 1/4" SELF DRILLING SCREWS

INTO METAL STRUCTURES (STEEL OR ALUM. 1/8" MIN. THICK.)

STEEL: Fy – 36 KSI MIN.
ALUMINUM: 6063–T5 MIN.
(STEEL IN CONTACT WITH ALUM. TO BE PLATED OR PAINTED)

TYPE "C"–1/4" ULTRACONS BY ELCO

INTO 2BY WOOD BUCKS OR WOOD SUBSTRAIGHTS 1 1/2" MIN. PENETRATION INTO #2 SYP

TYPICAL EDGE DISTANCE

INTO CONC. OR MASONRY = 3" MIN.
INTO WOOD STRUCTURE = 1 3/4" MIN.
INTO METAL STRUCTURE = 3/8" MIN.

NO.	DATE		REVISIONS
1			
2			
3			
4			
5			

MIAMI-DADE COUNTY USE ONLY

Approved as complying with the Florida Building Code
Date AUG. 11, 2011
NOA# 11-0427.01
Miami Dade Product Control
By Manuel Perez

SEAL: CHRISTOPHER STANTON LICENSE 69316 STATE OF FLORIDA PROFESSIONAL ENGINEER
AUG 03 2011
CHRISTOPHER STANTON, P.E.
FLA P.E.# 69316

STANTON ENGINEERING, INC.
STRUCTURAL ENGINEERING SERVICES
2701 NW BOCA RATON BLVD. SUITE 115
BOCA RATON, FL 33431
TEL: (561) 393-1003 FAX: (561) 393-1008

SERIES NOAH 3000 FIXED WINDOW / WINDOW WALL SYSTEM (L.M.I.)

Behar Windows LLC
4006 N. 30th Ave.
Hollywood, Fl. 33020
954-381-5560

SCALE: NOTED
DATE: 4/18/11
DRAWN BY: DGI
CHECKED BY: C.S.

BW-3000 F
DRAWING NO.

SHEET NO.
4 of 11

CHART NO. 1 GLASS CAPACITY CHART FOR SINGLE OPENING WINDOWS PSF		
NOMINAL DIMS.		SINGLE FIXED WINDOW
W1	W2	EXT. (+) INT. (−)
26 1/2"	26"	100.0
32"		100.0
37"		100.0
42"		100.0
48"		100.0
53 1/8"		100.0
26 1/2"	38 3/8"	100.0
32"		100.0
37"		100.0
42"		100.0
48"		100.0
53 1/8"		100.0
26 1/2"	50 5/8"	100.0
32"		100.0
37"		100.0
42"		100.0
48"		100.0
53 1/8"		100.0
26 1/2"	63"	100.0
32"		100.0
37"		100.0
42"		100.0
48"		100.0
53 1/8"		100.0
26 1/2"	76"	100.0
32"		100.0
37"		100.0
42"		100.0
48"		100.0
53 1/8"		100.0

CHART NO. 1 GLASS CAPACITY CHART FOR SINGLE OPENING WINDOWS PSF		
NOMINAL DIMS.		SINGLE FIXED WINDOW
W1	W2	EXT. (+) INT. (−)
24"	48"	100.0
30"		100.0
36"		100.0
42"		100.0
48"		100.0
54"		100.0
60"		100.0
24"	60"	100.0
30"		100.0
36"		100.0
42"		100.0
48"		100.0
54"		100.0
60"		100.0
24"	72"	100.0
30"		100.0
36"		100.0
42"		100.0
48"		100.0
54"		100.0
60"		100.0
24"	84"	100.0
30"		100.0
36"		100.0
42"		100.0
48"		100.0
54"		100.0
60"		100.0

CHART NO. 1 GLASS CAPACITY CHART FOR SINGLE OPENING WINDOWS PSF		
NOMINAL DIMS.		SINGLE FIXED WINDOW
W1	W2	EXT. (+) INT. (−)
24"	96"	100.0
30"		100.0
36"		100.0
42"		100.0
48"		100.0
54"		100.0
60"		100.0
24"	108"	100.0
30"		100.0
36"		100.0
42"		100.0
48"		100.0
54"		100.0
60"		100.0
24"	120"	100.0
30"		100.0
36"		100.0
42"		100.0
48"		100.0
54"		100.0
60"		100.0

TYPICAL ELEVATION

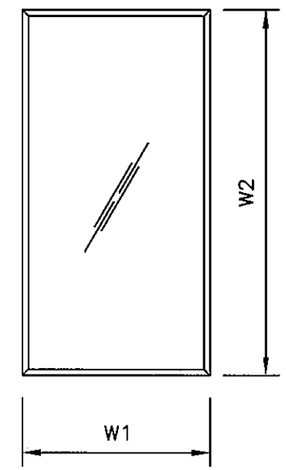

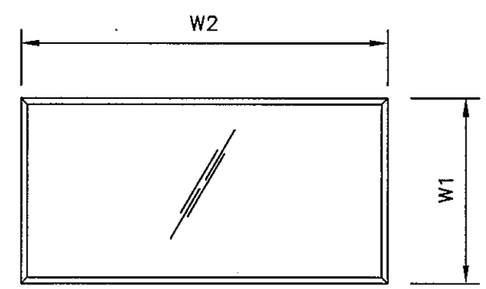

NOTE:

W1 = SHORT SIDE
W2 = LONG SIDE
WINDOW MAY BE INSTALLED VERTICALLY OR HORIZONTALLY

FORMULA FOR D.L.O.

FRAME WITH FLANGE

D.L.O. = [(W1)−5"] X [(W2)−5"]

FRAME WITHOUT FLANGE

D.L.O. = [(W1)−4 1/2"] X [(W2)−4 1/2"]

NO.	DATE		REVISIONS
1			
2			
3			
4			
5			

MIAMI-DADE COUNTY USE ONLY

Approved as complying with the Florida Building Code
Date AUG. 11, 2011
NOA# 11-0427.01
Miami Dade Product Control
By Manuel Perez

CHRISTOPHER STANTON LICENSE No 69316 STATE OF FLORIDA PROFESSIONAL ENGINEER
SEAL
AUG 3 2011
CHRISTOPHER STANTON, P.E.
FLA.P.E.#69316

STANTON ENGINEERING, INC.
STRUCTURAL ENGINEERING SERVICES
2701 NW BOCA RATON BLVD. SUITE 115
BOCA RATON, FL 33431
TEL: (561) 393-1003 FAX: (561) 393-1008

SERIES NOAH 3000 FIXED WINDOW / WINDOW WALL SYSTEM (L.M.I.)

Behar Windows LLC
4006 N. 30th Ave.
Hollywood, Fl. 33020
954-381-5560

SCALE: NOTED
DATE: 4/18/11
DRAWN BY: DGI
CHECKED BY: C.S.

BW-3000 F
DRAWING NO.

SHEET NO.
5 of 11

CHART NO. 2
GLASS CAPACITY CHART FOR STOREFRONT / WINDOW WALL CONFIGURATIONS – PSF

NOMINAL DIMS.		GLASS TYPE "A"
W1/W2	H/H1	EXT. (+) INT. (–)
36"	87"	100.0
39"		100.0
42"		100.0
45"		100.0
48"		100.0
51"		100.0
54"		100.0
57"		100.0
60"		100.0
63"		100.0
66"		100.0
69"		100.0
72"		100.0
36"	90"	100.0
39"		100.0
42"		100.0
45"		100.0
48"		100.0
51"		100.0
54"		100.0
57"		100.0
60"		100.0
63"		100.0
66"		100.0
69"		100.0
72"		100.0

CHART NO. 2
GLASS CAPACITY CHART FOR STOREFRONT / WINDOW WALL CONFIGURATIONS – PSF

NOMINAL DIMS.		GLASS TYPE "A"
W1/W2	H/H1	EXT. (+) INT. (–)
36"	93"	100.0
39"		100.0
42"		100.0
45"		100.0
48"		100.0
51"		100.0
54"		100.0
57"		100.0
60"		100.0
63"		100.0
66"		100.0
69"		100.0
72"		100.0
36"	99"	100.0
39"		100.0
42"		100.0
45"		100.0
48"		100.0
51"		100.0
54"		100.0
57"		100.0
60"		100.0
63"		100.0
66"		100.0
36"	102"	100.0
39"		100.0
42"		100.0
45"		100.0
48"		100.0
51"		100.0
54"		100.0
57"		100.0
60"		100.0
63"		100.0
65"		100.0

CHART NO. 2
GLASS CAPACITY CHART FOR STOREFRONT / WINDOW WALL CONFIGURATIONS – PSF

NOMINAL DIMS.		GLASS TYPE "A"
W1/W2	H/H1	EXT. (+) INT. (–)
36"	105"	100.0
39"		100.0
42"		100.0
45"		100.0
48"		100.0
51"		100.0
54"		100.0
57"		100.0
60"		100.0
63"		100.0
36"	108"	100.0
39"		100.0
42"		100.0
45"		100.0
48"		100.0
51"		100.0
54"		100.0
57"		100.0
60"		100.0
62"		100.0
36"	111"	100.0
39"		100.0
42"		100.0
45"		100.0
48"		100.0
51"		100.0
54"		100.0
57"		100.0
60"		100.0

CHART NO. 2
GLASS CAPACITY CHART FOR STOREFRONT / WINDOW WALL CONFIGURATIONS – PSF

NOMINAL DIMS.		GLASS TYPE "A"
W1/W2	H/H1	EXT. (+) INT. (–)
36"	114"	100.0
39"		100.0
42"		100.0
45"		100.0
48"		100.0
51"		100.0
54"		100.0
58"		100.0
36"	117"	100.0
39"		100.0
42"		100.0
45"		100.0
48"		100.0
51"		100.0
54"		100.0
57"		100.0
36"	120"	100.0
39"		100.0
42"		100.0
45"		100.0
48"		100.0
51"		100.0
55"		100.0

GLASS TYPE "A"

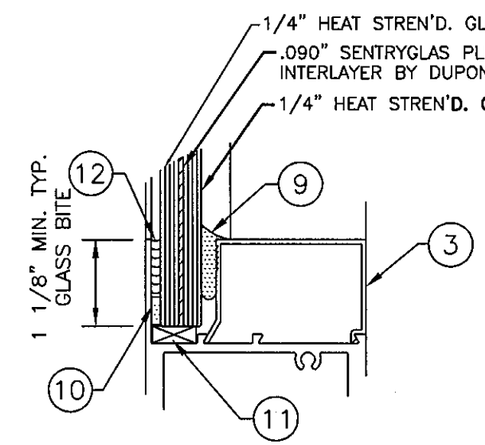

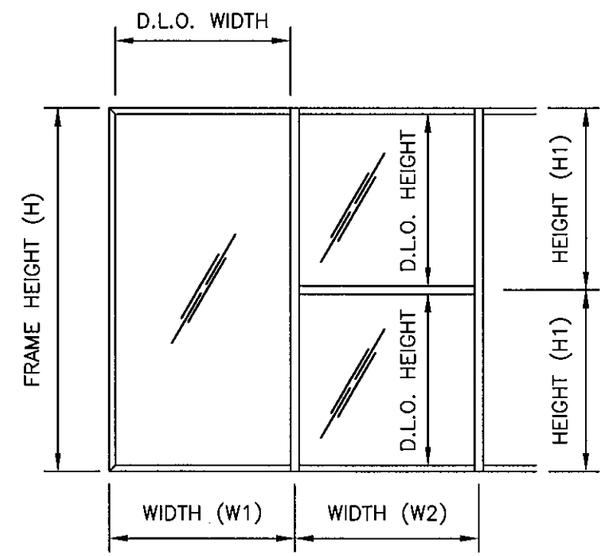

NOTE:
GLASS CHECKED PER ASTM E1300–02 AND TESTING.

FORMULA FOR D.L.O.

FRAME WITH FLANGE

D.L.O. = [(W1)–5"] OR [(W2)–4"] X [(H)–6"] OR [(H1)–5"]

FRAME WITHOUT FLANGE

D.L.O. = [(W1)–4 1/2"] OR [(W2)–4"] X [(H)–5"] OR [(H1)–4 1/2"]

NO.	DATE		REVISIONS
1			
2			
3			
4			
5			

MIAMI-DADE COUNTY USE ONLY

Approved as complying with the Florida Building Code
Date AUG. 11, 2011
NOA# 11-0427.01
Miami Dade Product Control
By Manuel Perez

SEALED STANTON LICENSE No 69316 AUG 03 2011 CHRISTOPHER STANTON, P.E. FLA. P.E. # 69316 STATE OF FLORIDA PROFESSIONAL ENGINEER

STANTON ENGINEERING, INC.
STRUCTURAL ENGINEERING SERVICES
2701 NW BOCA RATON BLVD. SUITE 115
BOCA RATON, FL 33431
TEL: (561) 393-1003 FAX: (561) 393-1008

SERIES NOAH 3000 FIXED WINDOW / WINDOW WALL SYSTEM (L.M.I.)

Behar Windows LLC
4006 N. 30th Ave.
Hollywood, Fl. 33020
954-381-5560

SCALE: NOTED
DATE: 4/18/11
DRAWN BY: DGI
CHECKED BY: C.S.

BW-3000 F
DRAWING NO.

SHEET NO.
6 of 11

CHART NO. 3 MULLION LOAD CAPACITY PSF		
NOMINAL DIMS.		N3002 W/ STEEL
WIDTH (W)	HEIGHT (H)	EXT. (+) INT. (−)
24"	78"	95.0
30"		95.0
36"		95.0
42"		95.0
48"		95.0
54"		95.0
60"		95.0
66"		95.0
72"		95.0
24"	84"	95.0
30"		95.0
36"		95.0
42"		95.0
48"		95.0
54"		95.0
60"		95.0
66"		95.0
72"		95.0
24"	96"	95.0
30"		95.0
36"		95.0
42"		95.0
48"		95.0
54"		95.0
60"		95.0
66"		95.0
72"		95.0

CHART NO. 3 MULLION LOAD CAPACITY PSF		
NOMINAL DIMS.		N3002 W/ STEEL
WIDTH (W)	HEIGHT (H)	EXT. (+) INT. (−)
24"	102"	95.0
30"		95.0
36"		95.0
42"		95.0
48"		95.0
54"		95.0
60"		95.0
66"		95.0
72"		95.0
24"	108"	95.0
30"		95.0
36"		95.0
42"		95.0
48"		95.0
54"		95.0
60"		95.0
66"		93.9
24"	114"	95.0
30"		95.0
36"		95.0
42"		95.0
48"		95.0
54"		95.0
60"		92.7
24"	120"	95.0
30"		95.0
36"		95.0
42"		95.0
48"		95.0
54"		93.0
60"		83.7

TYPICAL ELEVATION

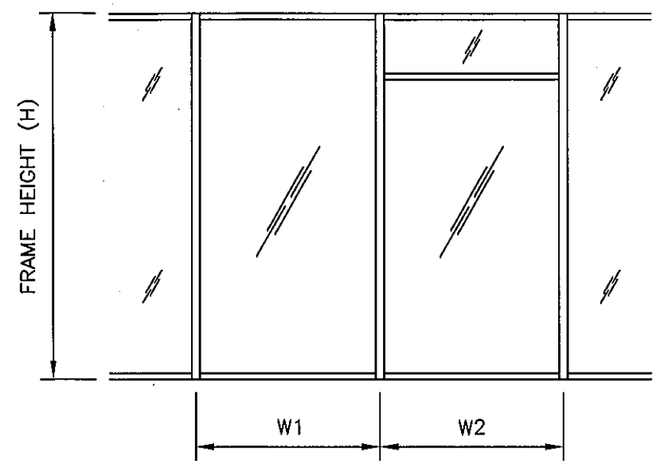

$$\text{WIDTH (W)} = \frac{W1 + W2}{2}$$

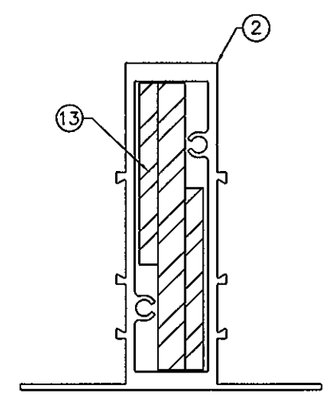

INTERMEDIATE VERTICAL MULLION

N3002 WITH STD. STEEL REINFORCING

	I= X in^4	S= X in^3
ALUMINUM	5.300	2.100
STEEL	3.400	1.700
TOTAL *	15.160	

* Ix ALUM. + Ix STL. X 2.9

NO.	DATE		REVISIONS
1			
2			
3			
4			
5			

MIAMI-DADE COUNTY USE ONLY

Approved as complying with the Florida Building Code
Date AUG. 11, 2011
NOA# 11-0427.01
Miami Dade Product Control
By Manuel Perez

SEAL: CHRISTOPHER STANTON LICENSE 69316 STATE OF FLORIDA PROFESSIONAL ENGINEER
AUG 13 2011
CHRISTOPHER STANTON, P.E.
FL# P.E. # 69316

STANTON ENGINEERING, INC.
STRUCTURAL ENGINEERING SERVICES
2701 NW BOCA RATON BLVD. SUITE 115
BOCA RATON, FL 33431
TEL: (561) 393-1003 FAX: (561) 393-1008

SERIES NOAH 3000 FIXED WINDOW / WINDOW WALL SYSTEM (L.M.I.)

Behar Windows LLC
4006 N. 30th Ave.
Hollywood, Fl. 33020
954-381-5560

SCALE: NOTED
DATE: 4/18/11
DRAWN BY: DGI
CHECKED BY: C.S.

BW-3000 F
DRAWING NO.

SHEET NO.
7 of 11

CHART NO. 4
ANCHOR LOAD CAPACITY – PSF

NOMINAL DIMS.		ANCHOR TYPE		
		"A1"	"A2"	"A3"
WIDTH (W)	HEIGHT (H)	EXT. (+) INT. (–)	EXT. (+) INT. (–)	EXT. (+) INT. (–)
24"	78"	95.0	95.0	95.0
30"		91.0	95.0	95.0
36"		76.0	95.0	95.0
42"		65.0	95.0	95.0
48"		57.0	95.0	95.0
54"		51.0	95.0	95.0
60"		46.0	91.0	95.0
66"		42.0	83.0	95.0
72"		38.0	76.0	95.0
24"	84"	95.0	95.0	95.0
30"		85.0	95.0	95.0
36"		71.0	95.0	95.0
42"		61.0	95.0	95.0
48"		53.0	95.0	95.0
54"		47.0	94.0	95.0
60"		42.0	65.0	95.0
66"		39.0	77.0	95.0
72"		35.0	71.0	95.0
24"	96"	93.0	95.0	95.0
30"		74.0	95.0	95.0
36"		62.0	95.0	95.0
42"		53.0	95.0	95.0
48"		46.0	93.0	95.0
54"		41.0	82.0	95.0
60"		37.0	74.0	95.0
66"		34.0	67.0	95.0
72"		31.0	62.0	93.0

CHART NO. 4
ANCHOR LOAD CAPACITY – PSF

NOMINAL DIMS.		ANCHOR TYPE		
		"A1"	"A2"	"A3"
WIDTH (W)	HEIGHT (H)	EXT. (+) INT. (–)	EXT. (+) INT. (–)	EXT. (+) INT. (–)
24"	108"	82.0	95.0	95.0
30"		66.0	95.0	95.0
36"		55.0	95.0	95.0
42"		47.0	94.0	95.0
48"		41.0	82.0	95.0
54"		37.0	73.0	95.0
60"		33.0	66.0	95.0
66"		30.0	60.0	90.0
72"		27.0	55.0	82.0
24"	114"	78.0	95.0	95.0
30"		62.0	95.0	95.0
36"		52.0	95.0	95.0
42"		45.0	89.0	95.0
48"		39.0	78.0	95.0
54"		35.0	69.0	95.0
60"		31.0	62.0	94.0
66"		28.0	57.0	85.0
72"		26.0	52.0	78.0
24"	120"	74.0	95.0	95.0
30"		59.0	95.0	95.0
36"		49.0	95.0	95.0
42"		42.0	85.0	95.0
48"		37.0	74.0	95.0
54"		33.0	66.0	95.0
60"		30.0	59.0	89.0
66"		27.0	54.0	81.0
72"		25.0	49.0	74.0

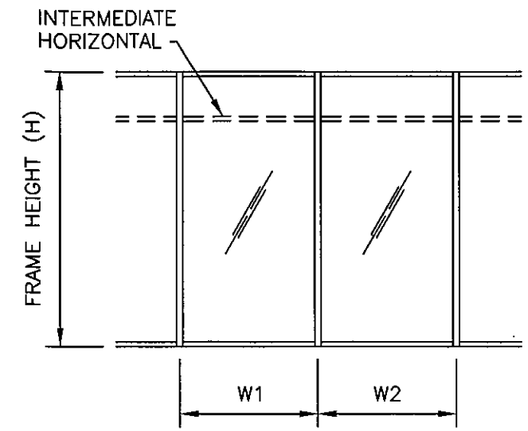

WIDTH (W) = $\frac{W1 + W2}{2}$

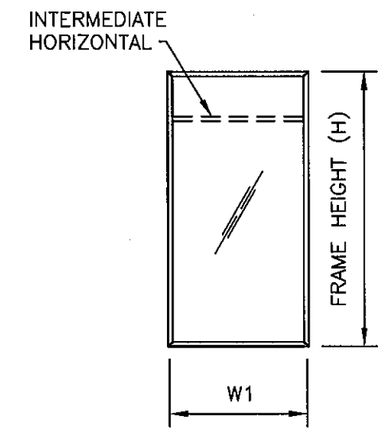

WIDTH (W) = W1 (JAMB)

ANCHOR TYPES: SEE SHEET 4 FOR DESCRIPTION

"A1" – (1) ANCHOR TYPE "A" AT EA. SIDE OF MULLION OR JAMB
"A2" – (2) ANCHORS TYPE "A" AT EA. SIDE OF MULLION OR JAMB
"A3" – (3) ANCHORS TYPE "A" AT EA. SIDE OF MULLION OR JAMB
"B1" – (1) ANCHOR TYPE "B" AT EA. SIDE OF MULLION OR JAMB
"B2" – (2) ANCHORS TYPE "B" AT EA. SIDE OF MULLION OR JAMB
"B3" – (3) ANCHORS TYPE "B" AT EA. SIDE OF MULLION OR JAMB
"C1" – (1) ANCHOR TYPE "C" AT EA. SIDE OF MULLION OR JAMB
"C2" – (2) ANCHORS TYPE "C" AT EA. SIDE OF MULLION OR JAMB
"C3" – (3) ANCHORS TYPE "C" AT EA. SIDE OF MULLION OR JAMB

ALL OTHER ANCHORS TO BE SPACED AS PER ELEVATION

TYPICAL ANCHOR CLUSTERS

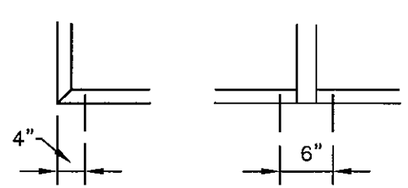

"A1", "B1", "C1"

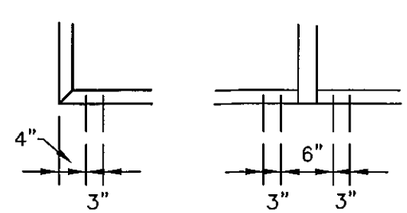

"A2", "B2", "C2"

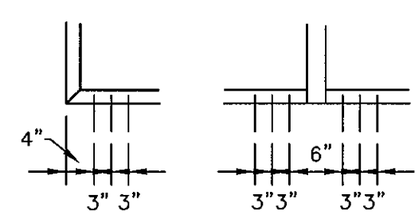

"A3", "B3", "C3"

NO.	DATE		REVISIONS
1			
2			
3			
4			
5			

MIAMI-DADE COUNTY USE ONLY

Approved as complying with the Florida Building Code
Date AUG. 11, 2011
NOA# 11-0427.01
Miami Dade Product Control
By Manuel Perez

SEAL: CHRISTOPHER STANTON LICENSE No. 69316 STATE OF FLORIDA PROFESSIONAL ENGINEER
AUG 03 2011
CHRISTOPHER STANTON, P.E. FLA. P.E. #69316

STANTON ENGINEERING, INC.
STRUCTURAL ENGINEERING SERVICES
2701 NW BOCA RATON BLVD. SUITE 115
BOCA RATON, FL 33431
TEL: (561) 393-1003 FAX: (561) 393-1008

SERIES NOAH 3000 FIXED WINDOW / WINDOW WALL SYSTEM (L.M.I.)

Behar Windows LLC
4006 N. 30th Ave.
Hollywood, Fl. 33020
954-381-5560

SCALE: NOTED
DATE: 4/18/11
DRAWN BY: DGI
CHECKED BY: C.S.

BW-3000 F
DRAWING NO.

SHEET NO.
8 of 11

CHART NO. 4
ANCHOR LOAD CAPACITY – PSF

NOMINAL DIMS.		ANCHOR TYPE		
		"B1"	"B2"	"B3"
WIDTH (W)	HEIGHT (H)	EXT. (+) INT. (–)	EXT. (+) INT. (–)	EXT. (+) INT. (–)
24"	78"	95.0	95.0	95.0
30"		95.0	95.0	95.0
36"		81.0	95.0	95.0
42"		69.0	95.0	95.0
48"		61.0	95.0	95.0
54"		54.0	95.0	95.0
60"		49.0	95.0	95.0
66"		44.0	88.0	95.0
72"		41.0	81.0	95.0
24"	84"	95.0	95.0	95.0
30"		90.0	95.0	95.0
36"		75.0	95.0	95.0
42"		64.0	95.0	95.0
48"		56.0	95.0	95.0
54"		50.0	95.0	95.0
60"		45.0	90.0	95.0
66"		41.0	82.0	95.0
72"		38.0	75.0	95.0
24"	96"	95.0	95.0	95.0
30"		79.0	95.0	95.0
36"		66.0	95.0	95.0
42"		56.0	95.0	95.0
48"		49.0	95.0	95.0
54"		44.0	88.0	95.0
60"		40.0	79.0	95.0
66"		36.0	72.0	95.0
72"		33.0	66.0	95.0

CHART NO. 4
ANCHOR LOAD CAPACITY – PSF

NOMINAL DIMS.		ANCHOR TYPE		
		"B1"	"B2"	"B3"
WIDTH (W)	HEIGHT (H)	EXT. (+) INT. (–)	EXT. (+) INT. (–)	EXT. (+) INT. (–)
24"	108"	88.0	95.0	95.0
30"		70.0	95.0	95.0
36"		59.0	95.0	95.0
42"		50.0	95.0	95.0
48"		44.0	88.0	95.0
54"		39.0	78.0	95.0
60"		35.0	70.0	95.0
66"		32.0	64.0	95.0
72"		29.0	59.0	88.0
24"	114"	83.0	95.0	95.0
30"		67.0	95.0	95.0
36"		55.0	95.0	95.0
42"		48.0	95.0	95.0
48"		42.0	83.0	95.0
54"		37.0	74.0	95.0
60"		33.0	67.0	95.0
66"		30.0	60.0	91.0
72"		28.0	55.0	83.0
24"	120"	79.0	95.0	95.0
30"		63.0	95.0	95.0
36"		53.0	95.0	95.0
42"		45.0	90.0	95.0
48"		40.0	79.0	95.0
54"		35.0	70.0	95.0
60"		32.0	63.0	95.0
66"		29.0	57.0	86.0
72"		26.0	53.0	79.0

CHART NO. 4
ANCHOR LOAD CAPACITY – PSF

NOMINAL DIMS.		ANCHOR TYPE		
		"C1"	"C2"	"C3"
WIDTH (W)	HEIGHT (H)	EXT. (+) INT. (–)	EXT. (+) INT. (–)	EXT. (+) INT. (–)
24"	78"	95.0	95.0	95.0
30"		95.0	95.0	95.0
36"		83.0	95.0	95.0
42"		71.0	95.0	95.0
48"		62.0	95.0	95.0
54"		55.0	95.0	95.0
60"		50.0	95.0	95.0
66"		45.0	90.0	95.0
72"		41.0	83.0	95.0
24"	84"	95.0	95.0	95.0
30"		92.0	95.0	95.0
36"		77.0	95.0	95.0
42"		66.0	95.0	95.0
48"		58.0	95.0	95.0
54"		51.0	95.0	95.0
60"		46.0	92.0	95.0
66"		42.0	84.0	95.0
72"		38.0	77.0	95.0
24"	96"	95.0	95.0	95.0
30"		81.0	95.0	95.0
36"		67.0	95.0	95.0
42"		58.0	95.0	95.0
48"		51.0	95.0	95.0
54"		45.0	90.0	95.0
60"		40.0	81.0	95.0
66"		37.0	73.0	95.0
72"		34.0	67.0	95.0

CHART NO. 4
ANCHOR LOAD CAPACITY – PSF

NOMINAL DIMS.		ANCHOR TYPE		
		"C1"	"C2"	"C3"
WIDTH (W)	HEIGHT (H)	EXT. (+) INT. (–)	EXT. (+) INT. (–)	EXT. (+) INT. (–)
24"	108"	90.0	95.0	95.0
30"		72.0	95.0	95.0
36"		60.0	95.0	95.0
42"		51.0	95.0	95.0
48"		45.0	90.0	95.0
54"		40.0	80.0	95.0
60"		36.0	72.0	95.0
66"		33.0	65.0	95.0
72"		30.0	60.0	90.0
24"	114"	85.0	95.0	95.0
30"		68.0	95.0	95.0
36"		57.0	95.0	95.0
42"		49.0	95.0	95.0
48"		43.0	85.0	95.0
54"		38.0	76.0	95.0
60"		34.0	68.0	95.0
66"		31.0	62.0	93.0
72"		28.0	57.0	85.0
24"	120"	81.0	95.0	95.0
30"		65.0	95.0	95.0
36"		54.0	95.0	95.0
42"		46.0	92.0	95.0
48"		40.0	81.0	95.0
54"		36.0	72.0	95.0
60"		32.0	65.0	95.0
66"		29.0	59.0	88.0
72"		27.0	54.0	81.0

CHRISTOPHER STANTON
LICENSE No 69316
STATE OF FLORIDA
PROFESSIONAL ENGINEER
CHRISTOPHER STANTON, P.E.
FLA. P.E. # 69316

STANTON ENGINEERING, INC.
STRUCTURAL ENGINEERING SERVICES
2701 NW BOCA RATON BLVD. SUITE 115
BOCA RATON, FL 33431
TEL: (561) 393-1003 FAX: (561) 393-1008

SERIES NOAH 3000 FIXED WINDOW / WINDOW WALL SYSTEM (L.M.I.)

Behar Windows LLC
4006 N. 30th Ave.
Hollywood, Fl. 33020
954-381-5560

SCALE:	NOTED
DATE:	4/18/11
DRAWN BY:	DGI
CHECKED BY:	C.S.

BW-3000 F
DRAWING NO.

SHEET NO.
9 of 11

MIAMI-DADE COUNTY USE ONLY

Approved as complying with the Florida Building Code
Date AUG. 11, 2011
NOA# 11-0427.01
Miami Dade Product Control
By Manuel Perez

NO.	DATE		REVISIONS
1			
2			
3			
4			
5			

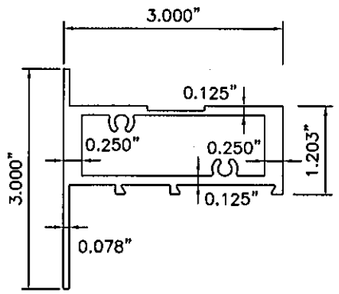

① N3001 – HEAD/SILL/JAMB

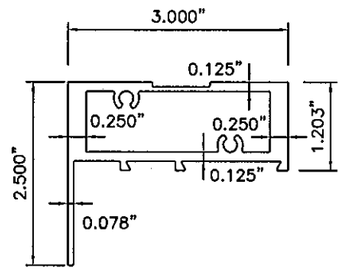

①A N3001 (ALT.) – HEAD/SILL/JAMB

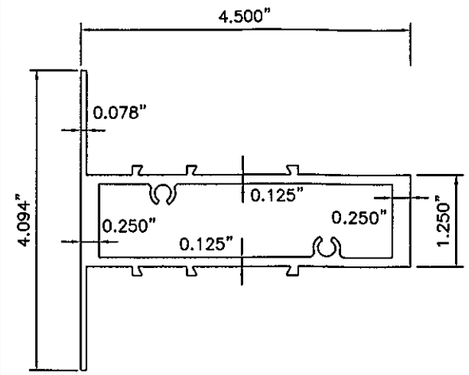

② N3002 – MULLION/INT. HORIZONTAL

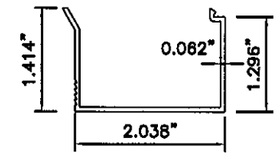

③ N3003 – GLASS STOP

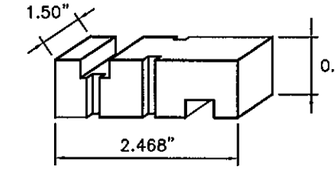

④ B1 – SHEAR BLOCK

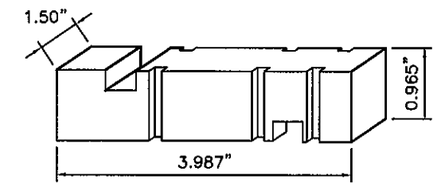

⑤ B2 – SHEAR BLOCK

⑥ SHEAR BLOCK FASTENER

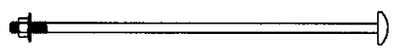

⑦ MULL SHEAR BLOCK ANCHOR

⑧ ASSEMBLY SCREW

⑨ GLAZING GASKET

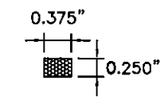

⑩ GLAZING TAPE

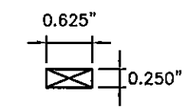

⑪ SETTING BLOCK

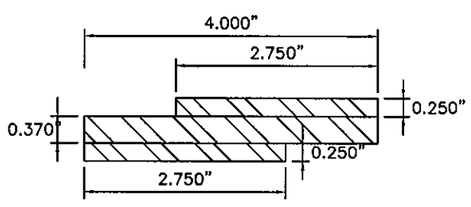

⑬ STEEL REINFORCING

NO.	DATE		REVISIONS
1			
2			
3			
4			
5			

MATERIALS LIST

ITEM NO.	PART NO.	QUANTITY	DESCRIPTION	MATERIAL	MANF./SUPPLIER/REMARKS
①	N3001	AS REQ'D.	HEAD/JAMB/SILL	ALUM. ALLOY 6063–T6	BEHAR WINDOWS
①A	N3001 (ALT.)	AS REQ'D.	EQ. LEG HEAD/JAMB/SILL	ALUM. ALLOY 6063–T6	BEHAR WINDOWS
②	N3002	AS REQ'D.	MULLION/INTERMEDIATE HORIZONTAL	ALUM. ALLOY 6063–T6	BEHAR WINDOWS
③	N3003	AS REQ'D.	GLASS STOP	ALUM. ALLOY 6063–T6	BEHAR WINDOWS
④	B1	AS REQ'D.	HEAD/SILL SHEAR BLOCK	ALUM. ALLOY 6063–T6	BEHAR WINDOWS
⑤	B2	AS REQ'D.	INT. HORIZONTAL SHEAR BLOCK	ALUM. ALLOY 6063–T6	BEHAR WINDOWS
⑥	S1	2/SHEAR BLOCK	#8–32 x 1/2" PH THREAD CUTTING	STAINLESS STEEL	
⑦	S2	2/SHEAR BLOCK	#10–24 x 5" PHPMS W/ HEX NUT	STAINLESS STEEL	
⑧	S3	2/SHEAR BLOCK	#12–24 x 2 1/2" THPMS	STAINLESS STEEL	
⑨	RG12100	AS REQ'D.	GLAZING GASKET	NEOPRENE	C.R. LAURENCE
⑩	V–2108	AS REQ'D.	GLAZING TAPE	3/8" x 1/4" VINYL FOAM	NORTON
⑪	SB584	2/LITE	SETTING BLOCK (9/16" GLASS)	2" x 5/8" x 1/4"	C.R. LAURENCE
⑫	SSG4000AC	AS REQ'D.	GLAZING COMPOUND		GENERAL ELECTRIC
⑬	ST1	AS REQ'D.	STEEL REINFORCING	A36	

MIAMI-DADE COUNTY USE ONLY

Approved as complying with the Florida Building Code
Date AUG. 11, 2011
NOA# 11-0427.01
Miami Dade Product Control
By Manuel Perez

CHRISTOPHER STANTON
LICENSE
SEAL
No 69316
STATE OF FLORIDA
PROFESSIONAL ENGINEER
AUG 12 2011
CHRISTOPHER STANTON, P.E.
(FLA.P.E. # 69316)

STANTON ENGINEERING, INC.
STRUCTURAL ENGINEERING SERVICES
2701 NW BOCA RATON BLVD. SUITE 115
BOCA RATON, FL 33431
TEL: (561) 393-1003 FAX: (561) 393-1008

SERIES NOAH 3000 FIXED WINDOW / WINDOW WALL SYSTEM (L.M.I.)

Behar Windows LLC
4006 N. 30th Ave.
Hollywood, Fl. 33020
954-381-5560

SCALE: NOTED
DATE: 4/18/11
DRAWN BY: DGI
CHECKED BY: C.S.

BW-3000 F
DRAWING NO.

SHEET NO.
10 of 11

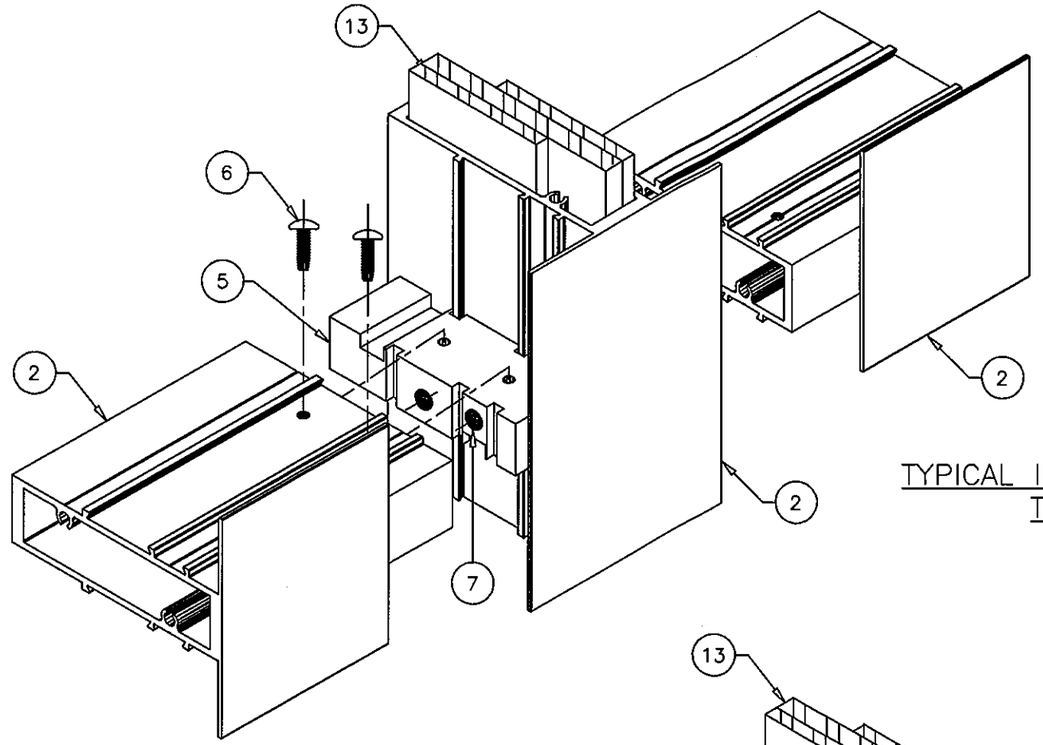

TYPICAL INTERMEDIATE HORIZONTAL TO MULLION DETAIL

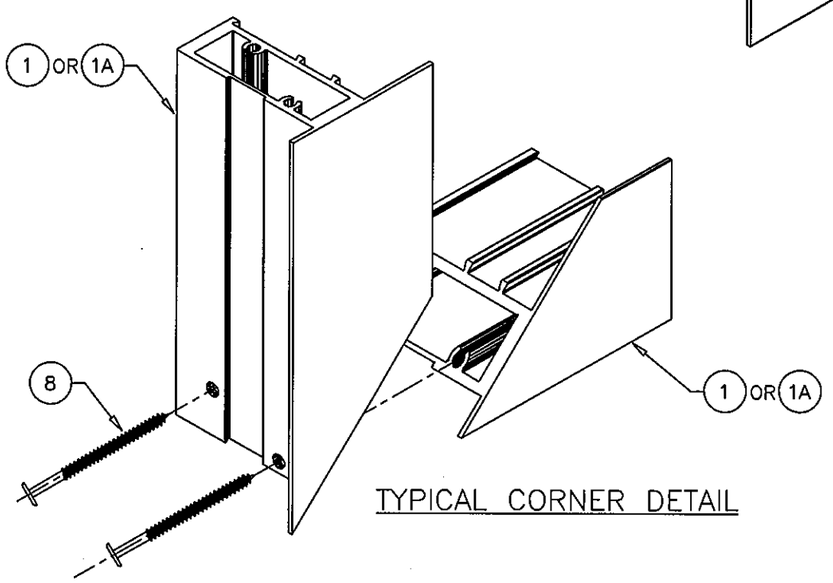

TYPICAL CORNER DETAIL

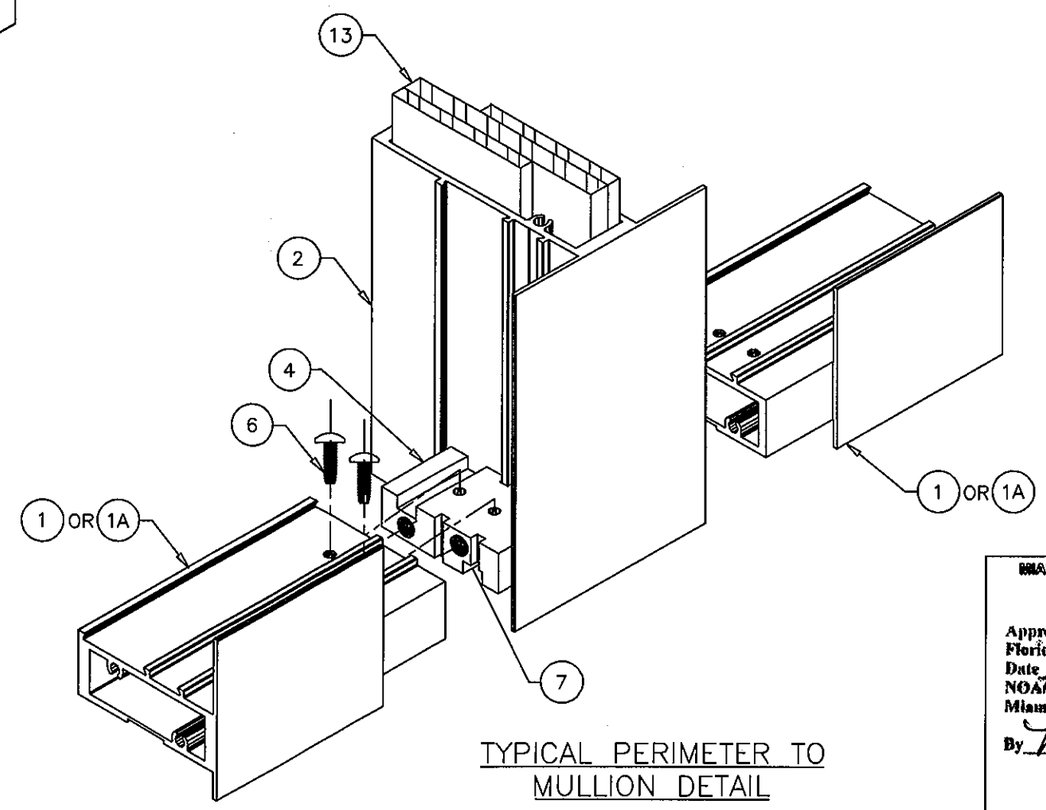

TYPICAL PERIMETER TO MULLION DETAIL

NO.	DATE		REVISIONS
1			
2			
3			
4			
5			

MIAMI-DADE COUNTY USE ONLY

Approved as complying with the Florida Building Code
Date AUG. 11, 2011
NOA# 11-0427.01
Miami Dade Product Control
By Manuel Perez

SEAL: CHRISTOPHER STANTON LICENSE No 69316 STATE OF FLORIDA PROFESSIONAL ENGINEER
AUG 3 2011
CHRISTOPHER STANTON, P.E.
FLA P.E. #69316

STANTON ENGINEERING, INC.
STRUCTURAL ENGINEERING SERVICES
2701 NW BOCA RATON BLVD. SUITE 115
BOCA RATON, FL 33431
TEL: (561) 393-1003 FAX: (561) 393-1008

SERIES NOAH 3000 FIXED WINDOW / WINDOW WALL SYSTEM (L.M.I.)

Behar Windows LLC
4006 N. 30th Ave.
Hollywood, Fl. 33020
954-381-5580

SCALE:	NOTED
DATE:	4/18/11
DRAWN BY:	DGI
CHECKED BY:	C.S.

BW-3000 F
DRAWING NO.

SHEET NO.
11 of 11